ORANGE & ROCKLAND UTILITIES, INC
SVOC NEW OFFICE ADDITION

Tax Map ID 56.52-1-2
390 West Route 59
Village of Spring Valley
Town of Ramapo
Rockland County, New York

ARCHITECTURAL
TECHNICAL SPECIFICATIONS

PREPARED BY

SNS ARCHITECTS & ENGINEERS, P.C.
One Paragon Drive, Suite 250, Montvale, NJ 07645 (201) 573-1767 FAX: (201) 573-0808

April 28, 2025 – Issued for Bidding and Building Department Filing

ARCHITECT

LORIN J. SONENSHINE, AIA
NY License No. 018041

SECTION 00 01 10 – SPECIFICATION MANUAL TABLE OF CONTENTS

DIVISION 00 – CONDITIONS OF THE CONTRACT
SECTION 00 01 10 – Table of Contents 00 01 10–1

DIVISION 01 – GENERAL REQUIREMENTS
SECTION 01 10 00 – Summary 01 10 00–1
SECTION 01 29 00 – Price and Payment Procedures 01 29 00–1
SECTION 01 31 00 – Project Management and Coordination 01 31 00–1
SECTION 01 31 19 – Coordination and Meetings 01 31 19–1
SECTION 01 33 00 – Submittals 01 33 00–1
SECTION 01 40 00 – Quality Requirements 01 40 00–1
SECTION 01 45 23 – Testing and Inspection Services 01 45 23–1
SECTION 01 50 00 – Temporary Facilities and Controls 01 50 00–1
SECTION 01 60 00 – Product Requirements 01 60 00–1
SECTION 01 73 00 – Execution 01 73 00–1
SECTION 01 73 20 – Selective Demolition 01 73 20–1
SECTION 01 73 29 – Cutting and Patching 01 73 29–1
SECTION 01 74 19 – Construction Waste Management 01 74 19–1
SECTION 01 77 00 – Contract Closeout 01 77 00–1

DIVISION 02 – EXISTING CONDITIONS
SECTION 02 32 00 – Geotechnical Information Available to Bidders 02 32 00–1

DIVISION 03 – CONCRETE
SECTION 03 10 00 – Concrete Forms and Accessories 03 10 00–1
SECTION 03 20 00 – Concrete Reinforcement 03 20 00–1
SECTION 03 30 00 – Cast–in–Place Concrete 03 30 00–1
SECTION 03 35 00 – Concrete Floor Finishing 03 35 00–1
SECTION 03 39 00 – Concrete Curing 03 39 00–1

DIVISION 04 – MASONRY
SECTION 04 06 50 – Mortar and Masonry Grout 04 06 50–1
SECTION 04 15 00 – Masonry Accessories 04 15 00–1
SECTION 04 20 00 – Reinforced Unit Masonry 04 20 00–1
SECTION 04 25 13 – Thin Brick Panel System 04 25 13–1

DIVISION 05 – METALS
SECTION 05 12 00 – Structural Steel 05 12 00–1
SECTION 05 31 00 – Steel Deck 05 31 00–1
SECTION 05 40 00 – Cold Formed Metal Framing 05 40 00–1
SECTION 05 50 00 – Metal Fabrications 05 50 00–1
SECTION 05 50 50 – Miscellaneous Steel 05 50 50–1
SECTION 05 51 00 – Concrete Filled Metal Pan Stairs 05 51 00–1
SECTION 05 51 33 – Aluminum Ladders 05 51 33–1

DIVISION 06 – WOOD & PLASTICS
SECTION 06 10 00 – Rough Carpentry 06 10 00–1
SECTION 06 20 00 – Finish Carpentry and Architectural Millwork 06 20 00–1
SECTION 06 41 16 – Plastic-Laminate-Clad Architectural Cabinets 06 41 16–1

DIVISION 07 – THERMAL AND MOISTURE PROTECTION

SECTION 07 11 13 – Emulsified Asphalt Dampproofing 07 11 13–1
SECTION 07 21 00 – Board and Batt Insulation 07 21 00–1
SECTION 07 25 13 – Silicone Weather Barrier Transition 07 25 13–1
SECTION 07 26 16 – Under Slab Vapor Retarder 07 26 16–1
SECTION 07 27 26 – Fluid–Applied Membrane Air Barriers, Vapor Impermeable 07 27 26–1
SECTION 07 42 13 – Metal Composite Material Wall Panels 07 42 13–1
SECTION 07 53 23 – EPDM Membrane Roofing 07 53 23–1
SECTION 07 62 00 – Sheet Metal Flashing and Trim 07 62 00–1
SECTION 07 72 33 – Roof Hatches 07 72 33–1
SECTION 07 84 00 – Firestopping 07 84 00–1
SECTION 07 92 00 – Joint Sealers 07 92 00–1
SECTION 07 95 13 – Expansion Joint Covers 07 95 13–1

DIVISION 08 – OPENINGS

SECTION 08 11 13 – Hollow Metal Doors and Frames 08 11 13–1
SECTION 08 14 16 – Flush Wood Doors 08 14 16–1
SECTION 08 41 13 – Aluminum-Framed Entrance Doors 08 41 13–1
SECTION 08 44 13 – Glazed Aluminum Curtain Walls 08 44 13–1
SECTION 08 71 00 – Door Hardware 08 71 00–1
SECTION 08 80 00 – Glazing 08 80 00–1
SECTION 08 83 00 – Frameless Mirrors 08 83 00–1
SECTION 08 84 00 – Insulated Metal Glazing Panels 08 84 00–1
SECTION 08 88 16 – Fire–Rated Glazing 08 88 16–1

DIVISION 09 – FINISHES

SECTION 09 00 00 – Interior Color and Material Specification 09 00 00–1
SECTION 09 29 00 – Gypsum Board Assemblies 09 29 00–1
SECTION 09 30 13 – Tile Work 09 30 13–1
SECTION 09 51 00 – Suspended Acoustical Ceilings 09 51 00–1
SECTION 09 51 26 – Wood Veneer Grille Ceiling 09 51 26–1
SECTION 09 64 23 – Wood Flooring 09 64 23–1
SECTION 09 65 13 – Resilient Stair Treads and Accessories 09 65 13–1
SECTION 09 65 19 – Resilient Floor Tile and Accessories 09 65 19–1
SECTION 09 68 13 – Carpet Tile 09 68 13–1
SECTION 09 84 13 – Acoustical Wall Panels 09 84 13–1
SECTION 09 91 13 – Exterior Paints and Coatings 09 91 13–1
SECTION 09 91 23 – Interior Paints and Coatings 09 91 23–1

DIVISION 10 – SPECIALTIES

SECTION 10 21 13 – Compact Laminate Toilet Compartments 10 21 13–1
SECTION 10 21 14 – Stainless Steel Toilet Compartments 10 21 14–1
SECTION 10 22 19 – Demountable Partitions 10 22 19–1
SECTION 10 28 13 – Toilet Room Accessories 10 28 13–1
SECTION 10 44 13 – Fire Extinguishers, Cabinets and Accessories 10 44 13–1
SECTION 10 73 13 – Metal Canopies 10 73 13–1

DIVISION 12 – FURNISHINGS

SECTION 12 25 13 – Motorized Roller Shades 12 25 13-1
SECTION 12 36 61 – Quartz Surfacing Countertops 12 36 61-1

DIVISION 14 – CONVEYING CONSTRUCTION

SECTION 14 24 00 – Machine Room–Less Hydraulic Passenger Elevators 14 24 00–1

DIVISION 21 – FIRE SUPPRESSION (By Omdex Incorporated Consulting Engineers)
SECTION 21 00 00 – General Fire and Suppression Requirements 21 00 00-1
SECTION 21 13 14 – Automatic Sprinkler Systems (Wet Pipe Systems)..... 21 13 14-1
SECTION 21 22 00 – Clean Agent Fire Suppression Systems..... 21 22 00-1

DIVISION 22 – PLUMBING (By Omdex Incorporated Consulting Engineers)
SECTION 22 01 50 – Plumbing General Provisions 22 01 50-1
SECTION 22 03 20 – Piping and Pipe Fittings for Plumbing 22 03 50-1
SECTION 22 03 60 – Hangers and Supports 22 03 60-1
SECTION 22 05 23 – General Duty Valves for Plumbing Piping 22 05 23-1
SECTION 22 05 53 – Identification for Plumbing and Piping Equipment 22 05 53-1
SECTION 22 11 18 – Domestic Water Distribution System 22 11 18-1
SECTION 22 11 19 – Plumbing Specialties 22 11 19-1
SECTION 22 13 16 – Sanitary Waste and Vent Piping..... 22 13 16-1
SECTION 22 13 19 – Sanitary Drainage Specialties 22 13 19-1
SECTION 22 14 13 – Storm Drainage Piping 22 14 13-1
SECTION 22 14 23 – Storm Drainage Piping Specialties..... 22 14 23-1
SECTION 22 39 00 – Tests 22 39 00-1
SECTION 22 40 00 – Plumbing Fixtures..... 22 55 00-1

DIVISION 23 – HEATING, VENTILATING AND AIR CONDITIONING (By Omdex Incorporated Consulting Engineers)
SECTION 23 00 00 – Special Requirements for Mechanical and Electric Work 23 00 00-1
SECTION 23 00 50 – Vibration Isolation and Seismic Restraints for All MEP Work 23 00 50-1
SECTION 23 60 00 – General Provision to HVAC Work..... 23 60 00-1
SECTION 23 75 00 – Rooftop Energy Recovery HVAC Units 23 75 00-1
SECTION 23 80 10 – HVAC Specialties 23 80 10-1
SECTION 23 81 00 – VRF Systems..... 23 81 50-1
SECTION 23 82 00 – Piping for HVAC..... 23 82 00-1
SECTION 23 83 00 – Valves for HVAC 23 83 00-1
SECTION 23 84 00 – Sheet Metal Ductwork 23 84 00-1
SECTION 23 85 00 – Insulation for HVAC Work..... 23 85 00-1
SECTION 23 90 00 – Testing and Balancing 23 90 00-1
SECTION 23 95 00 – Automatic Temperature Controls 23 95 00-1

DIVISION 26 – ELECTRICAL (By Omdex Incorporated Consulting Engineers)
SECTION 26 01 00 – General Electrical Requirements 26 01 00-1
SECTION 26 02 00 – Short Circuit and Protective Device Coordination Study.....26 02 00-1
SECTION 26 04 00 – Electric Service..... 26 04 00-1
SECTION 26 05 20 – Inspections and Tests 26 05 00-1
SECTION 26 05 40 – Equipment Supports.....26 05 40-1
SECTION 26 05 50 – Nameplates and Device Plate Markings 26 05 50-1
SECTION 26 07 00 – Underground Duct Banks.....26 07 00-1
SECTION 26 11 00 – Raceways and Boxes for Electrical Systems.....26 11 00-1
SECTION 26 11 05 – Wireways.....26 11 05-1
SECTION 26 11 10 – Conduits, Fittings and Supports 26 11 10-1
SECTION 26 12 00 – Wires and Cables (600v and below) 26 12 00-1
SECTION 26 13 10 – Pull and Junction Boxes..... 26 13 10-1
SECTION 26 13 40 – Outlet Boxes 26 13 40-1
SECTION 26 14 00 – Wiring Devices 26 14 00-1

SECTION 26 15 00 – 480 V Service Switchboard 26 15 00-1
SECTION 26 16 00 – Panelboards 26 16 00-1
SECTION 26 17 00 – Low Voltage Transformers 26 17 00-1
SECTION 26 44 00 – Disconnect Switches 26 44 00-1
SECTION 26 45 00 – Grounding 26 45 00-1
SECTION 26 45 50 – Lightning Protection System.....26 45 50-1
SECTION 26 47 50 – Overcurrent Protective Devices 26 47 50-1
SECTION 26 48 00 – 600 V Fuses 26 48 00-1
SECTION 26 49 00 – Uninterruptable Power Supply (UPS).....26 49 00-1
SECTION 26 50 00 – Lighting Fixtures 26 50 00-1
SECTION 26 52 50 – Lighting Control Commissioning.....26 52 50-1
SECTION 26 72 00 – Fire Alarm System Work Notes 26 72 00-1
SECTION 26 72 10 – Fire Alarm System 26 72 10-1
SECTION 26 73 10 – Two Way Emergency Communication System 26 73 10-1
SECTION 26 74 00 – Conduit Raceway Systems 26 74 00-1
SECTION 26 74 10 – Emergency Radio Responders System 26 74 10-1
SECTION 26 75 00 – Emergency Generator 26 75 00-1
SECTION 26 76 00 – Automatic Transfer Switches..... 26 76 00-1

DIVISION 27 – COMMUNICATIONS
SECTION 27 05 00 – IT, Telecom and AV General Contractor Requirements 27 05 00–1
SECTION 27 13 00 – LAN Infrastructure 27 13 00–1
SECTION 27 41 00 – Audiovisual Systems 27 41 00–1

DIVISION 31 – EARTHWORK
SECTION 31 05 00 – Basic Site Materials and Methods 31 05 00–1
SECTION 31 10 00 – Site Preparation.....31 10 00–1
SECTION 31 11 00 – Site Clearing 31 11 00–1
SECTION 31 20 00 – Earthmoving 31 05 00–1
SECTION 31 22 00 – Grading.....31 22 00–1
SECTION 31 23 00 – Excavation 31 23 00–1
SECTION 31 23 23 – Fill and Backfill 31 23 23–1
SECTION 31 25 00 – Erosion and Sedimentation Control 31 25 00–1

DIVISION 32 – EXTERIOR IMPROVEMENTS
SECTION 32 10 00 – Bases, Ballasts, Pavements and Appurtenances 32 10 00–1
SECTION 32 11 00 – Unbound Base Courses 32 11 00–1
SECTION 32 11 23 – Aggregate Base Courses 32 11 23–1
SECTION 32 12 00 – Flexible Pavement.....32 12 00–1
SECTION 32 12 16 – Bituminous Concrete Paving 32 12 16–1
SECTION 32 12 19 – Pavement Restoration Overlays 32 12 19–1
SECTION 32 13 13 – Portland Cement Concrete Paving.....32 13 13–1
SECTION 32 17 23 – Painted Traffic Marking 32 17 23–1
SECTION 32 31 29 – Fences and Gates (Polyvinylchloride and Wood) 32 31 29–1
SECTION 32 80 00 – Irrigation.....32 80 00–1
SECTION 32 90 00 – Planting.....32 90 00–1
SECTION 32 91 00 – Landscape Planting Standard 32 91 00–1
SECTION 32 92 19 – Seeding and Soil Supplements 32 92 19–1

DIVISION 33 – UTILITIES
SECTION 33 11 00 – Water Distribution 33 11 00–1
SECTION 33 13 00 – Disinfection of Water Distribution System 33 13 00–1
SECTION 33 30 00 – Sanitary Sewer Piping 33 30 00–1

SECTION 33 40 00 – Drainage and Containment 33 40 00–1
SECTION 33 42 00 – Storm Drainage Piping 33 42 00–1
SECTION 33 42 16 – Manholes and Covers 33 42 16–1
SECTION 33 46 00 – Subdrainage 33 46 00–1
SECTION 33 52 16 – Natural Gas Distribution 33 52 16–1

DIVISION 34 – TRANSPORTATION
SECTION 34 71 00 – Walk and Road Appurtenances.....34 71 00–1

END OF SECTION 00 01 10

SECTION 01 10 00 – SUMMARY

PART 1 - GENERAL

1.1 PROJECT

A. Project Name: SVOC New Office Addition

B. Owner's Name: Orange & Rockland Utilities, Inc.

C. Architect/Engineer's Name: SNS Architects & Engineers, P.C.

D. The Project consists of the following items:
   1. Selective demolition and removal of debris.
   2. Construction of a new office building, separated by a fire-wall from the existing building
   3. Associated site work.

E. Contractor's Duties:
   1. Except as specifically noted, provide and pay for:
      a. Labor, materials, and equipment;
      b. Tools, construction equipment, and machinery;
      c. City water, heat, utilities, etc. required for construction;
      d. Other facilities and services necessary for proper execution and completion of work.

   2. Secure and pay for, as necessary, proper execution and completion of work, and as applicable:
      a. Permits;
      b. Government Fees;
      c. Licenses;
      d. Inspections of all work.

   3. Give required notice to all governmental agencies and utilities;

   4. Comply with codes, ordinances, regulations, rules, orders and other legal requirements of public authorities which bear on performance of work.

   5. Promptly submit written notice to Architect/Engineer of observed variance of Contract Documents from legal requirements:
      a. Appropriate modification to Contract Documents will adjust necessary changes;
      b. Assume responsibility for work known to be contrary to such requirements when above notice has not been given.

1.2 CONTRACT DESCRIPTION

A. Contract Type: Per Owner.

1.3 WORK BY OWNER

A. Items noted NIC (Not in Contract) will be supplied and installed by Owner before Substantial Completion.

1.4 CONTRACTOR USE OF SITE AND PREMISES

A. Arrange use of site and premises to allow:
   1. Work by Others.
   2. Work by Owner.

B. Provide access to and from site as required by law and by Owner.

C. Emergency Building Exits During Construction: Keep all exits required by code open during construction period; provide temporary exit signs and lighting as required by the Building Code and OSHA safety standards.
   1. Do not obstruct roadways, sidewalks, or other public ways without permit.

D. Existing building spaces may not be used for storage.

E. Utility Outages and Shutdown: Limit shutdown of utility services. Arrange shutdowns at least 48 hours in advance with Owner.
   1. Prevent accidental disruption of utility services to other facilities.

1.5 WORK SEQUENCE

A. Coordinate construction schedule and operations with Owner.

PART 2 - PRODUCTS - NOT USED

PART 3 - EXECUTION - NOT USED

END OF SECTION 01 10 00

SECTION 01 29 00 - PRICE AND PAYMENT PROCEDURES

PART 1 - GENERAL

1.1 SECTION INCLUDES:

A. Procedures for preparation and submittal of applications for progress payments.

B. Documentation of changes in Contract Sum and Contract Time.

C. Change Procedures.

D. Procedures for preparation and submittal for final payment

1.2 SCHEDULE OF VALUES:

A. Submit a printed schedule on AIA form G703 – Application and Certificate for Payment Continuation Sheet. Contractor's standard form or electronic media printout will be considered.

B. Submit Schedule of Values within 15 days after date of Owner – Contractor Agreement.

C. Format: Utilize the Table of Contents of the specification. Identify each line item with number and title of the specification Section. Identify site mobilization, bonds and insurance, general conditions, and close-out documents.

D. When requested or where applications for payment are likely to include products, equipment, furnishings, etc. delivered or fabricated but not yet installed; provide individual line items for material cost and other applicable phases of completion.

E. Include a line item for each allowance scheduled.

F. The Architect/Engineer will notify the Contractor if the schedule is not satisfactory; revise and resubmit acceptable schedule.

G. Revise schedule to list approved Change Orders, with each Application for Payment.

1.3 FIRST PAYMENT PROCEDURE

A. The first application for payment will not be reviewed until the following submittals have been received:
   1. Certificate of insurance.
   2. Performance and payment bond, when required.
   3. Schedule of values.
   4. List of subcontractors, principal suppliers and fabricators.
   5. Contractor's construction schedule.
   6. Submittal schedule.
   7. Names of the contractor's principal staff assigned to the project.
   8. Copies of the building permit and other authorizations from governing authorities.

1.4 APPLICATION FOR PROGRESS PAYMENTS

A. Payment Period: Submit progress payments on a monthly basis unless otherwise stipulated in the Agreement.

B. Payment by Owner: The Owner will make payment within 45 days of receipt of an application of payment approved by the architect.

C. Form: AIA G702 Application and Certificate for Payment and AIA G703 – Continuation Sheet.
   1. Notarize each copy
   2. All forms must be typewritten.

D. For each item, provide a column for listing each of the following:
   1. Item Number
   2. Description of Work
   3. Schedule of Values
   4. Previous Application
   5. Work in Place and Store Materials under this application
   6. Authorized Change Orders
   7. Total Completed and Stored to Date
   8. Percentage of Completion
   9. Balance to Finish
   10. Retainage

E. Execute certification by signature of authorized officer.

F. Use data from approved Schedule of Values. Provide dollar values in each column for each line item for portion of work performed and for Stored Materials.

G. Include the following with the application:
   1. Transmittal letter
   2. Partial release of lien from major Subcontractors and vendors
   3. Affidavits and insurance certificates attesting to off-site store products.

1.5 APPLICATION FOR FINAL PAYMENT

A. Prepare Application for Final Payment as specified an in accordance with the General Conditions of the Contract.

B. Application for Final Payment will not be considered until all closeout procedures have been completed and all closeout documents have been submitted and deemed complete.

PART 2 – PRODUCTS (not used)

PART 3 – EXECUTION (not used)

END OF SECTION 01 29 00

SECTION 01 31 00 - PROJECT MANAGEMENT AND COORDINATION

PART 1 - GENERAL

1.1 SUMMARY

A. This Section includes administrative provisions for coordinating construction operations on Project including, but not limited to, the following:
   1. Coordination Drawings.
   2. Project meetings.

1.2 COORDINATION

A. Coordination: Coordinate construction operations included in different Sections of the Specifications to ensure efficient and orderly installation of each part of the Work. Coordinate construction operations, included in different Sections that depend on each other for proper installation, connection, and operation.
   1. Schedule construction operations in sequence required to obtain the best results where installation of one part of the Work depends on installation of other components, before or after its own installation.
   2. Coordinate installation of different components with other contractors to ensure maximum accessibility for required maintenance, service, and repair.
   3. Make adequate provisions to accommodate items scheduled for later installation.
   4. Where availability of space is limited, coordinate installation of different components to ensure maximum performance and accessibility for required maintenance, service, and repair of all components, including mechanical and electrical.

B. Prepare memoranda for distribution to each party involved, outlining special procedures required for coordination. Include such items as required notices, reports, and list of attendees at meetings.
   1. Prepare similar memoranda for Owner and separate contractors if coordination of their Work is required.

C. Administrative Procedures: Coordinate scheduling and timing of required administrative procedures with other construction activities and activities of other contractors to avoid conflicts and to ensure orderly progress of the Work. Such administrative activities include, but are not limited to, the following:
   1. Preparation of Contractor's Construction Schedule.
   2. Preparation of the Schedule of Values.
   3. Installation and removal of temporary facilities and controls.
   4. Delivery and processing of submittals.
   5. Progress meetings.
   6. Preinstallation conferences.
   7. Project closeout activities.
   8. Startup and adjustment of systems.
   9. Project closeout activities.

1.3 PROJECT MEETINGS

A. General: Schedule and conduct meetings and conferences at Project site, unless otherwise indicated.
   1. Attendees: Inform participants and others involved, and individuals whose presence is required, of date and time of each meeting. Notify Owner and Architect/Engineer of scheduled meeting dates and times.
   2. Agenda: Prepare the meeting agenda. Distribute the agenda to all invited attendees.
   3. Minutes: Record significant discussions and agreements achieved. Distribute the meeting minutes to everyone concerned, including Owner and Architect, within five (5) days of the meeting.

B. Preconstruction Conference: Schedule a preconstruction conference before starting construction, at a time convenient to Owner and Architect, but no later than fifteen (15) days after execution of the Agreement. Hold the conference at Project site or another convenient location. Conduct the meeting to review responsibilities and personnel assignments.
   1. Attendees: Authorized representatives of Owner, Architect/Engineer, and their consultants; Contractor and its superintendent; major subcontractors; suppliers; and other concerned parties shall attend the conference. All participants at the conference shall be familiar with Project and authorized to conclude matters relating to the Work.
   2. Agenda: Discuss items of significance that could affect progress, including the following:
      a. Tentative construction schedule.
      b. Phasing.
      c. Critical work sequencing and long-lead items.
      d. Designation of key personnel and their duties.
      e. Procedures for processing field decisions and Change Orders.
      f. Procedures for requests for interpretations (RFIs).
      g. Procedures for testing and inspecting.
      h. Procedures for processing Applications for Payment.
      i. Distribution of the Contract Documents
      j. Preparation of Record Documents.
      k. Use of the premises and existing building.
      l. Work restrictions.
      m. Owner's occupancy requirements.
      n. Responsibility for temporary facilities and controls.
      o. Construction waste management and recycling.
      p. Parking availability.
      q. Office, work, and storage areas.
      r. Equipment deliveries and priorities.
      s. First aid.
      t. Security.
      u. Progress cleaning.
      v. Working hours.
   3. Minutes: Project Coordinator will record and distribute meeting minutes.

C. Progress Meetings: Conduct progress meetings .at bi-weekly intervals. Coordinate dates of meetings with preparation of payment requests.
   1. Attendees: In addition to representatives of Owner and Architect, each contractor, subcontractor, supplier, and other entity concerned with current progress or involved in planning, coordination, or performance of future activities shall be represented at these

meetings. All participants at the conference shall be familiar with Project and authorized to conclude matters relating to the Work.

2. Agenda: Review and correct or approve minutes of previous progress meeting. Review other items of significance that could affect progress. Include topics for discussion as appropriate to status of Project.
   a. Contractor's Construction Schedule: Review progress since the last meeting. Determine whether · each activity is on time, ahead of schedule, or behind schedule, in relation to Contractor's Construction Schedule. Determine how construction behind schedule will be expedited; secure commitments from parties involved to do so. Discuss whether schedule revisions are required to ensure that current and subsequent activities will be completed within the Contract Time.
      1) Review schedule for next period.

   b. Review present and future needs of each entity present, including the following:
      1) Interface requirements.
      2) Sequence of operations.
      3) Status of submittals.
      4) Deliveries.
      5) Off-site fabrication.
      6) Access.
      7) Site utilization.
      8) Temporary facilities and controls.
      9) Work hours.
      10) Hazards and risks.
      11) Progress cleaning.
      12) Quality and work standards.
      13) Status of correction of deficient items.
      14) Field observations.
      15) Requests for interpretations (RFIs).
      16) Status of proposal requests.
      17) Pending changes.
      18) Status of Change Orders.
      19) Pending claims and disputes.
      20) Documentation of information for payment requests.
3. Minutes: Project Coordinator will record and distribute the meeting minutes.
4. Reporting: Distribute minutes of the meeting to each party present and to parties who should have been present.
   a. Schedule Updating: Revise Contractor's Construction Schedule after each progress meeting where revisions to the schedule have been made or recognized. Issue revised schedule concurrently with the report of each meeting.

END OF SECTION 01 31 00

SECTION 01 31 19 - COORDINATION OF WORK AND MEETINGS

PART 1 – GENERAL

1.1 SCOPE OF WORK

A. Under this Section of the Specifications, the Contractor shall be responsible for scheduling construction activities and coordination of construction activities between subcontractors and scheduling and conducting on or off-site project meetings.

PART 2 - PRODUCTS – NOT USED

PART 3 – EXECUTION

3.1 MEETINGS

A. Pre-Construction Meeting

1. Prior to the commencement of the work, the Contractor shall organize a pre-construction meeting at the site. Attendees to this meeting shall be the Owner, the Contractor, superintendents or project managers from all major subcontractors, the testing laboratory, and the Architect/Engineer.
2. The Contractor shall provide to the Owner an agenda of items for discussion. The Owner may supplement this agenda with those items for the Owner's discussions. The combined agenda shall then be prepared and distributed by the Contractor.
3. The Contractor shall be responsible for recording and publishing meeting minutes from the pre-construction meeting. Meeting minutes shall be published within three business days of the meeting.

B. Construction Coordination Meetings

1. Upon commencement of the Work and until such time as the Work is completed, the Contractor shall schedule and conduct regular construction coordination meetings. Attendees at these meetings shall be the Contractor, superintendents or project managers from all subcontractors working on site, the testing laboratory, Architect/Engineer, and the Owner. These meetings shall be conducted at a minimum of once every two weeks.
2. Contractor shall be responsible for notifying all attendees, preparing meeting agendas, and recording and publishing meeting minutes. Meeting minutes shall be published within three business days of the meeting, and distribution of minutes shall include all of the attendees, Architect, Engineer, and Owner.
3. Meetings shall include discussion of all items necessary for the coordination and timely completion of the work and shall include, but not be limited to, project schedule, work progress, conflicts, safety, and other items affecting the work.

C. Special Meetings

1. Contractor shall schedule and conduct any special meetings as required by the Contract Documents or as necessary to perform the work. Such meetings would include but not be limited to meetings with local, state, or federal authorities and utility companies.

3.2 COORDINATION

A. The Contractor is to coordinate the space requirements, supports and installation of all work which is indicated in the Contract Documents. Utilize spaces efficiently to maximize accessibility for other installations, for maintenance, and for repairs.

B. The Contractor is responsible to fully coordinate all areas of work. This coordination is to be formalized in a set of coordination drawings signed off by all necessary trades and submitted to the General Contractor. This process is to define areas of conflict, which can be resolved prior to the start of material/equipment fabrication. The conflicts are to be brought to the General Contractor's immediate attention in writing for resolution. Should a conflict arise after issuance of the coordination drawings to the General Contractor, the Client will not be responsible for any costs that may be necessary to resolve the conflict.

C. Coordination of Work
   1. In accordance with Article 1.3(3) of the General Conditions, the Contractor shall be responsible for the coordination and distribution of the work among its own forces and its subcontractors.
   2. Contractor shall review the Contract Documents and meet with all subcontractors to ensure that all work required by the Contract Documents has been assigned and properly scheduled.
   3. Contractor shall be responsible for regulating access to perform the work and shall properly sequence the work so that all items required by the Contract Documents are installed in an orderly and workmanlike manner.
   4. Scheduling of all work shall be closely coordinated with the Owner. All work within the present yard or buildings shall be performed in a manner acceptable to the Owner and at a time mutually agreed upon prior to the time the work commences.
   5. The Contractor shall be responsible for initiating all necessary meetings to schedule the work.

END OF SECTION 01 31 19

SECTION 01 33 00 - SUBMITTALS

PART 1 - GENERAL

1.1 SUMMARY

A. During the performance of this contract, the Contractor shall consider as part of his/her general duties the submittal process;

B. And shall not, where indicated, proceed with the individual Work of each Specification Section until such “Submittals” have been approved by Owner and/or Owner’s Architect/Engineer through stamped Shop Drawings, and/or other necessary means of approval.

1.2 SUBMITTALS

A. The Contractor shall submit a submittal log to Architect/Engineer within 14 calendar days of Notice to Proceed. This log shall list all anticipated submittals as required by the individual specification sections.

B. Furnish shop drawings for all shop fabricated items. Submit electronically (.pdf format) via email. Check field conditions and field dimensions before making shop drawings. Conform to variations found and report to the Architect any serious discrepancies in the design or construction which will conflict with the installation. Submission of shop drawings indicates that the General Contractor has checked the submission for field dimensions, contract requirements and coordination with other trades.

C. Contact information for the above submittals are:

1. Architect/Engineer:
   SNS Architects & Engineers, P.C.
   One Paragon Drive
   Montvale, New Jersey 07645
   Attention: Dominick Piccininni (dpiccininni@sns-arch-eng.com)

2. Owner’s Representative:
   Orange & Rockland Utilities, Inc.
   390 West Route 59
   Spring Valley, New York 10977
   Attention: Sarah Ereifej (ereifejs@oru.com)

E. The Contractor shall make any corrections required by the Architect/Engineer and file with the Architect/Engineer one corrected copy, file with the Owner one corrected copy.

F. The Architect/Engineer's review of such drawings and/or schedules will not relieve the Contractor from responsibility for deviations from drawings or Specifications unless the Contractor has, in writing, called the Architect/Engineer's attention to such deviations at the time of submission, nor shall such review in any way relieve the Contractor from responsibility for error of any sort in shop drawings or schedules.

G. The Architect/Engineer will return all submittals electronically (.pdf format).

1.3 OWNER'S RESPONSIBILITY

A. The Owner will with reasonable promptness furnish additional instructions consistent with the Contract Documents by means of drawings, sketches, or otherwise, necessary for the proper execution of the work.

1.4 CONTRACTOR'S RESPONSIBILITY

A. Prior to submitting shop drawings to the Architect/Engineer, the Contractor shall review the shop drawings prepared by itself and its subcontractors and materialmen for suitability, accurateness, and completeness. The Contractor shall approve the shop drawings for submission, clearly indicating its approval on the shop drawings prior to submission. Shop drawings submitted to the Architect/Engineer without proper prior review and approval by the Contractor will be promptly returned by the Architect/Engineer without review and will not constitute delay of the project by the Architect/Engineer.

1.5 ARCHITECT/ENGINEER'S RESPONSIBILITY

A. The Architect/Engineer will review and return submittals within 14 calendar days after receipt of suitable, accurate, complete submittals. Unsuitable, inaccurate, incomplete submittals shall be returned as rejected within said 14-day period.

B. The Architect/Engineer will return one electronic copy of the submittals to the Contractor, along with one copy to the Owner.

1.6 SUBMITTALS REQUIRED

A. The Contractor shall submit all drawings and information necessary to completely and adequately define the products and materials proposed to be furnished. As a minimum and without limitations, the Contractor shall submit the information in accordance with the individual specification sections.

1.7 JOB COMPLETION

A. At the completion of the work and before final payment, the Contractor shall turn over to the Owner all drawings, manufacturer instruction sheets, and all other technical data applicable to work furnished under this contract.

PART 2 - PRODUCTS - NOT USED

PART 3 - EXECUTION - NOT USED

END OF SECTION 01 33 00

SECTION 01 40 00 - QUALITY REQUIREMENTS

PART 1 - GENERAL

1.1 SECTION INCLUDES

A. References and standards.

B. Quality assurance submittals.

C. Mock-ups.

D. Control of installation.

E. Tolerances.

F. Testing and inspection services.

G. Manufacturers' field services.

1.2 RELATED SECTIONS

A. General Conditions: Inspections and approvals required by public authorities.

B. Section 01 33 00 - Administrative Requirements: Submittal procedures.

C. Section 01 60 00 - Product Requirements: Requirements for material and product quality.

1.3 REFERENCES

A. ASTM C 1021 - Standard Practice for Laboratories Engaged in Testing of Building Sealants.

B. ASTM C 1077 - Standard Practice for Laboratories Testing Concrete and Concrete Aggregates for Use in Construction and Criteria for Laboratory Evaluation.

C. ASTM C 1093 - Standard Practice for Accreditation of Testing Agencies for Unit Masonry.

D. ASTM D 3740 - Standard Practice for Minimum Requirements for Agencies Engaged in the Testing and/or Inspection of Soil and Rock as Used in Engineering Design and Construction.

E. ASTM E 329 - Standard Specification for Agencies Engaged Construction Inspection and/or Testing.

F. ASTM E 543 - Standard Practice for Agencies Performing Nondestructive Testing.

1.4 SUBMITTALS

A. Testing Agency Qualifications:
   1. Prior to start of Work, submit agency name, address, and telephone number, and names of full time registered Engineer and responsible officer.

2. Submit copy of report of laboratory facilities inspection made by NIST Construction Materials Reference Laboratory during most recent inspection, with memorandum of remedies of any deficiencies reported by the inspection.

B. Design Data: Submit for Architect/Engineer's knowledge as contract administrator or for the Owner, for information for the limited purpose of assessing conformance with information given and the design concept expressed in the contract documents.

C. Test Reports: After each test/inspection, promptly submit two copies of report to Architect/Engineer and to Contractor.
   1. Include:
      a. Date issued.
      b. Project title and number.
      c. Name of inspector.
      d. Date and time of sampling or inspection.
      e. Identification of product and specifications section.
      f. Location in the Project.
      g. Type of test/inspection.
      h. Date of test/inspection.
      i. Results of test/inspection.
      j. Conformance with Contract Documents.
      k. When requested by Architect/Engineer, provide interpretation of results.
   2. Test reports are submitted for Architect/Engineer's knowledge as contract administrator or for the Owner, for information for the limited purpose of assessing conformance with information given and the design concept expressed in the contract documents.

D. Certificates: When specified in individual specification sections, submit certification by the manufacturer and Contractor or installation/application subcontractor to Architect/Engineer, in quantities specified for Product Data.
   1. Indicate material or product conforms to or exceeds specified requirements. Submit supporting reference data, affidavits, and certifications as appropriate.
   2. Certificates may be recent or previous test results on material or product, but must be acceptable to Architect/Engineer.

E. Manufacturer's Instructions: When specified in individual specification sections, submit printed instructions for delivery, storage, assembly, installation, start-up, adjusting, and finishing, for the Owner's information. Indicate special procedures, perimeter conditions requiring special attention, and special environmental criteria required for application or installation.

F. Manufacturer's Field Reports: Submit reports for Architect/Engineer's benefit as contract administrator or for Owner.
   1. Submit report in duplicate within 2 days of observation to Architect/Engineer for information.
   2. Submit for information for the limited purpose of assessing conformance with information given and the design concept expressed in the contract documents.

G. Erection Drawings: Submit drawings for Architect/Engineer's benefit as contract administrator or for Owner.
   1. Submit for information for the limited purpose of assessing conformance with information given and the design concept expressed in the contract documents.

2. Data indicating inappropriate or unacceptable Work may be subject to action by Architect/Engineer or Owner.

1.5 TESTING AND INSPECTION AGENCIES

A. Contractor shall employ and pay for services of an independent testing agency to perform specified testing and inspection unless otherwise specified.

B. Employment of agency in no way relieves Contractor of obligation to perform Work in accordance with requirements of Contract Documents.

C. Contractor Employed Agency:
   1. Testing agency: Comply with requirements of ASTM E 329, ASTM E 543, ASTM C 1021, ASTM C 1077, and ASTM C 1093.
   2. Inspection agency: Comply with requirements of ASTM D3740 and ASTM E329.
   3. Laboratory: Authorized to operate in the State in which the Project is located.
   4. Laboratory Staff: Maintain a full time registered Engineer on staff to review services.
   5. Testing Equipment: Calibrated at reasonable intervals either by NIST or using an NIST established Measurement Assurance Program, under a laboratory measurement quality assurance program.

PART 2 - PRODUCTS - NOT USED

PART 3 - EXECUTION

3.1 CONTROL OF INSTALLATION

A. Monitor quality control over suppliers, manufacturers, products, services, site conditions, and workmanship, to produce Work of specified quality.

B. Comply with manufacturers' instructions, including each step in sequence.

C. Should manufacturers' instructions conflict with Contract Documents, request clarification from Architect/Engineer before proceeding.

D. Comply with specified standards as minimum quality for the Work except where more stringent tolerances, codes, or specified requirements indicate higher standards or more precise workmanship.

E. Have Work performed by persons qualified to produce required and specified quality.

F. Verify that field measurements are as indicated on shop drawings or as instructed by the manufacturer.

G. Secure products in place with positive anchorage devices designed and sized to withstand stresses, vibration, physical distortion, and disfigurement.

3.2 MOCK-UPS

A. Tests will be performed under provisions identified in this section and identified in the respective product specification sections.

B. Assemble and erect specified items with specified attachment and anchorage devices, flashings, seals, and finishes.

C. Accepted mock-ups shall be a comparison standard for the remaining Work.

D. Where mock-up has been accepted by Architect/Engineer and is specified in product specification sections to be removed, remove mock-up and clear area when directed to do so.

3.3 TOLERANCES

A. Monitor fabrication and installation tolerance control of products to produce acceptable Work. Do not permit tolerances to accumulate.

B. Comply with manufacturers' tolerances. Should manufacturers' tolerances conflict with Contract Documents, request clarification from Architect/Engineer before proceeding.

C. Adjust products to appropriate dimensions; position before securing products in place.

3.4 TESTING AND INSPECTION

A. See individual specification sections for testing and inspection required.

B. Testing Agency Duties:
   1. Test samples of mixes submitted by Contractor.
   2. Provide qualified personnel at site. Cooperate with Architect/Engineer and Contractor in performance of services.
   3. Perform specified sampling and testing of products in accordance with specified standards.
   4. Ascertain compliance of materials and mixes with requirements of Contract Documents.
   5. Promptly notify Architect/Engineer and Contractor of observed irregularities or non-conformance of Work or products.
   6. Perform additional tests and inspections required by Architect/Engineer.
   7. Submit reports of all tests/inspections specified.

C. Limits on Testing/Inspection Agency Authority:
   1. Agency may not release, revoke, alter, or enlarge on requirements of Contract Documents.
   2. Agency may not approve or accept any portion of the Work.
   3. Agency may not assume any duties of Contractor.
   4. Agency has no authority to stop the Work.

D. Contractor Responsibilities:
   1. Deliver to agency at designated location, adequate samples of materials proposed to be used which require testing, along with proposed mix designs.
   2. Cooperate with laboratory personnel, and provide access to the Work and to manufacturers' facilities.
   3. Provide incidental labor and facilities:
      a. To provide access to Work to be tested/inspected.
      b. To obtain and handle samples at the site or at source of Products to be

tested/inspected.
c. To facilitate tests/inspections.
d. To provide storage and curing of test samples.

4. Notify Architect/Engineer and laboratory 72 hours prior to expected time for operations requiring testing/inspection services.
5. Employ services of an independent qualified testing laboratory and pay for additional samples, tests, and inspections required by Contractor beyond specified requirements.
6. Arrange with Owner's agency and pay for additional samples, tests, and inspections required by Contractor beyond specified requirements.

E. Re-testing required because of non-conformance to specified requirements shall be performed by the same agency on instructions by Architect/Engineer. Payment for re testing will be charged to the Contractor by deducting testing charges from the Contract Sum.

3.5 MANUFACTURERS' FIELD SERVICES

A. When specified in individual specification sections, require material or product suppliers or manufacturers to provide qualified staff personnel to observe site conditions, conditions of surfaces and installation, quality of workmanship, start-up of equipment, test, adjust and balance of equipment as applicable, and to initiate instructions when necessary.

B. Submit qualifications of observer to Architect/Engineer 30 days in advance of required observations.
1. Observer subject to approval of Architect/Engineer.

C. Report observations and site decisions or instructions given to applicators or installers that are supplemental or contrary to manufacturers' written instructions.

3.6 DEFECT ASSESSMENT

A. Replace Work or portions of the Work not conforming to specified requirements.

B. If, in the opinion of Architect/Engineer, it is not practical to remove and replace the Work, Architect/Engineer will direct an appropriate remedy or adjust payment.

END OF SECTION 01 40 00

SECTION 01 45 23 – TESTING AND INSPECTION SERVICES

PART 1 - GENERAL

1.1 TESTING AGENCY

A. The Owner shall engage and pay for an independent testing agency to conduct all testing and inspection services described below.

1.2 SPECIAL TESTING AND INSPECTIONS

A. All Special Inspections, including steel, concrete, masonry construction, etc., are to be conducted as required in Section 1704 of the 2020 Building Code of New York State, "Special Inspections and Tests, Contractor Responsibility and Structural Observation". The Owner or the Owner's agent shall hire an approved Special Inspections Agent to perform any and all required inspections, testing of materials or preparation of resulting reports. The Contractor is to coordinate with and provide access to, the Special Inspections Agent. The Contractor is to comply with all his/her responsibilities outlined in the referenced 2020 Building Code of New York State section.

PART 2 – PRODUCTS (Not Used)

PART 3 – EXECUTION (Not Used)

END OF SECTION 01 45 23

SECTION 01 50 00 - TEMPORARY FACILITIES AND CONTROLS

PART 1 - GENERAL

1.1 Related Documents: The Contract Documents apply to work specified in this Section. Consult them in detail for applicable instructions.

1.2 Definitions: Specific administrative and procedural minimum actions are specified in this Section, as extension of provisions in General Conditions and other Contract Documents. These requirements have been included for special purposes as indicated. Nothing in this Section is intended to limit types and amounts of temporary work required, and no omission from this Section will be recognized as an indication by the architect that such temporary activity is not required for successful completion of the work and compliance with requirements of the Contract Documents.

PART 2 – PRODUCTS (Not Used)

PART 3 – EXECUTION

3.1 Field Offices & Temporary Buildings: Contractor shall provide his own temporary field office, temporary trailer for Owner's representative (Clerk of the Works'), 300 s.f. including heat, air-conditioning, pay phone, copy machine, calculator w/tape, typewriter, plan rack, desk, three chairs, drafting table, stool and 4 drawer file; also construction storage sheds required for his work; such requirements are normally met by provision of trailers. Upon completion of the project, remove such facilities and restore previously occupied areas to the project, remove such facilities and restore previously occupied areas to the conditions in which they were found at the start of the Contract (unless improvements are indicated as part of construction work).

A. All temporary offices and construction sheds shall be located and coordinated by the Contractor as approved by the Architect.

B. Any temporary office, storage shed, etc., if installed within 30' of the proposed building or any existing building must be fireproof construction as approved by the by the Owner's insurer. If located beyond 30', non-fireproof construction will be permitted, consistent with local requirements.

C. Each temporary building shall be provided with at least one (1) 2A – 10BC fire extinguisher.

3.2 Temporary Heating and Ventilation:

A. Contractor shall, at his own cost and expense, furnish all temporary heat and ventilation during the progress of the work for use of all trades, until final acceptance of the Project. Mechanical Contractor shall be responsible for proper and safe storage and

handling of equipment and fuel for temporary heat and ventilation, paying for operating costs.

B. Provide and maintain in good order temporary heating and adequate ventilation for all testing operations and the maintenance of working conditions throughout the building, buildings, or portions thereof.

1. So that at no time shall the space temperature be lower than 40F when required to protect improvements in place.
2. As required and called for in the Technical Specification for various branches of the work and spaces where such work is being done.
3. As recommended by the various manufacturers for first-class workmanship for all respective trades.

C. Arrange for safe and proper installation of heating and ventilation equipment and methods, maintenance, and proper conduction of heat, flue gases, and exhaust fumes from apparatus to the exterior. Temporary heating and ventilation shall be controlled carefully to maintain appropriate conditions, and are the complete responsibility of the Contractor, including all costs thereof.

D. No fittings or components, intended for use in the finished building, shall be uses for provision of temporary heat or ventilation, prior to completion and acceptance of the Architect of the entire building heating and ventilating system and all controls.

E. Temporary heating shall be provided only by approved portable propane heaters or as otherwise approved by Architect. Heaters shall be complete units, with operating controls and safety controls.

F. Enclose all openings by means of temporary doors, glazed windows, plywood, fireproofed canvas, fire-retardant treated and reinforced polyethylene, or approved materials properly stretched and/or secured over exterior openings in the proper shape for maintaining heating and ventilation and shall see that the building, buildings, or portions thereof are kept properly enclosed at all times and as required during the period in which the temporary heating and ventilation system is in operation.

G. Clean up any soot, soiled areas, and damage from temporary heating and ventilation operations.

H. Fuel for temporary heating shall be stored under lock and key outside of the building in a safe location and manner, and the fuel containers safeguarded against tampering, leakage, and combustion.

3.3 Temporary Enclosures and Protection: Contractor shall be responsible for furnishing, erecting, maintaining, and removing all temporary enclosures necessary in order to maintain proper temperatures or humidities for the work, or for the protection thereof. Provide

temporary doors in enclosures, for ease and safety of exit. The Contractor shall be responsible for protecting existing work form damage during progress of construction and for correction of any damage caused.

3.4 Temporary Drainage of Waste, Ground and Storm Water: Disposal in satisfactory manner, by pumping or bailing and by conveying systems, to permit no standing water at anytime on structure, temporary works, stored materials, or sub grade, is the responsibility of the Contractor. He shall at all times, at his own expense, protect and safeguard the safety, stability and integrity of temporary works, construction, equipment and materials. The Contractor shall provide, at his own expense, whatever pumping, bailing, or conveying may be required to keep his (and his subcontractor's) excavations dry).

3.5 Ice and Snow Removal: Contractor shall supply labor and equipment necessary to keep all work areas around buildings, including roofs, walls, roads, et., free from ice and snow during work operations, for material deliveries, for equipment delivery and removal, and for safe access and egress.

3.6 Project Sign: Contractor shall provide a project identification sign where directed by Architect: sign shall be 6' – 0" x 8' –0" x ¾" thick exterior grade plywood bolted to wood posts extended 4' – 0" below grade and securely braced. Architect will furnish layout of sign. All lettering shall be performed by a journeymen sign painter.

A. Allow no other sign or advertising of any type on the jobsite except as specifically approved by the Architect.

3.7 Fire Extinguisher: Contractor shall provide types, sizes, numbers and locations as would be reasonably effective in extinguishing fires during early stages, by personnel at project site. Provide Type A extinguishers at locations of low-potential for either electrical or grease-oil-flammable liquids fires; provide Type ABC dry chemical extinguishers at other locations; comply with recommendations of NFPA No. 10. Post warning and quick-instructions at each extinguisher location, and instruct all personnel at project site, at time of their first arrival, on proper use of extinguishers and other available facilities at project site.

3.8 Watchman Service: At Contractor's option, provide watchman service, when necessary, throughout the period of construction, to protect the work, stored materials and temporary structures located on the premises, and to prevent unauthorized person from entering the construction site.

END OF SECTION 01 50 00

SECTION 01 60 00 - PRODUCT REQUIREMENTS

PART 1 - GENERAL

1.1 SECTION INCLUDES:

A. Transportation, handling, storage and protection.

B. Product option requirements.

C. Substitution limitations and procedures.

D. Spare parts and maintenance materials.

PART 2 - PRODUCTS

2.1 NEW PRODUCTS

A. Provide new products unless specifically required or permitted by the Contract Documents.

2.2 PRODUCT OPTIONS

A. Products Specified by Reference Standards or by Description Only: Use any product meeting those standards or description.

B. Products Specified by Naming One or More Manufacturers: Use a product of one of the manufacturers named and meeting specifications, no options or substitutions allowed.

C. Products Specified by Naming One or More Manufacturers with a Provision for Substitutions: Submit a request for substitution for any manufacturer not named.

2.3 SPARE PARTS AND MAINTENANCE PRODUCTS

A. Provide spare parts, maintenance, and extra products of types and in quantities specified in individual specification sections.

B. Deliver to Project site; obtain receipt prior to final payment.

PART 3 - EXECUTION

3.1 SUBSTITUTION PROCEDURES

A. Instructions to Bidders specify time restrictions for submitting requests for substitutions during the bidding period. Comply with requirements specified in this section.

B. Architect/Engineer will consider requests for substitutions only within 30 days after date of Agreement.

C. Substitutions may be considered when a product becomes unavailable through no fault of the Construction Manager.

D. Document each request with complete data substantiating compliance of proposed substitution with Contract Documents.

E. A request for substitution constitutes a representation that the submitter:
   1. Has investigated proposed product and determined that it meets or exceeds the quality level of the specified product.
   2. Will provide the same warranty for the substitution as for the specified product.
   3. Will coordinate installation and make changes to other Work which may be required for the Work to be complete with no additional cost to Owner.
   4. Waives claims for additional costs or time extension which may subsequently become apparent.

F. Substitutions will not be considered when they are indicated or implied on shop drawing or product data submittals, without separate written request, or when acceptance will require revision to the Contract Documents.

G. Substitution Submittal Procedure:
   1. Submit three copies of request for substitution for consideration. Limit each request to one proposed substitution.
   2. Submit shop drawings, product data, and certified test results attesting to the proposed product equivalence. Burden of proof is on proposer.
   3. The Architect/Engineer will notify Construction Manager in writing of decision to accept or reject request.

3.2 TRANSPORTATION AND HANDLING

A. Coordinate schedule of product delivery to designated prepared areas in order to minimize site storage time and potential damage to stored materials.

B. Transport and handle products in accordance with manufacturer's instructions.

C. Transport materials in covered trucks to prevent contamination of product and littering of surrounding areas.

D. Promptly inspect shipments to ensure that products comply with requirements, quantities are correct, and products are undamaged.

E. Provide equipment and personnel to handle products by methods to prevent soiling, disfigurement, or damage.

F. Arrange for the return of packing materials, such as wood pallets, where economically feasible.

3.3 STORAGE AND PROTECTION

A. Designate receiving/storage areas for incoming products so that they are delivered according to installation schedule and placed convenient to work area in order to minimize waste due to excessive materials handling and misapplication.

B. Store and protect products in accordance with manufacturers' instructions.

C. Store with seals and labels intact and legible.

D. Store sensitive products in weather tight, climate controlled, enclosures in an environment favorable to product.

E. For exterior storage of fabricated products, place on sloped supports above ground.

F. Cover products subject to deterioration with impervious sheet covering. Provide

ventilation to prevent condensation and degradation of products.

G. Prevent contact with material that may cause corrosion, discoloration, or staining.

H. Provide equipment and personnel to store products by methods to prevent soiling, disfigurement, or damage.

I. Arrange storage of products to permit access for inspection. Periodically inspect to verify products are undamaged and are maintained in acceptable condition.

END OF SECTION 01 60 00

SECTION 01 73 00 - EXECUTION

PART 1 - GENERAL

1.1 SUMMARY

A. Section includes general administrative and procedural requirements governing execution of the Work including, but not limited to, the following:
   1. Construction layout.
   2. Field engineering and surveying.
   3. Installation of the Work.
   4. Progress cleaning.
   5. Starting and adjusting.
   6. Protection of installed construction.
   7. Correction of the Work.

B. Related Sections:
   1. Section 01 77 00 "Closeout Procedures" for submitting Project Record Documents, recording of Owner-accepted deviations from indicated lines and levels, and final cleaning.

1.2 INFORMATIONAL SUBMITTALS

A. Certificates: Submit certificate signed by land surveyor certifying that location and elevation of improvements comply with requirements.

B. Landfill Receipts: Submit copy of receipts issued by a landfill facility, licensed to accept hazardous materials, for hazardous waste disposal.

C. Certified Surveys: Submit two copies signed by land surveyor.

D. Final Property Survey: Submit 2 copies showing the Work performed and record survey data.

1.3 QUALITY ASSURANCE

A. Land Surveyor Qualifications: A professional land surveyor who is legally qualified to practice in jurisdiction where Project is located and who is experienced in providing land-surveying services of the kind indicated.

PART 2 - PRODUCTS

2.1 MATERIALS

A. General: Comply with requirements specified in other Sections.

PART 3 - EXECUTION

3.1 EXAMINATION

A. Existing Conditions: The existence and location of underground and other utilities and construction indicated as existing are not guaranteed. Before beginning sitework, investigate and verify the existence and location of underground utilities and other construction affecting the Work.
   1. Before construction, verify the location and invert elevation at points of connection of sanitary sewer, storm sewer, and water-service piping; underground electrical services, and other utilities.
   2. Furnish location data for work related to Project that must be performed by public utilities serving Project site.

B. Examination and Acceptance of Conditions: Before proceeding with each component of the Work, examine substrates, areas, and conditions, with Installer or Applicator present where indicated, for compliance with requirements for installation tolerances and other conditions affecting performance. Record observations.
   1. Verify compatibility with and suitability of substrates, including compatibility with existing finishes or primers.
   2. Examine roughing-in for mechanical and electrical systems to verify actual locations of connections before equipment and fixture installation.
   3. Examine walls, floors, and roofs for suitable conditions where products and systems are to be installed.
   4. Proceed with installation only after unsatisfactory conditions have been corrected. Proceeding with the Work indicates acceptance of surfaces and conditions.

3.2 PREPARATION

A. Existing Utility Information: Furnish information to local utility and Owner that is necessary to adjust, move, or relocate existing utility structures, utility poles, lines, services, or other utility appurtenances located in or affected by construction. Coordinate with authorities having jurisdiction.

B. Field Measurements: Take field measurements as required to fit the Work properly. Recheck measurements before installing each product. Where portions of the Work are indicated to fit to other construction, verify dimensions of other construction by field measurements before fabrication. Coordinate fabrication schedule with construction progress to avoid delaying the Work.

C. Space Requirements: Verify space requirements and dimensions of items shown diagrammatically on Drawings.

D. Review of Contract Documents and Field Conditions: Immediately on discovery of the need for clarification of the Contract Documents caused by differing field conditions outside the control of the Contractor, submit a request for information to Architect according to requirements in Division 01 Section "Project Management and Coordination."

3.3 CONSTRUCTION LAYOUT

A. Verification: Before proceeding to lay out the Work, verify layout information shown on Drawings, in relation to the property survey and existing benchmarks. If discrepancies are discovered, notify Architect promptly.

B. General: Engage a land surveyor to lay out the Work using accepted surveying practices.
   1. Establish benchmarks and control points to set lines and levels at each story of construction and elsewhere as needed to locate each element of Project.
   2. Establish dimensions within tolerances indicated. Do not scale Drawings to obtain required dimensions.
   3. Notify Architect when deviations from required lines and levels exceed allowable tolerances.

C. Site Improvements: Locate and lay out site improvements, including pavements, grading, fill and topsoil placement, utility slopes, and rim and invert elevations.

D. Building Lines and Levels: Locate and lay out control lines and levels for structures, building foundations, column grids, and floor levels, including those required for mechanical and electrical work. Transfer survey markings and elevations for use with control lines and levels. Level foundations and piers from two or more locations.

E. Record Log: Maintain a log of layout control work. Record deviations from required lines and levels. Include beginning and ending dates and times of surveys, weather conditions, name and duty of each survey party member, and types of instruments and tapes used. Make the log available for reference by Architect and Owner.

3.4 FIELD ENGINEERING

A. Reference Points: Locate existing permanent benchmarks, control points, and similar reference points before beginning the Work. Preserve and protect permanent benchmarks and control points during construction operations.

B. Benchmarks: Establish and maintain a minimum of two permanent benchmarks on Project site, referenced to data established by survey control points. Comply with authorities having jurisdiction for type and size of benchmark.
   1. Record benchmark locations, with horizontal and vertical data, on Project Record Documents.

C. Final Property Survey: Engage a land surveyor to prepare a final property survey showing significant features (real property) for Project. Include on the survey a certification, signed by land surveyor, that principal metes, bounds, lines, and levels of Project are accurately positioned as shown on the survey.
   1. Recording: At Substantial Completion, have the final property survey recorded by or with authorities having jurisdiction as the official "property survey."

3.5 INSTALLATION

A. General: Locate the Work and components of the Work accurately, in correct alignment and elevation, as indicated.
   1. Make vertical work plumb and make horizontal work level.
   2. Where space is limited, install components to maximize space available for maintenance and ease of removal for replacement.
   3. Conceal pipes, ducts, and wiring in finished areas, unless otherwise indicated.

B. Comply with manufacturer's written instructions and recommendations for installing products in applications indicated.

C. Install products at the time and under conditions that will ensure the best possible results. Maintain conditions required for product performance until Substantial Completion.

D. Conduct construction operations so no part of the Work is subjected to damaging operations or loading in excess of that expected during normal conditions of occupancy.

E. Attachment: Provide blocking and attachment plates and anchors and fasteners of adequate size and number to securely anchor each component in place, accurately located and aligned with other portions of the Work. Where size and type of attachments are not indicated, verify size and type required for load conditions.

F. Joints: Make joints of uniform width. Where joint locations in exposed work are not indicated, arrange joints for the best visual effect. Fit exposed connections together to form hairline joints.

G. Hazardous Materials: Use products, cleaners, and installation materials that are not considered hazardous.

3.6 PROGRESS CLEANING

A. General: Clean Project site and work areas daily, including common areas. Enforce requirements strictly. Dispose of materials lawfully.
   1. Comply with requirements in NFPA 241 for removal of combustible waste materials and debris.
   2. Do not hold waste materials more than seven days during normal weather or three days if the temperature is expected to rise above 80 deg F.
   3. Containerize hazardous and unsanitary waste materials separately from other waste. Mark containers appropriately and dispose of legally, according to regulations.

B. Site: Maintain Project site free of waste materials and debris.

C. Work Areas: Clean areas where work is in progress to the level of cleanliness necessary for proper execution of the Work.
   1. Remove liquid spills promptly.
   2. Where dust would impair proper execution of the Work, broom-clean or vacuum the entire work area, as appropriate.

D. Installed Work: Keep installed work clean. Clean installed surfaces according to written instructions of manufacturer or fabricator of product installed, using only cleaning materials specifically recommended. If specific cleaning materials are not recommended, use cleaning materials that are not hazardous to health or property and that will not damage exposed surfaces.

E. Concealed Spaces: Remove debris from concealed spaces before enclosing the space.

F. Exposed Surfaces in Finished Areas: Clean exposed surfaces and protect as necessary to ensure freedom from damage and deterioration at time of Substantial Completion.

G. Waste Disposal: Do not bury or burn waste materials on-site. Do not wash waste materials down sewers or into waterways.
   1. Any effluent or excess runoff from masonry cleaning must be treated and released in accordance with all federal state and local requirements.

H. During handling and installation, clean and protect construction in progress and adjoining materials already in place. Apply protective covering where required to ensure protection from damage or deterioration at Substantial Completion.

I. Clean and provide maintenance on completed construction as frequently as necessary through the remainder of the construction period. Adjust and lubricate operable components to ensure operability without damaging effects.

J. Limiting Exposures: Supervise construction operations to assure that no part of the construction, completed or in progress, is subject to harmful, dangerous, damaging, or otherwise deleterious exposure during the construction period.

3.7 STARTING AND ADJUSTING

A. Start equipment and operating components to confirm proper operation. Remove malfunctioning units, replace with new units, and retest.

B. Adjust equipment for proper operation. Adjust operating components for proper operation without binding.

C. Test each piece of equipment to verify proper operation. Test and adjust controls and safeties. Replace damaged and malfunctioning controls and equipment.

D. Manufacturer's Field Service: Comply with qualification requirements in Division 01 Section "Quality Requirements."

3.8 PROTECTION OF INSTALLED CONSTRUCTION

A. Provide final protection and maintain conditions that ensure installed Work is without damage or deterioration at time of Substantial Completion.

B. Comply with manufacturer's written instructions for temperature and relative humidity.

C. Only wheeled equipment having non-marking wheels shall be allowed on quarry tile and Backroom floors.

3.9 CORRECTION OF THE WORK

A. Repair or remove and replace defective construction. Restore damaged substrates and finishes.
   1. Repairing includes replacing defective parts, refinishing damaged surfaces, touching up with matching materials, and properly adjusting operating equipment.

B. Restore permanent facilities used during construction to their specified condition.

C. Remove and replace damaged surfaces that are exposed to view if surfaces cannot be repaired without visible evidence of repair.

D. Repair components that do not operate properly. Remove and replace operating components that cannot be repaired.

E. Remove and replace chipped, scratched, and broken glass or reflective surfaces.

END OF SECTION 017300

SECTION 01 73 20 – SELECTIVE DEMOLITION

PART 1 - GENERAL

1.1 RELATED DOCUMENTS

A. Drawings and general provisions of the Contract, including General and Supplementary Conditions, apply to this Section.

1.2 SUMMARY

A. This Section includes the following:
1. Demolition and removal of selected portions of a building or structure.
2. Repair procedures for selective demolition operations.

1.3 DEFINITIONS

A. Remove: Detach items from existing construction and legally dispose of them off-site, unless indicated to be removed and salvaged or removed and reinstalled.

B. Remove and Salvage: Detach items from existing construction and deliver them to Owner ready for reuse.

C. Remove and Reinstall: Detach items from existing construction, prepare them for reuse, and reinstall them where indicated.

D. Existing to Remain: Existing items of construction that are not to be removed and that are not otherwise indicated to be removed, removed and salvaged, or removed and reinstalled.

1.4 MATERIALS OWNERSHIP

A. Except for items or materials indicated to be reused, salvaged, reinstalled, or otherwise indicated to remain Owner’s property, demolished materials shall become Contractor’s property and shall be removed from Project site.

1.5 SUBMITTALS

A. Qualification Data: For firms and persons specified in "Quality Assurance" Article to demonstrate their capabilities and experience. Include lists of completed projects with project names and addresses, names and addresses of architect and owners, and other information specified.

B. Proposed Dust-Control and Noise-Control Measures: Submit statement or drawing that indicates the measures proposed for use, proposed locations, and proposed time frame for their operation. Identify options if proposed measures are later determined to be inadequate.

C. Schedule of Selective Demolition Activities: Indicate the following:

1. Detailed sequence of selective demolition and removal work, with starting and ending

dates for each activity. Ensure Owner's on-site operations are uninterrupted.
2. Interruption of utility services.
3. Coordination for shutoff, capping, and continuation of utility services.
4. Locations of temporary partitions and means of egress
5. Coordination of Owner's continuing occupancy of portions of existing building and of Owner's partial occupancy of completed Work.

D. Inventory: After selective demolition is complete, submit a list of items that have been removed and salvaged.

E. Predemolition Photographs: Show existing conditions of adjoining construction and site improvements, including finish surfaces, that might be misconstrued as damage caused by selective demolition operations. Submit before Work begins.

1.6 QUALITY ASSURANCE

A. Demolition Firm Qualifications: An experienced firm that has specialized in demolition work similar in material and extent to that indicated for this Project.

B. Regulatory Requirements: Comply with governing EPA notification regulations before beginning selective demolition. Comply with hauling and disposal regulations of authorities having jurisdiction.

C. Standards: Comply with ANSI A10.6 and NFPA 241.

D. Predemolition Conference: Conduct conference at Project site to comply with requirements in Division 1 Section "Project Management and Coordination.' Review methods and procedures related to selective demolition including, but not limited to, the following:

1. Inspect and discuss condition of construction to be selectively demolished.

2. Review structural load limitations of existing structure.

3. Review and finalize selective demolition schedule and verify availability of materials, demolition personnel, equipment, and facilities needed to make progress and avoid delays.

4. Review requirements of work performed by other trades that rely on substrates exposed by selective demolition operations.

1.7 PROJECT CONDITIONS

A. Maintain access to public walkways and other adjacent occupied or used facilities.

1. Do not close or obstruct public walkways or other occupied or used facilities without written permission from authorities having jurisdiction.

B. Owner assumes no responsibility for condition of areas to be selectively demolished.

C. Storage or sale of removed items or materials on-site will not be permitted.

D. Utility Service: Maintain existing utilities indicated to remain in service and protect them against damage during selective demolition operations.

PART 2 – PRODUCTS

2.1 REPAIR AND RESTORATION MATERIALS

A. Use repair and restoration materials identical to existing materials.
   1. If identical materials are unavailable or cannot be used for exposed surfaces, use materials that visually match existing adjacent surfaces to the fullest extent possible.
   2. Use materials whose installed performance equals or surpasses that of existing materials.

B. Comply with material and installation requirements specified in individual Specification Sections.

PART 3 - EXECUTION

3.1 EXAMINATION

A. Verify that utilities have been disconnected and capped.

B. Survey existing conditions and correlate with requirement indicated to determine extent of selective demolition required.

C. Inventory and record the condition of items to be removed and reinstalled and items to be removed and salvaged.

D. When unanticipated mechanical, electrical, or structural elements that conflict with intended function or design are encountered, investigate and measure the nature and extent of conflict. Promptly submit a written report to Architect and Engineer.

E. Perform surveys as the Work progresses to detect hazards resulting from selective demolition activities.

3.2 UTILITY SERVICES

A. Existing Utilities: Maintain services indicated to remain and protect them against damage during selective demolition operations.

B. Do not interrupt existing utilities serving occupied or operating facilities unless authorized in writing by Owner and authorities having jurisdiction. Provide temporary services during interruptions to existing utilities, as acceptable to Owner and to authorities having jurisdiction.

C. Utility Requirements: Locate, identify, disconnect, and seal or cap off indicated utilities serving areas to be selectively demolished.
   1. Arrange to shut off indicated utilities with utility companies.
   2. If utility services are required to be removed, relocated, or abandoned, before proceeding with selective demolition provide temporary utilities that bypass area of selective demolition and that maintain continuity of service to other parts of building.

3. Cut off pipe or conduit in walls or partitions to be removed. Cap, valve, or plug and seal remaining portion of pipe or conduit after bypassing.

3.3 PREPARATION

A. Dangerous Materials: Drain, purge, or otherwise remove, collect, and dispose of chemicals, gases, explosives, acids, flammables, or other dangerous materials before proceeding with selective demolition operations.

B. Site Access and Temporary Controls: Conduct selective demolition and debris-removal operations to ensure minimum interference with roads, streets, walks, walkways, and other adjacent occupied and used facilities.
   1. Do not close or obstruct streets, walks, walkways, or other adjacent occupied or used facilities without permission from Owner and authorities having jurisdiction. Provide alternate routes around closed or obstructed traffic ways if required by governing regulations.
   2. Erect temporary protection, such as walks, fences, railings, canopies, and covered passageways, where required by authorities having jurisdiction.
   3. Protect existing site improvements, appurtenances, and landscaping to remain.

C. Temporary Facilities: Provide temporary barricades and other protection required to prevent Injury to people and damage to adjacent buildings and facilities to remain.
   1. Provide protection to ensure safe passage of people around selective demolition area and to and from occupied portions of building.
   2. Provide temporary weather protection, during interval between selective demolition of existing construction on exterior surfaces and new construction, to prevent water leakage and damage to structure and interior areas.
   3. Protect walls, ceilings, floors, and other existing finish work that are to remain or that are exposed during selective demolition operations.
   4. Cover and protect furniture, furnishings, and equipment that have not been removed.

D. Temporary Enclosures: Provide temporary enclosures for protection of existing building and construction, in progress and completed, from exposure, foul weather, other construction operations, and similar activities. Provide temporary weathertight enclosure for building exterior.
   1. Where heating or cooling is needed and permanent enclosure is not complete, provide insulated temporary enclosures. Coordinate enclosure with ventilating and material drying or curing requirements to avoid dangerous conditions and effects.

E. Temporary Partitions: Erect and maintain dustproof partitions and temporary enclosures to limit dust and dirt migration and to separate areas from fumes and noise.

3.4 POLLUTION CONTROLS

A. Dust Control: Use water mist, temporary enclosures, and other suitable methods to limit spread of dust and dirt. Comply with governing environmental-protection regulations.
   1. Do not use water when it may damage existing construction or create hazardous or objectionable conditions, such as ice, flooding, and pollution.

2. Wet mop floors to eliminate trackable dirt and wipe down walls and doors of demolition enclosure.

B. Disposal: Remove and transport debris in a manner that will prevent spillage on adjacent surfaces and areas.

C. Cleaning: Clean adjacent structures and improvements of dust, dirt, and debris caused by selective demolition operations. Return adjacent areas to condition existing before selective demolition operations began.

3.5 SELECTIVE DEMOLITION

A. General: Demolish and remove existing construction only to the extent required by new construction and as indicated. Use methods required to complete the Work within limitations of governing regulations and as follows:

1. Proceed with selective demolition systematically, from higher to lower level, Complete selective demolition operations above each floor or tier before disturbing supporting members on the next lower level.

2. Neatly cut openings and holes plumb, square, and true to dimensions required. Use cutting methods least likely to damage construction to remain or adjoining construction. Use hand tools or small power tools designed for sawing or grinding, not hammering and chopping, to minimize disturbance of adjacent surfaces. Temporarily cover openings to remain.

3. Cut or drill from the exposed or finished side into concealed surfaces to avoid marring existing finished surfaces.

4. Do not use cutting torches until work area is cleared of flammable materials. At concealed spaces, such as duct and pipe interiors, verify condition and contents of hidden space before starling flame-cutting operations. Maintain portable fire-suppression devices during flame-cutting operations.

5. Maintain adequate ventilation when using cutting torches.

6. Remove decayed, vermin-infested, or otherwise dangerous or unsuitable materials and promptly dispose of off-site.

7. Remove structural framing members and lower to ground by method suitable to avoid free fall and to prevent ground Impact or dust generation.

8. Locate selective demolition equipment and remove debris and materials so as not to impose excessive loads on supporting walls, floors, or framing.

9. Dispose of demolished items and materials promptly.

B. Existing Facilities: Comply with requirements for using and protecting stairs, walkways, building entries, and other building facilities during selective demolition operations.

C. Removed and Salvaged Items: Comply with the following:
1. Clean salvaged items.
2. Pack or crate items after cleaning. Identify contents of containers.

3. Store items in a secure area until delivery to Owner.
4. Transport items to designated storage area.
5. Protect items from damage during transport and storage.

D. Existing Items to Remain: Protect construction indicated to remain against damage and soiling during selective demolition. When permitted by Owner, items may be removed to a suitable, protected storage location during selective demolition, cleaned and reinstalled in their original locations after selective demolition operations are complete.

3.6 PATCHING AND REPAIRS

A. General: Promptly repair damage to adjacent construction caused by selective demolition operations.

B. Repairs: Where repairs to existing surfaces are required, patch to produce surfaces suitable for new materials.
1. Completely fill holes and depressions in existing masonry walls that are to remain with an approved masonry patching material applied according to manufacturer's written recommendations.

C. Finishes: Restore exposed finishes of patched areas and extend restoration into adjoining construction in a manner that eliminates evidence of patching and refinishing.

3.7 DISPOSAL OF DEMOLISHED MATERIALS

A. General: Promptly dispose of demolished materials. Do not allow demolished materials to accumulate on-site.

B. Burning: Do not burn demolished materials.

C. Disposal: Transport demolished materials off Owner's property and legally dispose of them.

END OF SECTION 01 73 20

SECTION 01 73 29 - CUTTING AND PATCHING

PART 1 - GENERAL

1.1 SUMMARY

A. This Section includes procedural requirements for cutting and patching.

1.2 DEFINITIONS

A. Cutting: Removal of in-place construction necessary to permit installation or performance of other Work.

B. Patching: Fitting and repair work required to restore surfaces to original conditions after installation of other Work.

1.3 QUALITY ASSURANCE

A. Structural Elements: Do not cut and patch structural elements in a manner that could change their load-carrying capacity or load-deflection ratio.

B. Operational Elements: Do not cut and patch operating elements and related components in a manner that results in reducing their capacity to perform as intended or that results in increased maintenance or decreased operational life or safety.

C. Miscellaneous Elements: Do not cut and patch miscellaneous elements or related components in a manner that could change their load-carrying capacity, that results in reducing their capacity to perform as intended, or that results in increased maintenance or decreased operational life or safety. Miscellaneous elements include the following:
   1. Water, moisture, or vapor barriers.
   2. Membranes and flashings.
   3. Equipment supports.

D. Visual Requirements: Do not cut and patch construction in a manner that results in visual evidence of cutting and patching. Do not cut and patch construction exposed on the exterior or in occupied spaces in a manner that would, in Architect's opinion, reduce the building's aesthetic qualities. Remove and replace construction that has been cut and patched in a visually unsatisfactory manner.

PART 2 – PRODUCTS

2.1 MATERIALS

A. General: Comply with requirements specified in other Sections.

B. In-Place Materials: Use materials identical to in-place materials. For exposed surfaces, use materials that visually match in-place adjacent surfaces to the fullest extent possible.
   1. If identical materials are unavailable or cannot be used, use materials that, when installed, will match the visual and functional performance of in-place materials

PART 3 – EXECUTION

3.1 EXAMINATION

A. Examine surfaces to be cut and patched and conditions under which cutting and patching are to be performed.
   1. Compatibility: Before patching, verify compatibility with and suitability of substrates, including compatibility with in-place finishes or primers.
   2. Proceed with installation only after unsafe or unsatisfactory conditions have been corrected.

3.2 PREPARATION

A. Temporary Support: Provide temporary support of Work to be cut.

B. Protection: Protect in-place construction during cutting and patching to prevent damage. Provide protection from adverse weather conditions for portions of Project that might be exposed during cutting and patching operations.

C. Adjoining Areas: Avoid interference with use of adjoining areas or interruption of free passage to adjoining areas.

3.3 PERFORMANCE

A. General: Employ skilled workers to perform cutting and patching. Proceed with cutting and patching at the earliest feasible time, and complete without delay.
   1. Cut in-place construction to provide for installation of other components or performance of other construction, and subsequently patch as required to restore surfaces to their original condition.

B. Cutting: Cut in-place construction by sawing, drilling, breaking, chipping, grinding, and similar operations, including excavation, using methods least likely to damage elements retained or adjoining construction. If possible, review proposed procedures with original Installer; comply with original Installer's written recommendations.
   1. In general, use hand or small power tools designed for sawing and grinding, not hammering and chopping. Cut holes and slots as small as possible, neatly to size required, and with minimum disturbance of adjacent surfaces. Temporarily cover openings when not in use.
   2. Concrete/Masonry: Cut using a cutting machine, such as an abrasive saw or a diamond-core drill.

3. Proceed with patching after construction operations requiring cutting are complete.

C. Patching: Patch construction by filling, repairing, refinishing, closing up, and similar operations following performance of other Work. Patch with durable seams that are as invisible as possible. Provide materials and comply with installation requirements specified in other Sections.
   1. Inspection: Where feasible, test and inspect patched areas after completion to demonstrate integrity of installation.
   2. Exposed Finishes: Restore exposed finishes of patched areas and extend finish restoration into retained adjoining construction in a manner that will eliminate evidence of patching and refinishing.
      a. Clean piping, conduit, and similar features before applying paint or other finishing materials.
      b. Restore damaged pipe covering to its original condition.
   3. Exterior Building Enclosure: Patch components in a manner that restores enclosure to a weathertight condition,

D. Cleaning: Clean areas and spaces where cutting and patching are performed. Completely remove paint, mortar, oils, putty, and similar materials.

END OF SECTION 01 73 29

SECTION 01 74 19 – CONSTRUCTION WASTE MANAGEMENT

PART 1 – GENERAL

1.1 SUMMARY

A. This Section includes administrative and procedural requirements for the following:

1. Disposing of non-hazardous waste.

B. The General Contractor shall be responsible for the development, coordination, and implementation of a construction waste management plan in accordance with this section.

1.2 DEFINITIONS

A. Construction Waste: Building and site improvement materials and other solid waste resulting from construction, remodeling, renovation, or repair operations. Construction waste includes packaging.

B. Demolition Waste: Building and site improvement materials resulting from demolition or selective demolition operations.

C. Disposal: Removal off-site of demolition and construction waste and subsequent sale, recycling, reuse, or deposit in landfill or incinerator acceptable to authorities having jurisdiction.

D. Recycle: Recovery of demolition or construction waste for subsequent processing in preparation for reuse,

E. Salvage: Recovery of demolition or construction waste and subsequent sale or reuse in another facility.

F. Salvage and Reuse: Recovery of demolition or construction waste and subsequent incorporation into the Work.

1.3 SUBMITTALS

A. Waste Reduction Progress Reports: Concurrent with each Application for Payment, submit three (3) copies of report. Include separate reports for demolition and construction waste. Include the following information:
1. Material category.
2. Generation point of waste.
3. Total quantity of waste in tons.
4. Quantity of waste salvaged, both estimated and actual in tons.
5. Quantity of waste recycled, both estimated and actual in tons.
6. Total quantity of waste recovered (salvaged plus recycled) in tons.
7. Total quantity of waste recovered (salvaged plus recycled) as a percentage of total waste.

B. Waste Reduction Calculations: Before request for Substantial Completion, submit three (3) copies of calculated end-of-Project rates for salvage, recycling, and disposal as a percentage of total waste generated by the Work.

C. Records of Donations: Indicate receipt and acceptance of salvageable waste donated to individuals and organizations. Indicate whether organization is tax exempt.

D. Records of Sales: Indicate receipt and acceptance of salvageable waste sold to individuals and organizations. Indicate whether organization is tax exempt.

E. Recycling and Processing Facility Records: Indicate receipt and acceptance of recyclable waste by recycling and processing facilities licensed to accept them. Include manifests, weight tickets, receipts, and invoices.

F. Landfill and Incinerator Disposal Records: Indicate receipt and acceptance of waste by landfills and incinerator facilities licensed to accept them. Include manifests, weight tickets, receipts, and invoices.

1.4 WASTE MANAGEMENT PLAN

A. General: Develop plan consisting of waste identification and waste reduction work plan. Indicate quantities by weight or volume, but use same units of measure throughout waste management plan,

B. Waste Identification: Indicate anticipated types and quantities of demolition and construction waste generated by the Work. Include estimated quantities and assumptions for estimates.

C. Waste Reduction Work Plan: List each type of waste and whether it will be salvaged, recycled, or disposed of in landfill or incinerator, Include points of waste generation, total quantity of each type of waste, quantity for each means of recovery, and handling and transportation procedures.

1. Salvaged Materials for Reuse: For materials that will be salvaged and reused In this Project, describe methods for preparing salvaged materials before incorporation into the Work.

2. Salvaged Materials for Sale: For materials that will be sold to individuals and organizations, include list of their names, addresses, and telephone numbers.

3. Salvaged Materials for Donation: For materials that will be donated to individuals and organizations, include list of their names, addresses, and telephone numbers.

4. Recycled Materials: Include list of local receivers and processors and type of recycled materials each will accept. Include names, addresses, and telephone numbers.

5. Disposed Materials: Indicate how and where materials will be disposed of. Include name, address, and telephone number of each landfill and incinerator facility.

6. Handling and Transportation Procedures: Include method that will be used for separating recyclable waste including sizes of containers, container labeling, and designated location on Project site where materials separation will be located.

PART 2 – PRODUCTS (NOT USED)

PART 3 - EXECUTION

3.1 PLAN IMPLEMENTATION

A. General: Implement waste management plan as approved by Architect and Owner's Representative. Provide handling, containers, storage, signage, transportation, and other items as required to implement waste management plan during the entire duration of the Contract

B. Waste Management Coordinator: Engage a waste management coordinator to be responsible for implementing, monitoring, and reporting status of waste management work plan. Coordinator shall be present at Project site full time for duration of Project.

C. Training: Train workers, subcontractors, and suppliers on proper waste management procedures, as appropriate for the Work occurring at Project site.

1. Distribute waste management plan to everyone concerned within five (5) days of submittal return.

2. Distribute waste management plan to entities when they first begin work on-site. Review plan procedures and locations established for salvage, recycling, and disposal.

D. Site Access and Temporary Controls: Conduct waste management operations to ensure minimum interference with roads, streek, walks, walkways, and other adjacent occupied and used facilities.

1. Designate and label specific areas on Project site necessary for separating materials that are to be salvaged, recycled, reused, donated, and sold.

2. Comply with Division 1 Section temporary Facilities and Controls" for controlling dust and dirt, environmental protection, and noise control.

3.2 SALVAGING DEMOLITION WASTE

A. Salvaged Items for Reuse in the Work:
1. Clean salvaged items.
2. Pack or crate items after cleaning. Identify contents of containers.
3. Store items in a secure area until installation.
4. Protect items from damage during transport and storage.
5. Install salvaged items to comply with installation requirements for new materials and equipment. Provide connections, supports, and miscellaneous materials necessary to make items functional for use indicated.

B. Salvaged Items for Sale and Donation: Not permitted on Project site.

C. Salvaged Items for Owner's Use:
1. Clean salvaged items.
2. Pack or crate Items after cleaning. Identify contents of containers.
3. Store items in a secure area until delivery to Owner.
4. Protect items from damage during transport and storage.

3.3 RECYCLING DEMOLITION AND CONSTRUCTION WASTE, GENERAL

A. General: Recycle paper and beverage containers used by on-site workers.

B. Recycling Incentives: Revenues, savings, rebates, tax credits, and other incentives received for recycling waste materials shall be shared equally by Owner and Contractor.

C. Procedures: Separate recyclable waste from other waste materials, trash, and debris. Separate recyclable waste by type at Project site to the maximum extent practical.
   1. Provide appropriately marked containers or bins for controlling recyclable waste until they are removed from Project site. Include list of acceptable and unacceptable materials at each container and bin.
      a. Inspect containers and bins for contamination and remove contaminated materials if found.
   2. Stockpile processed materials on-site without intermixing with other materials. Place, grade, and shape stockpiles to drain surface water. Cover to prevent windblown dust.
   3. Stockpile materials away from construction area. Do not store within drip line of remaining trees.
   4. Store components off the ground and protect from the weather.
   5. Remove recyclable waste off Owner's property and transport to recycling receiver or processor.

3.4 RECYCLING DEMOLITION WASTE

A. Wood Materials: Sort and stack members according to size, type, and length. Separate lumber, engineered wood products, panel products, and treated wood materials.

B. Metals: Separate metals by type.
   1. Remove and dispose of flashings, bolts, nuts, washers, and other rough hardware.

C. Roofing: Separate organic and glass-fiber asphalt shingles and felts, clay roofing materials, and membrane roofing materials. Remove and dispose of nails, staples, and accessories.

3.5 RECYCLING CONSTRUCTION WASTE

A. Packaging:
   1. Cardboard and Boxes: Break down packaging into flat sheets. Bundle and store in a dry location.
   2. Polystyrene Packaging: Separate and bag materials.
   3. Pallets: As much as possible, require deliveries using pallets to remove pallets from Project site. For pallets that remain on-site, break down pallets into component wood pieces and comply with requirements for recycling wood.
   4. Crates: Break down crates into component wood pieces and comply with requirements for recycling wood.

B. Wood Materials:
   1. Clean Cut-Offs of Lumber: Grind or chip into small pieces.
   2. Clean Sawdust: Bag sawdust that does not contain painted or treated wood.

3.6 DISPOSAL OF WASTE

A. General: Except for items or materials to be salvaged, recycled, or otherwise reused, remove waste materials from Project site and legally dispose of them in a landfill or incinerator acceptable to authorities having jurisdiction.
   1. Except as otherwise specified, do not allow waste materials that are to be disposed of accumulate on-site.
   2. Remove and transport debris in a manner that will prevent spillage on adjacent surfaces and areas.

B. Burning: Do not bum waste materials.

C. Disposal: Transport waste materials off Owner’s property and legally dispose of them.

END OF SECTION 01 74 19

SECTION 01 77 00 - CONTRACT CLOSEOUT

PART 1 – GENERAL

1.1 SECTION INCLUDES:

A. Contract closeout includes general requirements near the end of the contract time, in preparation for final acceptance, final payment, normal termination of the contract, occupancy by the Owner, and similar actions evidencing completion of the work.

B. The general requirements for this Section include closeout procedures, final cleaning, project record documents, and operations and maintenance data.

PART 2 - PRODUCTS - NOT USED

PART 3 – EXECUTION

3.1 CLOSEOUT PROCEDURES

A. The Contractor shall comply with the procedures stated in the General Conditions of the Contract for determining the date of substantial completion, final completion, acceptance, and payment.

B. In addition to submittals required by the General Conditions of the Contract, the Contractor shall provide submittals required by governing authorities and shall submit a final statement of accounting.

3.2 FINAL CLEANING

A. Final cleaning shall be performed prior to the final inspection.

B. The Contractor shall be responsible for final cleaning and seeing that the building is in a clean condition when it is turned over to the Owner. At the completion of the work, all subcontractors shall remove all tools, scaffolding, and surplus materials from the site.

C. The Contractor shall clean roofs, gutters, downspouts, and drainage systems.

D. The Contractor shall clean site. Sweep paved areas, rake, clean other surfaces.

3.3 PROJECT RECORD DOCUMENTS

A. Maintain at job site one copy of Contract Documents, Specifications, addenda, bulletins, reviewed shop drawings, change orders, other modifications to the Contract and field test records.

B. Store documents and samples in field office apart from documents used for construction.

C. File documents and samples in accordance with CSI format.

D. Maintain documents in a clean, dry, legible condition and in good order. Do not use record documents for construction purposes.

E. Make documents and samples available at all times for inspection by the Project Manager.

F. Label each document "Project Record" in neat large printed letters.

G. Record information concurrently with construction progress. Do not conceal any work until required information is recorded.

H. Drawings - Legibly mark to record actual construction:
   1. Depths of various elements of foundation in relation to finished first floor datum.
   2. Horizontal and vertical locations of underground utilities and appurtenances referenced to permanent surface improvements.
   3. Location of internal utilities and appurtenances concealed in the construction, reference to outside and accessible features of the structures.
   4. Field changes of dimension and detail.
   5. Changes made by field order or by change order.
   6. Details not on original contract drawings.
   7. Elevations and horizontal locations, items crucial to future expansions as indicated on the drawings.

I. Specifications and Addenda - Legibly mark each section to record:
   1. Manufacturer, trade name, catalog number, and supplier of each product and item of equipment actually installed.
   2. Changes made by field order or by change order.

J. At contract closeout, deliver record documents to the Owner. Accompany submittal with transmittal letter in duplicate containing:
   1. Date.
   2. Project title and number.
   3. Contractor's name and address.
   4. Title and number of each record document.
   5. Signature of Contractor or his authorized representative.

3.4 OPERATION AND MAINTENANCE DATA

A. Provide data for:
   1. Plumbing equipment and controls - Division 22.
   2. HVAC equipment and controls – Division 23.
   3. Electrical equipment and controls - Division 26.
   4. Electronic Safety and Security controls – Division 28.

B. Submit three sets prior to final inspection, bound in 8-1/2 x 11 inch three-ring side binders with durable plastic covers.

C. Provide a separate volume for each system, with a table of contents and index tabs for each volume. Include the following information in each volume:
   1. Part 1: Directory, listing names of, addresses, and telephone numbers of

Architect/Engineer and Contractor.

2. Part 2: Operation and maintenance instructions, arranged by system. For each system, give names, addresses, and telephone numbers of subcontractors and suppliers.

D. Each volume/system shall list:
   1. Appropriate design criteria.
   2. List of equipment.
   3. Parts list.
   4. Operating instructions.
   5. Maintenance instructions, equipment.
   6. Maintenance instructions, finishes.
   7. Shop drawings and product data.
   8. Warranties.

END OF SECTION 01 77 00

SECTION 02 32 00 - GEOTECHNICAL INFORMATION AVAILABLE TO BIDDERS

1.1 SUBSURFACE INVESTIGATION REPORT

A. A copy of the subsurface investigation report with respect to the building site is included with this document:

Subsurface Investigation
Proposed Building and Stormwater Basin
Orange and Rockland Utilities
Spring Valley, Rockland County, New York

September 1, 2023
File No. 26.0092959.00

GZA GeoEnvironmental of New York
104 West 29th Street, 10th Floor
New York, NY 10001
Tel: 212-594-8140

B. The recommendations described shall not be construed as a requirement of this Contract, unless specifically referenced in the Contract Documents.

C. This report, by its nature, cannot reveal all conditions that exist on the site. Therefore, the Construction Manager and/or General Contractor is herewith directed to hire a Geotechnical Engineer to inspect, verify, write recommendations and findings in a written report and present to both Orange & Rockland Utilities, Inc. and to Owner's Representative, SNS Architects & Engineers, PC, this same Geotechnical Report.

END OF SECTION 02 32 00

Known for excellence.
Built on trust.

SUBSURFACE INVESTIGATION

PROPOSED BUILDING AND STORMWATER BASIN
ORANGE AND ROCKLAND UTILITIES
SPRING VALLEY, ROCKLAND COUNTY, NEW YORK

September 1, 2023
File No. 26.0092959.00

PREPARED FOR:
SNS Architects & Engineers, P.C.
1 Paragon Drive, Suite 250
Montvale, New Jersey

GZA GeoEnvironmental of New York
104 West 29th Street, 10th Floor | New York, NY 10001
212-594-8140

GZA has 32 Offices Nationwide
www.gza.com

Copyright© 2023 GZA GeoEnvironmental, Inc.

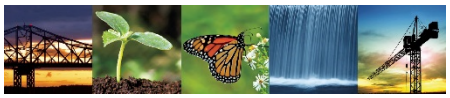

Known for excellence.
Built on trust.

GEOTECHNICAL
ENVIRONMENTAL
ECOLOGICAL
WATER
CONSTRUCTION MANAGEMENT

GZA GeoEnvironmental of New York
104 West 29th Street
10th Floor
New York, NY 10001
T: 212.594.8140
F: 212.279.8180
www.gza.com

September 1, 2023
File No. 26.0092959.00

SNS Architects & Engineers
1 Paragon Drive, Suite 250
Montvale, New Jersey 07645

Attention: Steven Napolitano, P.E.
Principal

Report
Subsurface Investigation
Proposed Building and Stormwater Basin
Spring Valley, Rockland County, New York
Orange and Rockland Utilities

Introduction

This report presents the results of a subsurface investigation performed by GZA GeoEnvironmental of New York (GZANY) for a proposed three-story building and associated stormwater basin proposed to be constructed in the Village of Spring Valley, Rockland County, New York. The subject site is identified as a developed Orange and Rockland Utilities property located at 390 West Route 59 which is shown on the Site Location Map, Plate 1. The development is generally bounded by Route 59 to the south, Robert Pitt Drive to the west, the Erie Lackawanna Railroad to the north, and Yatto Lane to the east. This report was generally prepared in accordance with our proposal dated October 31, 2022 and building investigation proposal dated August 18, 2022.

Proposed Construction

Overall Site plans prepared by SNS Architects and Engineers titled “SVOC New Office Addition & New Parking” dated May 2023 were provided to us. Based on those plans, the proposed construction consists of a three-story office building approximately 34,750 square foot in plan

An Equal Opportunity Employer M/F/V/H

area. The proposed office building will be located west of one of the existing buildings located in the central portion of the site. The new building will have a finish floor established at Elevation +504.0 feet, which ranges from approximately 3 feet above to 1 foot below the existing surface grades. Based on the type of construction planned, it is anticipated that building foundation loads would be light to moderate and floor slab loads would be relatively light. The new development will also reportedly include a stormwater management system basin to be constructed below future pavement areas in the western portion of the property. The invert of the infiltration pipes would be established at approximate Elevation (El.) +509 feet.

Purpose and Scope of Services

The purpose of our services would be to:

1) explore the subsurface soil, rock, and groundwater conditions within the proposed building area;

2) estimate the relevant geotechnical engineering properties of the encountered materials;

3) initiate field permeability tests at or near locations and depths identified to us;

4) evaluate the site foundation requirements considering the anticipated structural loads and encountered subsurface conditions;

5) recommend an appropriate type of foundation for support of the proposed building, and provide preliminary geotechnical-related foundation design and installation criteria, including an estimate of the Site Class as defined by the Building Code of New York State (NYSBC) for seismic design purposes;

6) provide preliminary recommendations for the support and the need for subdrainage of the ground floor slab; and

7) discuss appropriate earthwork operations or considerations consistent with the proposed construction and encountered subsurface conditions.

To accomplish these purposes, a subsurface exploration program consisting of six test borings were completed; four at the building site (B-3 through B-6) and two (B-1 and B-2) at the stormwater basin. The four building test borings were advanced using ATV-mounted, water rotary auger drilling equipment and extended to depths of

approximately 27 feet below the ground surface (bgs). Samples were extracted at closely spaced intervals in accordance with the procedures of the Standard Penetration Test.

The two stormwater borings were performed at the site within the footprint of the proposed detention system. These borings were advanced utilizing water rotary drilling equipment mounted on an all-terrain vehicle and extended to a depth of approximately 14 and 15 feet bgs, respectively. Two boring locations were subsequently offset and two infiltration tests were performed in general accordance with Appendix D of the New York State Department of Environmental Conservation (NYSDEC) Stormwater Design Manual at approximate El. +507 feet, which corresponds to approximately 9 feet bgs at B-2 and 11 feet bgs at B-1. The location and depth was determined by SNS Architects & Engineers (SNS).

All field work was performed under the direct technical supervision of a geotechnical engineer from GZA. Our representative located the explorations in the field, maintained continuous logs of the explorations as the work proceeded, performed the infiltration testing, and obtained selected samples of the encountered materials to develop the desired subsurface information.

The approximate locations of the explorations are shown on the Plot Plan, Plate 2. Detailed descriptions of the encountered subsurface conditions are presented on the individual Logs of Borings, Plates 3A through 3F. The soils have been visually classified in general accordance with the Unified Soil Classification System described on Plate 4.

The soil samples obtained from the explorations were brought to our office where they were visually examined in our soils mechanics laboratory. Selected samples were subjected to a geotechnical laboratory water content tests and gradation and hydrometer testing to aid in their engineering evaluation and classification. The moisture content tests are provided on the exploration logs. The results of the laboratory grain size tests are presented on the Gradation Curves, Plate 5.

The results of our field exploration and laboratory testing programs have provided the basis for our engineering analyses and building geotechnical design recommendations. The follow discussions of our findings and recommendations subject to the limitations attached as an Appendix to this report.

Site Conditions

Surface Features: The site is occupied by four, one to two-story buildings scattered throughout the site, as well as other ancillary structures and improvements. The buildings are surrounded by asphalt parking lot and landscape areas. Several staging areas are located throughout the site. Most of the proposed building area is a paved parking lot and existing grades within the proposed building area range from approximate El. +501 feet at the northern portion to El. +505 feet at the southern portion.

The western portion of the property where the basin is proposed consists of a material storage area and contains an area with large mature trees. Existing surface elevation in the future pavement area ranges from approximately El. +512 feet to El. +514 feet.

Subsurface Conditions

Building Area: The building borings were performed in paved areas and encountered approximately 6 inches of asphalt at the explored locations. The surface asphalt was underlain by existing fill in all four borings. The fill generally consisted of silty sands with varying amounts of gravel and extended to depths of approximately 3 feet bgs in B-3 through B-5 and 6 feet bgs in B-6. Fill thickness should be expected to vary between our explorations. The fill was underlain by interlayered loose to medium dense silty sands containing variable percentages of gravel which extended to the termination depths. A thin stiff sandy silt layer was present from approximately 9 to 11 feet bgs in B-4. Groundwater seepage was observed in all the test borings within the proposed building area at approximately 9 feet bgs, corresponding to approximate El. +493.5 to El. +494 feet.

Basin Area: The basin borings (B-1 and B-2) encountered approximately 6 inches of topsoil at the surface. The topsoil was underlain by loose to medium dense silty sands extending to 10 and 8 feet bgs, respectively. The silty sands were underlain by dark brown sandy silts which were generally medium dense to dense but locally loose near the top of the stratum in B-1. These materials extend to the bottom of the basin borings.

Groundwater was not observed in the basin borings within the future pavement areas. It should be noted that fluctuations in groundwater due to seasonal effects, utility leakages, grade changes, or other factors not present at the time of our exploration should be expected.

Findings and Recommendations

General: Based on the results of the boring explorations, it is our opinion that:

1) Following the site preparation procedures discussed later in this report, the proposed building may be supported by conventional shallow foundations which derive their support from the undisturbed natural soils or controlled compacted fill (CCF) placed atop the natural soils. Any existing fill and backfill or locally soft/disturbed native soils will not be suitable for foundation support and should be removed for its full depth and replaced with CCF below the new structure. Foundations supported atop these materials could be designed for maximum allowable net bearing pressures of up to 4,000 pounds per square foot (psf).

2) The proposed at-grade building floor slab could derive its support from the native soils or CCF placed to achieve the floor subgrade level. The at-grade floor slab should be underlain by a minimum 6-inch-thick layer of porous fill to provide a capillary break between the slab and the subgrade soils.

3) Groundwater was observed in the proposed building borings at approximately 9 feet bgs and, therefore, does not appear to be a major construction problem for building construction. Dewatering during construction should be provided as needed to maintain dry excavations. Also, management of surface runoff should be performed as needed.

4) Excavated silty sands, both fill and natural, that are free of any deleterious materials would provide a fair to good source of materials for reuse as CCF provided, they are conditioned where necessary, to attain moisture contents needed to attain the required compaction. Excavated silty soils (sandy silts), if encountered, would be less desirable for reuse as CCF due to their sensitivity to moisture related compaction and stability problems, and may be better suited for use in non-structural landscaped areas.

Discussions of these and other items considered relevant to the proposed construction are presented in the following sections of this report.

Site Preparation and Earthwork: All topsoil and existing pavement should be stripped/removed from within and at least 5 feet beyond the proposed construction footprint (new building and pavement areas). The topsoil will not be suitable for reuse as structural fill. Asphalt millings broken into sand and gravel sized particles could be used as fill below new pavement areas if permitted by Township and State ordinances. If not, the asphalt should be legally disposed of off-site. Asphalt is not permitted for reuse beneath the proposed building. The existing utilities or other improvements should also be removed for their full depth from within the proposed construction footprint and the resulting excavations backfilled with CCF. Any existing utilities to remain should be located and protected from damage during the work.

Existing fill was encountered in the building borings and extended to depths of approximately 3 to 6 feet bgs and should be expected to vary in thickness. The fill beneath the proposed building as well as any locally soft native soils, if present, should be removed for its full depth and replaced with CCF to provide uniform support for the proposed foundation and floor slab. At the time of construction, we recommend that a few test pits be performed throughout the footprint of the proposed building to evaluate the thickness of the slabs and the extent of complete removal.

Following removal of the fill and topsoil, the exposed natural subgrade soils in proposed building and pavement areas should be proofrolled and recompacted to a relatively dense and unyielding consistency with at least 10 passes of a heavy, self-propelled, vibrating drum compactor (having a minimum static drum weight of at least 12,000 pounds) under the observation of a representative from GZA. Vibrations should be disengaged immediately adjacent to the existing building or other vibration sensitive improvements. Any subgrade soils which

cannot be compacted to a dense and unyielding condition should be excavated to the surface of dense and stable soils and replaced with CCF.

Based on the site plan and proposed FFE provided to us, we anticipate that cuts of up to approximately 1 foot and fills of up to approximately 3 feet will be required within the proposed building area to reach the reported FFE of +504 feet. Any fill necessary to reach the design subgrade levels below building or other settlement sensitive structural areas should consist of CCF.

The fill necessary to reach the design subgrade levels below structural areas should consist of controlled compacted materials. Clayey and silty soils from site excavations would provide a relatively poor source of borrow materials for structural fill due to their sensitivity to moisture related compaction and stability problems. To the degree practical, clays and silts should be used as fill in non-structural, landscaped areas or in deeper structural fill areas where they can be covered by more granular materials, as these materials may be difficult or impossible to use as fill during or after wet or freezing weather. Excavated sands and silty sands, and gravelly soils which are free of cobbles, boulders, large rock fragments, debris or other deleterious materials would provide a relatively fair to good source of materials for reuse as CCF provided they are maintained at, or conditioned to, moisture contents suitable for compaction.

Any imported fill materials required to complete the site grading should consist of uncontaminated, relatively well-graded granular soils containing less than 15 percent by weight of material passing a U.S. Standard No. 200 sieve and a maximum particle size of 4 inches. The fill supplier should provide documentation of the environmental quality of all imported fill.

All fill placed within building, pavement or other structural areas should consist of CCF that is spread in horizontal layers on the order of 12 inches or less in loose thickness and uniformly compacted to at least 95 percent of maximum dry density as determined by the ASTM D-1557 test procedure. Compaction in non-structural areas

should be a minimum of 90 percent of maximum dry density. Compaction should be provided using a large self-propelled vibratory roller having a minimum static drum weight of at least 12,000 pounds. Backfill placed in confined areas such as foundation or utility trench excavations and compacted using manually operated equipment should be spread in layers of 6 to 8 inches or less in loose thickness, or as necessary to achieve the required compaction. All fill should be moisture conditioned as necessary to permit compaction to the required densities. Any compaction adjacent to the existing building should be performed with portable compaction equipment (Rammax or equivalent) and the level of vibrations reduced or completely disengaged to prevent damage to the existing building and its foundations. We recommend that all fill and earthwork operations be performed under the full-time observation of a GZA representative, including performance of the required compaction and field density testing. Any filling and compaction work in the proposed stormwater areas should comply with the stormwater design requirements.

All construction excavations should be performed in accordance with the most recent OSHA guidelines and any governing local or project safety codes or project requirements. Based on the results of our explorations, we believe that existing site soils will be considered Type "C" soils. Vertical excavation support systems should be provided, as necessary, to prevent damage to existing improvements or structures and to protect workers and the public, including the existing building if the structures abut each other.

Groundwater was encountered at depths of approximately 9 feet bgs in the four borings in the east portion of the site at the proposed building location. Groundwater was generally not encountered in basin borings in the west portion of the site. The contractor should be required to remove any surface runoff or perched/trapped water which may accumulate in construction excavations immediately to permit work to be completed in a relatively dry environment. We also recommend that positive surface drainage be maintained during construction to prevent inundation of the subgrade soils by surface water runoff. Water should not be allowed to pond on the

surface of soils. Exposure of subgrade soils to surface water runoff would be expected to result in softening and disturbance of the exposed soils.

Foundation Design Criteria: Following the site preparation procedures previously described, the proposed building may be supported by conventional shallow foundations which derive their support from the recompacted natural soils or CCF placed atop the natural soils to achieve the desired foundation subgrade levels. Foundations established on these materials may be designed to impose maximum allowable net bearing pressures of up to 4,000 psf.

Foundations should be established at depths of at least 3.5 feet below the lowest adjacent exterior grades to provide protection from frost penetration or deeper if required by local ordinances. Foundations adjacent to the existing building should match the levels of the adjacent foundations and excavations should be performed in a manner as to not undermine the adjacent foundations. Foundations in permanently heated portions of the structure may be established at convenient depths below the ground level floor slab provided they reach the intended bearing materials. Any loose or disturbed soils encountered at the foundation subgrade levels should be recompacted in-place to a dense condition or excavated and replaced with CCF or 3/4-inch clean stone prior to concrete placement.

We estimate that post-construction settlements of foundations designed and constructed in accordance with our recommendations would be on the order of 3/4 of 1 inch or less.

Seismic Design: Based on the results of the explorations performed for this investigation, the proposed building may be designed assuming a Site Class “D” as outlined in the NYSBC.

Floor Slab Design Criteria: Following the site preparation procedures previously described, it is our opinion that the floor slab may be supported by the undisturbed natural soils or CCF placed atop the native soils. Fill removal and replacement and placement of CCF should be performed under the observation of a representative from GZA.

A porous sub-slab drainage layer consisting of a minimum of 6 inches of porous fill such as clean, 3/4-inch crushed stone or washed gravel should be provided below the ground level slab to provide a capillary break between the slab and the underlying subgrade soils. Prior to floor slab construction, the exposed subgrade should be compacted to a dense condition. Any subgrade soils which cannot be compacted to a dense condition should be excavated and replaced with CCF.

Estimated post-construction floor slab settlements are expected to be on the order of 1/4 inch or less for the anticipated light floor load.

Pavement Design Criteria: Pavements established on the recompacted in-place fill should be designed for a "poor" subgrade support condition, with an estimated California Bearing Ratio (CBR) value of approximately 3 percent. Pavements established atop the natural silty sand soils or a minimum of 18 inches of compacted granular fill could be designed for a "good" subgrade support condition, with an estimated CBR value of 10 percent.

Immediately prior to pavement construction, the subgrade soils should be proofrolled and recompacted to at least 95 percent of its maximum dry density (ASTM D-1557) to densify any soils disturbed by the construction operations. Proofrolling should be performed with a loaded tandem axle dump truck to simulate the trucks that would be used to deliver the asphalt. Any unsuitable or disturbed subgrades should be treated under the observation of our representative prior to paving.

Infiltration Testing: Two infiltration tests were performed adjacent to the location of B-1 and B-2 within the silty subsoils (sandy silts). The tests were located within the proposed basin BMP below the future pavement and performed at approximate El. +507, which is approximately 2 feet below the invert of the proposed pipe (El. +509 feet). The recorded infiltration rates were approximately 20 and 2.5 inches per hour, respectively. The results of the infiltration testing are summarized on the Test Boring Logs, Plates 3A and 3B.

Please contact us if you have any questions regarding this report.

The following Plates and Appendix are attached and complete this report:

Plate 1 - Site Location Map
Plate 2 - Plot Plan
Plates 3A through 3F - Logs of Borings
Plate 4 - Unified Soil Classification System
Plates 5 - Gradation Curves
Appendix - Limitations

Respectfully submitted,

GZA GeoEnvironmental of New York

Ohm P. Patel
Assistant Project Manager

Christopher P. Tansey, P.E.
Associate Principal

Andrew Rizk, P.E.
Consultant/Reviewer

OPP/CPT:mh
(1 copy submitted via email)

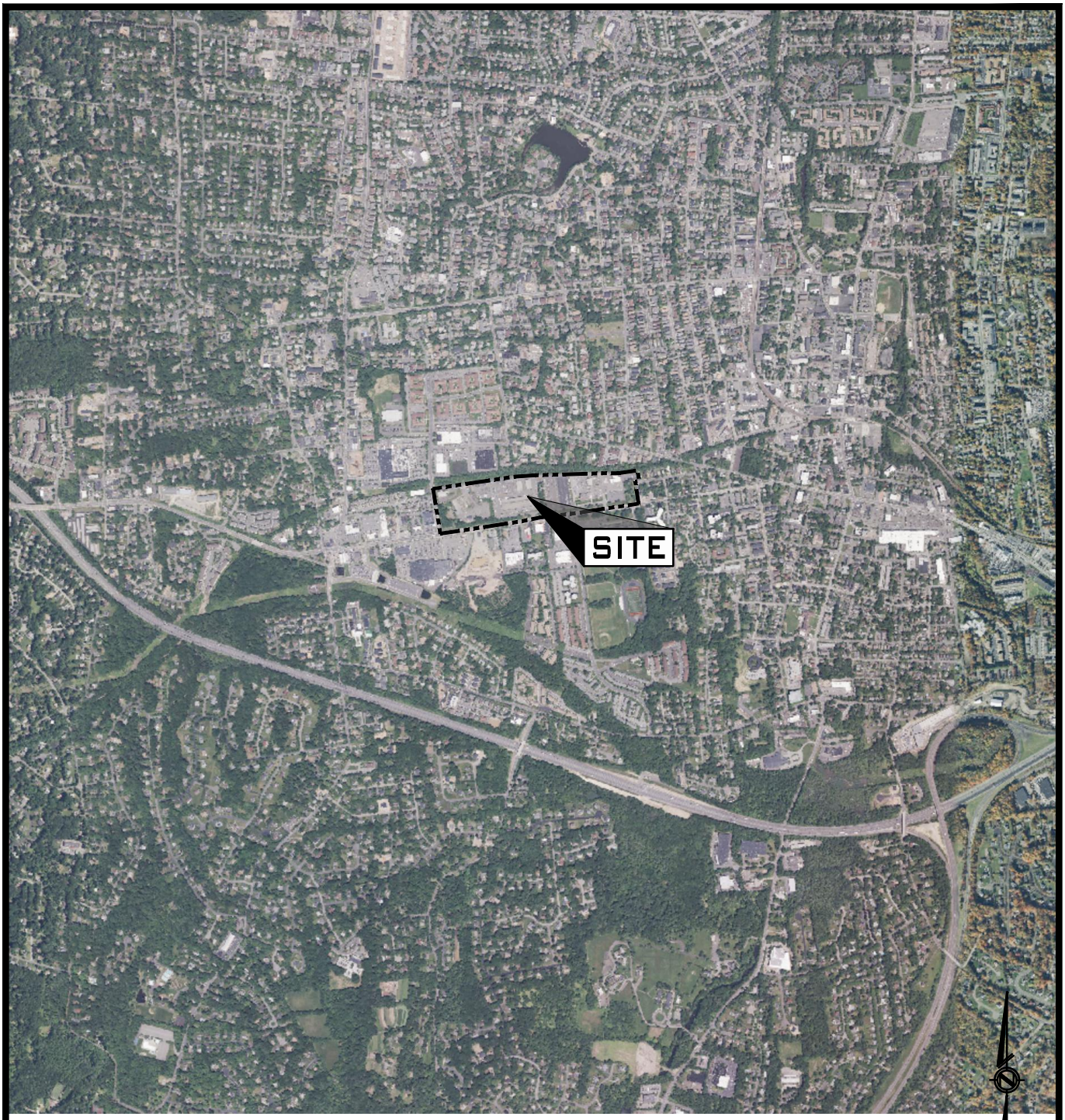

Aerial image provided by ©Microsoft Corp.©2023 MAXAR©CNES (2023) Distribution Airbus DS.

GZA GeoEnvironmental of N.Y.
Engineers and Scientists
Known for excellence. Built on trust.
www.gza.com

SITE LOCATION MAP

PROPOSED 2-STORY BUILDING
SPRING VALLEY, NEW YORK
SNS ARCHITECTS

JOB NO.	FILE NO.	DR. BY	CHK. BY	DATE	SCALE	PLATE
26.0092959.00	–	VJD	OPP	8/8/23	1"=2,000'	1

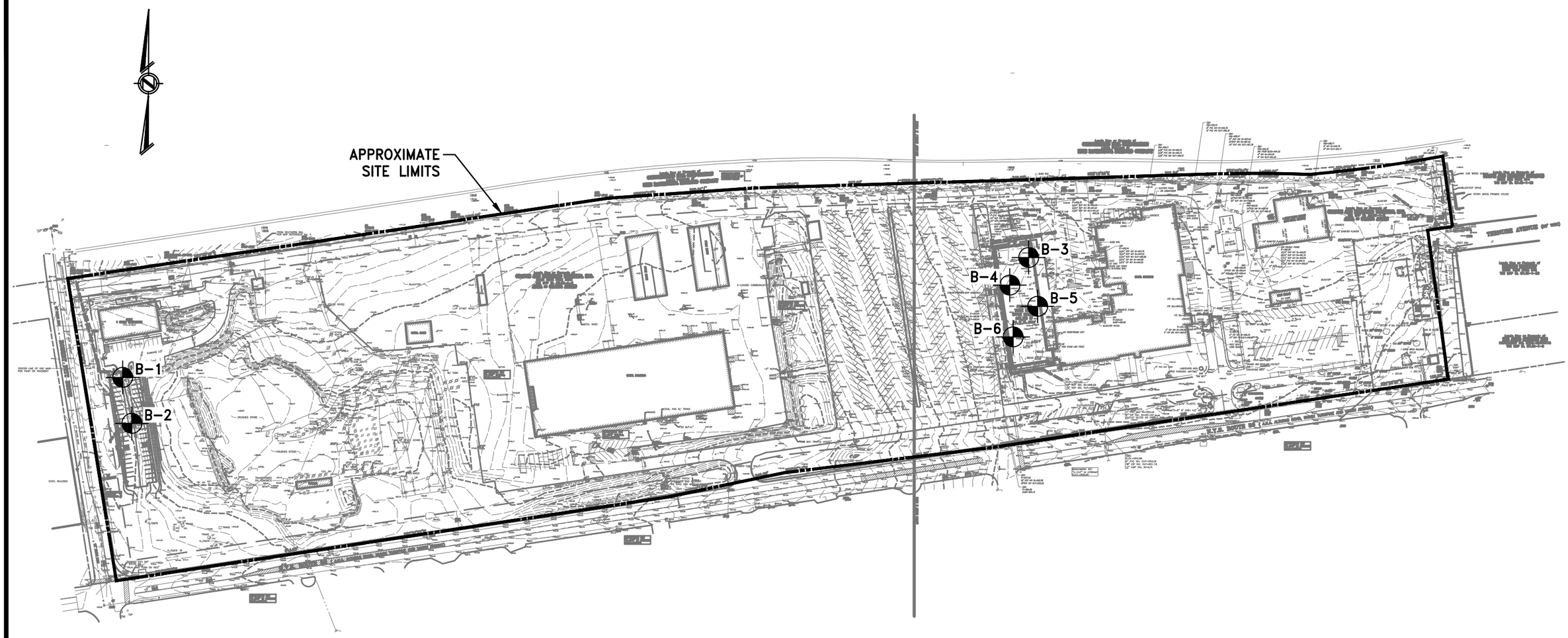

KEY:

B-1 NUMBER AND APPROXIMATE LOCATION OF BORINGS PERFORMED FOR THIS STUDY

NOTES:

1. This drawing is part of GZA GeoEnvironmental, Inc. Report No. 26.0092959.00 and should be read together with the report for complete evaluation.

2. General layout was obtained from a drawing prepared by SNS Arch., entitled "Overall Site Plan" dated 4/25/23, scale 1"= 80'.

PLOT PLAN

PROPOSED 2-STORY BUILDING
SPRING VALLEY, NEW YORK
SNS ARCHITECTS

GZA GeoEnvironmental, Inc.
Engineers and Scientists
Known for excellence. Built on trust.
www.gza.com

JOB NO.	FILE NO.
26.0092959.00	-

DR. BY	CHK. BY	DATE	SCALE	PLATE
VJD	OPP	8/8/23	1"= 200'	2

TEST BORING LOG

GZA GeoEnvironmental, Inc.
Engineers and Scientists

SNS Architects

Spring Valley, NY

EXPLORATION NO.: B-1
SHEET: 1 of 1
PROJECT NO: 26.0092959.00
REVIEWED BY: Ohm Patel

Logged By: S. Wright
Drilling Co.: Craig Drilling Co.
Driller: Brian

Type of Rig: Track
Rig Model: CME 55LC
Drilling Method: Wash Rotary

Boring Location: See Plan
Ground Surface Elev. (ft.): +518
Date Start - Finish: 8/4/2023 - 8/4/2023
Final Boring Depth (ft.): 14

Hammer Type: Automatic Hammer
Hammer Weight (lb.): 140
Hammer Fall (in.): 30
Auger or Casing O.D./I.D Dia (in.): 4.3/4

Groundwater Depth (ft.)			
Date	Time	Water Depth	Stab. Time
8/4/23		NE	

Depth (ft)	Sample No.	Sample Depth (ft.)	Sample Blows (per 6 in.)	Sample SPT Value	Symbol	Sample Description and Identification	Depth (ft)	Water Content (%)	Remark
						6" Topsoil			
	S1	0-2	2 3 4 5	7	SM	Brown fine to coarse sand, little silt, trace gravel (moist)(loose)		9.1	
	S2	2-4	5 6 3 6	9				6.4	
5	S3	4-6	6 6 6 6	12		- grading to fine to medium sand, some silt (medium dense)	5	14.6	
	S4	6-8	3 5 6 6	11				19.7	
	S5	8-10	3 4 5 5	9		- grading to little silt (loose)		28.7	
10					ML	Dark brown silt, some fine sand (very loose)(moist)	10		
	S6	10-12	2 2 1 1	3				20.4	
	S7	12-14	5 8 9 13	17		- (medium dense)		18.1	
15						End of exploration at 14 feet. Groundwater not encountered Boring offset 5' east and Infiltration test performed @ 11' Measured Infiltration rate 20 in/hr			
20									
25									
30									

REMARKS

See Log Key for exploration of sample description and identification procedures. Stratification lines represent approximate boundaries between soil and bedrock types. Actual transitions may be gradual. Water level readings have been made at the times and under the conditions stated. Fluctuations of groundwater may occur due to other factors than those present at the times the measurements were made.

Plate No.: 3A

1A - MTA BORING LOG USCS; 9/1/2023; 3:56:38 PM

TEST BORING LOG

GZA GeoEnvironmental, Inc.
Engineers and Scientists

SNS Architects

Spring Valley, NY

EXPLORATION NO.: B-2
SHEET: 1 of 1
PROJECT NO: 26.0092959.00
REVIEWED BY: Ohm Patel

Logged By: S. Wright
Drilling Co.: Craig Drilling Co.
Driller: Brian

Type of Rig: Track
Rig Model: CME 55LC
Drilling Method: Wash Rotary

Boring Location: See Plan
Ground Surface Elev. (ft.): +516
Date Start - Finish: 8/4/2023 - 8/4/2023
Final Boring Depth (ft.): 15

Hammer Type: Automatic Hammer
Hammer Weight (lb.): 140
Hammer Fall (in.): 30
Auger or Casing O.D./I.D Dia (in.): 4.3/4

Groundwater Depth (ft.)			
Date	Time	Water Depth	Stab. Time
8/4/23		NE	

Depth (ft)	Sample No.	Sample Depth (ft.)	Sample Blows (per 6 in.)	Sample SPT Value	Symbol	Sample Description and Identification	Depth (ft)	Water Content (%)	Remark
						6" Topsoil			
	S1	0-2	3 7 5 10	12	SM	Brown fine to medium sand, little silt (moist)(medium dense)		8.7	
	S2	2-4	8 5 13 6	18				24.6	
5	S3	4-6	6 6 5 6	11			5	25.0	
	S4	6-8	5 6 6 13	12				23.7	
	S5	8-10	12 10 12 13	22	ML	Dark brown silt, some fine sand (moist)(medium dense to dense)		14.5	
10							10		
	S6	10-12	8 15 17 16	32				16.2	
	S7	12-14	22 15 19 23	34				21.2	
15	S8	14-15	Push	Push			15	21.2	
						End of exploration at 15 feet. Groundwater not encountered Boring offset 5' east and Infiltration test performed @ 9' Measured Infiltration rate 2.5 in/hr			
20									
25									
30									

REMARKS

See Log Key for exploration of sample description and identification procedures. Stratification lines represent approximate boundaries between soil and bedrock types. Actual transitions may be gradual. Water level readings have been made at the times and under the conditions stated. Fluctuations of groundwater may occur due to other factors than those present at the times the measurements were made.

Plate No.: 3B

1A - MTA BORING LOG USCS; 9/1/2023; 3:56:39 PM

TEST BORING LOG

GZA GeoEnvironmental, Inc.
Engineers and Scientists

SNS Architects

Spring Valley, NY

EXPLORATION NO.: B-3
SHEET: 1 of 1
PROJECT NO: 26.0092959.00
REVIEWED BY: Ohm Patel

Logged By: S. Wright
Drilling Co.: Craig Drilling Co.
Driller: Brian

Type of Rig: Track
Rig Model: CME 55LC
Drilling Method: Wash Rotary

Boring Location: See Plan
Ground Surface Elev. (ft.): +503
Date Start - Finish: 8/4/2023 - 8/4/2023
Final Boring Depth (ft.): 27

Hammer Type: Automatic Hammer
Hammer Weight (lb.): 140
Hammer Fall (in.): 30
Auger or Casing O.D./I.D Dia (in.): 4.3/4

Groundwater Depth (ft.)			
Date	Time	Water Depth	Stab. Time
8/4/23		9	

Depth (ft)	Sample No.	Sample Depth (ft.)	Blows (per 6 in.)	SPT Value	Symbol	Sample Description and Identification	Depth (ft)	Water Content (%)	Remark
						6" Asphalt			
	S1	0.5-2.5	8 10 8 10	18		Fill - Dark brown fine to medium sand, and silt, trace fine gravel (moist)		9.4	
	S2	2.5-4.5	3 4 24 23	28	SM	Brown fine to coarse sand, and silt, little fine gravel (moist)(medium dense)		9.0	
5	S3	4.5-6.5	32 25 16 20	41		- (dense)	5		
	S4	6.5-6.8	92/4"	92/4"		- (very dense)			
10	C-1	6.8-11.8				- (wet) Core through boulder/cobbles	10		
15	S5	15-17	11 14 32 15	46	GM	Dark brown fine to coarse gravel, some fine to coarse sand, little silt (wet)(very dense)	15		
20	S6	20-22	12 13 9 7	22		- (medium dense)	20		
25	S7	25-27	26 34 48 43	82		- (very dense)	25		
30						End of exploration at 27 feet. Groundwater encountered @ 9'			

REMARKS

See Log Key for exploration of sample description and identification procedures. Stratification lines represent approximate boundaries between soil and bedrock types. Actual transitions may be gradual. Water level readings have been made at the times and under the conditions stated. Fluctuations of groundwater may occur due to other factors than those present at the times the measurements were made.

Plate No.: 3C

1A - MTA BORING LOG USCS; 9/1/2023; 3:56:39 PM

TEST BORING LOG

GZA GeoEnvironmental, Inc.
Engineers and Scientists

SNS Architects

Spring Valley, NY

EXPLORATION NO.: B-4
SHEET: 1 of 1
PROJECT NO: 26.0092959.00
REVIEWED BY: Ohm Patel

Logged By: Santiago Ramirez
Drilling Co.: Craig Drilling Co.
Driller: Brian

Type of Rig: Track
Rig Model: CME 55LC
Drilling Method: Wash Rotary

Boring Location: See Plan
Ground Surface Elev. (ft.): +503
Date Start - Finish: 8/5/2023 - 8/5/2023
Final Boring Depth (ft.): 27

Hammer Type: Automatic Hammer
Hammer Weight (lb.): 140
Hammer Fall (in.): 30
Auger or Casing O.D./I.D Dia (in.): 4.3/4

Groundwater Depth (ft.)

Date	Time	Water Depth	Stab. Time
8/5/23		9	

Depth (ft)	Sample No.	Sample Depth (ft.)	Blows (per 6 in.)	SPT Value	Symbol	Sample Description and Identification	Depth (ft)	Water Content (%)	Remark
	S1	0-1				6" Asphalt			
	S2	1-3	10 9 9 15	18		Fill - Brown and gray fine to coarse sand, little silt, trace gravel (moist)		7.5	
	S3	3-5	14 14 13 14	27	SM	Brown fine to coarse sand, little silt, trace gravel (moist)(medium dense)		7.6	
5							5		
	S4	5-7	12 10 8 11	18		- grading to some silt			
	S5	7-9	16 10 11 10	21		- grading to fine to medium sand, little fine gravel			
10	S6	9-11	7 5 4 14	9	ML	Reddish brown silt, and fine to coarse sand (wet)(loose)	10	17.3	
	S7	11-13	18 19 18 43	37	SM	Brown fine to medium sand, some silt, trace gravel (moist)(dense)			
15							15		
	S8	15-17	8 7 7 8	14		- (medium dense)			
20							20		
	S9	20-22	10 5 4 4	9		- (loose)			
25							25		
	S10	25-27	16 23 41 43	64		- grading to some fine gravel, little silt (very dense)			
30						End of exploration at 27 feet. Groundwater encountered @ 9'			

REMARKS

See Log Key for exploration of sample description and identification procedures. Stratification lines represent approximate boundaries between soil and bedrock types. Actual transitions may be gradual. Water level readings have been made at the times and under the conditions stated. Fluctuations of groundwater may occur due to other factors than those present at the times the measurements were made.

Plate No.: 3D

1A - MTA BORING LOG USCS; 9/1/2023; 3:56:40 PM

TEST BORING LOG

GZA GeoEnvironmental, Inc.
Engineers and Scientists

SNS Architects

Spring Valley, NY

EXPLORATION NO.: B-5
SHEET: 1 of 1
PROJECT NO: 26.0092959.00
REVIEWED BY: Ohm Patel

Logged By: Santiago Ramirez
Drilling Co.: Craig Drilling Co.
Driller: Brian

Type of Rig: Track
Rig Model: CME 55LC
Drilling Method: Wash Rotary

Boring Location: See Plan
Ground Surface Elev. (ft.): +502.5
Date Start - Finish: 8/5/2023 - 8/5/2023
Final Boring Depth (ft.): 27

Hammer Type: Automatic Hammer
Hammer Weight (lb.): 140
Hammer Fall (in.): 30
Auger or Casing O.D./I.D Dia (in.): 4.3/4

Groundwater Depth (ft.)			
Date	Time	Water Depth	Stab. Time
8/5/23		9	

Depth (ft)	Sample No.	Sample Depth (ft.)	Sample Blows (per 6 in.)	Sample SPT Value	Symbol	Sample Description and Identification	Depth (ft)	Water Content (%)	Remark
	S1	0-1				6" Asphalt			
	S2	1-3	12 13 15 15	28		Fill - Brown fine to coarse sand, little silt, trace gravel (moist)		5.0	
	S3	3-5	12 10 9 10	19	SM	Brown fine to medium sand, little silt, trace gravel (medium dense)(moist)		4.5	
5							5		
	S4	5-7	8 9 9 10	18					
	S5	7-9	9 8 6 7	14		- grading to fine to coarse sand			
10	S6	9-11	8 5 3 3	8		- (wet)(loose)	10		
	S7	11-13	5 5 4 4	9					
15							15		
	S8	15-17	12 13 16 16	29		- grading to grayish brown color, some silt, little fine gravel (medium dense)			
20							20		
	S9	20-22	20 15 14 12	29		- grading to fine to medium sand, little silt			
25							25		
	S10	25-27	18 17 17 15	34		- grading to little fine gravel (dense)			
30						End of exploration at 27 feet. Groundwater encountered @ 9'			

REMARKS

See Log Key for exploration of sample description and identification procedures. Stratification lines represent approximate boundaries between soil and bedrock types. Actual transitions may be gradual. Water level readings have been made at the times and under the conditions stated. Fluctuations of groundwater may occur due to other factors than those present at the times the measurements were made.

Plate No.: 3E

1A - MTA BORING LOG USCS; 9/1/2023; 3:56:41 PM

TEST BORING LOG

GZA GeoEnvironmental, Inc.
Engineers and Scientists

SNS Architects

Spring Valley, NY

EXPLORATION NO.: B-6
SHEET: 1 of 1
PROJECT NO: 26.0092959.00
REVIEWED BY: Ohm Patel

Logged By: Santiago Ramirez
Drilling Co.: Craig Drilling Co.
Driller: Brian

Type of Rig: Track
Rig Model: CME 55LC
Drilling Method: Wash Rotary

Boring Location: See Plan
Ground Surface Elev. (ft.): +503.5
Date Start - Finish: 8/5/2023 - 8/5/2023
Final Boring Depth (ft.): 27

Hammer Type: Automatic Hammer
Hammer Weight (lb.): 140
Hammer Fall (in.): 30
Auger or Casing O.D./I.D Dia (in.): 4.3/4

Groundwater Depth (ft.)			
Date	Time	Water Depth	Stab. Time
8/5/23		9	

Depth (ft)	Sample No.	Sample Depth (ft.)	Sample Blows (per 6 in.)	Sample SPT Value	Symbol	Sample Description and Identification	Depth (ft)	Water Content (%)	Remark
	S1	0-1				6" Asphalt			
	S2	1-3	13 9 10 8	19		Fill - Brown and gray fine to coarse sand, little silt, trace gravel (moist)		8.2	
	S3	3-5	11 13 10 11	23				14.6	
5							5		
	S4	5-7	13 8 6 6	14				8.5	
	S5	7-9	11 7 12 7	19		Brown fine to coarse sand, some silt, trace gravel (moist)(medium dense)			
10	S6	9-11	6 7 7 6	14		- (wet)	10		
	S7	11-13	7 7 6 8	13		- grading with little fine gravel			
						- grading with trace fine gravel			
15							15		
	S8	15-17	7 7 8 9	15	SM	- grading to grayish brown color, some silt, some gravel			
20							20		
	S9	20-22	13 10 13 19	23		- grading to trace gravel			
25							25		
	S10	25-27	7 6 5 5	11					
30						End of exploration at 27 feet. Groundwater encountered @ 9'			

REMARKS

See Log Key for exploration of sample description and identification procedures. Stratification lines represent approximate boundaries between soil and bedrock types. Actual transitions may be gradual. Water level readings have been made at the times and under the conditions stated. Fluctuations of groundwater may occur due to other factors than those present at the times the measurements were made.

Plate No.: 3F

1A - MTA BORING LOG USCS; 9/1/2023; 3:56:41 PM

MAJOR DIVISIONS			LETTER SYMBOL	TYPICAL DESCRIPTIONS
COARSE GRAINED SOILS More than 50% of material is LARGER than No. 200 Sieve	GRAVEL & GRAVELLY SOILS More than 50% of coarse fraction RETAINED on No. 4 Sieve	CLEAN GRAVELS (Little or no fines)	GW	Well-graded gravels, gravel-sand mixtures, little or no fines.
			GP	Poorly-graded gravels, gravel-sand mixtures, little or no fines
		GRAVELS WITH FINES (Appreciable amount of fines)	GM	Silty gravels, gravel-sand-silt mixtures.
			GC	Clayey gravels, gravel-sand-clay mixtures.
	SAND AND SANDY SOILS More than 50% of coarse fraction PASSING a No. 4 Sieve	CLEAN SAND (Little or no fines)	SW	Well-graded sands, gravelly sands, little or no fines.
			SP	Poorly-graded sands, gravelly sands, little or no fines.
		SANDS WITH FINES (Appreciable amount of fines)	SM	Silty sands, sand-silt mixtures
			SC	Clayey sands, sand-clay mixtures.
FINE GRAINED SOILS More than 50% of material is SMALLER than No. 200 Sieve.	SILTS AND CLAYS	Liquid limit LESS than 50	ML	Inorganic silts and very fine sands, rock flour, silty or clayey fine sands or clayey silts with slight plasticity.
			CL	Inorganic clays of low to medium plasticity, gravelly clays, sandy clays, silty clays, lean clays.
			OL	Organic silts and organic silty clays of low plasticity.
	SILTS AND CLAYS	Liquid limit GREATER than 50	MH	Inorganic silts, micaceous or diatomaceous fine sand or silty soils.
			CH	Inorganic clays of high plasticity, fat clays.
			OH	Organic clays of medium to high plasticity, organic silts.
HIGHLY ORGANIC SOILS			PT	Peat, humus, swamp soils with high organic contents

NOTE: DUAL SYMBOLS ARE USED TO INDICATE BORDERLINE SOIL CLASSIFICATIONS.

GRADATION*		COMPACTNESS* sand and/or gravel		CONSISTENCY* clay and/or silt	
% Finer by Weight		Relative Density		Range of Shearing Strength in Pounds per Square Foot	
Trace	0% to 10%	Loose	0% to 40%	Very Soft	less than 250
Little	10% to 20%	Medium Dense	40% to 70%	Soft	250 to 500
Some	20% to 35%	Dense	70% to 90%	Medium	500 to 1000
And	35% to 50%	Very Dense	90% to 100%	Stiff	1000 to 2000
				Very Stiff	2000 to 4000
				Hard	Greater than 4000

**Values are from laboratory or field test data, where applicable. When no testing was performed, values are estimated.*

UNIFIED SOIL CLASSIFICATION SYSTEM

SOIL CLASSIFICATION CHART

Particle Size Distribution Report

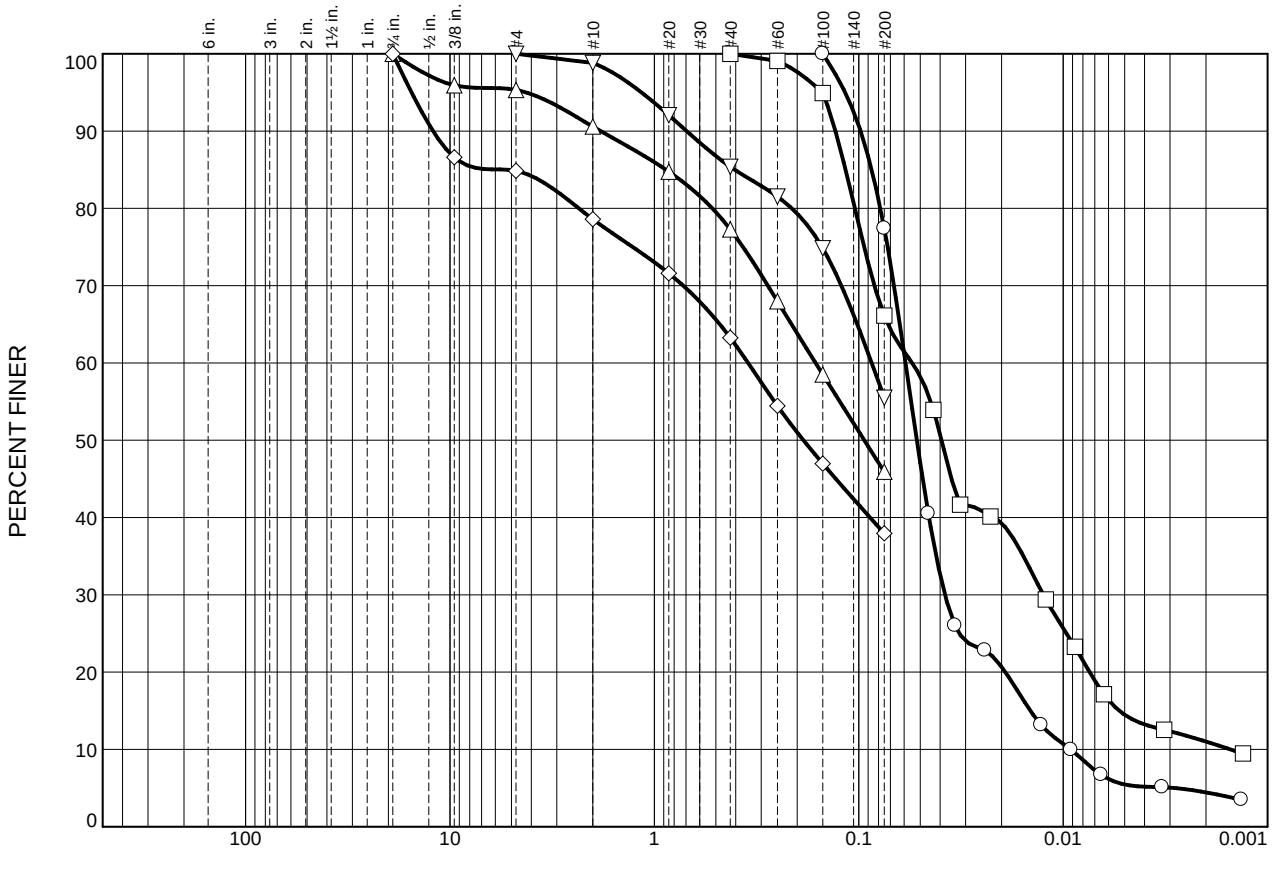

	% +3"	% Gravel		% Sand			% Fines	
		Coarse	Fine	Coarse	Medium	Fine	Silt	Clay
○	0.0	0.0	0.0	0.0	0.0	22.6	71.9	5.5
□	0.0	0.0	0.0	0.0	0.0	33.9	51.6	14.5
△	0.0	0.0	4.7	4.7	13.3	31.4	45.9	
◇	0.0	0.0	15.1	6.3	15.3	25.3	38.0	
▽	0.0	0.0	0.0	1.2	13.4	29.9	55.5	

SOIL DATA

SYMBOL	SOURCE	SAMPLE NO.	DEPTH (ft.)	Material Description	USCS
○	B-1	6	10-12	Silt, some fine Sand (MC=20.4%)	ML
□	B-2	5	8-10	Silt, some fine Sand (MC=14.5%)	ML
△	B-3	1	0.5-2.5	F-m Sand, and Silt, trace fine Gravel (MC=9.4%)	SM
◇	B-3	2	2.5-4.5	F-c Sand, and Silt, little fine Gravel (MC=9.0%)	SM
▽	B-4	5	9-11	Silt, and f-c Sand (MC=17.3%)	ML

GZA GeoEnvironmental, Inc.

South Bound Brook, NJ

Client: SNS Architechts

Project:

Project No.: 26.0092959.00

Figure 5

APPENDIX

APPENDIX

Limitations

A. Subsurface Information

Locations: The locations of the explorations were approximately determined by tape and compass measurement from existing surface features. Elevations of the explorations were approximately determined by interpolation between contours shown on topographic plans provided to us by the site engineer. The locations and elevations of the explorations should be considered accurate only to the degree implied by the method used.

Interface of Strata: The stratification lines shown on the individual logs of the subsurface explorations represent the approximate boundaries between soil types, and the transitions may be gradual.

Field Logs/Final Logs: A field log was prepared for each exploration by a member of our staff. The field log contains factual information and interpretation of the soil conditions between samples. Our recommendations are based on the final logs as shown in this report and the information contained therein, and not on the field logs. The final logs represent our interpretation of the contents of the field logs, and the results of the laboratory observations and/or tests of the field samples.

Water Levels: Water level readings have been made in the explorations at times and under conditions stated on the individual logs. These data have been reviewed and interpretations made in the text of this report. However, it must be noted that fluctuations in the level of the groundwater will occur due to variations in rainfall, temperature, and other factors.

Pollution/Contamination: Unless specifically indicated to the contrary in this report, the scope of our services was limited only to investigation and evaluation of the geotechnical engineering aspects of the site conditions, and did not include any consideration of potential site pollution or contamination resulting from the presence of chemicals, metals, radioactive elements, etc. This report offers no facts or opinions related to potential pollution/contamination of the site.

Environmental Considerations: Unless specifically indicated to the contrary in this report, this report does not address environmental considerations which may affect the site development, e.g., wetlands determinations, flora and fauna, wildlife, etc. The conclusions and recommendations of this report are not intended to supersede any environmental conditions which should be reflected in the site planning.

B. Applicability of Report

This report has been prepared in accordance with generally accepted soils and foundation engineering practices for the exclusive use of SNS Architects for specific application to the design of the proposed three story office building and stormwater BMP. No other warranty, expressed or implied, is made.

C. Reinterpretation of Recommendations

Change in Location or Nature of Facilities: In the event that any changes in the nature, design or location of the building and/or facilities are planned, the conclusions and recommendations contained in this report shall not be considered valid unless the changes are reviewed and conclusions of this report modified or verified in writing.

Changed Conditions During Construction: The analyses and recommendations submitted in this report are based in part upon the data obtained from six widely-spaced test borings performed for this study. The nature and extent of variations between the explorations may not become evident until construction. If variations then appear evident, it will be necessary to reevaluate the recommendations of this report.

Changes in State-of-the-Art: The conclusions and recommendations contained in this report are based upon the applicable standards of our profession at the time this report was prepared.

D. Use of Report by Prospective Bidders

This soil and foundation engineering report was prepared for the project by GZA GeoEnvironmental Inc. (GZA) for design purposes and may not be sufficient to prepare an accurate bid. Contractors utilizing the information in the report should do so with the express understanding that its scope was developed to address design considerations. Prospective bidders should obtain the owner's permission to perform whatever additional explorations or data gathering they deem necessary to prepare their bid accurately.

E. Construction Observation

We recommend that GZA be retained to provide on-site soils engineering services during the earthwork construction and foundation phases of the work. This is to observe compliance with the design concepts and to allow changes in the event that subsurface conditions differ from those anticipated prior to the start of construction.

ORANGE & ROCKLAND UTILITIES, INC
SVOC NEW OFFICE ADDITION

Tax Map ID 56.52-1-2
390 West Route 59
Village of Spring Valley
Town of Ramapo
Rockland County, New York

FOOTINGS, FOUNDATIONS AND STRUCTURAL
TECHNICAL SPECIFICATIONS

PREPARED BY

SNS ARCHITECTS & ENGINEERS, P.C.
One Paragon Drive, Suite 250, Montvale, NJ 07645 (201) 573-1767 FAX: (201) 573-0808

April 28, 2025 – Issued for Bidding and Building Department Filing

PROFESSIONAL ENGINEER

STEVEN NAPOLITANO, PE
NY License No. 077323

SECTION 03 10 00 - CONCRETE FORMS AND ACCESSORIES

PART 1 - GENERAL

1.1 SECTION INCLUDES

A. Formwork for cast-in place concrete, with shoring, bracing and anchorage.

B. Openings for other work.

C. Form accessories.

D. Form stripping.

1.2 RELATED SECTIONS

A. Section 03 20 00 - Concrete Reinforcement.

B. Section 03 30 00 - Cast-in-Place Concrete.

C. Section 03 39 00 - Concrete Curing.

1.3 REFERENCES

A. ACI 301 - Specifications for Structural Concrete for Buildings; American Concrete Institute International.

B. ACI 318 - Building Code Requirements for Structural Concrete and Commentary; American Concrete Institute International.

C. ACI 347 - Guide to Formwork for Concrete; American Concrete Institute International.

D. ASME A17.1 - Safety Code for Elevators and Escalators; The American Society of Mechanical Engineers.

1.4 DESIGN REQUIREMENTS

A. Design, engineer and construct formwork, shoring and bracing to conform to code requirements; resultant concrete to conform to required shape, line and dimension.

1.5 QUALITY ASSURANCE

A. Perform work of this section in accordance with ACI 347, ACI 301, and ACI 318.

B. Design formwork under direct supervision of a Professional Structural Engineer experienced in design of concrete formwork and licensed in the State in which the Project is located.

1.6 REGULATORY REQUIREMENTS

A. Conform to applicable code for design, fabrication, erection and removal of formwork.

PART 2 - PRODUCTS

2.1 WOOD FORM MATERIALS

A. Form Materials: At the discretion of the Contractor.

2.2 FORMWORK ACCESSORIES

A. Form Release Agent: Colorless mineral oil that will not stain concrete, absorb moisture, impair natural bonding of concrete finish coatings, or affect color characteristics of concrete finish coatings.

B. Dovetail Anchor Slot: Galvanized steel, 22 gage thick, foam filled, release tape sealed slots, anchors for securing to concrete formwork.

C. Flashing Reglets: Galvanized steel, 22 gage thick, longest possible lengths, with alignment splines for joints, foam filled, release tape sealed slots, anchors for securing to concrete formwork.

D. Nails, Spikes, Lag Bolts, Through Bolts, Anchorages: Sized as required, of sufficient strength and character to maintain formwork in place while placing concrete.

E. Waterstops: Polyvinyl chloride, minimum 1,750 psi tensile strength, minimum 50 degrees F to plus 175 degrees F working temperature range, 6 inch wide, maximum possible lengths, ribbed profile, preformed corner sections, heat welded jointing.

PART 3 - EXECUTION

3.1 EXAMINATION

A. Verify lines, levels and centers before proceeding with formwork. Ensure that dimensions agree with drawings.

3.2 EARTH FORMS

A. Earth forms are not permitted.

3.3 ERECTION - FORMWORK

A. Erect formwork, shoring and bracing to achieve design requirements, in accordance with requirements of ACI 301.

B. Provide bracing to ensure stability of formwork. Shore or strengthen formwork subject to overstressing by construction loads.

C. Arrange and assemble formwork to permit dismantling and stripping. Do not damage concrete during stripping. Permit removal of remaining principal shores.

D. Align joints and make watertight. Keep form joints to a minimum.

E. Obtain approval before framing openings in structural members that are not indicated on drawings.

F. Provide fillet strips on external corners of beams, joists, and columns.

G. Install void forms in accordance with manufacturer's recommendations. Protect forms from moisture or crushing.

H. Coordinate this section with other sections of work that require attachment of components to formwork.

I. If formwork is placed after reinforcement, resulting in insufficient concrete cover over reinforcement, request instructions from Architect/Engineer before proceeding.

3.4 APPLICATION - FORM RELEASE AGENT

A. Apply form release agent on formwork in accordance with manufacturer's recommendations.

B. Apply prior to placement of reinforcing steel, anchoring devices, and embedded items.

C. Do not apply form release agent where concrete surfaces will receive special finishes or applied coverings that are affected by agent. Soak inside surfaces of untreated forms with clean water. Keep surfaces coated prior to placement of concrete.

3.5 INSERTS, EMBEDDED PARTS, AND OPENINGS

A. Provide formed openings where required for items to be embedded in passing through concrete work.

B. Locate and set in place items that will be cast directly into concrete.

C. Coordinate with work of other sections in forming and placing openings, slots, reglets, recesses, sleeves, bolts, anchors, other inserts, and components of other work.

D. Install accessories in accordance with manufacturer's instructions, so they are straight, level, and plumb. Ensure items are not disturbed during concrete placement.

E. Install waterstops in accordance with manufacturer's instructions, so they are continuous without displacing reinforcement. Heat seal joints so they are watertight.

F. Provide temporary ports or openings in formwork where required to facilitate cleaning and inspection. Locate openings at bottom of forms to allow flushing water to drain.

G. Close temporary openings with tight fitting panels, flush with inside face of forms, and neatly fitted so joints will not be apparent in exposed concrete surfaces.

3.6 FORM CLEANING

A. Clean forms as erection proceeds, to remove foreign matter within forms.

B. Clean formed cavities of debris prior to placing concrete.
   1. Flush with water or use compressed air to remove remaining foreign matter. Ensure that water and debris drain to exterior through clean-out ports.
   2. During cold weather, remove ice and snow from within forms. Do not use de-icing salts. Do not use water to clean out forms, unless formwork and concrete construction proceed within heated enclosure. Use compressed air or other means to remove foreign matter.

3.7 FORMWORK TOLERANCES

A. Construct formwork to maintain tolerances required by ACI 117.

B. Construct and align formwork for elevator hoistway in accordance with ASME A17.1.

3.8 FORM REMOVAL

A. Do not remove forms or bracing until concrete has gained sufficient strength to carry its own weight and imposed loads.

B. Loosen forms carefully. Do not wedge pry bars, hammers, or tools against finish concrete surfaces scheduled for exposure to view.

C. Store removed forms to prevent damage to form materials or to fresh concrete. Discard damaged forms.

3.9 SCHEDULES

A. Walls Not Exposed to View: Site fabricated plywood coated with form oil.

B. Walls Exposed to View: Site fabricated plywood coated with form oil.

END OF SECTION 03 10 00

SECTION 03 20 00 - CONCRETE REINFORCEMENT

PART 1 - GENERAL

1.1 SECTION INCLUDES

A. Reinforcing steel for cast-in-place concrete.

B. Supports and accessories for steel reinforcement.

1.2 RELATED SECTIONS

A. Section 03 10 00 - Concrete Forms and Accessories.

B. Section 03 30 00 - Cast-in-Place Concrete.

C. Section 03 35 00 - Concrete Floor Finishing.

1.3 REFERENCES

A. ACI 318 - Building Code Requirements For Structural Concrete and Commentary; American Concrete Institute International.

B. ACI SP-66 - ACI Detailing Manual; American Concrete Institute International.

C. ASTM A 185/A 185M - Standard Specification for Steel Welded Wire Reinforcement, Plain, for Concrete.

D. ASTM A 615/A 615M - Standard Specification for Deformed and Plain Billet-Steel Bars for Concrete Reinforcement.

E. AWS D1.4/D1.4M - Structural Welding Code - Reinforcing Steel; American Welding Society.

F. CRSI (DA4) - Manual of Standard Practice; Concrete Reinforcing Steel Institute.

PART 2 - PRODUCTS

2.1 REINFORCEMENT

A. Reinforcing Steel: ASTM A 615/A 615M Grade 60 (420).
   1. Deformed billet-steel bars.
   2. Unfinished.

B. Steel Welded Wire Reinforcement: ASTM A 185/A 185M, plain type.
   1. Flat Sheets.
   2. Mesh Size and Wire Gage: As indicated on drawings.

C. Reinforcement Accessories:
   1. Tie Wire: Annealed, minimum 16 gage.
   2. Chairs, Bolsters, Bar Supports, Spacers: Sized and shaped for adequate support of reinforcement during concrete placement.
   3. Provide stainless steel, galvanized, plastic, or plastic coated steel components for placement within 1-1/2 inches of weathering surfaces.

2.2 FABRICATION

A. Fabricate concrete reinforcing in accordance with CRSI (DA4) - Manual of Standard Practice, ACI SP-66 - ACI Detailing Manual, and ACI 318.

B. Welding of reinforcement is permitted only with the specific approval of Architect/Engineer. Perform welding in accordance with AWS D1.4.

C. Locate reinforcing splices not indicated on drawings at point of minimum stress.
   1. Review locations of splices with Architect/Engineer.

PART 3 - EXECUTION

3.1 PLACEMENT

A. Place, support and secure reinforcement against displacement. Do not deviate from required position.

B. Do not displace or damage vapor barrier.

C. Accommodate placement of formed openings.

D. Maintain concrete cover around reinforcing as follows:
   1. Beams:1-1/2 inch
   2. Supported Slabs and Joists: 1 inch.
   3. Column Ties: 2 inch.
   4. Walls (exposed to weather or backfill): 2 inch.
   5. Footings and Concrete Formed Against Earth: 3 inch.
   6. Slabs on Fill: 3 inch.

E. Conform to applicable code for concrete cover over reinforcement.

3.2 FIELD QUALITY CONTROL

A. An independent testing agency, as specified in Section 01 45 23, will inspect installed reinforcement for conformance to contract documents before concrete placement.

END OF SECTION 03 20 00

SECTION 03 30 00 - CAST-IN-PLACE CONCRETE

PART 1 - GENERAL

1.1 SECTION INCLUDES

A. Concrete building frame members.

B. Concrete for composite floor construction.

C. Elevated concrete slabs.

D. Floors and slabs on grade.

E. Concrete shear walls, elevator shaft walls, foundation walls, and retaining walls.

F. Concrete foundations and anchor bolts.

G. Joint devices associated with concrete work.

H. Miscellaneous concrete elements, including equipment pads, light pole bases, flagpole bases, thrust blocks, and manholes.

1.2 RELATED SECTIONS

A. Section 03 10 00 - Concrete Forms and Accessories: Forms and accessories for formwork.

B. Section 03 20 00 - Concrete Reinforcement.

C. Section 03 39 00 - Concrete Curing.

D. Section 07 13 26 – Self-Adhering Sheet Waterproofing

E. Section 07 27 26 – Fluid-Applied Membrane Air Barriers, Vapor Impermeable

1.3 REFERENCES

A. ACI 211.1 - Standard Practice for Selecting Proportions for Normal, Heavyweight, and Mass Concrete; American Concrete Institute International.

B. ACI 211.2 - Standard Practice for Selecting Proportions for Structural Lightweight Concrete; American Concrete Institute International.

C. ACI 301 - Specifications for Structural Concrete for Buildings; American Concrete Institute International.

D. ACI 302.1R - Guide for Concrete Floor and Slab Construction; American Concrete Institute International.

E. ACI 304R - Guide for Measuring, Mixing, Transporting, and Placing Concrete; American Concrete Institute International.

F. ACI 305R - Hot Weather Concreting; American Concrete Institute International.

G. ACI 306R - Cold Weather Concreting; American Concrete Institute International.

H. ACI 318 - Building Code Requirements for Structural Concrete and Commentary; American Concrete Institute International.

I. ASTM C 33 - Standard Specification for Concrete Aggregates.

J. ASTM C 39/C 39M - Standard Test Method for Compressive Strength of Cylindrical Concrete Specimens.

K. ASTM C 94/C 94M - Standard Specification for Ready-Mixed Concrete.

L. ASTM C 143/C 143M - Standard Test Method for Slump of Hydraulic-Cement Concrete.

M. ASTM C 150 - Standard Specification for Portland Cement.

N. ASTM C 260 - Standard Specification for Air-Entraining Admixtures for Concrete.

O. ASTM C 330 - Standard Specification for Lightweight Aggregates for Structural Concrete.

P. ASTM C 494/C 494M - Standard Specification for Chemical Admixtures for Concrete.

Q. ASTM C 685/C 685M - Standard Specification for Concrete Made by Volumetric Batching and Continuous Mixing.

R. ASTM C 881/C 881M - Standard Specification for Epoxy-Resin-Base Bonding Systems for Concrete.

S. ASTM C 1059 - Standard Specification for Latex Agents for Bonding Fresh to Hardened Concrete.

T. ASTM C 1107 - Standard Specification for Packaged Dry, Hydraulic-Cement Grout (Non-shrink).

1.4 SUBMITTALS

A. See Section 01 33 00 - Administrative Requirements, for submittal procedures.

B. Product Data: Submit manufacturers' data on manufactured products showing compliance with specified requirements.

C. Samples: Submit two, 6 inch long samples of waterstops and construction joint devices, as applicable.

D. Manufacturer's Installation Instructions: Indicate installation procedures and interface required with adjacent construction for concrete accessories.

E. Project Record Documents: Accurately record actual locations of embedded utilities and components that will be concealed from view upon completion of concrete work.

1.5 QUALITY ASSURANCE

A. Perform work of this section in accordance with ACI 301 and ACI 318.
   1. Maintain one copy of each document on site.

B. Acquire cement from same source and aggregate from same source for entire project.

C. Follow recommendations of ACI 305R when concreting during hot weather.

D. Follow recommendations of ACI 306R when concreting during cold weather.

PART 2 - PRODUCTS

2.1 FORMWORK

A. Comply with requirements of Section 03 10 00.

2.2 REINFORCEMENT

A. Comply with requirements of Section 03 20 00.

2.3 CONCRETE MATERIALS

A. Cement: ASTM C 150, Type I - Normal Portland type.

B. Fine and Coarse Aggregates: ASTM C 33.

C. Lightweight Aggregate: ASTM C 330.

D. Water: Clean and not detrimental to concrete.

2.4 CHEMICAL ADMIXTURES

A. Do not use chemicals that will result in soluble chloride ions in excess of 0.1 percent by weight of cement.

B. Air Entrainment Admixture: ASTM C 260.

C. Chemical Admixtures: ASTM C 494, Type A - Water Reducing.
   1. Provide products manufactured by Euclid Chemical, or an approved substitute.
   2. Do not use chemicals that will result in soluble chloride ions in excess of 0.1 percent by weight of cement.

2.5 ACCESSORY MATERIALS

A. Reglets: Formed steel sheet, galvanized, with temporary filler to prevent concrete intrusion during placement.

B. Bonding Agent: ASTM C 1059, Type II acrylic non-redispersable type.

C. Epoxy Bonding System: ASTM C 881, type as required by project conditions.

D. Non-Shrink Grout: ASTM C 1107; premixed compound consisting of non-metallic aggregate, cement, water reducing and plasticizing agents.
   1. Minimum Compressive Strength at 48 Hours: 4,000 psi.
   2. Minimum Compressive Strength at 28 Days: 6,000 psi.

E. Curing Materials: Comply with requirements of Section 03 39 00.

2.6 BONDING AND JOINTING PRODUCTS

A. Joint Filler: Non-extruding, resilient asphalt impregnated fiberboard or felt, min. 1/4 inch thick and/or as shown or specified elsewhere and 4 inches deep; tongue and groove profile.

B. Construction Joint Devices: Integral galvanized steel; 1/16 inch thick, formed to tongue and groove profile, knockout holes spaced at 6 inches, ribbed steel spikes with tongue to fit top screed edge.

C. Sealant and Primer: As specified in Section 07 92 00.

2.7 CONCRETE MIX DESIGN

A. Proportioning Normal Weight Concrete: Comply with ACI 211.1 recommendations.

B. Proportioning Structural Lightweight Concrete: Comply with ACI 211.2 recommendations.

C. Concrete Strength: Establish required average strength for each type of concrete on the basis of field experience or trial mixtures, as specified in ACI 301.
   1. For trial mixtures method, employ independent testing agency acceptable to Architect/Engineer for preparing and reporting proposed mix designs.

D. Admixtures: Add acceptable admixtures as recommended in ACI 211.1 and at rates recommended by manufacturer.

2.8 MIXING

A. On Project Site: Mix in drum type batch mixer, complying with ASTM C 685. Mix each batch not less than 1-1/2 minutes and not more than 5 minutes.

B. Transit Mixers: Comply with ASTM C 94/C 94M.

PART 3 - EXECUTION

3.1 EXAMINATION

A. Verify lines, levels, and dimensions before proceeding with work of this section.

3.2 PREPARATION

A. Coordinate placement of embedded items with erection of concrete formwork and placement of form accessories.

B. Where new concrete is to be bonded to previously placed concrete, prepare existing surface by cleaning with steel brush and applying bonding agent in accordance with manufacturer's instructions.

3.3 PLACING CONCRETE

A. Place concrete in accordance with ACI 304R.

B. Place concrete for floor slabs in accordance with ACI 302.1R.

C. Notify Architect/Engineer not less than 24 hours prior to commencement of placement operations.

D. Ensure reinforcement, inserts, waterstops, under-slab vapor retarder, embedded parts, and formed construction joint devices will not be disturbed during concrete placement.

E. Separate slabs on grade from vertical surfaces with joint filler.

F. Place joint filler in floor slab pattern placement sequence. Set top to required elevations. Secure to resist movement by wet concrete.

G. Extend joint filler from bottom of slab to within 1/2 inch of finished slab surface. Conform to Section 07 92 00 for finish joint sealer requirements.

H. Install joint devices in accordance with manufacturer's instructions.

I. Install construction joint devices in coordination with floor slab pattern placement sequence. Set top to required elevations. Secure to resist movement by wet concrete.

J. Install joint device anchors for expansion joint assemblies. Maintain correct position to allow joint cover to be flush with floor and wall finish.

K. Apply sealants in joint devices in accordance with Section 07 92 00.

L. Maintain records of concrete placement. Record date, location, quantity, air temperature, and test samples taken.

M. Place concrete continuously between predetermined expansion, control, and construction joints.

N. Do not interrupt successive placement; do not permit cold joints to occur.

O. Screed floors and slabs on grade level, maintaining surface flatness of maximum 1/4 inch in 10 ft.

3.4 CONCRETE FINISHING

A. Repair surface defects, including tie holes, immediately after removing formwork.

B. Unexposed Form Finish: Rub down or chip off fins or other raised areas 1/4 inch or more in height.

C. Exposed Form Finish: Rub down or chip off and smooth fins or other raised areas 1/4 inch or more in height.

D. Concrete Slabs: Finish to requirements of Section 03 35 00.

3.5 CURING AND PROTECTION

A. Comply with requirements of Section 03 39 00.

3.6 FIELD QUALITY CONTROL

A. An independent testing agency will perform field quality control tests, as specified in Section 01 45 23.

B. Provide free access to concrete operations at project site and cooperate with appointed firm.

C. Submit proposed mix design of each class of concrete to inspection and testing firm for review prior to commencement of concrete operations.

D. Tests of concrete and concrete materials may be performed at any time to ensure conformance with specified requirements.

E. Compressive Strength Tests: ASTM C 39/C 39M. For each test, mold and cure three concrete test cylinders. Obtain test samples for every 75 cu yd or less of each class of concrete placed.

F. Take one additional test cylinder during cold weather concreting, cured on job site under same conditions as concrete it represents.

G. Perform one slump test for each set of test cylinders taken, following procedures of ASTM C 143/C 143M.

3.7 DEFECTIVE CONCRETE

A. Test Results: The testing agency shall report test results in writing to Architect/Engineer and Contractor within 24 hours of test.

B. Defective Concrete: Concrete not conforming to required lines, details, dimensions, tolerances or specified requirements.

C. Repair or replacement of defective concrete will be determined by the Architect/Engineer. The cost of additional testing shall be borne by Contractor when defective concrete is identified.

D. Do not patch, fill, touch-up, repair, or replace exposed concrete except upon express direction of Architect/Engineer for each individual area.

END OF SECTION 03 30 00

SECTION 03 35 00 - CONCRETE FLOOR FINISHING

PART 1 - GENERAL

1.1 SECTION INCLUDES

A. Finishing slabs on grade and monolithic floor slabs.

1.2 RELATED SECTIONS

A. Section 03 30 00 - Cast-in-Place Concrete: Prepared concrete floors ready to receive finish.

B. Section 03 39 00 - Concrete Curing.

C. Section 07 92 00 - Joint Sealants.

1.3 REFERENCES

A. ACI 301 - Specifications for Structural Concrete for Buildings; American Concrete Institute International.

B. ACI 302.1R - Guide for Concrete Floor and Slab Construction; American Concrete Institute International.

1.4 SUBMITTALS

A. See Section 01 33 00 - Administrative Requirements, for submittal procedures.

B. Product Data: Provide data on concrete hardener and sealer, including information on compatibility of different products and limitations.

1.5 QUALITY ASSURANCE

A. Perform Work in accordance with ACI 301.
   1. Maintain one copy on project site.

1.6 DELIVERY, STORAGE, AND HANDLING

A. Deliver materials in manufacturer's sealed packaging, including application instructions.

1.7 PROJECT CONDITIONS

A. Coordinate the work with concrete floor placement and concrete floor curing.

1.8 ENVIRONMENTAL REQUIREMENTS

A. Temporary Lighting: Minimum 200 W light source, placed 8 feet above the floor surface, for each 425 sq ft of floor being finished.

B. Temporary Heat: Ambient temperature of 50 degrees F minimum.

C. Ventilation: Sufficient to prevent injurious gases from temporary heat or other sources affecting concrete.

PART 2 - PRODUCTS

2.1 COMPOUNDS - HARDENERS AND SEALERS

A. Membrane Sealer Compound: EUCOSIL Sealing, Hardening and Dustproofing Compound manufactured by The Euclid Chemical Company.

PART 3 - EXECUTION

3.1 EXAMINATION

A. Verify that floor surfaces are acceptable to receive the work of this section.

3.2 FLOOR FINISHING

A. Finish concrete floor surfaces in accordance with ACI 301 and ACI 302.1R.

B. Wood float surfaces that will receive stone flooring with full bed setting system.

C. Steel trowel surfaces that will receive carpeting, resilient flooring, or thin set tile.

D. Steel trowel surfaces that are scheduled to be exposed.

E. In areas with floor drains, maintain design floor elevation at walls; slope surfaces uniformly to drains at 1/8 inch per foot nominal or as indicated on drawings.

3.3 FLOOR SURFACE TREATMENT

A. Apply sealer to scheduled floor surfaces in accordance with manufacturer's instructions in two coats, with second coat at right angles to first coat.

3.4 TOLERANCES

A. An independent testing agency, as specified in Section 01 40 00, will inspect finished slabs for flatness.

B. Measure flatness of slabs in accordance with ACI 302.1R and to achieve the following tolerances:
   1. Maximum Variation of Surface Flatness for Exposed Concrete Floors: 1/8 inch in 10 ft.
   2. Maximum Variation of Surface Flatness Under Seamless Resilient Flooring: 1/8 inch in 10 ft.
   3. Maximum Variation of Surface Flatness Under Carpeting: 1/8 inch in 10 ft.

C. Correct the slab surface if tolerances are less than specified.

D. Correct defects by grinding or by removal and replacement of the defective work. Areas requiring corrective work will be identified. Re-measure corrected areas by the same process.

3.5 SCHEDULES

A. Membrane Sealer Compound: Concrete areas not scheduled to receive finish flooring in the Finish Schedule on the drawings.

END OF SECTION 03 35 50

SECTION 03 39 00 - CONCRETE CURING

PART 1 - GENERAL

1.1 SECTION INCLUDES

A. Initial and final curing of horizontal and vertical concrete surfaces.

1.2 RELATED SECTIONS

A. Section 03 30 00 - Cast-in-Place Concrete.

1.3 REFERENCES

A. ACI 301 - Specifications for Structural Concrete for Buildings; American Concrete Institute International.

B. ACI 302.1R - Guide for Concrete Floor and Slab Construction; American Concrete Institute International.

C. ACI 308R - Guide to Curing Concrete; American Concrete Institute International.

D. ASTM C 309 - Standard Specification for Liquid Membrane-Forming Compounds for Curing Concrete.

1.4 SUBMITTALS

A. See Section 01 33 00 - Administrative Requirements, for submittal procedures.

B. Product Data: Provide data on curing compounds, including compatibility of different products and limitations.

1.5 QUALITY ASSURANCE

A. Perform Work in accordance with ACI 301 and ACI 302.1R.

1.6 DELIVERY, STORAGE, AND HANDLING

A. Deliver curing materials in manufacturer's sealed packaging, including application instructions.

PART 2 - PRODUCTS

2.1 MATERIALS

A. Membrane Curing Compound: ASTM C 309 Type 1-D - Clear or translucent with fugitive dye, Class A.
   1. Dissipating resin type.

PART 3 - EXECUTION

3.1 EXAMINATION

A. Verify that substrate surfaces are ready to be cured.

3.2 EXECUTION - HORIZONTAL SURFACES

A. Cure floor surfaces in accordance with ACI 308.

B. Membrane Curing Compound: Apply curing compound in accordance with manufacturer's instructions in two coats, with second coat applied at right angles to first.

3.3 EXECUTION - VERTICAL SURFACES

A. Cure surfaces in accordance with ACI 308.

B. Membrane Curing Compound: Apply compound in accordance with manufacturer's instructions in two coats, with second coat applied at right angles to first.

3.4 PROTECTION OF FINISHED WORK

A. Do not permit traffic over unprotected floor surface.

END OF SECTION 03 39 00

SECTION 04 06 50 - MORTAR AND MASONRY GROUT

PART 1 - GENERAL

1.1 SECTION INCLUDES

A. Standard gray color mortar for concrete block masonry.

B. Water-repellent mortar for exterior masonry walls.

C. Grout for masonry.

1.2 RELATED SECTIONS

A. Section 04 20 00 – Reinforced Unit Masonry Installation of mortar and grout.

B. Section 08 11 13 - Steel Doors and Frames: Grouting steel door frames installed in masonry.

1.3 REFERENCES

A. ACI 530/ASCE 5/TMS 402 - Building Code Requirements For Masonry Structures; American Concrete Institute International.

B. ACI 530.1/ASCE 6/TMS 602 - Specification for Masonry Structures; American Concrete Institute International.

C. ASTM C 144 - Standard Specification for Aggregate for Masonry Mortar.

D. ASTM C 150 - Standard Specification for Portland Cement.

E. ASTM C 207 - Standard Specification for Hydrated Lime for Masonry Purposes.

F. ASTM C 270 - Standard Specification for Mortar for Unit Masonry.

G. ASTM C 404 - Standard Specification for Aggregates for Masonry Grout.

H. ASTM C 476 - Standard Specification for Grout for Masonry.

I. ASTM C 780 - Standard Test Method for Preconstruction and Construction Evaluation of Mortars for Plain and Reinforced Unit Masonry.

J. ASTM C 1019 - Standard Test Method of Sampling and Testing Grout.

1.4 SUBMITTALS

A. See Section 01 33 00 - Administrative Requirements, for submittal procedures.

B. Product Data: Include design mix and indicate whether the Proportion or Property specification of ASTM C 270 is to be used. Also include required environmental conditions and admixture limitations.

C. Samples: Submit two samples of mortar, illustrating mortar color and color range.

D. Reports: Submit reports on mortar indicating conformance of mortar to property requirements of ASTM C 270 and test and evaluation reports per ASTM C 780.

E. Reports: Submit reports on grout indicating conformance of component grout materials to requirements of ASTM C 476 and test and evaluation reports to ASTM C 1019.

F. Manufacturer's Certificate: Certify that products meet or exceed specified requirements.

1.5 QUALITY ASSURANCE

A. Comply with provisions of ACI 530/ASCE 5/TMS 402 and ACI 530.1/ASCE 6/TMS 602, except where exceeded by requirements of the contract documents.
   1. Maintain one copy of each document on project site.

1.6 DELIVERY, STORAGE, AND HANDLING

A. Maintain packaged materials clean, dry, and protected against dampness, freezing, and foreign matter.

1.7 ENVIRONMENTAL REQUIREMENTS

A. Maintain materials and surrounding air temperature to minimum 40 degrees F prior to, during, and 48 hours after completion of masonry work.

B. Maintain materials and surrounding air temperature to maximum 90 degrees F prior to, during, and 48 hours after completion of masonry work.

PART 2 - PRODUCTS

2.1 MATERIALS

A. Portland Cement for Concrete Block Masonry and Grout: ASTM C 150, Type Type I - Normal; standard gray color.

C. Hydrated Lime: ASTM C 207, Type S.

D. Mortar Aggregate: ASTM C 144.

E. Grout Aggregate: ASTM C 404.

F. Pigments for Colored Mortar: Iron or chromium oxides with demonstrated stability and colorfastness.
   1. Color: As required to match Architect/Engineer's color samples.

G. Water: Clean and potable.

H. Moisture-Resistant Admixture (for mortar used in exterior masonry walls): Water repellent compound designed to reduce capillarity.

1. Acceptable product: Dry-Block Mortar Admixture manufactured by W.R. Grace & Co..
2. Substitutions: See Section 01 60 00 - Product Requirements.

2.2 MORTAR MIXES

A. Mortar for Unit Masonry: ASTM C 270, Property Specification.
   1. Exterior masonry: Type N.
   2. Interior masonry: Type N.
   3. Pointing mortar: Type N with maximum 2 percent ammonium stearate or calcium stearate per cement weight.

B. Colored Mortar: Proportion selected pigments and other ingredients to match Architect/Engineer's sample, without exceeding manufacturer's recommended pigment-to-cement ratio.

2.3 MORTAR MIXING

A. Thoroughly mix mortar ingredients using mechanical batch mixer, in accordance with ASTM C 270 and in quantities needed for immediate use.

B. Maintain sand uniformly damp immediately before the mixing process.

C. Add mortar color and admixtures in accordance with manufacturer's instructions. Provide uniformity of mix and coloration.

D. Do not use anti-freeze compounds to lower the freezing point of mortar.

E. If water is lost by evaporation, re-temper only within two hours of mixing.

F. Use mortar within two hours after mixing at temperatures of 90 degrees F, or two-and-one-half hours at temperatures under 40 degrees F.

2.4 GROUT MIXES

A. 3,000 psi strength at 28 days; 8-10 inches slump; mix in accordance with ASTM C 476.
   1. Fine grout for spaces with smallest horizontal dimension of 2 inches or less.
   2. Coarse grout for spaces with smallest horizontal dimension greater than 2 inches.

2.5 GROUT MIXING

A. Thoroughly mix grout ingredients in quantities needed for immediate use in accordance with ASTM C 476 for fine and coarse grout.

B. Do not use anti-freeze compounds to lower the freezing point of grout.

2.6 PRECONSTRUCTION TESTING

A. Testing will be conducted by an independent test agency, in accordance with provisions of

Section 01 45 23.

B. Mortar Mixes: Test mortars prebatched by weight in accordance with ASTM C 780 recommendations for preconstruction testing.
   1. Test results will be used to establish optimum mortar proportions.

C. Grout Mixes: Test grout batches in accordance with ASTM C 1019 procedures.
   1. Test results will be used to establish optimum grout proportions.

PART 3 - EXECUTION

3.1 PREPARATION

A. Plug clean-out holes for grouted masonry. Brace masonry to resist wet grout pressure.

3.2 INSTALLATION

A. Install mortar and grout to requirements of Section 04 20 00.

B. Work grout into masonry cores and cavities to eliminate voids.

C. Do not install grout in lifts greater than 16 inches without consolidating grout by rodding.

D. Do not displace reinforcement while placing grout.

E. Remove excess mortar from grout spaces.

3.3 GROUTING

A. Use either high-lift or low-lift grouting techniques, at Contractor's option, subject to other limitations of contract documents.

B. Low-Lift Grouting:
   1. Limit height of pours to 12 inches.
   2. Limit height of masonry to 16 inches above each pour.
   3. Pour grout only after vertical reinforcing is in place; place horizontal reinforcing as grout is poured. Prevent displacement of bars as grout is poured.
   4. Place grout for each pour continuously and consolidate immediately; do not interrupt pours for more than 1-1/2 hours.

C. High-Lift Grouting:
   1. Verify that horizontal and vertical reinforcement is in proper position and adequately secured before beginning pours.
   2. Place grout for spanning elements in single, continuous pour.

END OF SECTION 04 06 50

SECTION 04 15 00 - MASONRY ACCESORIES

PART 1 - GENERAL

1.1 SECTION INCLUDES

A. Under this Specification Section, the Contractor/C.M. shall provide all labor, materials, tools and equipment necessary in order to complete the following items of work in accordance with the Contract Drawings and Specifications.

1. Provide and install all masonry horizontal joint reinforcing anchors, flashings, and control joints required in connection with the laid-up masonry work specified in this Division 4 and as and where indicated on the Contract Drawings.

1.2 SECTION INCLUDES

A. Mortar And Masonry Grout– Section 04 06 50.

B. Reinforced Masonry Units - Section 04 20 00.

C. Caulking and Sealants – Section 07 92 00.

1.3 REGULATORY REQUIREMENTS

A. All Work shall comply with ACI 530 “Building Code Requirements for Masonry Structures”.

1.4 REFERENCES

A. ACI 530/ASCE 5/TMS 402 - Building Code Requirements for Masonry Structures; American Concrete Institute International.

B. ACI 530.1/ASCE 6/TMS 602 - Specification For Masonry Structures; American Concrete Institute International.

C. ASTM A 82 - Standard Specification for Steel Wire, Plain, for Concrete Reinforcement.

D. ASTM A 153/A 153M - Standard Specification for Zinc Coating (Hot-Dip) on Iron and Steel Hardware.

E. ASTM A 615/A 615M - Standard Specification for Deformed and Plain Billet-Steel Bars for Concrete Reinforcement.

F. ASTM C 90 - Standard Specification for Loadbearing Concrete Masonry Units.

G. ASTM C 144 - Standard Specification for Aggregate for Masonry Mortar.

H. ASTM C 150 - Standard Specification for Portland Cement.

I. ASTM C 207 - Standard Specification for Hydrated Lime for Masonry Purposes.

J. ASTM C 270 - Standard Specification for Mortar for Unit Masonry.

K. ASTM C 404 - Standard Specification for Aggregates for Masonry Grout.

L. ASTM C 476 - Standard Specification for Grout for Masonry.

M. ASTM C 744 - Standard Specification for Prefaced Concrete and Calcium Silicate Masonry Units.

N. ASTM C 780 - Standard Test Method for Preconstruction and Construction Evaluation of Mortars for Plain and Reinforced Unit Masonry.

O. ASTM C 1019 - Standard Test Method for Sampling and Testing Grout.

P. ASTM D 226 - Standard Specification for Asphalt-Saturated Organic Felt Used in Roofing and Waterproofing.

1.5 SUBMITTALS

A. See Section 01 33 00 - Submittals, for submittal procedures.

B. Product Data: Provide data for masonry units, fabricated wire reinforcement, and mortar and grout.

1.6 QUALITY ASSURANCE

A. References:

1. All materials shall be in accordance with the latest edition of the applicable provisions of the American Society for Testing Materials (ASTM).

PART 2 - PRODUCTS

2.1 MATERIALS

A. Masonry reinforcement: Refer to Section 04 20 00.

B. Vertical masonry reinforcements, where called for on the Contract Drawings, shall conform to ASTM A615-90, Grade 60.

C. Masonry control joints shall be Regular Rapid Control Joint D/A 2001 as manufactured by Dur-O-Wal, Inc., or approved equal.

D. Head, sill and thru-wall flashing shall be 2 ounce copper coated paper, flexible waterproof, reinforced, equal to “Copper Armored Sisalkraft” as manufactured by the St. Regis Paper Company or approved equal.

E. Weephole material shall be ¼ inch diameter sash cord by Hohmann & Bernard, Inc.

PART 3 - EXECUTION

3.1 MASONRY REINFORCEMENT

A. In all masonry walls, provide continuous horizontal reinforcing in the following locations, properly lapped at the end joints and with all corners turned with prefabricated corner pieces.

1. The first bed joint immediately above and below all openings.

2. The bed joints of the first and second courses below the bearing line, when wall receives uniformly distributed floor or roof loads.

3. Every second bed joint (16 inches o.c.) throughout the remainder of such walls.

B. In walls with blockouts or masonry openings, lengths of reinforcing in the second bed joints above and below all openings need not be continuous but shall extend not less than two feet (2'-0") beyond openings in each direction.

C. Reinforcing shall be lapped a minimum of six (6") inches at all splices.

D. Vertical reinforcing shall be placed as shown on the Contract Drawings. All reinforcing bars shall be in place properly secured against displacement prior to the placement of wall grout.

E. Care should be taken to keep reinforcing clean of all greases, oil or other foreign materials, which might affect its bonding properties with mortar. Storage and handling shall be done carefully and in a manner to prevent the bending or wires.

3.2 CONTROL JOINTS

A. Install control joints in the locations shown on the Contract Drawings and in accordance with the manufacturer's standard details using jamb block. Joints shall be filled with mortar but shall be caulked as specified in Section 07 92 00 – Sealants.

3.3 FLASHING

A. Install thru-wall flashing at the head and sill of all openings in exterior walls, at the base of all exterior masonry building walls and above or below all wall openings and where indicated on the Contract Drawings.

B. Flashing shall be installed concealed by holding the outer edge back one-half (½") inch from the exterior face of the masonry.

C. Weepholes shall be installed in conjunction with all masonry flashing at twenty-four (24") inches o.c. horizontally in the head joints of the first course immediately above the flashing.

3.4 CLEAN-UP

A. Upon completion of the Work, all surplus materials, debris, tools and equipment shall be removed form the Project site.

END OF SECTION 04 15 00

SECTION 04 20 00 – REINFORCED UNIT MASONRY ASSEMBLIES

PART 1 - GENERAL

1.1 SECTION INCLUDES

A. In general, Contractor shall furnish all materials, equipment and labor necessary to complete the Work of this Specification Section and as and where indicated on the Contract Drawings.

1.2 SUMMARY

A. Concrete Block.

B. Face Brick.

C. Mortar and Grout.

D. Reinforcement and Anchorage.

E. Insulation.

F. Flashings.

G. Accessories.

1.3 REFERENCES

A. ACI 530/ASCE 5/TMS 402 - Building Code Requirements for Masonry Structures; American Concrete Institute International.

B. ACI 530.1/ASCE 6/TMS 602 - Specification for Masonry Structures; American Concrete Institute International.

C. ASTM A 82 - Standard Specification for Steel Wire, Plain, for Concrete Reinforcement.

D. ASTM A 153/A 153M - Standard Specification for Zinc Coating (Hot-Dip) on Iron and Steel Hardware.

E. ASTM A 615/A 615M - Standard Specification for Deformed and Plain Billet-Steel Bars for Concrete Reinforcement.

F. ASTM C 90 - Standard Specification for Loadbearing Concrete Masonry Units.

G. ASTM C 144 - Standard Specification for Aggregate for Masonry Mortar.

H. ASTM C 150 - Standard Specification for Portland Cement.

I. ASTM C 207 - Standard Specification for Hydrated Lime for Masonry Purposes.

J. ASTM C 270 - Standard Specification for Mortar for Unit Masonry.

K. ASTM C 404 - Standard Specification for Aggregates for Masonry Grout.

L. ASTM C 476 - Standard Specification for Grout for Masonry.

M. ASTM C 780 - Standard Test Method for Preconstruction and Construction Evaluation of Mortars for Plain and Reinforced Unit Masonry.

N. ASTM C 1019 - Standard Test Method for Sampling and Testing Grout.

O. ASTM C 578 - Type 1, Specification for Rigid Cellular Polystyrene Thermal Insulation.

P. ASTM C 90 - Specification for Load-Bearing Concrete Masonry Units.

Q. ASTM C 216 - Standard Specification for Facing Brick (Solid Masonry Units Made From Clay or Shale).

R. UL (FRD) - Fire Resistance Directory; Underwriters Laboratories, Inc.

1.4 SUBMITTALS

A. See Section 01 33 00 - Submittals, for submittal procedures.

B. Product Data: Provide data for masonry units, fabricated wire reinforcement, and mortar and grout.

C. Samples: Submit two samples of units with manufacturer’s uniform light grey color with smooth texture as approved.

D. Design Data: Indicate required mortar strength, unit assembly strength in each plane, and supporting test data.

E. Manufacturer's Certificate: Certify that masonry units meet or exceed specified requirements.

1.5 QUALITY ASSURANCE

A. Comply with provisions of ACI 530/ASCE 5/TMS 402 and ACI 530.1/ASCE 6/TMS 602, except where exceeded by requirements of the contract documents.

B. Fire Rated Assemblies: Conform to applicable code for fire rated masonry construction.

1.6 MOCK-UP

A. Construct each type of masonry wall as a mock-up panel sized 8 feet long by 6 feet high, which includes mortar and accessories, structural backup, reinforcement, grout, and flashing and weeps.

B. Locate where directed.

C. Do not proceed with masonry construction until the Owner approved the mock-up.

D. Mock-ups may remain as part of the Work.

1.7 PRE-INSTALLATION MEETING

A. Convene two weeks before starting work of this section.

B. Invite the following participants: masonry subcontractors, flashing installers, masonry suppliers and manufacturers, integral water repellent admixture manufacturer. Advise the Architect and Owner of the scheduled meeting date.

C. Issue minutes of the pre-installation meeting to all attendees, the Architect, and the Owner.

1.8 DELIVERY, STORAGE AND HANDLING

A. Deliver, handle, and store masonry units by means that will prevent mechanical damage and contamination by other materials.

B. Handle and store units in protective cartons or trays. Do not remove from protective packaging until ready for installation.

1.9 ENVIRONMENTAL REQUIREMENTS

A. Maintain materials and surrounding air temperature to minimum 40 degrees F prior to, during, and 48 hours after completion of masonry work.

B. Maintain materials and surrounding air temperature to maximum 90 degrees F prior to, during, and 48 hours after completion of masonry work.

PART 2 - PRODUCTS

2.1 CONCRETE MASONRY UNITS

A. Concrete Block: Comply with referenced standards and as follows:
   1. Size: Standard units with nominal face dimensions of 16 x 8 inches and nominal

depths as indicated on the drawings for specific locations.
2. Special Shapes: Provide non-standard blocks configured for corners, control joint edges, and other detailed conditions.
3. Load-Bearing Units: ASTM C 90.
   a. Hollow block.
   b. Grade N
   c. Type I – Moisture-controlled; medium weight.
4. Concrete Block Faces: Manufacturer's standard color and texture, unless otherwise noted.
5. Concrete Block Faces: Manufacturer's uniform light grey color with smooth texture as approved.
6. Fire Rated Masonry Units (Elevator Shaft and Fire Stair Enclosures): As indicated on drawings.

2.2 FACING BRICK UNITS

A. Exterior Wall: ASTM C 216, Type FBX, Grade SW.

B. Basis of Design: Manufacturer TBD
   1. Type: Face Brick
   2. Color 1: TBD; Color 2: TBD
   3. Texture: TBD
   4. Size: Standard 3 5/8" D x 2 1/4" H x 7 5/8" L

2.3 MORTAR AND GROUT MATERIALS

A. Mortar and grout: As noted on the Foundation Drawing F-0, Masonry Assembly Notes.
   1. Mortar color for Facing Brick Units: TBD

.
2.4 REINFORCEMENT AND ANCHORAGE

A. Reinforcing Steel: ASTM A 615/A 615M Grade 60 (420) deformed billet bars; galvanized.

B. Single Wythe and Multiple Wythe Non-Cavity Wall Joint Reinforcement: Truss type; ASTM A 82 steel wire, hot dip galvanized after fabrication to ASTM A 153/A 153M, Class B; 0.1483 inch side rods with 0.1483 inch cross rods; width as required to provide not more than 1 inch and not less than 1/2 inch of mortar coverage on each exposure.
   1. Manufacturers:
      a. Dur-O-Wal, Inc.
      b. Hohmann & Barnard, Inc.
      c. Masonry Reinforcing Corporation of America.
      d. Substitutions: See Section 01 60 00 - Product Requirements.

C. Multiple Wythe Cavity Wall Seismic Type Joint Reinforcement: 170-2X Truss Eye-Wire adjustable reinforcement with 2X-Hooks (Pintles) in accordance with UL design (see drawings); stainless steel wire conforming to ASTM A 580/A 580M Type 304; 0.187 inch side

rods with 0.187 inch cross rods and 0.187 inch continuous wire at seismiclip; width as required to provide not more than 1 inch and not less than 1/2 inch of mortar coverage on each exposure.
1. Manufacturers:
a. Hohmann & Barnard, Inc.
b. Dur-O-Wal, Inc.
c. Masonry Reinforcing Corporation of America.
d. Substitutions: See Section 01 60 00 - Product Requirements.

D. Strap Anchors: Bent steel shape, hot dip galvanized to ASTM A 153/A 153M, Class B-2. Types that permit differential movement between masonry and building frame.
1. Manufacturers:
a. Dur-O-Wal, Inc.
b. Heckmann Building Products, Inc.
c. Hohmann & Barnard, Inc.
d. Substitutions: See Section 01 60 00 - Product Requirements.

E. L-Anchors at Fire Wall: L-Anchor with Hole and Slot #341-B, 1/8-inch thick, Zinc Alloy 710 for use as a fire wall anchor, dimensions as noted on drawings.
1. Manufacturers:
a. Heckmann Building Products, Inc.
b. Substitutions: See Section 01 60 00 - Product Requirements.

2.4 FLASHINGS

A. Flashing System: Hohmann & Barnard, Inc. Flex-Flash Flashing System consisting of Flex-Flash "peal and stick" flashing, Mortar Trap (at bottom of cavity), Foam-Tite Seal Stainless Steel Drip Plates Type FTSA (Type FTSA-LB for use with lip brick) with Flash-Adhere Strip on top surface for precise and permanent placement of flashing, and #NS closed cell neoprene sponge compressible filler.

2.5 ACCESSORIES

A. Joint Filler: Closed cell type; oversized 50 percent to joint width; self-expanding; as indicated inch wide x by maximum lengths available.
1. Manufacturers:
a. Dur-O-Wal, Inc.
b. Hohmann & Barnard, Inc.
c. Substitutions: See Section 01 60 00 - Product Requirements.

B. Weeps: Insect resistant honeycomb type.
1. Manufacturers:
a. Hohmann & Barnard, Inc.; Product #QV - Quadro-Vent, color as selected by Architect from manufacturer’s standard, size 3/8” x 3-5/8" x 3-5/8".
b. Substitutions: See Section 01 60 00 - Product Requirements.

C. Mortar Collection and Suspension System: Hohmann & Barnard, Inc. Mortar Trap, manufactured from high-quality polypropylene strands woven into a 90% open mesh, used

with flashing to break up mortar droppings and prohibit mortar from preventing the free flow of water to weep holes.

D. Cleaning Solution: Non-acidic, not harmful to masonry work or adjacent materials.

PART 3 - EXECUTION

3.1 EXAMINATION

A. Verify that field conditions are acceptable and are ready to receive masonry.

B. Verify that related items provided under other sections are properly sized and located.

C. Verify that built-in items are in proper location, and ready for roughing into masonry work.

3.2 PREPARATION

A. Direct and coordinate placement of metal anchors supplied for installation under other sections.

B. Clean reinforcement of loose rust.

C. Provide temporary bracing during installation of masonry work. Maintain in place until building structure provides permanent bracing.

3.3 COURSING

A. Establish lines, levels, and coursing indicated. Protect from displacement.

B. Maintain masonry courses to uniform dimension. Form vertical and horizontal joints of uniform thickness.

C. Concrete Masonry Units:
1. Bond: Running.
2. Coursing: One unit and one mortar joint to equal 8 inches except as otherwise indicated on drawings.
3. Mortar Joints: Concave.

D. Brick Units:
1. Bond: Running.
2. Coursing: Three units and three mortar joints to equal 8 inches except as otherwise indicated on drawings.
3. Mortar Joints: Concave.

3.4 PLACING AND BONDING

A. Lay solid masonry units in full bed of mortar, with full head joints, uniformly jointed with other work.

B. Lay hollow masonry units with face shell bedding on head and bed joints.

C. Buttering corners of joints or excessive furrowing of mortar joints is not permitted.

D. Remove excess mortar as work progresses.

E. Interlock intersections and external corners, except for units laid in stack bond.

F. Do not shift or tap masonry units after mortar has achieved initial set. Where adjustment must be made, remove mortar and replace.

G. Perform job site cutting of masonry units with proper tools to provide straight, clean, unchipped edges. Prevent broken masonry unit corners or edges.

H. Cut mortar joints flush where resilient base is scheduled or cavity insulation vapor barrier adhesive is applied or exterior insulation and finish system is applied.

I. Isolate masonry partitions from vertical structural framing members with a control joint.

J. Isolate top joint of masonry partitions from horizontal structural framing members and slabs or decks with compressible joint filler.

3.5 WEEPS

A. Install weeps in masonry exposed to rain water at maximum 24 inches on center horizontally above through-wall flashing, above shelf angles and lintels, and at bottom of walls.

3.6 REINFORCEMENT AND ANCHORAGE

A. Reinforcement Bars: Secure at locations indicated and to avoid displacement during grouting. Minimum spacing between bars or to masonry surfaces shall be one bar diameter.

B. Joint Reinforcement: Install horizontal joint reinforcement 16 inches on center.
   1. Place masonry joint reinforcement in first and second horizontal joints above and below openings. Extend minimum 16 inches each side of opening.
   2. Place continuous joint reinforcement in first and second joint below top of walls.
   3. Lap joint reinforcement ends minimum 6 inches.

C. Reinforced Hollow Unit Masonry: Keep vertical cores to be grouted clear of mortar, including bed area of first course.

1. Bond Beams: At bond beams or other locations for horizontally reinforced masonry, provide special masonry units or saw to accommodate reinforcement.

3.7 MASONRY FLASHINGS

A. Whether or not specifically indicated, install masonry flashing to divert water to exterior at all locations where downward flow of water will be interrupted.
   1. Examples include – but are not limited to:
      a. At the head and sill of all openings in exterior walls.
      b. At the base of all exterior masonry building walls.
      c. Above or below all wall openings.
      d. At other locations where indicated on the Drawings.
   2. Extend flashings a minimum of 6 inches above top of cavity mortar diverter.
   3. Extend flashings full width at such interruptions and at least 4 inches into adjacent masonry or turn up at least 4 inches to form watertight pan at non-masonry construction.
   4. Remove or cover protrusions or sharp edges that could puncture flashings.
   5. Seal lapped ends and penetrations of flashing before covering with mortar.

B. Extend metal flashings through exterior face of masonry and turn down to form drip.

C. Extend laminated flashings to within 1/4 inch of exterior face of masonry.

D. Lap end joints of flashings at least 4 inches and seal watertight with mastic or elastic sealant.

E. Weep Holes/Cavity Vents: Install at horizontal spacing indicated on Drawings, in the head joints of the first course immediately above the flashing. Install corresponding cavity vents in the head joints of the masonry course that occurs at the top of the cavity - directly above its respective weep vent.

F. Cavity Mortar Diverter: Install at base of cavity, and at all weep vent and/or flashing locations, as recommended by the Cavity Mortar Diverter Manufacturer, to prevent mortar droppings from blocking weep and cavity vents.

G. Mortar/Grout Stop: Install where indicated on Drawings.

H. Do not permit mortar to drop or accumulate into cavity air space or to plug weep/cavity vents.

I. After mortar has cured, trim exposed edge of flashing flush with the exterior face of the masonry.

3.8 PARGING

A. Mortar: Parge in two coats, using Type S or N mortar, to total thickness of not less than 1/2 inch.

B. Finishing: Trowel to dense, hard surface.

C. Curing: Damp-cure for at least 24 hours.
.

3.9 LINTELS

A. Install loose steel lintels over openings where indicated.

B. Install precast concrete lintels bearing on masonry where indicated.

C. Install reinforced unit masonry lintels over openings where loose steel lintels or precast lintels are not scheduled.
1. Openings to 42 inches: Place two, No. 3 reinforcing bars 1 inch from bottom web.
2. Openings from 42 inches to 78 inches: Place two, No. 5 reinforcing bars 1 inch from bottom web.
3. Openings over 78 inches: Reinforce openings as detailed and as approved.
4. Do not splice reinforcing bars.
5. Support and secure reinforcing bars from displacement. Maintain position within 1/2 inch of dimensioned position.
6. Place and consolidate grout fill without displacing reinforcing.
7. Allow masonry lintels to attain specified strength before removing temporary supports.

D. Maintain minimum 8 inch bearing on each side of opening.

3.10 GROUTED COMPONENTS

A. Reinforce bond beams with No. 6 bars unless otherwise indicated. Place as indicated.

B. Lap splices minimum 24 bar diameters.

C. Support and secure reinforcing bars from displacement. Maintain position within 1/2 inch of dimensioned position.

D. Place and consolidate grout fill without displacing reinforcing.

E. At bearing locations, fill masonry cores with grout for a minimum 12 inches either side of opening.

3.11 CONTROL AND EXPANSION JOINTS

A. Unless otherwise noted, provide control joints in all types of concrete masonry units at a maximum spacing of 20 feet on center on exterior locations, and 30 feet on center on interior locations.

B. Do not continue horizontal joint reinforcement through control joints.

C. Install preformed control joint device in continuous lengths. Seal butt and corner joints in accordance with manufacturer's instructions.

D. Size control joint in accordance with Section 07 92 00 for sealant performance.

3.12 BUILT-IN WORK

A. As work progresses, install built-in metal door frames, fabricated metal frames, and window frames and other items to be built into the work and furnished under other sections.

B. Install built-in items plumb, level, and true to line.

C. Bed anchors of metal door and glazed frames in adjacent mortar joints. Fill frame voids solid with grout.
   1. Fill adjacent masonry cores with grout minimum 12 inches from framed openings.

D. Do not build into masonry construction organic materials that are subject to deterioration.

3.13 TOLERANCES

A. For single wythe block masonry walls, flatness tolerances cannot be achieved for both wall surfaces. Therefore, the exterior wall surface shall require the more stringent tolerance.

B. Maximum Variation from Unit to Adjacent Unit: 1/16 inch.

C. Maximum Variation from Plane of Wall: 1/4 inch in 10 ft and 1/2 inch in 20 ft or more.

D. Maximum Variation from Plumb: 1/4 inch per story non-cumulative; 1/2 inch in two stories or more.

E. Maximum Variation from Level Coursing: 1/8 inch in 3 ft and 1/4 inch in 10 ft; 1/2 inch in 30 ft.

F. Maximum Variation of Joint Thickness: 1/8 inch in 3 ft.

G. Maximum Variation from Cross Sectional Thickness of Walls: 1/4 inch.

3.14 CUTTING AND FITTING

A. Cut and fit for chases, pipes, conduit, and other items as required. Coordinate with other sections of work to provide correct size, shape, and location.

B. Obtain approval prior to cutting or fitting masonry work not indicated or where appearance or strength of masonry work may be impaired.

3.15 FIELD QUALITY CONTROL

A. An independent testing agency will perform field quality control tests, as specified in Section 01 45 23.

B. Mortar Tests: Test mortar in accordance with recommended procedures in ASTM C 780, testing with minimum frequency of one per building day.

C. Test and evaluate grout in accordance with ASTM C 1019 procedures.
   1. Test frequency: One prism for each 3,000 square feet of masonry, or fraction thereof, grouted in any one day.

3.16 CLEANING

A. Remove excess mortar and mortar smears as work progresses.

B. Replace defective mortar. Match adjacent work.

C. Clean soiled surfaces with specified cleaning solution.

D. Use non-metallic tools in cleaning operations.

3.17 PROTECTION OF FINISHED WORK

A. Without damaging completed work, provide protective boards at exposed external corners, which are subject to damage by construction activities.

END OF SECTION 04 20 00

SECTION 04 25 13 – THIN BRICK PANEL SYSTEMS

PART 1 - GENERAL

1.1 SECTION INCLUDES

A. Thin Brick with Continuous Insulation Panel System.

1.2 RELATED SECTIONS

A. Section 03 30 00 - Cast-In-Place Concrete.
B. Section 04 20 00 - Masonry Units.
C. Section 05 12 00 - Structural Steel.
D. Section 05 40 00 - Cold-Formed Metal Framing.
E. Section 06 10 00 - Rough Carpentry.
F. Section 07 21 00 - Building Insulation.
G. Section 07 62 00 - Sheet Metal Flashing and Trim.
H. Section 07 92 00 - Joint Sealants.

1.3 REFERENCES

ASTM International (ASTM):

1. ASTM C 216 - Standard Specification for Facing Brick (Solid Masonry Units Made from Clay or Shale); severe weather grade kiln-fired brick.
2. ASTM C 270 - Standard Specification for Mortar for Unit Masonry; specially formulated mortar mix.
3. ASTM C 513 - Standard Test Method for Obtaining and Testing Specimens of Hardened Lightweight Insulating Concrete for Compressive Strength; for bricks, minimum compression strength of 1000 PSI.
4. ASTM C 577 - Standard Specification for Adhesives for Fastening Gypsum Wallboard to Wood Framing.
5. ASTM C 666 - Standard Test Method for Resistance of Concrete to Rapid Freezing and Thawing, brick, pass.
6. ASTM C 1088 - Standard Test Method for Thin Veneer Brick Units Made from Clay or Shale; severe weather grade kiln-fired brick.
7. ASTM E 84 - Standard Test Method for Surface Burning Characteristics of Building Materials.
8. ASTM E 754 - Standard Test Method for Pullout Resistance of Ties and anchors Embedded in Masonry Mortar Joints.

1.4 SUBMITTALS

A. Submit under provisions of Section 01 33 00.

B. Product Data: Manufacturer's data sheets on each product to be used, including:

1. Manufacturer's installation instructions, showing required preparation and installation procedures.
2. Storage and handling requirements and recommendations.
3. Installation methods.
4. Cleaning and maintenance instructions.
5. Manufacturer’s Warranty

C. Shop Drawings: Provide drawings prepared by the applicator/contractor showing the wall layout, typical details, connections, expansion joints, plus the installation sequence shall be submitted shall be submitted to the architect upon request. Shop drawings shall include the following:

1. Submit elevations, sections and details of assembly components; indicate locations, configurations, large scale plans.
2. Show sequence of installation, attachment details, and weather sealing.
3. Show location of members, other items of work and related work of other Sections to be coordinated with work of this section.
4. Submit detail drawings depicting proper installation and flashing techniques. Coordinate locations with those found on the Contract Drawings.

D. Quality Assurance Submittals:

1. Copies of test reports by independent laboratories verifying the performance of the system shall be submitted to the Architect upon request.
2. The certified applicator/contractor shall submit a copy of his current ' Certificate of Trained Applicator' from the manufacturer to the architect prior to the application of the Metal Grid Panel System.

E. Verification Samples: For each finish product specified, two samples, minimum size 12 inches by 12 inches, representing actual products, styles, colors, patterns, and textures.

F. Warranty: Copy of manufacturer's standard warranty.

1.5 QUALITY ASSURANCE

A. Single Source Requirements: Provide primary and secondary components required for installation of thin brick systems from a single source.

B. Manufacturer Qualifications: Minimum 20 years’ experience manufacturing similar products.

C. Installer Qualifications:

1. Received instruction by manufacturer's personnel in the installation of the thin brick panel system and received a ' Certificate of Trained Applicator' from the manufacturer.
2. Five-Years experienced and competent in the installation of brick type materials.
3. Submit a list of recently completed projects using similar materials.

D. Performance Testing:

1. TAS 201 - Large Missile Impact Test

2. TAS 202 - Uniform Static Pressure Test
3. TAS 203 - Cyclic Wind Pressure Load Test
4. E84 - Flame Smoke Test
5. E754 - Shear Pull Test
6. NFPA 285 - All combustible components being required & used in part or as part of the projects composite wall assembly (such as; insulation, weather resistive barrier, sheathing & adhesives) required to meet the NFPA 285 requirements unless otherwise exempt (see Part 2 “Products” 2.2 H. Insulation Board & 2.2 I. WRB).

E. Mock-Up: Provide a mock-up for evaluation of surface preparation techniques and application workmanship.

1. The mock-up shall demonstrate the proposed range of color, texture, and workmanship to be expected in completed work.
2. Locate mock-up on site in location as directed by Architect. Clean the sample panel installation using the same materials and tools as planned for the final construction.
3. Obtain Architect's acceptance of mock-up before start of work.
4. Do not proceed with remaining work until workmanship, color, style, pattern, and texture are approved by Architect.
5. Modify mock-up area as required to produce acceptable work.
6. Remove mock-up at the completion of the work.
7. Mock-up may be incorporated into the work.

F. Conduct a pre-installation meeting to verify all products, application procedures, site conditions and warranty terms. Conduct in accordance with Section 01 31 19.

1.6 DELIVERY, STORAGE, AND HANDLING

A. Materials shall be delivered to the location in unopened factory containers. Upon arrival, materials shall be inspected for damage and manufacturer informed of any discrepancies. Deficient materials shall not be used.

B. Materials shall be stored in a protected location and safeguarded from damage.

1.7 PROJECT CONDITIONS

A. The ambient air temperature shall remain at 36 degrees F (2.2 degrees C) or greater for at least 72 hours after the application of mortar.

B. Flashing and sealants shall be installed immediately after completion of the system. For outdoor application, provide temporary protection as needed from precipitation, wind, airborne dust and debris, and similar items.

C. Provide protection of surrounding areas and adjacent surfaces from application of brick panel systems.

1.8 COORDINATION / SCHEDULING

A. The work in this section requires close coordination with related specifications sections and trades. Proper labor and equipment shall be employed to ensure a continuous operation

satisfactory to the architect.

B. Coordinate installation of brick panel systems with related wall elements, including, windows, doors, louvers, ducts, signage, flashings, sealants, weather resistive barrier, sealant tapes and membranes, supporting wall framing and sheathing, surface mounted objects, and similar items.

1. Coordinate with installation of flashing, coping and sealants to ensure that materials are installed in accordance with manufacturer's instructions.
2. Coordinate with installation of surface-mounted objects to ensure that watertight seal is provided.

1.9 WARRANTY

A. Manufacturer's Warranty: Standard 20-year limited warranty, which include all system components provided by the manufacturer.

PART 2 - PRODUCTS

2.1 MANUFACTURERS

A. Brick-it located at: 17 Central Avenue, Hauppauge, NY; Sales & Service: 631-244-3993, Technical 631-591-9222; Email: Info@brickit.com. Web: www.brickit.com or approved equal.
B. Requests for substitutions will be considered in accordance with provisions of Section 01 60 00.

2.2 BRICK PANEL SYSTEMS

A. Brick Panel Systems: System for aligning and locking thin brick to a substrate that does not depend on adhesive for its performance.

1. System Type: Brick-It (G90) Continuous Insulation Panel System.

B. Metal Grid System Panels: Galvanized steel metal components formed to align brick courses and to support and ensure a mechanical bond of each brick in place.

1. Panels shall be chem-dry treated and be a minimum 0.0149-inch (0.36 mm) thickness with continuous carrying brick ledges (every course of brick) with minimum thickness per ledge: 0.028 inch (0.71 mm).
2. Panels shall have a continuous interlock every third course, minimum thickness, 0.042 inch (1.07 mm).
3. Panels shall be able to fold out corners, door and window sections, and have a continuous linear array of holes to receive adhesive and have a continuous array of mortar receptors to lock in mortar mix.
4. Panels shall be designed to carry brick load evenly on entire wall surface without the use of footings, starter angles or special corner sections.
5. Size: Spacing for Brick Veneer 2-1/4”.

C. Brick: Kiln-fired brick 1/2 to 1 inch (13 mm to 25 mm) nominal thickness, cut from face brick specified in Section 04 20 00.

1. Brick to match color and manufacturer of Facing Brick Units specified in Section 04 20 00.

D. Mortar: Brick-it Type “S” premixed mortar to meet ASTM C 270 or approved equal.

1. Mortar to match the mortar color specified for Facing Brick Units in Section 04 20 00.

E. Fasteners: Brick-it non-corrosive ribbed nails, screws or staples, designed for applicable substrate or approved equal.

F. Adhesives: Brick-it high solid, solvent based silicone that remains flexible and unaffected by freeze-thaw cycles. Cut brick requires the use of Brick-it silicone adhesive only.

G. Water: Shall be clean, potable, and free of all foreign matter.

H. Insulation Board: Owens Corning 2.5” XPS or approved equal.

I. Weather Resistive Barrier: Tremco ExoAir 230 or approved equal.

J. Drainage Mat: Kingspan Green Guard DC14.

K. Cleaner: As approved for use by Thin Brick Manufacturer.

L. Masonry Sealer: Manufacturer's recommended sealer, applied to brick and mortar joints.

M. Sealant Systems: As acceptable to Brick-it, color as selected by Architect. Joint design and surface preparation shall be based on sealant manufacturer's recommendation and project conditions.

PART 3 - EXECUTION

3.1 EXAMINATION

A. Prior to installation, examine substrate for conditions including soundness, tightness of connections, crumbling or looseness of surfaces, and projections. Verify substrate is acceptable to authorities having jurisdiction prior to installation of the work of this Section.

B. Report deviations from the requirements of project specifications or other conditions that might adversely affect the installation to the Contractor. Do not start work until deviations are corrected.

3.2 SUBSTRATE PREPARATION

A. Repair damaged or cracked surfaces. Prepare substrate to be flat, within 1/8 inch (3.2 mm) within any 4 foot (1.2 m) square area.

B. Remove surface contaminants on concrete and concrete masonry surfaces, such a form

release oils, dust, paint, waterproofing, and similar items. If required by manufacturer, apply conditioner to substrate by sprayer or roller to chalking or excessively absorptive surfaces.

3.3 INSTALLATION

A. Install in accordance with manufacturer's written instructions as applicable to each type of substrate required. Install bricks to specified pattern and mortar.

B. Metal Grid: Apply to substrate surface in the true level rows, interlock at every panel. Install such that panel does not extend 1/4 inch (6 mm) below the face of the brick.

1. Offset vertical grid joints and leave 1/4 inch (6 mm) between joints. Install for brick to extend past grid by 1/2 inch (13 mm) at grid ends.
2. Fasten grid system to a sound substrate or wall with a non-corrosive fastener; minimum penetration of substrate is 1 inch (25 mm). Concrete and masonry walls require fasteners and adhesive on rear of metal grid.
3. Install fasteners on an average of 3 per square foot (0.1 square meters) and at top and bottom courses vertically and a maximum of 16 inches (406 mm) on center horizontally.

C. Adhesive:

1. Brick shall be spaced to ensure that the head joints do not exceed 5/8 inch (16 mm) or fall below 1/4 inch (6.5 mm). The optimum head joint size is 7/16 inch (11 mm).
2. Use adhesive supplied by manufacturer. For exterior installations, apply 3/8 inch (9.5 mm) vertical dabs. For interior applications, apply 3/8-inch (9.5 mm) beads over adhesive holes as shown in manufacturer's literature.
3. Do not use excessive adhesive as this will cause bricks to tilt away from grid. Check periodically and repress to grid.
4. Allow adhesive 24 hours to dry before mortaring.

D. Brick Placement:

1. Applications Requiring Corners:
   a. Start with corner brick, or a corner brick at each corner if there are corners at both ends.
   b. Install bricks adjusting vertical joints for fit or cut brick as required.

2. Applications that do not required corners:
   a. Install bricks in direction of arrows as shown in manufacturer's literature.
   b. Place adhesive on two rows of grid in the middle of wall.
   c. Adjust vertical joints to fit area, 3/8 inch to 1/2 inch (9.5 mm to 13 mm), to fit wall space.
   d. Cut end bricks as needed. Install bricks horizontally than vertically.
   e. Draw a plumb vertical line every 48 inches (1219 mm) to help maintain spacing.

E. Mortar:

1. Allow adhesive to fully cure before mortaring joints.
2. Use clean, cold water to mix mortar. Flush hoses regularly; especially during warm weather.

3. Slightly dampen bricks before mortaring; especially during hot weather.
4. Mix properly and test a sample area.
5. Do not apply mortar to brick panel system when the ambient outdoor temperature is below 36 degrees F (2.2 degrees C) unless temporary protection and heat can be provided for a minimum of 36 hours after installation.
6. Apply mortar into horizontal joints first, then vertical joints. Over fill joints with enough mortar to avoid leaving any voids. When mortar attains a firm consistency joints shall be tooled.
7. Use the joint tool supplied with the mortar kit to strike joints. Press the tool against the joint and strike joint to fill and seal mortar to edges of brick. Strike the vertical joints first than horizontal joints. Provide concave finish. Fill voids.

F. Sealer: Apply only after mortar joints are thoroughly cured. Allow a minimum of 2 weeks prior to application.

1. Seal exterior applications in accordance with manufacturer's recommendations.
2. Seal interior applications in accordance with manufacturer's recommendations.

3.4 FIELD QUALITY CONTROL

A. Arrange and pay for project inspection by Brick-It or its authorized representative to confirm warranty will be provided. Notify Architect 48 hours in advance of inspection.

3.5 CLEANING AND PROTECTION

A. Cleaning: As recommended by manufacturer. Do not begin cleaning until mortar joints are properly cured. Allow a minimum of 24 to 72 hours. Soak bricks and mortar joints before applying cleaner.
1. Thoroughly flush wall after cleaning.
2. Clean adjacent materials and surfaces of all foreign materials resulting from the work of this Section.

B. Protection:
1. Protect installed materials from water impinging on the visible surface, chinking, sealants joints, and from behind.
2. Protect installed materials from dust, dirt, precipitation, freezing, damaged, spilled materials, and continuous high humidity until they are fully dry.

END OF SECTION 04 25 13

SECTION 05 12 00 - STRUCTURAL STEEL

PART 1 – GENERAL

1.1 SECTION INCLUDES

A. Structural steel framing members, support members, angles, tees, structural tubes and struts.

B. Base plates, shear stud connectors and cap plates, expansion joint plates and connections.

C. Grouting under base plates.

1.2 RELATED SECTIONS

A. Section 05 31 00 - Steel Deck: Support framing for small openings in deck.

B. Section 05 50 00 - Metal Fabrications: Steel fabrications affecting structural steel work.

C. Section 05 51 00 - Metal Stairs: Steel fabrications for securing metal stairs to structural steel work.

1.3 REFERENCES

A. AISC M016 - ASD Manual of Steel Construction; American Institute of Steel Construction, Inc.

B. AISC S303 - Code of Standard Practice for Steel Buildings and Bridges; American Institute of Steel Construction, Inc.

C. AISC S348 - Specification for Structural Joints Using ASTM A325 or A490 Bolts.

D. ASTM A 36/A 36M - Standard Specification for Carbon Structural Steel.

E. ASTM A 53/A 53M - Standard Specification for Pipe, Steel, Black and Hot-Dipped, Zinc-Coated, Welded and Seamless.

F. ASTM A 108 - Standard Specification for Steel Bars, Carbon, Cold Finished, Standard Quality.

G. ASTM A 123/A 123M - Standard Specification for Zinc (Hot-Dip Galvanized) Coatings on Iron and Steel Products.

I. ASTM A 325 - Standard Specification for Structural Bolts, Steel, Heat Treated, 120/105 ksi Minimum Tensile Strength.

J. ASTM A 325M - Standard Specification for High-Strength Bolts for Structural Steel Joints (Metric).

K. ASTM A 490 - Standard Specification for Heat-Treated Steel Structural Bolts, 150 ksi Minimum Tensile Strength.

L. ASTM A 490M - Standard Specification for High-Strength Steel Bolts, Classes 10.9 and 10.9.3, for Structural Steel Joints (Metric).

M. ASTM A 501 - Standard Specification for Hot-Formed Welded and Seamless Carbon Steel Structural Tubing.

N. ASTM A 514/A 514M - Standard Specification for High-Yield Strength, Quenched and Tempered Alloy Steel Plate, Suitable for Welding.

O. ASTM A 563 - Standard Specification for Carbon and Alloy Steel Nuts.

P. ASTM A 563M - Standard Specification for Carbon and Alloy Steel Nuts (Metric).

Q. ASTM A 992/A 992M - Standard Specification for Structural Steel Shapes.

R. ASTM A 1008 - Standard Specification for Steel, Sheet, Cold-Rolled, Carbon, Structural, High-Strength Low-Alloy and High-Strength Low-Alloy with Improved Formability.

S. ASTM A 1011 - Standard Specification for Steel, Sheet and Strip, Hot-Rolled, Carbon, Structural, High-Strength Low-Alloy and High-Strength Low-Alloy with Improved Formability.

T. ASTM C 1107 - Standard Specification for Packaged Dry, Hydraulic-Cement Grout (Non-shrink).

U. ASTM E 94 - Standard Guide for Radiographic Examination.

V. ASTM E 164 - Standard Practice for Ultrasonic Contact Examination of Weldments.

W. ASTM E 165 - Standard Test Method for Liquid Penetrant Examination.

X. ASTM E 709 - Standard Guide for Magnetic Particle Examination.

Y. ASTM F 436 - Standard Specification for Hardened Steel Washers.

Z. ASTM F 959 - Standard Specification for Compressible-Washer-Type Direct Tension Indicators for Use with Structural Fasteners.

AA. AWS A2.4 - Standard Symbols for Welding, Brazing, and Nondestructive Examination; American Welding Society.

AB. AWS D1.1 - Structural Welding Code - Steel; American Welding Society.

AC. SSPC-Paint 15 - Steel Joist Shop Primer; Society for Protective Coatings.

AD. UL (FRD) - Fire Resistance Directory; Underwriters Laboratories Inc.

1.4 SUBMITTALS

A. See Section 01 33 00 - Administrative Requirements, for submittal procedures.

B. Shop Drawings:
   1. Indicate profiles, sizes, spacing, locations of structural members, openings, attachments, and fasteners.
   2. Connections and connections not detailed.
   3. Indicate cambers, loads, and bolts.
   4. Indicate welded connections with AWS A2.4 welding symbols. Indicate net weld lengths.

C. Manufacturer's Mill Certificate: Certify that products meet or exceed specified requirements.

D. Mill Test Reports: Indicate structural strength, destructive test analysis and non-destructive test analysis.

E. Welders Certificates: Certify welders employed on the Work, verifying AWS qualification within the previous 12 months.

1.5 QUALITY ASSURANCE

A. Fabricate structural steel members in accordance with AISC "ASD Manual of Steel Construction".

B. Comply with Section 10 of AISC "Code of Standard Practice for Steel Buildings and Bridges" for

architecturally exposed structural steel.

C. Maintain one copy of each document on site.

D. Fabricator: Company specializing in performing the work of this section with minimum 10 years of documented experience.

E. Erector: Company specializing in performing the work of this section with minimum 10 years of documented experience.

F. Design connections not detailed on the drawings under direct supervision of a Professional Structural Engineer experienced in design of this work and licensed in the State in which the Project is located.

PART 2 - PRODUCTS

2.1 MATERIALS

A. Structural Steel Members: ASTM A 36/A 36M.

B. Rolled Steel Structural Shapes: ASTM A 992/A 992M.

C. Hot-Formed Structural Tubing: ASTM A 501, seamless or welded.

D. Steel Bars: ASTM A 108.

E. Steel Plate: ASTM A 514/A 514M.

F. Steel Sheet: ASTM A 1011, Designation SS, Grade 30 hot-rolled, or ASTM A 1008, Designation SS, Grade 30 cold-rolled.

G. Pipe: ASTM A 53/A 53M, Grade B, Finish black.

H. Shear Stud Connectors: Made from ASTM A 108 Grade 1015 bars.

I. Sag Rods: ASTM A 36/A 36M.

J. Carbon Steel Bolts and Nuts: F1554.

K. High-Strength Bolts, Nuts, and Washers: ASTM A 325 (ASTM A 325M), Type 1, medium carbon, galvanized.

L. High-Strength Structural Bolts: ASTM A 490 (ASTM A 490M), with matching ASTM A 563 (ASTM A 563M) nuts and ASTM F 436 washers; Type 1 alloy steel.

M. Anchor Bolts: ASTM A 307, Grade C.

N. High-Strength Anchor Bolts: ASTM A 325, Type 1 medium carbon, plain.

O. Load Indicator Washers: Provide washers complying with ASTM F 959 at all connections requiring high-strength bolts.

P. Welding Materials: AWS D1.1; type required for materials being welded.

Q. Sliding Bearing Plates:Teflon coated.

R. Grout: Non-shrink, non-metallic aggregate type, complying with ASTM C 1107 and capable of developing a minimum compressive strength of 7,000 psi at 28 days.

S. Shop and Touch-Up Primer: SSPC-Paint 15, complying with VOC limitations of authorities having jurisdiction.

T. Touch-Up Primer for Galvanized Surfaces: Fabricator's standard, complying with VOC limitations of authorities having jurisdiction.

2.2 FABRICATION

A. Shop fabricate to greatest extent possible.

B. Continuously seal joined members by continuous welds. Grind exposed welds smooth.

C. Fabricate connections for bolt, nut, and washer connectors.

D. Develop required camber for members.

2.3 FINISH

A. Interior Structural Steel Surfaces: Shop prime structural steel members (two coats). Do not prime surfaces that will be field welded or high strength bolted.
   1. Prepare the exposed structural components for finish painting in accordance with SSPC SP6 Commercial Blast Cleaning.

B. Exterior Structural Steel Surfaces at the Entrance Canopy: Shop prime structural steel members (two coats). Do not prime surfaces that will be field welded or high strength bolted.
   1. Prepare the exposed structural components for finish painting in accordance with SSPC SP6 Commercial Blast Cleaning.

2.4 SOURCE QUALITY CONTROL AND TESTS

A. High-Strength Bolts: Provide testing and verification of shop-bolted connections in accordance with AISC "Specification for Structural Joints Using ASTM A325 or A490 Bolts", testing at least 30 percent of bolts at each connection.

B. Welded Connections: Visually inspect all shop-welded connections and test at least 10 percent of welds using the following:
   1. Ultrasonic testing performed in accordance with ASTM E 164.

PART 3 - EXECUTION

3.1 EXAMINATION

A. Verify that conditions are appropriate for erection of structural steel and that the work may properly proceed.

3.2 ERECTION

A. Erect structural steel in compliance with AISC "Code of Standard Practice for Steel Buildings and Bridges".

B. Allow for erection loads, and provide sufficient temporary bracing to maintain structure in safe condition, plumb, and in true alignment until completion of erection and installation of permanent bracing.

C. Field weld components indicated on drawings and shop drawings.

D. Use carbon steel bolts only for temporary bracing during construction, unless otherwise specifically permitted on drawings. Install high-strength bolts in accordance with AISC

"Specification for Structural Joints Using ASTM A325 or A490 Bolts".

E. Do not field cut or alter structural members without approval of Architect/Engineer.

F. After erection of shop primed structural steel, prime welds, abrasions, and surfaces not shop primed (two coats).

G. Grout solidly between column plates and bearing surfaces, complying with manufacturer's instructions for non-shrink grout. Trowel grouted surfaces smooth, splaying neatly to 45 degrees.

3.3 ERECTION TOLERANCES

A. Maximum Variation from Plumb: 1/4 inch per story, non-cumulative.

B. Maximum Offset from True Alignment: 1/4 inch.

3.4 FIELD QUALITY CONTROL

A. An independent testing agency will perform field quality control tests, as specified in Section 01 45 23.

B. High-Strength Bolts: Provide testing and verification of field-bolted connections in accordance with AISC "Specification for Structural Joints Using ASTM A325 or A490 Bolts", testing at least 30 percent of bolts at each connection.

C. Welded Connections: Visually inspect all field-welded connections and test at least 10 percent of welds using one of the following:
   1. Radiographic testing performed in accordance with ASTM E 94.
   2. Ultrasonic testing performed in accordance with ASTM E 164.
   3. Liquid penetrant inspection performed in accordance with ASTM E 165.
   4. Magnetic particle inspection performed in accordance with ASTM E 709.

END OF SECTION 05 12 00

SECTION 05 31 00 - STEEL DECK

PART 1 - GENERAL

1.1 SECTION INCLUDES

A. Roof deck.

B. Composite floor deck.

C. Supplementary framing for openings up to and including 18 inches.

D. Bearing plates and angles.

1.2 RELATED SECTIONS

A. Section 03 20 00 - Concrete Reinforcement.

B. Section 03 30 00 - Cast-in-Place Concrete: Concrete topping over metal deck.

C. Section 05 12 00 - Structural Steel: Support framing for openings larger than 18 inches.

D. Section 05 12 00 - Structural Steel: Steel angle concrete stops at deck edges.

1.3 REFERENCES

A. ASTM A 36/A 36M - Standard Specification for Carbon Structural Steel.

B. ASTM A 653/A 653M - Standard Specification for Steel Sheet, Zinc-Coated (Galvanized) or Zinc-Iron Alloy-Coated (Galvannealed) by the Hot-Dip Process.

C. AWS D1.1 - Structural Welding Code - Steel; American Welding Society.

D. AWS D1.3 - Structural Welding Code - Sheet Steel; American Welding Society.

E. SDI (DM) - Publication No. 30, Design Manual for Composite Decks, Form Decks, Roof Decks and Cellular Floor Deck Systems with Electrical Distribution; Steel Deck Institute.

F. SSPC-Paint 20 - Zinc-Rich Primers (Type I, "Inorganic," and Type II, "Organic"); The Society for Protective Coatings.

G. UL (FRD) - Fire Resistance Directory; Underwriters Laboratories Inc.

1.4 PERFORMANCE REQUIREMENTS

A. Select and design metal deck in accordance with SDI Design Manual.

B. Calculate to structural working stress design and structural properties specified.

C. Maximum Vertical Deflection of Floor Deck: 1/360.

D. Maximum Vertical Deflection of Roof Deck: 1/240.

E. Maximum Lateral Deflection of Diaphragms: 1/500 of the story height.

1.5 SUBMITTALS

A. See Section 01 33 00 - Administrative Requirements, for submittals procedures.

B. Shop Drawings: Indicate deck plan, support locations, projections, openings, reinforcement, cellular raceways and outlet box locations, pertinent details, and accessories.

C. Product Data: Provide deck profile characteristics, dimensions, structural properties, and finishes.

D. Certificates: Certify that meet or exceed specified requirements.

E. Submit manufacturer's installation instructions.

F. Welders Certificates: Certify welders employed on the Work, verifying AWS qualification within the previous 12 months.

1.6 QUALITY ASSURANCE

A. Design deck layout, spans, fastening, and joints under direct supervision of a Professional Structural Engineer experienced in design of this work and licensed in the State in which the Project is located.

B. Installer Qualifications: Company specializing in performing the work of this Section with minimum 10 years of experience.

1.7 DELIVERY, STORAGE, AND HANDLING

A. Cut plastic wrap to encourage ventilation.

B. Store deck on dry wood sleepers; slope for positive drainage.

PART 2 - PRODUCTS

2.1 STEEL DECK

A. Roof Deck: See Drawing S-0 for all information, typical, unless otherwise noted.

B. Composite Floor Deck: See Drawing S-0 for all information, typical, unless otherwise noted.

2.2 ACCESSORY MATERIALS

A. Bearing Plates and Angles: ASTM A 36/A 36M steel, unfinished.

B. Welding Materials: AWS D1.1.

C. Fasteners: Galvanized hardened steel, self-tapping.

D. Weld Washers: Mild steel, uncoated, 3/4 inch outside diameter, 1/8 inch thick.

E. Touch-Up Primer for Galvanized Surfaces: SSPC-Paint 20, Type I - Inorganic, complying with VOC limitations of authorities having jurisdiction.

F. Flute Closures: Closed cell foam rubber, 1 inch thick; profiled to fit tight to the deck.

2.3 FABRICATED DECK ACCESSORIES

A. Sheet Metal Deck Accessories: Metal closure strips, wet concrete stops, and cover plates, 14 gage thick sheet steel; of profile and size as indicated; galvanized.

B. Cant Strips: Formed sheet steel, 14 gage thick, 45 degree slope, 3 1/2 inch nominal width and height, flange for attachment.

PART 3 – EXECUTION

3.1 EXAMINATION

A. Verify existing conditions prior to beginning work.

3.2 INSTALLATION

A. Erect metal deck in accordance with fire resistance classification, SDI Design Manual and manufacturer's instructions. Align and level.

B. On concrete and masonry surfaces provide minimum 4 inch bearing.

C. On steel supports provide minimum 3 inch bearing.

D. Fasten deck to steel support members at ends and intermediate supports at 12 inches on center maximum, parallel with the deck flute and at each transverse flute using welds.
   1. Welding: Use fusion welds through weld washers.

E. Clinch lock seam side laps.

F. At mechanically fastened male/female side laps fasten at 24 inches on center maximum.

G. Weld deck in accordance with AWS D1.3.

H. Provide reinforcing plates welded to metal deck at openings up to 9 inches.

I. At deck openings from 9 inches to 18 inches in size, provide 2 1/2 x 2 1/2 x 1/4 inch steel angle reinforcement. Place angles perpendicular to flutes; extend minimum two feet beyond each side of opening and fusion weld to deck at each flute.

J. Provide 2 1/2 x 2 1/2 x 1/4 inch steel angle framing welded to metal deck around all roof drains and roof overflow drains.

K. Where deck changes direction, install 6 inch minimum wide sheet steel cover plates, of same thickness as deck. Fusion weld 12 inches on center maximum.

L. At floor edges, install concrete stops upturned to top surface of slab, to contain wet concrete. Provide stops of sufficient strength to remain stationary without distortion.

M. At openings between deck and walls, columns, and openings, provide sheet steel closures and angle flashings to close openings.

N. Close openings above walls and partitions perpendicular to deck flutes with single row of foam cell closures.

O. Place metal cant strips in position and mechanically attach.

P. Immediately after welding deck and other metal components in position, coat welds, burned areas, and damaged surface coating, with touch-up primer.

END OF SECTION 05 31 00

SECTION 05 40 00 - COLD FORMED METAL FRAMING

PART 1 – GENERAL

1.1 SECTION INCLUDES

A. Cold-formed exterior wall framing.

1.2 RELATED SECTIONS

A. Section 07 27 26 - Fluid-Applied Membrane Air Barriers, Vapor Impermeable

1.3 REFERENCES

A. ASTM International (ASTM):
1. ASTM A 653 - Standard Specification for Steel Sheet, Zinc-Coated (Galvanized) or Zinc-Iron Alloy-Coated (Galvannealed) by the Hot-Dip Process.
2. ASTM A 780 - Standard Practice for Repair of Damaged and Uncoated Areas of Hot-Dip Galvanized Coatings.
3. ASTM A 1003 - Standard Specification for Steel Sheet, Carbon, Metallic- and Nonmetallic-Coated for Cold-Formed Framing Members.
4. ASTM B 633 - Standard Specification for Electrodeposited Coatings of Zinc on Iron and Steel.
5. ASTM C 954 - Standard Specification for Steel Drill Screws for the Application of Gypsum Panel Products or Metal Plaster Bases to Steel Studs from 0.033 inches to 0.112 inches in thickness.
6. ASTM C 955 - Standard Specification for Load-Bearing (Transverse and Axial) Steel Studs, Runners (Tracks), and Bracing or Bridging for Screw Application of Gypsum Panel Products and Metal Plaster Bases.
7. ASTM C 1007 - Standard Specification for Installation of Load Bearing (Transverse and Axial) Steel Studs and Related Accessories.
8. ASTM C 1513 - Standard Specification for Steel Tapping Screws for Cold-Formed Steel Framing Connections.

B. AISI - Standard for Cold-Formed Steel Framing General Provisions.

C. AISI - North American Specification for the Design of Cold-Formed Steel Structural Members.

D. AWS D.1.3 - Structural Welding Code - Sheet Steel.

1.4 DESIGN REQUIREMENTS

A. Design steel in accordance with American Iron and Steel Institute Publication "Specification for the Design of Cold-Formed Steel Structural Members", except as otherwise shown or specified.

B. Design loads: As indicated on the Structural Drawings.

C. Design framing systems to withstand design loads without deflections greater than the following:

1. Exterior Walls: Lateral deflection of: L/360.

D. Design framing systems to provide for movement of framing members without damage or overstressing, sheathing failure, connection failure, undue strain on fasteners and anchors, or other detrimental effects when subject to a maximum ambient temperature change (range) of 67 degrees C (120 degrees F).
   1. Design framing system to accommodate deflection of primary building structure and construction tolerances.

1.5 SUBMITTALS

A. See Section 01 33 00 - Submittals, for submittal procedures.

B. Engineering Calculations: Submit calculations for loadings and stresses of system members and connections. Calculations shall be signed and sealed by an engineer registered in the state in which the project is located.

C. Shop Drawings: Submit layout and arrangement drawings showing all framing components, member layout and configuration, connection details and fastener sizes, quantity and arrangement. Shop drawings shall be signed and sealed by an engineer registered in the state in which the project is located.

D. Product Data: Provide data on standard framing members; describe materials and finish, product criteria, limitations.

E. Product Data: Provide manufacturer's data on factory-made framing connectors, showing compliance with requirements.

F. Manufacturer's Installation Instructions: Indicate special procedures, conditions requiring special attention.

1.6 QUALITY ASSURANCE

A. Contractor shall provide effective, full time quality control over all fabrication and erection complying with the pertinent codes and regulations of government agencies having jurisdiction.

B. Installer Qualifications: Installer experienced in performing work of this section who has specialized in installation of work similar to that required for this project.

C. Pre-installation Meetings: Conduct pre-installation meeting to verify project requirements, substrate conditions, and manufacturer's installation instructions.

D. Manufacturer Qualifications: Member in good standing of the Steel Framing Industry Association (SFIA).
   1. Products to be certified under an independent third party inspection program administered by an agency accredited by IAS to ICC-ES AC98 IAS Accreditation Criteria for Inspection Agencies.

E. Welding Standards: Comply with applicable provisions AWS D1.1 "Structural Welding Code - Steel" and AWS D1.3 "Structural Welding Code-Sheet Steel."

F. Qualify welding processes and welding operators in accordance with AWS "Standard Qualification Procedure."

1.7 DELIVERY, STORAGE AND HANDLING

A. Deliver materials in manufacturer's original, unopened, undamaged containers with identification labels intact.

B. Protect and store materials protected from exposure to rain, snow or other harmful weather conditions. Products to be handled per AISI's "Code of Standard Practice."

1.8 PROJECT CONDITIONS

A. Contractor shall be responsible for verifying all dimensions in the field prior to fabrication.

B. Verify that field measurements are as indicated on the drawings, and if not, notify the Architect of any discrepancies and do not proceed with work until proper direction is received.

C. Maintain environmental conditions (temperature, humidity, and ventilation) within limits recommended by manufacturer for optimum results. Do not install products under environmental conditions outside manufacturer's absolute limits.

PART 2 – PRODUCTS

2.1 MANUFACTURERS

A. Metal Framing:
1. Clark Dietrich Building Systems: www.clarkdietrich.com.
2. Marino-Ware: www.marinoware.com.
3. MiTek Industries, Inc: www.mii.com.
4. Substitutions: See Section 01 60 00 - Product Requirements.

2.2 COMPONENTS

A. Studs and Track: Cold-formed galvanized steel C-studs with punched web; U-shaped track in matching nominal width and compatible height.
1. Gage and depth: As required to meet specified performance levels and as indicated on the drawings as minimum gages and depths required.

B. Framing Component Accessories: Provide the following accessories as required for a complete system.
1. Flat strapping.
2. Angles, plates, sheets.
3. Custom brake-formed shapes.

C. Fasteners: Self-drilling, self-tapping screws; Steel, complying with ASTM C 1513; Galvanized coating, plated or oil-phosphate coated complying with ASTM B 633 as needed for required corrosion resistance.

D. Touch-Up Paint: Complying with ASTM A 780 - Standard Practice for Repair of Damaged and Uncoated Areas of Hot-Dip Galvanized Coatings. Zinc rich, containing 95-percent metallic zinc.

2.3 MATERIALS

A. Cold-Formed Steel Sheet: Complying with ASTM A 1003/A 1003M; unless indicated otherwise.

B. Galvanized Coating: CP60 coating minimum, complying with ASTM C 955.

2.4 FABRICATION

A. General: Framing components may be pre-assembled into panels prior to erecting.

B. Fabricate panels square, with components attached in a manner so as to prevent racking or distortion.

C. Cut all framing components squarely for attachment to perpendicular members, or as required for an angular fit against abutting members. Hold members positively in place until properly fastened.

D. Provide insulation as specified elsewhere in all double jamb studs and double header members, which will not be accessible to the insulation contractor.

E. Axially Loaded Studs:
   1. Install studs to have full bearing against inside track web (1/8 inches (3.2 mm) maximum gap) prior to stud and track attachment.
   2. Splices in axially loaded studs are not permitted.

F. Fasteners: Fasten components using self-tapping screws or welding.

G. Welding: Welding is permitted on 18 gauge or heavier material only.
   1. Specify welding configuration and size on the Structural Calculation submittal.
   2. Qualify welding operators in accordance with Section 6.0 of AWS D.1.3.
   3. Touch up all welds with zinc-rich paint in compliance with ASTM A 780.

PART 3 – EXECUTION

3.1 EXAMINATION

A. Verify that substrate surfaces are ready to receive work.

B. Prior to installation, inspect previous work of all other trades. Verify that all work is complete and accurate to the point where this installation may properly proceed in strict accordance with framing shop drawings.

3.2 ERECTION

A. General Erection Requirements:
   1. Install cold-formed framing in accordance with requirements of ASTM C 1007.
   2. Weld in compliance with AWS D.1.3.
   3. Install in compliance with applicable sections of the AISI's Standard for Cold-Formed Steel Framing General Provisions.

B. Wall Systems:
   1. Erect framing and panels plumb, level and square in strict accordance with approved shop drawings.

2. Handle and lift prefabricated panels in a manner so as not to cause distortion in any member.
3. Anchor runner track securely to the supporting structure as shown on the erection drawings. Install concrete anchors only after full compressive strength has been achieved. Provide a sill sealer or gasket barrier between all concrete and steel connections.
4. Butt all track joints. Securely anchor abutting pieces of track to a common structural element, or butt-weld or splice them together.
5. Align and plumb studs, and securely attach to the flanges or webs of both upper and lower tracks except when vertical movement is specified.
6. Install jack studs or cripples below window sills, above window and door heads, at freestanding stair rails and elsewhere to furnish support, securely attached to supporting members.
7. Attach wall stud bridging in a manner to prevent stud rotation. Space bridging rows according to manufacturer's recommendations.
8. Frame wall openings to include headers and supporting studs as shown in the drawings.
9. Provide temporary bracing until erection is completed.
10. Provide stud walls at locations indicated on plans as "shear walls" for frame stability and lateral load resistance.
11. Where indicated in the drawings, provide for structural vertical movement using a vertical slide clip or other means in accordance with manufacturer's recommendations.

3.3 ERECTION TOLERANCES

A. Vertical alignment (plumbness) of studs shall be within 1/960th (1/8 inch in 10 feet) of the span.

B. Horizontal alignment (levelness) of walls shall be within 1/960th (1/8 inch in 10 feet) of their respective lengths.

C. Spacing of studs shall not be more than 1/8 inch plus or minus from the designed spacing providing that the cumulative error does not exceed the requirements of the finishing materials.

D. Prefabricated panels shall be not more than 1/8 inch plus or minus out of square within the length of that panel.

3.4 PROTECTION

A. Protect installed products until completion of project.

B. Touch-up, repair or replace damaged products before Substantial Completion.

END OF SECTION 05 40 00

SECTION 05 50 00 - METAL FABRICATIONS

PART 1 – GENERAL

1.1 SECTION INCLUDES

A. Shop fabricated steel items.

B. Elevator pit ladders.

1.2 RELATED SECTIONS

A. Section 03 30 00 – Cast-In-Place Concrete: Placement of metal fabrications in concrete.

B. Section 04 20 00 – Unit Masonry Assemblies: Placement of metal fabrications in masonry.

C. Section 05 51 00 – Metal Stairs.

D. Section 05 51 33 – Aluminum Ladders.

E. Section 09 91 23 – Paints and Coatings: Paint finish.

1.3 REFERENCES

A. ANSI A14.3 - American National Standard for Ladders -- Fixed -- Safety Requirements.

B. ASTM A 36/A 36M - Standard Specification for Carbon Structural Steel.

C. ASTM A 123/A 123M - Standard Specification for Zinc (Hot-Dip Galvanized) Coatings on Iron and Steel Products.

D. ASTM A 283/A 283M - Standard Specification for Low and Intermediate Tensile Strength Carbon Steel Plates.

E. ASTM A 325 - Standard Specification for Structural Bolts, Steel, Heat Treated, 120/105 ksi Minimum Tensile Strength.

F. ASTM A 325M - Standard Specification for Structural Bolts, Steel, Heat Treated 830 MPa Tensile Strength (Metric).

G. AWS A2.4 - Standard Symbols for Welding, Brazing, and Nondestructive Examination; American Welding Society.

H. AWS D1.1 - Structural Welding Code - Steel; American Welding Society.

I. SSPC-Paint 15 - Steel Joist Shop Primer; Society for Protective Coatings.

J. SSPC-Paint 20 - Zinc-Rich Primers (Type I, "Inorganic," and Type II, "Organic"); Society for Protective Coatings.

1.4 SUBMITTALS

A. See Section 01 33 00 - Submittals, for submittal procedures.

B. Shop Drawings: Indicate profiles, sizes, connection attachments, reinforcing, anchorage, size and type of fasteners, and accessories. Include erection drawings, elevations, and details where applicable.
   1. Indicate welded connections using standard AWS A2.4 welding symbols. Indicate net weld lengths.

C. Welders' Certificates: Submit certification for welders employed on the project, verifying AWS qualification within the previous 12 months.

PART 2 – PRODUCTS

2.1 MATERIALS - STEEL

A. Steel Sections: ASTM A 36/A 36M.

B. Plates: ASTM A 283.

C. Bolts, Nuts, and Washers: ASTM A 325 (ASTM A 325M), Type 1, galvanized to ASTM A 153/A 153M where connecting galvanized components.

D. Welding Materials: AWS D1.1; type required for materials being welded.

E. Shop and Touch-Up Primer: SSPC-Paint 15, complying with VOC limitations of authorities having jurisdiction.

F. Touch-Up Primer for Galvanized Surfaces: SSPC-Paint 20, Type I - Inorganic, complying with VOC limitations of authorities having jurisdiction.

2.2 FABRICATION

A. Fit and shop assemble items in largest practical sections, for delivery to site.

B. Fabricate items with joints tightly fitted and secured.

C. Continuously seal joined members by continuous welds.

D. Grind exposed joints flush and smooth with adjacent finish surface. Make exposed joints butt tight, flush, and hairline. Ease exposed edges to small uniform radius.

E. Exposed Mechanical Fastenings: Flush countersunk screws or bolts; unobtrusively located; consistent with design of component, except where specifically noted otherwise.

F. Supply components required for anchorage of fabrications. Fabricate anchors and related components of same material and finish as fabrication, except where specifically noted otherwise.

2.3 FABRICATED ITEMS

A. Elevator Pit Ladders: Steel; in compliance with ANSI A14.3; with mounting brackets and attachments; galvanized finish.
   1. Side Rails: 3/8 x 2 inches members spaced at 20 inches. Extend side rails 42 inches above top rung.

2. Rungs: 3/4 inch diameter solid round bar spaced 12 inches on center.
3. Space rungs 7 inches from wall surface when the projected dimension does not interfere with the elevator's clear path of travel. Coordinate with elevator manufacturer for maximum allowable projection.

B. Lintels: Structural steel, as detailed; galvanized finish.

2.4 FINISHES - STEEL

A. Clean surfaces of rust, scale, grease, and foreign matter prior to finishing.

B. Prime Painting: One coat.

C. Galvanizing of Structural Steel Members: Galvanize after fabrication to ASTM A 123/A 123M requirements.

D. Galvanizing of Non-structural Items: Galvanize after fabrication to ASTM A 123/A 123M requirements.

2.5 FABRICATION TOLERANCES

A. Squareness: 1/8 inch maximum difference in diagonal measurements.

B. Maximum Offset Between Faces: 1/16 inch.

C. Maximum Misalignment of Adjacent Members: 1/16 inch.

D. Maximum Bow: 1/8 inch in 48 inches.

E. Maximum Deviation From Plane: 1/16 inch in 48 inches.

PART 3 – EXECUTION

3.1 EXAMINATION

A. Verify that field conditions are acceptable and are ready to receive work.

3.2 PREPARATION

A. Clean and strip primed steel items to bare metal where site welding is required.

B. Supply setting templates to the appropriate entities for steel items required to be cast into concrete or embedded in masonry.

3.3 INSTALLATION

A. Install items plumb and level, accurately fitted, free from distortion or defects.

B. Provide for erection loads, and for sufficient temporary bracing to maintain true alignment until completion of erection and installation of permanent attachments.

C. Field weld components indicated on drawings.

D. Perform field welding in accordance with AWS D1.1.

E. Obtain approval prior to site cutting or making adjustments not scheduled.

F. After erection, prime welds, abrasions, and surfaces not shop primed or galvanized, except surfaces to be in contact with concrete.

3.4 ERECTION TOLERANCES

A. Maximum Variation From Plumb: 1/4 inch per story, non-cumulative.

B. Maximum Offset From True Alignment: 1/4 inch.

C. Maximum Out-of-Position: 1/4 inch.

END OF SECTION 05 50 00

SECTION 05 50 50 - MISCELLANEOUS STEEL

PART 1 – GENERAL

1.1 SCOPE OF WORK

A. Under this Section of the Specifications the Contractor shall provide all labor, materials, tools and equipment necessary to detail, fabricate and erect all miscellaneous steel and metal items not covered by other steel specification section in particular, but which are called for herein and are necessary for the completion of the Work as shown on the Contract Drawings. All materials furnished under this Section shall be installed under this Section unless otherwise noted herein.

B. Work includes, but is not limited to, the following:

1. Column anchor bolts.
2. Miscellaneous bolts.
3. Bearing plates for structural steel and steel joists.
4. Steel pipe guard posts.
   a. Refer to Section 05 51 00 for guards at concrete filled metal pan stairs.
5. Steel handrails, handrail pipe sleeves, and wall brackets.
   a. Refer to Section 05 51 00 for handrails and brackets at concrete filled metal pan stairs.
6. Metal nosings at concrete steps.
7. Pipe and fabricated counter supports.
8. Elevated equipment and pneumatic tube supports.
9. Broom brackets.
10. Steel guardrails, including terminals and accessories.
11. Steel pit covers.
12. Dock and ramp edge channels with anchor studs and plats.
13. ADC protector box.
14. Photobeam brackets.
15. Wall and slab edge angle with anchor studs and plates.
16. Lintels.
17. Embedded plates in masonry and/or concrete.
18. Hoist support beams.

1.2 RELATED WORK SPECIFIED ELSEWHERE

A. Structural Steel – See Section – 05 12 00.

B. Cast-in-Place Concrete – See Section 03 30 00.

C. Reinforced Unit Masonry System – See Section 04 20 00.

D. Metal Fabrications – See Section 05 50 00.

E. Concrete Filled Metal Pan Stairs – See Section 05 51 00.

1.3 SUBMITTALS

A. Shop Drawings: The Contractor shall prepare and submit in accordance with Section 01 33 00 detailed Shop Drawings for all work. The Shop Drawings shall include location and installation drawings and complete member fabrication and connection details.

B. Steel Fabricator/contractor to provide shop drawings with calculations by a Licensed Structural Engineer licensed to practice structural engineering in the State of New York, who shall sign and seal the shop drawings pertaining to the stairs and all structural steel items listed in the above Section 1.1.

C. See Section 01 33 00 - Submittals, for submittal procedures.

D. Welders' Certificates: Submit certification for welders employed on the project, verifying AWS qualification within the previous 12 months.

1.4 QUALITY ASSURANCE

A. Design, fabrication and erection of miscellaneous steel shall be in accordance with the provisions of the American Institute of Steel Construction (AISC) Specifications for the Design, Fabrication and Erection of Structural Steel for Buildings, latest edition.

B. Materials shall be in accordance with applicable provisions of the American Society for Testing and Materials (ASTM).

C. Welding procedures and qualifications shall be in accordance with the American Welding Society (AWS), Structural Welding Code, AWS D.1, latest edition.

D. Preparation of and paining shall be in accordance with the Steel Structures Painting Council (SSPC), Steel Structures Painting Manual, latest edition.

E. Design, fabrication and construction of stairs, platforms and handrails shall be in accordance with the provisions of the Occupational Safety and Health Administration (OSHA), and applicable local building codes.

1.5 REFERENCES

A. ANSI A14.3 - American National Standard for Ladders -- Fixed -- Safety Requirements.

B. ASTM A 36/A 36M - Standard Specification for Carbon Structural Steel.

C. ASTM A 53/A 53M - Standard Specification for Pipe, Steel, Black and Hot-Dipped, Zinc-Coated, Welded and Seamless.

D. ASTM A 123/A 123M - Standard Specification for Zinc (Hot-Dip Galvanized) Coatings on Iron and Steel Products.

E. ASTM A 153/A 153M - Standard Specification for Zinc Coating (Hot-Dip) on Iron and Steel Hardware.

F. ASTM A 283/A 283M - Standard Specification for Low and Intermediate Tensile Strength Carbon Steel Plates.

G. ASTM A 325 - Standard Specification for Structural Bolts, Steel, Heat Treated, 120/105 ksi Minimum Tensile Strength.

H. ASTM A 325M - Standard Specification for Structural Bolts, Steel, Heat Treated 830 MPa Tensile Strength (Metric).

I. ASTM A 500 - Standard Specification for Cold-Formed Welded and Seamless Carbon Steel Structural Tubing in Rounds and Shapes.

J. AWS A2.4 - Standard Symbols for Welding, Brazing, and Nondestructive Examination; American Welding Society.

K. AWS D1.1 - Structural Welding Code - Steel; American Welding Society.

L. NAAMM MBG 531 - Metal Bar Grating Manual; The National Association of Architectural Metal Manufacturers.

M. SSPC-Paint 15 - Steel Joist Shop Primer; Society for Protective Coatings.

N. SSPC-Paint 20 - Zinc-Rich Primers (Type I, "Inorganic," and Type II, "Organic"); Society for Protective Coatings.

PART 2 - PRODUCTS

2.1 MATERIALS

A. All rolled shapes, plates and anchor bolts used in this work shall be new and shall conform to ASTM A36, unless noted otherwise. Steel Sections: ASTM A 36/A 36M.

B. All anchor bolts for the pre-engineered steel building shall conform to ASTM A36.

C. Plates: ASTM A 283.

D. Pipe: ASTM A 53/A 53M, Grade B Schedule 40, black finish.

E. Bolts, Nuts, and Washers: ASTM A 325 (ASTM A 325M), Type 1, galvanized to ASTM A 153/A 153M where connecting galvanized components.

F. Gratings: Comply with NAAMM MBG 531, galvanized, welded type, bar size as indicated on drawings. Provide abrasive nosing for stair treads.

G. Vehicular guardrails shall be American Association of State Highway and Transportation Officials (AASHTO) Type M-180, Class A, Type II, W-beam. Galvanize steel vehicular guardrails.

H. Studs for members cast into concrete shall be Nelson Stud Welding, Erico Products "Blue Arc," KSM Welding Systems, or "EPI Grate Clamp" fasteners, or acceptable equal.

I. Expansion anchors shall conform to Fed Spec FF-S-325, Group II, Type 3, Class 3; Group II, Type 4, Class 1; or Group VIII, Type 1 or Type 2, and shall be Hilti Kwik-Bolt, ITT Phillips Red Head wedge and sleeve anchors, Ramset Trubolt and Dynabolt, Drillco Maxi-Bolt, or acceptable equal.

J. Welding Materials: AWS D1.1; type required for materials being welded.

K. Shop and Touch-Up Primer: SSPC-Paint 15, complying with VOC limitations of authorities having jurisdiction.

L. Touch-Up Primer for Galvanized Surfaces: SSPC-Paint 20, Type I - Inorganic, complying with VOC limitations of authorities having jurisdiction.

2.2 FABRICATION

A. Fit and shop assemble items in largest practical sections, for delivery to site.

B. Fabricate items with joints tightly fitted and secured.

C. Grind exposed joints flush and smooth with adjacent finish surface. Make exposed joints butt tight, flush, and hairline. Ease exposed edges to small uniform radius.

D. Exposed Mechanical Fastenings: Flush countersunk screws or bolts; unobtrusively located; consistent with design of component, except where specifically noted otherwise.

E. Supply components required for anchorage of fabrications. Fabricate anchors and related components of same material and finish as fabrication, except where specifically noted otherwise.

2.3 FABRICATED ITEMS

A. Stairs and Landings Not Specified Elsewhere: Shop prefabricate in as large sections as practicable and in strict accordance with the approved Shop Drawings.
   1. Construct stairs to conform to sizes and arrangements as shown. Design and construct assembly to support minimum live load of 100 pounds per square foot. Provide steel grating, metal pans, angles, clips, brackets, anchorage, abrasive nosings, and other accessories as required to complete each type of steel stair work shown.
   2. Provide stairs with stringers of structural steel channels and platforms of channel headers and miscellaneous framing members as shown and as required.
   3. Steel grating for stair treads: Bearing bars, cross bars and spacing sizes shall be in accordance with manufacturer's printed recommendations.
      a. Exterior treads: Galvanized.
      b. Interior treads: Not galvanized.
   4. Bolt or weld headers to stringers. Bolt or weld framing members to stringers and headers.
   5. Form exposed work true to line and level with accurate angles and surfaces, and straight sharp edges. Ease exposed edges to a radius of approximately 1/32 inch. Form bent-metal corners to smallest radius possible without causing grain separation or otherwise impairing work.
   6. Weld corners and seams continuously in accordance with recommendations of AWS. Grind exposed welds smooth and flush, to match and blend with adjoining surfaces.

B. Handrails and Guardrails Not Specified Elsewhere: As detailed on drawings.
   1. Pipe sizes noted on the Drawings are nominal diameter in inches.
   2. Fabricate steel handrails with welded joints ground smooth.
   3. All changes in direction of pipe handrails shall be made with smooth radius turns.
   4. Provide pipe sleeves of the sizes and where indicated on the Drawings.
   5. All handrails, guards on stairs and raised platforms shall comply with the provisions of the local building code and OSHA.

C. Bumper Posts and Guard Rails: As detailed; prime paint finish.

D. Bollards: Steel pipe, concrete filled, crowned cap, as detailed; prime paint finish.

E. Ledge Angles, Shelf Angles, Channels, and Plates Not Attached to Structural Framing: For support of metal decking; prime paint finish.

F. Lintels: As detailed; prime paint finish.

G. Anchor Bolts: Provide to the lengths and details shown on the Drawings. All anchor bolts shall be furnished with one washer and one heavy hex nut or two heavy hex nuts where grout will be placed under column base plates.

H. Door Frames for Overhead Door Openings and Wall Openings: Channel sections; prime paint finish.

I. Toilet Partition Suspension Members: Steel channel sections; prime paint finish.

2.4 FINISHES - STEEL

A. Prime paint all steel items.
   1. Exceptions: Galvanize items to be embedded in concrete or masonry.
   2. Exceptions: Do not prime surfaces in direct contact with concrete, where field welding is required, and items to be covered with sprayed fireproofing.

B. Clean surfaces of rust, scale, grease, and foreign matter prior to finishing.

C. Prime Painting: One coat.

D. Galvanizing of Structural Steel Members: Galvanize after fabrication to ASTM A 123/A 123M requirements.

E. Galvanizing of Non-structural Items: Galvanize after fabrication to ASTM A 123/A 123M requirements.

2.5 FABRICATION TOLERANCES

A. Squareness: 1/8 inch maximum difference in diagonal measurements.

B. Maximum Offset Between Faces: 1/16 inch.

C. Maximum Misalignment of Adjacent Members: 1/16 inch.

D. Maximum Bow: 1/8 inch in 48 inches.

E. Maximum Deviation From Plane: 1/16 inch in 48 inches.

PART 3 - EXECUTION

3.1 EXAMINATION

A. Verify that field conditions are acceptable and are ready to receive work.

3.2 PREPARATION

A. Clean and strip primed steel items to bare metal where site welding is required.

B. Supply setting templates to the appropriate entities for steel items required to be cast into concrete or embedded in masonry.

3.3 INSTALLATION

A. Install items plumb and level, accurately fitted, free from distortion or defects.

B. Provide for erection loads, and for sufficient temporary bracing to maintain true alignment until completion of erection and installation of permanent attachments.

C. Field weld components indicated on drawings.

D. Perform field welding in accordance with AWS D1.1.

E. Obtain approval prior to site cutting or making adjustments not scheduled.

F. After erection, prime welds, abrasions, and surfaces not shop primed or galvanized, except surfaces to be in contact with concrete.

3.4 ERECTION TOLERANCES

A. Maximum Variation From Plumb: 1/4 inch per story, non-cumulative.

B. Maximum Offset From True Alignment: 1/4 inch.

C. Maximum Out-of-Position: 1/4 inch.

END OF SECTION 05 50 50

SECTION 05 51 00 - CONCRETE PAN-FILLED METAL STAIRS

PART 1 - GENERAL

1.1 SUMMARY

A. Section Includes:

1. Metal stairs, concrete pan-filled.
2. Metal Handrails and railings attached to metal stairs.
3. Handrails attached to walls adjacent to metal stairs.

B. Related Sections:

1. Section 03 30 00 - Cast-in-Place Concrete

1.2 REFERENCES

A. ASTM A 36/A 36M-14: Specification for Carbon Structural Steel

B. ASTM A 53: Specification for Pipe, Steel, Black and Hot-Dipped, Zinc-Coated, Welded and Seamless

C. ASTM A 123: Specification for Zinc (Hot-Dip Galvanized) Coatings on Iron and Steel Products

D. ASTM A 153/A 153M-16A: Specification for Zinc Coating (Hot-Dip) on Iron and Steel Hardware

E. ASTM E-303: Non-slip surface test.

F. ASTM A 500: Specification for Cold-Formed Welded and Seamless Carbon Steel Structural Tubing in Rounds and Shapes

G. ASTM A 563: Specification for Carbon and Alloy Steel Nuts

H. ASTM A 1011-A: Specification for Steel, Carbon (0.15 Maximum, Percent), Hot-Rolled Sheet and Strip, Commercial Quality

I. ASTM A 653/A 653M-17: Specification for Steel Sheet, Zinc-Coated (Galvanized) or Zinc-Iron Alloy-Coated Galvannealed by the Hot-Dip Process

J. ASTM A 786/A 786M: Specification for Rolled Steel Floor Plates

K. ASTM B 633: Specification for Electrodeposited Coatings of Zinc on Iron and Steel

L. ASTM C 1107: Specification for Packaged Dry, Hydraulic-Cement Grout (Non-shrink)

M. ASTM E 488: Test Method for Strength of Anchors in Concrete and Masonry Elements

N. ASTM E 894: Test Method for Anchorage of Permanent Metal Railing Systems and Rails for Buildings

O. ASTM E 935: Test Methods for Performance of Permanent Metal Railing Systems and Rails for Buildings

P. ASTM E 985: Specification for Permanent Metal Railing Systems and Rails for Buildings

Q. AWS D1.1: Structural Welding Code--Steel

R. AWS D1.3: Structural Welding Code--Sheet Steel

S. ASTM A307: Standard Specification for Carbon Steel Bolts

1.3 PERFORMANCE REQUIREMENTS

A. Stair provider shall engineer and fabricate stairs and railings to comply with requirements of the following, when installed:
   1. Structural Performance: Provide metal stairs and railings capable of withstanding the following structural loads without exceeding the allowable design working stress of the materials involved, including anchors and connections.
      a. Treads and Platforms:
         1) Uniform load of 100 lbf/sq. ft.
         2) Concentrated load of 300 lbf on an area of 4 sq. in.
      b. Stair Framing:
         1) Tread and platform loads
         2) Railing system loads.
         3) Limit deflection of stair members to L/240.
      c. Top Rail:
         1) Concentrated load of 200 lbf applied at any point and in any direction.
         2) Uniform load of 50 lbf/ft. applied horizontally and concurrently with uniform load of 50 lbf/ft applied vertically downward.
      d. Handrails:
         1) Concentrated load of 200 lbf applied at any point and in any direction.
         2) Uniform load of 50 lbf/ft. applied horizontally and concurrently with uniform load of 50 lbf/ft. applied vertically downward.
      e. Components: Intermediate Railing, balusters, panel fillers:
         1) Uniform load of 50 lbf/sq. ft.
         2) Concentrated load of 300 lbf on an area of 1 sq.foot.

1.4 SUBMITTALS

A. Product Data: Submit stair fabricator's product data substantiating compliance with drawings and specifications.

B. Shop Drawings: Submit shop drawings for stairs and railings. Include plans, elevations and details. Show connection and accessory items, indicate field welds. Show locations for anchor and bolt installation.
   1. Include design loads, structural calculations and material properties. Shop drawings shall be signed and sealed by a Structural Professional Engineer licensed in the State of New York.

C. Samples: Submit samples for the following products.
   1. Stair treads.
   2. Stair nosings.

1.5 QUALITY ASSURANCE `

A. Fabricator Qualifications: Fabricator shall have produced the types of stair and railing systems required for not less than ten (10) years, with not less than five (5) similar projects that have been in successful use for not less then five (5) years.

B. Installer Qualifications: Minimum five (5) years experience in the successful installation of steel stair and railing systems of the type indicated for this project.

C. Furnish test results that stair tread meets acceptable flame and smoke levels.

D. Applicable Standards:

1. NAAMM Stair Standard: "Recommended Voluntary Minimum Standards for Fixed Metal Stairs" in NAAMM AMP 510, "Metal Stairs Manual," service or commercial class.
2. AWS D1.1 “Structural Welding Code - Steel”, AWS D1.3 “Structural Welding Code – Sheet Steel” and AWS “Welding Procedure and Performance Qualification”.
3. NOMMA “Guideline 1 - Joint Finishes”.

1.6 WARRANTY

A. Provide manufacturer’s written warranty that its standard products are free from defects in material and workmanship for the life of the building and agreeing to repair or replace items, proven to be defective, or refund the purchase price of the item.

PART 2 - PRODUCTS

2.1 MANUFACTURERS

A. Design is based on custom designed stairs; at contractor’s option, pre-engineered, prefabricated stairs may be used, provided essential dimensions are maintained, applicable codes are complied with, and performance requirements are met.
1. Acceptable Manufacturers include:
a. American Stair Corporation; www.americanstair.com
b. Pacific Stair Corporation; www.pacificstair.com
c. Breuer Metal Craftsmen; www.breuermetal.com

B. Substitutions: Other manufacturers wishing consideration of their products, shall submit information to the Architect not less than ten (10) business days prior to the bid due date. Comply with requirements of Section 01 60 00 Product Requirements.

2.2 MATERIALS

A. Steel:
1. Sections, Plates, Shapes, and Bars: ASTM A36/A36M.
2. Structural steel sheet: Hot-rolled, ASTM A1011, or cold-rolled, ASTM A1008/A1008M, Class 1.
3. Pipe: ASTM A53/A53M, Type S, minimum Standard Weight, Schedule 40.
4. Tube: Cold-rolled, ASTM A500, or hot-rolled, ASTM A501, Grade B, seamless where exposed
5. Sheet: ASTM A1008/A1008M.

B. Concrete: ASTM C94; minimum 3000 PSI compressive strength at 28 days.

C. Welding Rods and Bare Electrodes: Select according to AWS specifications for metal alloy welded.

D. Primer: Shall be manufacturers fast-curing, lead and chromate-free, universal water reducible primer complying with performance requirements for FS TT-P-664.

2.3 FASTENERS

A. Provide zinc-plated fasteners with coating complying with ASTM B 633, Class Fe/Zn 25 for exterior use, and Class Fe/Zn 5 for other applications. Provide fastener type, grade, and class required and recommended by stair fabricator.

2.4 FABRICATION

A. Exposed Work: True to line and level with accurate angles and surfaces and with straight sharp edges. Use only smooth materials free from burrs, pitting and other marks.

B. Fastener Connections: provide flush close-fit joints at exposed connections.

C. Welded Connections: Exposed welds to have finished appearance in accordance with NOMMA "Guideline 1 - Joint Finishes" for Finish #3.

D. Provide complete stair and landing systems including stringers, landing framing, treads, landings, connections and other components necessary for the support and installation of stairs and landings.

E. Comply with NAAMM "Metal Stairs Manual" requirements for the following Class:
   1. Commercial Class Stairs.
   2. Architectural Class Stairs.

F. Stringers: Steel plates, tubing, channels as required for compliance with performance requirements.
   1, Note: Stringers at Stair #6 shall be tubes where ornamental glass railing is used.

G. Treads:
   1. Metal Pan for Cast-in-Place Concrete: Sheet steel tread pan formed for concrete fill, factory-welded to stringers, with all welds on inside of pan to be concealed by field-poured concrete fill.
      a. Concrete Fill: Cast in place concrete with not less than 3000psi compressive strength. Refer to Section 03 30 00 for concrete fill and reinforcing.

H. Nosing: Furnished by others. Refer to interior finish schedule.

I. Risers: Sheet steel.

J. Landings: Provide 4" toe plates at open edges of landings. Provide landing type as follows:
   1. Metal Pan for Cast-in-Place Concrete: Sheet steel decking pan and factory-installed steel reinforcing bars for field-poured concrete fill; steel channel supports.
      a. Concrete Fill: Cast in place concrete with not less than 3000psi compressive strength. Refer to Section 03 30 00 for concrete fill and reinforcing.

K. Stair Unit Connections: Provide angle brackets, expansion anchors, weld plates and other connection devices as recommended by stair manufacturer for substrates indicated.

2.5 RAILINGS AND HANDRAILS

A. General: Maintain uniform curvature and cylindrical cross-section at each bend.

B. Stringer-Mounted Guardrails with Handrails: Welded steel pipe with woven wire mesh fabric, 2 inch square pattern (vertical, not sloped) as shown on Drawings. Handrail Design: 1-1/2” round tubular railing, continuously curved at landings.

C. Wall-Mounted Handrails: 1-1/2” round tubular rail with wall returns, with 1/4” stamped plate wall brackets for exposed fastener; with horizontal extensions at top and sloping extensions at bottom of length required by code.
   1. Tube Profile: Round.

D. Prime paint components.

2.6 FINISHING

A. Prepare surfaces to be primed in accordance with SSPC-SP 2.

B. Clean surfaces of rust, scale, grease, and foreign matter prior to finishing.

C. Do not prime surfaces in direct contact with concrete or where field welding is required.

D. Prime paint items with one coat.

PART 3 - EXECUTION

3.1 EXAMINATION

A. Installer is responsible to examine conditions, under which metal stairs will be installed for compliance with manufacturer’s installation requirements.

3.2 INSTALLATION

A. Install stairs and railings in accordance with manufacturer’s instructions and approved drawings and to comply with specified performance requirements when installed.

B. Fit exposed connections accurately together to form close fit joints. Provide anchorage devices and fasteners for securing stairs and railings to in-place construction.

C. Weld connections which cannot be shop welded because of shipping size limitations. Grind exposed joints smooth and touch-up shop paint coat. Clean field welds, bolted connections and abraded areas and prime with same material used for shop priming.

D. Galvanized Surfaces: Clean field welds, bolted connections, and abraded areas and repair galvanizing to comply with ASTM A 780.

3.3 TOUCH UP

A. Touchup Painting: Cleaning and touchup painting of field welds, bolted connections, and abraded areas of shop paint are specified in Division 9 Section "Painting."

B. Galvanized Surfaces: Clean field welds, bolted connections, and abraded areas and repair galvanizing to comply with ASTM A 780.

END OF SECTION 05 51 00

SECTION 05 51 33 – ALUMINUM LADDERS

PART 1 - GENERAL

1.1 SECTION INCLUDES

A. Aluminum roof access ladder with safety post.

1.2 RELATED SECTIONS

A. Section 05 50 00 – Metal Fabrications: Fasteners and installation requirements used to attach ladders to structure.

B. Section 14 24 00 – Elevators: For pit ladders.

1.3 REFERENCES

A. AA – Aluminum Association.

B. ASTM B 209 - Standard Specification for Aluminum and Aluminum-Alloy Sheet and Plate.

C. ASTM B 221 - Standard Specification for Aluminum and Aluminum-Alloy Extruded Bars, Rods, Wire, Profiles, and Tubes.

D. OSHA 1910.27 – Fixed Ladders.

1.4 SUBMITTALS

A. Submit under provisions of Section 01 33 00.

B. Product Data: Manufacturer's data sheets on each product.

C. Shop Drawings:
   1. Detail fabrication and erection of each ladder indicated. Include plans, elevations, sections, and details of metal fabrications and their connections.
   2. Provide templates for anchors and bolts specified for installation under other Sections.
   3. Provide reaction loads for each hanger and bracket.

D. Qualification Data:
   1. Refer to Quality Assurance provisions for submittal requirements evidencing experience, certifications and resources.

1.5 QUALITY ASSURANCE

A. Manufacturer Qualifications: A firm experienced in producing aluminum metal ladders similar to those indicated for this Project.
    1. Record of successful in-service performance.
    2. Sufficient production capacity to produce required units.
    3. Professional engineering competent in design and structural analysis to fabricate ladders in compliance with industry standards and local codes.

B. Installer Qualifications: Competent and experienced firm capable of selecting fasteners and installing ladders to attain designed operational and structural performance.

C. Product Qualification: Product design shall comply with OSHA 1910.27 minimum standards for ladders.

1.6 DELIVERY, STORAGE, AND HANDLING

A. Store products in manufacturer's unopened packaging until ready for installation.

1.7 PROJECT CONDITIONS

A. Field Measurements: Verify dimensions by field measurement before fabrication.
    1. Established Dimensions: Where field measurements cannot be made without delaying the Work, indicate established dimensions on shop drawing submittal and proceed with fabrication.

1.8 WARRANTY

A. Manufacturer has responsibility for an extended Corrective Period for work of this Section for a period of 5 years commencing on the shipment date of the product against all the conditions indicated below, and when notified in writing from Owner, manufacturer shall promptly and without inconvenience and cost to Owner correct said deficiencies.
    1. Defects in materials and workmanship.
    2. Deterioration of material and surface performance below minimum OSHA standards as certified by independent third party testing laboratory. Ordinary wear and tear, unusual abuse or neglect excepted.
    3. Within the warranty period, the manufacturer shall, at its option, repair, replace, or refund the purchase price of defective ladder.

PART 2 - PRODUCTS

2.1 MANUFACTURERS

A. Acceptable Manufacturer: O'Keeffe's, Inc.; 100 N Hill Drive, Suite 12, Brisbane, CA 94005. Toll Free Tel: (888) 653-3333. Tel: (415) 824-4900. Fax: (415) 824-5900. Email: info@okeeffes.com. Web: http://www.okeeffes.com.

B. Requests for substitutions will be considered in accordance with provisions of Section 01 60 00.

2.2 APPLICATIONS/SCOPE

A. Fixed Access Ladder:
    1. Heavy Duty Tubular Rail.
        a. Model 501 as manufactured by O'Keeffe's Inc.

2.3 FINISHES

A. Paint. Urethane over chemically pretreated substrate.
    1. Caution Yellow (RAL 1018).

2.4 MATERIALS

A. Aluminum Sheet: Alloy 5005-H34 to comply with ASTM B209.

B. Aluminum Extrusions: Alloy 6063-T6 to comply with ASTM B221.

2.5 FABRICATION

A. Rungs: Not less than 1-1/4 inches (32 mm) in section and 18–3/8 inches (467mm) long, formed from tubular aluminum extrusions. Squared and deeply serrated on all sides.
    1. Rungs shall withstand a 1,500 pound (454 kg) load without deformation or failure.

B. Heavy Duty Tubular Side Rails: Assembled from two interlocking aluminum extrusions no less than 1/8 inch (3 mm) wall thickness by 3 inches (76 mm) wide. Construction shall be self-locking stainless steel fasteners, full penetration TIG welds and clean, smooth and burr-free surfaces.

C. Ladder Safety Post: Retractable hand hold and tie off.

PART 3 - EXECUTION

3.1 EXAMINATION

A. Coordinate anchorages. Furnish setting drawings, templates, and anchorage structural loads for fastener resistance.

B. Do not begin installation until supporting structure is complete and ladder installation will not interfere with supporting structure work.

C. If supporting structure is the responsibility of another installer, notify Architect of unsatisfactory supporting work before proceeding.

3.2 INSTALLATION

A. Install in accordance with manufacturer's instructions and in proper relationship with adjacent construction.

3.3 PROTECTION

A. Protect installed products until completion of project.

B. Touch-up, repair or replace damaged products before Substantial Completion.

END OF SECTION 05 51 33

SECTION 06 10 00 – ROUGH CARPENTRY

PART 1 – GENERAL

1.1 SECTION INCLUDES

A. Blocking in walls.

B. Fire retardant treatment of wood.

C. Telephone and electrical panel boards.

D. Concealed wood blocking for support of wall cabinets and handrails.

1.2 RELATED SECTIONS

A. Section 07 54 23 – TPO Membrane Roofing: Wood blocking in roof.

1.3 REFERENCES

A. ASTM A 153/A 153M - Standard Specification for Zinc Coating (Hot-Dip) on Iron and Steel Hardware.

B. ASTM D 2898 - Standard Test Methods for Accelerated Weathering of Fire-Retardant-Treated Wood for Fire Testing.

C. ASTM E 84 - Standard Test Method for Surface Burning Characteristics of Building Materials.

D. AWPA C20 - Structural Lumber -- Fire Retardant Treatment by Pressure Processes; American Wood-Preservers' Association.

E. AWPA C27 - Plywood -- Fire-Retardant Treatment by Pressure Processes; American Wood-Preservers' Association.

F. AWPA U1 - Use Category System: User Specification for Treated Wood; American Wood-Preservers' Association.

G. PS 1 - Construction and Industrial Plywood; National Institute of Standards and Technology (Department of Commerce).

H. PS 20 - American Softwood Lumber Standard; National Institute of Standards and Technology (Department of Commerce).

I. RIS (GR) - Standard Specifications for Grades of California Redwood Lumber; Redwood Inspection Service.

J. SPIB (GR) - Grading Rules; Southern Pine Inspection Bureau, Inc..

K. WCLB (GR) - Standard Grading Rules for West Coast Lumber No. 17; West Coast Lumber Inspection Bureau.

L. WWPA G-5 - Western Lumber Grading Rules; Western Wood Products Association.

1.4 QUALITY ASSURANCE

A. Lumber: Comply with PS 20 and approved grading rules and inspection agencies.
   1. Acceptable Lumber Inspection Agencies: RIS, SPIB, WCLB, and WWPA.
   2. Lumber of other species or grades, or graded by other agencies, is acceptable provided structural and appearance characteristics are equivalent to or better than products specified.

B. Plywood: Comply with PS 1.

PART 2 – PRODUCTS

2.1 GENERAL REQUIREMENTS

A. Lumber fabricated from old growth timber is not permitted.

2.2 DIMENSION LUMBER

A. Sizes: Nominal sizes as indicated on drawings, S4S.

B. Moisture Content: S-dry or MC19.

C. Miscellaneous Blocking, Furring, and Nailers:
   1. Lumber: S4S, No. 2 or Standard Grade.

2.3 CONSTRUCTION PANELS

A. Miscellaneous Panels:
   1. Electrical Component Mounting: APA rated sheathing, fire retardant treated, MC15.

2.4 ACCESSORIES

A. Fasteners and Anchors:
   1. Fasteners: Hot-dipped galvanized steel per ASTM A 153/A 153M for high humidity and treated wood locations, unfinished steel elsewhere.
   2. Anchors: Toggle bolt type for anchorage to hollow masonry.

2.5 FACTORY WOOD TREATMENT

A. Treated Lumber and Plywood: Comply with requirements of AWPA U1 - Use Category System for wood treatments determined by use categories, expected service conditions, and specific applications.

B. Fire Retardant Treatment, Exterior Type: AWPA Use Category UCFB, Commodity Specification H (Treatment C20 for lumber and C27 for plywood), chemically treated and pressure impregnated, maximum flame spread rating of 25 when tested in accordance with ASTM E 84 and with no evidence of significant combustion when test is extended for an additional 20 minutes both before and after accelerated weathering test performed in accordance with ASTM D 2898; kiln dried after treatment to maximum moisture content of 19 percent for lumber and 15 percent for plywood.

C. Fire Retardant Treatment, Interior Type A: AWPA Use Category UCFA, Commodity Specification H (Treatment C20 for lumber and C27 for plywood), low temperature (low hygroscopic) type, chemically treated and pressure impregnated, maximum flame spread rating of 25 when tested in accordance with ASTM E 84 and with no evidence of significant combustion when test is extended for an additional 20 minutes; kiln dried after treatment to maximum moisture content of 19 percent for lumber and 15 percent for plywood.

PART 3 - EXECUTION

3.1 FRAMING INSTALLATION

A. Set members level and plumb, in correct position.

3.2 INSTALLATION OF CONSTRUCTION PANELS

A. Install telephone and electrical panel back boards made of plywood or other acceptable structural panels at locations indicated. Size back boards to be minimum 48 inches beyond size of telephone and electrical panels.

3.3 SCHEDULES

A. Wall Blocking, Furring and Nailers: S/P/F species, 19 percent maximum moisture content, fire retardant treated.

B. Telephone and Electrical Panel Boards: 3/4 inch thick, plywood or particleboard, fire retardant treated.

END OF SECTION 06 10 00

FINISH CARPENTRY AND ARCHITECTURAL MILLWORK

PART 1 - GENERAL

1.1 SCOPE OF WORK

A. Under this Section of the Specifications the Contractor shall furnish all labor, materials, millwork, tools, and equipment necessary to fully complete the finish carpentry, millwork, and miscellaneous work in accordance with the Drawings and Specifications.

B. This work includes, but is not necessarily limited to, the following items:

1. Trim and moldings.
2. Solid wood base.
3. Storage shelving.

1.2 GENERAL REQUIREMENTS

A. The Contractor shall provide the services of competent craftsmen to perform all work related to this Section.

1.3 RELATED WORK SPECIFIED ELSEWHERE

A. Rough Carpentry – See Section 06 10 00.

B. Plastic-Laminate-Clad Architectural Cabinets and Shelving – See Section 06 41 16.

C. Non-Loadbearing Interior Framing – See Section 09 29 00.

1.4 SUBMITTALS

A. Shop Drawings:

1. The Contractor shall prepare detailed Shop Drawings for all work. These Shop Drawings shall include location, construction details, lumber types, finishes, etc.

2. Shop Drawings shall be submitted in accordance with Section 01 33 00. Fabrication and construction shall not commence until the Shop Drawings have been approved.

B. Samples:

1. Submit samples of trim, moldings and base, and any other items to be factory finished.

1.5 REGULATORY REQUIREMENTS

A. Conform to local building codes for flame spread ratings.

1.6 QUALITY ASSURANCE

A. The "Quality Standards" of the Architectural Woodwork Institute (AWI), latest edition, shall apply and by reference are hereby made a part of this Specification. Any reference to Premium, Custom, or Economy in this specification shall be as defined in the latest edition of the AWI "Quality Standards."

B. Any item not given a specific quality grade shall be Custom grade as defined in the latest edition of the AWI "Quality Standards."

C. All lumber shall be identified with a grade stamp of an agency certified by the National Forest Products Association.

1.7 PRODUCT HANDLING

A. All lumber and plywood materials when delivered to the site shall be stored to insure proper drainage and ventilation to prevent absorption of moisture and shall be protected from damage by weather.

PART 2 - PRODUCTS

2.1 LUMBER AND SHEET MATERIALS

A. General: Lumber shall have a maximum moisture content of 8 percent for interior work.

B. Lumber:
1. Softwood Lumber - PS 20 Custom Grade.
2. Hardwood Lumber - PS 58 Custom Grade Birch.
3. Softwood Plywood - PS 1 Custom Grade Fir.
4. Hardwood Plywood - PS 54 Custom Grade Birch.

C. Standing and Running Trim: Wood trim shall be select, clear, kiln dried poplar free from shakes, sap, and other imperfections. Trim shall be suitable for staining.

D. Solid Wood Base: Solid wood base shall be as indicated in Section 09 00 00 Interior Color and Material Specification for WB-1, and where located on Color and Material drawings. Provide mitered corners and returns at all outside exposed corners.

2.2 PLASTIC LAMINATE

A. Plastic laminates shall be as specified in Section 09 00 00 Interior Color and Material Specifications.

B. Plastic-laminate-clad cabinets and shelving shall be as specified in Section 06 41 16 Plastic-Laminate-Clad Architectural Cabinets.

2.3 CASEWORK HARDWARE

A. Shelf standards and brackets: As noted on drawings.

B. Cabinet Hardware: As noted on drawings.

2.5 ACCESSORIES

A. Nails shall be of type and size to suit application.

B. Bolts, nuts, washers, screws of type to suit application and be of plain finish.

C. Fillers for nail holes shall be stainable wood filler of type appropriate for the application.

PART 3 - EXECUTION

3.1 GENERAL

A. The installation of finished carpentry shall be in accordance with the AWI Standards, custom grade in the locations shown on the Drawings and specified herein, using the best methods of craftsmanship to produce a first class installation in every respect.

B. All items shall be firmly attached to walls, floors, and other substrates.

C. Set items to levels indicated on the Drawings, plumb and square in every respect, with no open joints between woodwork and adjacent materials.

3.2 TRIM, MOLDINGS, AND BASE

A. All wood trim, moldings, and base shall be securely fastened and nailed to provide a first-class job. All work shall be sanded and nail holes filled with matching filler.

3.6 SHELVING

A. Storage room shelving shall be constructed of 3/4 inch by 16 inch as noted on drawings, birch plywood with 1 1/2 inch nosings and shall receive a plastic laminate finish. Shelving length to be determined from field dimensions.

B. Shelving brackets shall be installed true and plumb at 32 inches o.c. maximum with #10 flat head wood screws by 2 inch lg. screwed directly to studs or blocking. Attach to concrete block using metal expansion shield.

3.7 CLEANUP

A. During construction the job site shall be kept clean from all debris and surplus materials resulting from the finish carpentry.

B. Upon completion of the Work, all surplus materials, debris, tools, and equipment shall be removed from the site.

C. All finish carpentry work shall be protected from damage and stain and shall be left in perfect and clean condition, ready for finishing.

END OF SECTION 06 20 00

SECTION 06 41 16 – PLASTIC-LAMINATE-CLAD ARCHITECTURAL CABINETS

PART 1 – GENERAL

1.1 SECTION INCLUDES

A. Decorative Plastic Laminate and Melamine Laminate fabrications:
   1. Plastic laminate cabinet units and components
   2. Plastic laminate shelving.

B. Cabinet hardware.

C. Wood furring, blocking, shims and hanging strips for installing plastic-laminate-clad architectural cabinets unless concealed within other construction before cabinet installation.

1.2 RELATED SECTIONS

A. Section 06 10 00 – Rough Carpentry.

B. Section 09 00 00 – Color and Material Specification.

C. Section 12 36 23 – Plastic-Laminate Clad Countertops.

D. Section 12 36 61 – Quartz Surfacing Countertops

E. Section 12 36 63 – Solid Surfacing Countertops.

1.3 REFERENCES

A. ANSI A135.4 - American National Standard for Basic Hardboard; latest edition.

B. ANSI A208.1 - American National Standard for Particleboard; latest edition.

C. ANSI A208.2 - American National Standard for Medium Density Fiberboard for Interior Use; latest edition.

D. Architectural Woodwork Institute / Woodwork Institute (AWI/WI) - Architectural Woodwork Standards; latest edition.

E. American National Standards Institute / Builders Hardware Manufacturers Association (ANSI/BHMA)
   1. ANSI/BHMA A156.9 - Cabinet Hardware; latest edition.
   2. ANSI/BHMA A156.11 - Cabinet Locks; latest edition.

F. NEMA LD 3 - High-Pressure Decorative Laminates; National Electrical Manufacturers Association; latest edition.

G. WI (MAN) - Manual of Millwork; Woodwork Institute; latest edition.

H. SPIB (GR) – Grading Rules; Southern Pine Inspection Bureau; latest edition.

1.4 SUBMITTALS

A. Submit under provisions of Section 01 33 00 - Submittals.

B. Product Data:

1. For each type of product, including panel products, high pressure decorative laminate, and cabinet hardware and accessories.
2. Include data for fire-retardant treatment from chemical treatment manufacturer and certification from treatment plant that treated materials comply with requirements.

C. Shop Drawings:

1. Show details full size.

2. Show locations and sizes of furring, blocking and hanging strips, including concealed blocking and reinforcement specified in other Sections.

3. Show locations and sizes of cutouts and holes for plumbing and electrical fixtures and devices, and other items installed in plastic-laminate-clad architectural cabinets.

D. Samples:
1 Laminated panels, including laminated edges, 12”x12” min.; 2 of each type.
2 Pulls, hinges, drawer slides, shelf pins; 2 of each type.
3 Other exposed hardware; 2 of each type.

1.5 QUALITY ASSURANCE

A. Perform all work and manufacture all products in accordance with AWI Architectural Woodwork Standards, Custom quality, unless other quality is indicated for specific items.

B. Manufacturer Qualifications: Company specializing in manufacturing the products specified in this section with minimum 5 years of experience.

1.6 DELIVERY, STORAGE, AND HANDLING

A. Protect units from moisture damage.

B. Do not deliver cabinets until painting and similar operations that could damage woodwork have been completed in installation areas. If cabinets must be stored in other than installation areas, store only in areas where environmental conditions match those required by this Article.

C. Environmental Limitations: Do not deliver or install cabinets until building is enclosed, wet work is complete, and HVAC system is operating and maintaining temperature between 60 and 86 deg. F and relative humidity between 25 and 55 percent during the remainder of the construction period.

1.7 PROJECT CONDITIONS

A. Field Measurements:

1. Where cabinets are indicated to fit to other construction, verify dimensions of other construction by field measurements before fabrication, and indicate measurements on shop drawings.
2. Coordinate fabrication schedule with construction progress to avoid delaying the work.
3. Locate concealed framing, blocking, and reinforcements that support cabinets by field measurements before being enclosed, and indicate measurements on shop drawings.

PART 2 – PRODUCTS

2.1 PANEL MATERIALS

A. All architectural casework, laminate clad, shall comply with the quality standards of the Architectural Woodwork Institute (AWI) for Premium Grade.

B. Medium Density Fiberboard (MDF): ANSI A208.2; type as specified in AWI Architectural Woodwork Standards; composed of wood fibers pressure bonded with moisture resistant adhesive to suit application; sanded faces; thickness as required.

C. All panel material must be Formaldehyde Free.

2.2 LAMINATE MATERIALS

A. Decorative Plastic Laminate and Melamine Laminate:

1. All plastic laminate materials shall be as indicated under “Laminate” in Section 09 00 00 Interior Color and Material Specification, and where indicated on Millwork Elevation and Detail Drawings.

2. The same plastic laminate for the exterior shall be used on the exposed interior surfaces. Colored melamine will be accepted on semi-exposed interior surfaces. No substitutions from AWI standards will be accepted.

2.3 WOOD MATERIALS

A. Dimension softwood frame components in sizes indicated on drawings or as required.

B. Moisture content: 5%-10%.

2.4 CABINET HARDWARE AND ACCESSORIES

A. Refer to Millwork Hardware & Accessory Schedule on drawings.

B. Items not specified on drawings shall be casework manufacturer's best hardware subject to approval by architect. Unless otherwise indicated, cabinet doors and drawers shall be self-closing with concealed type hardware; cabinet shelves shall be adjustable. All cabinets & drawers shall have rubber silencers.

C. All upper and/or lower cabinets to have locks as indicated on elevations. Each to be keyed alike. Finish: stainless steel or aluminum. Exact locations to be determined.

2.5 CLEATS, BLOCKING AND MISCELLANEOUS COMPONENTS

A. Laminate adhesive: Contact adhesive as recommended by laminate manufacturer and compatible with the specified substrate and service conditions.

B. Wood adhesive: as recommended by AWI for the materials being joined and service conditions.

C. Fasteners: as recommended by AWI or, if recommendation not provided, size and type to suit application.
   1. Galvanized or chrome-plated steel in concealed locations.
   2. Stainless steel or chrome-plated steel in exposed locations.
   3. Furring, blocking, shims and hanging strips: softwood or hardwood lumber, kiln dried.
   4. Anchors: select material, type, size and finish required for each substrate for secure anchorage. Provide metal expansion sleeves or expansion bolts for post-installed anchors. Use non-ferrous metal or hot dip galvanized anchors and inserts at inside face of exterior walls and at floors.

D. Concealed Joint Fasteners: Threaded steel.

2.6 PLASTIC-LAMINATE-CLAD ARCHITECTURAL CABINET FABRICATION

A. Cabinet quality standard: Unless otherwise indicated, comply with the "Architectural Woodwork Standards" for Premium Grade of architectural plastic-laminate cabinets for construction, finishes, installation, and other requirements.

B. Individual component quality standards: as specified in the relevant Article for those components.

C. Cabinet doors and drawer fronts: 3/4 inch thick unless noted otherwise; flush overlay.

D. Complete fabrication, including assembly and hardware application, to maximum extent possible before shipment to Project site. Disassemble components only as necessary for shipment and installation. Where necessary for fitting at site, provide ample allowance for scribing, trimming, and fitting.
   1. Trial fit assemblies at fabrication shop that cannot be shipped completely assembled. Install dowels, screws, bolted connectors, and other fastening devices that can be removed after trial fitting. Verify that various parts fit as intended and check measurements of assemblies against field measurements before disassembling for shipment.

E. Edging: Fit shelves, doors, and exposed edges with plastic laminate edging. Do not use more than one piece for any single length.

F. Fitting: When necessary to cut and fit on site, provide materials with ample allowance for cutting. Provide matching trim for scribing and site cutting.

G. Plastic Laminate: Apply plastic laminate finish in full uninterrupted sheets consistent with manufactured sizes. Fit corners and joints hairline; secure with concealed fasteners.

H. Shop-cut openings to maximum extent possible to receive plumbing fixtures, hardware, appliances, electrical work, and similar items. Locate openings accurately and use templates or roughing-in diagrams to produce accurately sized and shaped openings. Sand edges of cutouts to remove splinters and burrs.

I. Drawer Construction: Fabricate with exposed fronts fastened to subfront with mounting screws from interior of body. Join subfronts, backs, and sides with glued rabbeted joints supplemented by mechanical fasteners.

J. Fabricate cabinets to dimensions, profiles, and details indicated.

PART 3 - EXECUTION

3.1 PREPARATION

A. Before installation, condition cabinets to average prevailing humidity conditions in installation areas.

B. Before installing cabinets, examine shop-fabricated work for completion and complete work as required.

C. Verify adequacy of backing and support framing.

D. Commencement of work will constitute acceptance of substrates and conditions to receive the work.

3.2 INSTALLATION

A. Assemble cabinets and complete fabrication at Project site to the extent that it was not completed in the shop.

B. Install cabinets level, plumb, true, and straight. Shim as required with concealed shims. Install level and plumb to a tolerance of 1/8 inch in 96 inches.

C. Scribe and cut cabinets to fit adjoining work, refinish cut surfaces, and repair damaged finish at cuts.

D. Anchor cabinets to anchors or blocking built in or directly attached to substrates. Secure with countersunk, concealed fasteners and blind nailing.

E. Cabinets: Install without distortion so doors and drawers fit openings properly and are accurately aligned. Adjust hardware to center doors and drawers in openings and to provide unencumbered operation. Complete installation of hardware and accessory items as indicated.

F. Install cabinets with no more than 1/8 inch in 96-inch sag, bow, or other variation from a straight line.

G. Fasten wall cabinets through back, near top and bottom, and at ends not more than 16 inches o.c. with No. 10 wafer-head screws sized for not less than 1-1/2-inch penetration into wood framing, blocking, or hanging strips, or No. 10 wafer-head sheet metal screws through metal backing or metal framing behind wall finish.

3.3 ADJUSTING AND CLEANING

A. Repair damaged and defective cabinets, where possible, to eliminate functional and visual defects; where not possible to repair, replace woodwork. Adjust joinery for uniform appearance.

B. Adjust moving or operating parts to function smoothly and correctly.

END OF SECTION 06 41 16

SECTION 07 11 13 - EMULSIFIED ASPHALT DAMPPROOFING

PART 1 - GENERAL

1.1 SECTION INCLUDES

A. Surface preparation.

B. Application of an emulsified asphalt dampproofing compound.

1.2 RELATED SECTIONS

A. Section 03 30 00 - Cast-in-Place Concrete.

1.3 REFERENCES

A. ASTM D 1187 - Standard Specification for Asphalt-Base Emulsions for Use as Protective Coatings for Metal.

B. ASTM D 1227 - Standard Specification for Emulsified Asphalt Used as a Protective Coating for Roofing.

1.4 SUBMITTALS

A. Comply with Section 01 33 00 - Submittal Procedures.

B. Submit manufacturer's product data and application instructions.

1.5 DELIVERY, STORAGE, AND HANDLING

A. Deliver materials to site in manufacturer's original, unopened containers and packaging, with labels clearly identifying product name and manufacturer.

B. Store materials in a clean dry area in accordance with manufacturer's instructions.

C. Store at temperatures of 40 degrees F and above to facilitate handling. Do not allow to freeze.

D. Do not store at temperatures above 90 degrees F for extended periods.

E. Keep away from sparks and flames.

F. Protect materials during handling and application to prevent damage or contamination.

1.6 ENVIRONMENTAL REQUIREMENTS

A. Product not intended for uses subject to abuse or permanent exposure to the elements.

B. Do not apply membrane when air or surface temperatures are below 40 degrees F.

C. Do not apply to frozen concrete.

D. Do not apply when rain is imminent.

PART 2 - PRODUCTS

2.1 MANUFACTURER

A. The Euclid Chemical Company, 19215 Redwood Road, Cleveland, OH 44110. Tel.: 800-321-7628. Fax: 216-531-9596. Website: www.euclidchemical.com

B. Other Manufacturers:
1. Substitutions: See Section 01 60 00 - Product Requirements

2.2 MATERIALS

A. Emulsified Asphalt Damproofing Compound: Provide damproofing compound derived from colloidal, asphalt-based clay emulsions, utilizing a water carrier. Product shall be in compliance with ASTM D1227 Type III and ASTM D1187 Type I.
1. Product:
a. The Euclid Chemical Company; DEHYDRATINE 75.

PART 3 - EXECUTION

3.1 EXAMINATION

A. Examine surfaces to receive membrane. Notify Architect if surfaces are not acceptable. Do not begin surface preparation or application until unacceptable conditions have been corrected.

3.2 SURFACE PREPARATION

A. Protect adjacent surfaces not designated to receive dampproofing.

B. Surface shall be structurally sound, clean, free of dust, dirt, mortar, residue curing and parging compounds, and other contaminants. Utilize wire brushes, sandblasting or other mechanical means to prepare surface. Prior to application, surface defects, voids, joints or cracks shall be properly sealed per manufacturer’s recommendations.

C. Dry surfaces shall be dampened with water and kept damp before application.

3.3 MIXING AND APPLICATION

A. Store, mix and apply Emulsified Asphalt Damproofing Compound within temperature constraints recommended in writing by manufacturer.

B. Mix Emulsified Asphalt Damproofing Compound per manufacturer's written instructions on literature.
   1. When applying in hot weather first coat may be diluted up to 10 percent with cool potable water per manufacturer's instructions.

C. Apply 2 coats of Emulsified Asphalt Damproofing Compound soft bristle brush or suitable spray equipment at a rate of not more than 33 ft^2/gal (0.81 m^2/L) in a single coat and as per manufacturer's written recommendations.
   1. First coat shall be dry to the point where it is tacky to the touch before the second coat is applied.

3.4 BACKFILLING

A. Do not backfill until the film has dried (at least 24 to 48 hours after application). Backfilling shall be accomplished as soon as possible (after 24 to 48 hours) to protect the film from damage by outside sources. Place backfill with care so that the film will not be ruptured.

END OF SECTION 07 11 13

SECTION 07 21 00 - BOARD AND BATT INSULATION

PART 1 - GENERAL

1.1 SECTION INCLUDES

A. Thermal board insulation for cavity wall construction, perimeter foundation wall, and underside of floor slabs.

B. Thermal batt insulation and vapor retarder over exterior linear metal soffit construction.

1.2 RELATED SECTIONS

A. Section 07 11 13 – Emulsified Asphalt Dampproofing.

B. Section 07 53 23 – EPDM Membrane Roofing: Board insulation as part of the roofing system.

C. Section 07 84 00 – Firestopping.

D. Section 09 29 00 – Gypsum Board Assemblies.

1.3 REFERENCES

A. ASTM C 665 - Standard Specification for Mineral-Fiber Blanket Thermal Insulation for Light Frame Construction and Manufactured Housing.

B. ASTM E 136 - Standard Test Method for Behavior of Materials in a Vertical Tube Furnace At 750 Degrees C.

1.4 SUBMITTALS

A. See Section 01 33 00 – Administrative Requirements, for submittal procedures.

B. Product Data: Provide data on product characteristics, performance criteria, and product limitations.

C. Manufacturer’s Installation Instructions: Include information on special environmental conditions required for installation and installation techniques.

D. Manufacturer’s Certificate: Certify the products meet or exceed specified requirements.

1.5 ENVIRONMENTAL REQUIREMENTS

A. Do not install insulation adhesives when temperature or weather conditions are detrimental to successful installation.

1.6 SEQUENCING

A. Sequence work to ensure the cavity wall vapor retarder and air barrier materials are in place before beginning work of this section.

B. Sequence work to ensure waterproofing materials are in place on the exterior of foundation walls before beginning work of this section.

1.7 COORDINATION

A. Coordinate the work with Section 07 26 16 for installation of vapor barrier under slab on grade.

B. Coordinate the work with Section 07 11 13 for installation of Dampproofing on exterior of foundation walls.

C. Coordinate the work with Section 07 27 26 for installation of fluid applied membrane air barriers, vapor impermeable, in cavity walls.

PART 2 - PRODUCTS

2.1 BOARD INSULATION MATERIALS

A. Extruded Polystyrene Board (XPS) Insulation: Extruded polystyrene board with either natural skin or cut cell surfaces; with the following characteristics:
   1. Board Size: 24 x 96 inch.
   2. Board Edges: Square.
   3. Thermal Resistance (R-Value): Min. 5.0 per inch of thickness.
   4. Compressive Strength: Min. 25 psi.
   5. Flame Spread: 10 (ASTM E84).
   6. Smoke Developed Index: 175 (ASTM E84).
   7. Product:
      a. Basis of Design: “Foamular” Extruded Polystrene (XPS) Board, manufactured by Owens Corning Corp: www.owenscorning.com.
   8. Substitutions: See Section 01 60 00 - Product Requirements.

B. Foundation Insulation Panels: Rigid foam insulation panels consisting of Owens Corning “Foamular” Extruded Polystyrene (XPS) Board with shop applied Total Wall “Tuff II” coating; with the following characteristics:
   1. Board Size: 24 x 96 inch.
   2. Board Edges: Square.
   3. Finish: Stucco.
   4. Thermal Resistance (R-Value): Min. 5.0 per inch of thickness.
   5. Tuff II Coating Flame Spread: 10 (ASTM E84).
   6. Tuff II Coating Smoke Developed Index: 35 (ASTM E84).
   7. XPS Flame Spread: 10 (ASTM E84).
   8. XPS Smoke Developed Index: 175 (ASTM E84).
   9. Product:
      a. Basis of Design: “FP Ultra LITE” Foundation Panels, manufactured by Styro Industries: www.styro.net.
   10. Substitutions: See Section 01 60 00 - Product Requirements.

2.2 BATT INSULATION MATERIALS

A. Batt Insulation: ASTM C665; preformed glass fiber batt; friction fit, conforming to the following:
   1. Combustibility: Non-combustible when tested in accordance with ASTM E 136.
   2. Provide insulation made without formaldehyde.
   3. Facing: Unfaced.
   4. Thermal Resistance (R-Value): As indicated on drawings.
   5. Flame Spread: <25 (ASTM E84).
   6. Smoke Developed Index: <50 (ASTM E84).
   7. Product: .
      a. Basis of Design: “EcoTouch Pink Fiberglas”, manufactured by Owens Corning Corp: www.owenscorning.com.
   8. Substitutions: See Section 01 60 00 - Product Requirements.

2.3 SOUND ATTENUATION BLANKETS

A. Mineral Wool Insulation: ASTM C665; Mineral Fiber Blanket Thermal Insulation, conforming to the following:
   1. Combustibility: Non-combustible when tested in accordance with ASTM E 136.
   2. Nominal Density: 2.5 pcf.
   3. Flame Spread: 0 (ASTM E84).
   4. Smoke Developed Index: 0 (ASTM E84).
   5. Product: .
      a. Basis of Design: “Thermafiber SAFB”, manufactured by Owens Corning Corp: www.owenscorning.com.
   6. Substitutions: See Section 01 60 00 - Product Requirements.

2.4 ACCESSORIES

A. Tape: Polyethylene self-adhering type, mesh reinforced, 2 inch wide.

B. Adhesive: Type recommended by insulation manufacturer for application.

PART 3 - EXECUTION

3.1 EXAMINATION

A. Verify that substrate, adjacent materials, and insulation materials are dry and that substrates are ready to receive insulation.

B. Verify substrate surfaces are flat and free of irregularities.

3.2 BOARD INSTALLATION AT FOUNDATION PERIMETER

A. Install insulation in accordance with manufacturer’s instructions.

B. Cut and fit insulation tightly to protrusions or interruptions to the insulation plane.

C. Butt edges and ends tightly to adjacent boards and to protrusions.

3.3 BOARD INSTALLATION AT CAVITY WALLS

A. Install insulation in accordance with manufacturer’s instructions.

B. Install boards to fit snugly between wall ties.

C. Install boards horizontally on walls.

D. Cut and fit insulation tightly to protrusions or interruptions to the insulation plane.

3.4 BOARD INSTALLATION UNDER CONCRETE SLABS

A. Install insulation in accordance with manufacturer’s instructions.

B. Place insulation under slabs on grade after base for slab has been compacted.

C. Cut and fit insulation tightly to protrusions or interruptions to the insulation plane.

D. Prevent insulation from being displaced or damaged while placing waterproofing and slab.

3.5 BATT INSTALLATION

A. Install insulation and vapor retarder in accordance with manufacturer's instructions.

B. Install in exterior wall spaces without gaps or voids. Do not compress insulation.

C. Trim insulation neatly to fit spaces. Insulate miscellaneous gaps and voids.

D. Fit insulation tightly in cavities and tightly to exterior side of mechanical and electrical services within the plane of the insulation.

E. Tape insulation batts in place.

F. Tape seal butt ends, lapped flanges, and tears or cuts in membrane.

G. Tape seal tears or cuts in vapor retarder.

H. Extend vapor barrier tightly to full perimeter of adjacent construction and other items interrupting the plane of the membrane. Tape seal in place.

3.6 PROTECTION OF FINISHED WORK

A. Do not permit installed insulation to be damaged prior to its concealment.

END OF SECTION 07 21 00

SECTION 07 25 13 - SILICONE WEATHER BARRIER TRANSITION

PART 1 - GENERAL

1.1 SUMMARY

A. Section Includes:

1. Weather barrier transitions serving as a component of building air- and moisture- barrier systems.

B. Related Sections:

1. Section 07 27 26 - Fluid-Applied Membrane Air Barriers, Vapor Impermeable.
2. Section 07 92 00 - Joint Sealants.
3. Section 08 44 13 - Glazed Aluminum Curtain Walls.

1.2 REFERENCE STANDARDS

A. ASTM D412 - Test Methods for Vulcanized Rubber and Thermoplastic Elastomers—Tension.

B. ASTM D624 - Test Method for Tear Strength of Conventional Vulcanized Rubber and Thermoplastic Elastomers

C. ASTM D2240 - Test Method for Rubber Property - Durometer Hardness.

D. ASTM E283 – Test Method for Determining Rate of Air Leakage Through Exterior Windows, Curtain Walls, and Doors Under Specified Pressure Differences Across the Specimen

E. ASTM E331 - Test Method for Water Penetration of Exterior Windows, Skylights, Doors, and Curtain Walls by Uniform Static Air Pressure Difference

1.3 QUALITY ASSURANCE

A. Mockups: Provide weather barrier transition application within mockups required in other sections identical to specified joint sealants and installation methods.

PART 2 - PRODUCTS

2.1 MANUFACTURERS

A. Basis-of-Design Product: Provide weather barrier transition products manufactured by DOW CORNING Corp., Midland MI; (877) SEALANT, (877) 732-5268; email: specification@dowcorning.com; website: www.dowcorning.com/construction.

B. Substitutions: See Section 01 60 00 - Product Requirements.

2.2 MATERIALS, GENERAL

A. Compatibility: Provide joint sealants and accessory materials that are compatible with one another, and with materials in close proximity under use conditions, as demonstrated by sealant manufacturer using ASTM C1087 testing and related experience.

B. Joint Sealant Standard: Comply with ASTM C920 and other specified requirements for each liquid-applied joint sealant.

2.3 LIQUID JOINT SEALANTS

A. Basis of Design Product: DOW CORNING Corporation, 758 Silicone Building Sealant.
   1. Hardness, ASTM D2240: 45 durometer Shore A.
   2. Color: To be selected by Architect from manufacturer’s standard color chart.

2.4 WEATHER BARRIER TRANSITION

A. Silicone Elastomer Weather Barrier Transition: Highly flexible clear flashing and transition sheet and pre-molded corners for bonding with silicone sealant to weather barrier substrates and to adjacent curtain wall, storefront, and window frames and other transition substrates.

   1. Basis of Design Product: DOW CORNING Corporation, Silicone Transition System (STS).
   2. Air Infiltration, ASTM E283: Air leakage of not more than 0.025 cfm/sq. ft. (0.127 L/s per sq. m) when tested according to ASTM E283 at test-pressure difference of 6.24 lbf/sq. ft. (300 Pa).
   3. Water Penetration under Static Pressure: No water penetration when tested according to ASTM E331 at test-pressure difference 15 lbf/sq. ft. (720 Pa).
   4. Movement Capability: Not less than plus 200, minus 75 percent.
   5. Tensile Strength, ASTM D412: Not less than 800 psi (5.5 MPa).
   6. Tear Strength, ASTM D624: Not less than 200 psi (16 kN/m).
   7. Elongation, ASTM D412: Not less than 400 percent.
   8. Hardness, ASTM D412: 50 - 60 durometer Shore A.
   9. Bonding Sealant: Manufacturer's recommended neutral-curing silicone.

2.5 ACCESSORIES

A. Joint Substrate Primers: Substrate primer recommended by sealant manufacturer for application.

PART 3 - EXECUTION

3.1 EXAMINATION

A. Examine joint profiles and surfaces to determine if work is ready to receive joint sealants. Verify joint dimensions are adequate for development of sealant movement capability. Proceed with joint sealant work once conditions meet sealant manufacturer's recommendations.

3.2 PREPARATION

A. Joint Surface Cleaning: Clean joints prior to installing joint sealants using materials and methods recommended by sealant manufacturer.

1. Remove laitance, form-release agents, dust, and other contaminants.
2. Clean nonporous and porous surfaces utilizing chemical cleaners acceptable to sealant manufacturer.

3.3 SEALANT APPLICATION

A. Sealant Installation Standard: Comply with recommendations in ASTM C1193 for use of joint sealants as applicable to materials, applications, and conditions indicated.

B. Masking: Mask adjacent surfaces to prevent staining or damage by contact with sealant or primer.

C. Joint Priming: Prime joint substrates when recommended by sealant manufacturer or when indicated by preconstruction testing or experience. Apply recommended primer using sealant manufacturer's recommended application techniques.

D. Liquid Sealant Application: Install sealants using methods recommended by sealant manufacturer, in depths recommended for application. Apply in continuous operation from bottom to top of joint vertically and horizontally in a single direction. Apply using adequate pressure to fill and seal joint width.

1. Tool sealants immediately with appropriately shaped tool to force sealants against joint backing and joint substrates, eliminating voids and ensuring full contact.
2. Using tooling agents approved by sealant manufacturer for application.

E. Cleaning: Remove excess sealant using materials and methods approved by sealant manufacturer that will not damage joint substrate materials.

1. Remove masking tape immediately after tooling joint without disturbing seal.
2. Remove excess sealant from surfaces while still uncured.

3.4 WEATHER BARRIER TRANSITION APPLICATION

A. Preparation: Prepare field of weather barrier surface and surface of adjacent substrate in accordance with sealant manufacturer's written instructions. Perform field adhesion testing to determine need for application of primer. Clean surfaces to dust free, and perform solvent wipe where recommended.

B. Application: Apply bead of recommended liquid joint sealant to each side of joint in bead size recommended by manufacturer. Press transition extrusion into sealant using roller to ensure uniform and complete contact. Lap vertical and horizontal joints as indicated in manufacturer's instructions. Trim transition material. Remove excess sealant.

3.5 FIELD QUALITY CONTROL

A. Field-Adhesion Testing: Perform adhesion tests in accordance with manufacturer's instructions and with ASTM C1193, Method A.

1. Perform 1 test per each floor per building elevation, minimum.
2. For sealant applied between dissimilar materials, test both sides of joint.

B. Remove sealants failing adhesion test, clean substrates, reapply sealants, and re-test. Test adjacent sealants to failed sealants.

C. Submit report of field adhesion testing to Architect indicating tests, locations, dates, results, and remedial actions taken.

END OF SECTION 07 25 13

SECTION 07 26 16 - UNDERSLAB VAPOR RETARDER

PART 1 - GENERAL

1.1 SECTION INCLUDES

A. Surface preparation.

B. Application of an underslab vapor retarder.

1.2 RELATED SECTIONS

A. Section 03 30 00 – Cast-in-Place Concrete

1.3 REFERENCES

A. ASTM D1709 - 09 Standard Test Methods for Impact Resistance of Plastic Film by the Free-Falling Dart Method.

B. ASTM E96 - Standard Test Methods for Water Vapor Transmission of Materials.

C. ASTM E154 - Standard Test Methods for Water Vapor Retarders Used in Contact with Earth Under Concrete Slabs.

D. ASTM E1643 - Standard Practice for Installation of Water Vapor Retarders Used in Contact with Earth or Granular Fill Under Concrete Slabs.

E. ASTM E1745 - Standard Specification for Plastic Water Vapor Retarders Used in Contact with Soil or Granular Fill Under Concrete Slabs.

F. ASTM F1249-01 Standard Test Method for Water Vapor Transmission Rate Through Plastic Film and Sheeting Using a Modulated Infrared Sensor.

1.4 SUBMITTALS

A. Comply with Section 13 30 00 – Submittals.

B. Submit manufacturer's product data and application instructions.

1.5 QUALITY ASSURANCE

A. Use an experienced installer and adequate number of skilled personnel who are thoroughly trained and experienced in the application of the vapor retarder.

B. Obtain vapor retarder materials from a single manufacturer regularly engaged in manufacturing the product.

C. Provide products which comply with all state and local regulations controlling use of volatile organic compounds (VOCs).

1.6 DELIVERY, STORAGE, AND HANDLING

A. Deliver materials to site in manufacturer's original, unopened containers and packaging, with labels clearly identifying product name and manufacturer.

B. Store materials in a clean, dry area in accordance with manufacturer's instructions.

C. Protect materials during handling and application to prevent damage or contamination.

D. Ensure membrane is stamped with manufacturer's name, product name, and membrane thickness at intervals of no more than 85" (220 cm).

1.7 ENVIRONMENTAL REQUIREMENTS

A. Product not intended for uses subject to abuse or permanent exposure to the elements.

B. Do not apply on frozen ground.

PART 2 - PRODUCTS

2.1 MANUFACTURERS

A. 'PERMINATOR' 10 mil by W. R. Meadows, Inc., PO Box 338, Hampshire, Illinois 60140-0338. (800) 342-5976. (847) 683-4500. Fax (847) 683-4544. Web Site www.wrmeadows.com.

B. Other Approved Manufacturers:
   1. 'Stego Wrap' 10 mil by Stego Industries, LLC. Web Site www.stegoindustries.com
   2. 'Vaporblock VB10' 10 mil by Raven Engineered Films. Web Site www.ravenefd.com

2.2 MATERIALS

A. Plastic Vapor Retarder
   1. Vapor retarder membrane shall be manufactured from virgin polyolefin resins and shall meet or exceed all requirements of ASTM E1745, Class A.
      a. Maximum Water Vapor Permeance (ASTM E154 Sections 7, 8, 11, 12, 13, by ASTM E96, Method B or ASTM F1249)
         i. As received: 0.0183 perms.
         ii. After Wetting and Drying: 0.0219 perms.
         iii. Resistance to Plastic Flow and Temperature: 0.0197 perms.

iv. Effect Low Temperature and Flexibility: 0.0212 perms
v. Resistance to Deterioration from Organisms and Substances in Contacting Soil: 0.0198 perms.

b. Puncture Resistance (ASTM D1709): >3,500 grams.
c. Tensile Strength ASTM E154, Section 9: 52 Lb. Force/Inch

2.3 ACCESSORIES

A. Seam Tape
1. High Density Polyethylene Tape with pressure sensitive adhesive. Minimum width 4” (100 mm).

B. Pipe Collars
1. Construct pipe collars from vapor retarder material and pressure sensitive tape per manufacturer’s instructions.

PART 3 - EXECUTION

3.1 SURFACE PREPARATION

A. Prepare surfaces in accordance with manufacturer’s instructions.

B. Level, tamp, or roll earth or granular material beneath the slab base.

3.2 EXAMINATION

A. Examine surfaces to receive membrane. Notify architect if surfaces are not acceptable. Do not begin surface preparation or application until unacceptable conditions have been corrected.

3.3 APPLICATION

A. Install the vapor retarder membrane in accordance with manufacturer’s instructions and ASTM E 1643–98.

B. Unroll vapor retarder with the longest dimension parallel with the direction of the pour.

C. Lap vapor retarder over footings and seal to foundation walls.

D. Overlap joints 6” (152 mm) and seal with manufacturer’s tape.

E. Seal all penetrations (including pipes) with manufacturer’s pipe boot.

F. No penetration of the vapor retarder is allowed except for reinforcing steel and permanent utilities.

G. Repair damaged areas by cutting patches of vapor barrier, overlapping damaged area 6” (152 mm) and taping all four sides with tape.

END OF SECTION 07 26 16

SECTION 07 27 00 – FLUID-APPLIED MEMBRANE AIR BARRIERS, VAPOR PERMEABLE

PART 1 - GENERAL

1.1 SUMMARY

A. The work of this section includes, but is not limited to, the following:

1. Materials and installation methods for fluid-applied membrane air barrier, vapor impermeable system located in the non-accessible part of the wall.
2. Materials and installation methods to bridge and seal air leakage pathways in roof and foundation junctions, window and door openings, control and expansion joints, masonry ties, piping and other penetrations through the wall assemblies.

B. Related Sections:

1. Section 03 30 00 – Cast-In-Place Concrete
2. Section 07 92 00 – Joint Sealers

1.2 RELATED SECTIONS

1. Section 03 30 00 – Cast-In-Place Concrete.
2. Section 04 20 00 - Unit Masonry.
3. Section 04 25 13 – Thin Brick Panel System.
4. Section 07 53 23 – EPDM Membrane Roofing.
5. Section 08 41 13 – Aluminum-Framed Entrance Doors.
6. Section 08 44 13 – Glazed Aluminum Curtain Walls.

1.3 REFERENCES

A. The following standards and publications are applicable to the extent referenced in the text. The most recent version of these standards is implied unless otherwise stated.

B. American Society for Testing and Materials (ASTM)

1. ASTM A 240/A 240M - Standard Specification for Chromium and Chromium-Nickel Stainless Steel Plate, Sheet, and Strip for Pressure Vessels and for General Applications
2. ASTM C 920 - Standard Specification for Elastomeric Joint Sealants
3. ASTM C 1193 - Guide for Use of Joint Sealants
4. ASTM D 412 - Standard Test Methods for Vulcanized Rubber and Thermoplastic Elastomers - Tension
5. ASTM E 84 - Standard Test Method for Surface Burning Characteristics of Building Materials
6. ASTM E 96/E 96M - Standard Test Methods for Water Vapor Transmission of Materials
7. ASTM E 162 - Standard Test Method for Surface Flammability of Materials Using a Radiant Heat Energy Source
8. ASTM E 783 - Standard Test Method for Field Measurement of Air Leakage through Installed Exterior Windows and Doors
9. ASTM E 1186 - Practices for Air Leakage Site Detection in Building Envelopes and Air Barrier Systems

10. ASTM E 2178 - Standard Test Method for Air Permeance of Building Materials
11. ASTM E 2357 - Standard Test Method for Determining Air Leakage of Air Barrier Assemblies

C. National Fire Protection Association (NFPA)

1. NFPA 285 - Standard Fire Test Method for Evaluation of Fire Propagation Characteristics of Exterior Non-Load-Bearing Wall Assemblies Containing Combustible Components

1.4 ADMINISTRATIVE REQUIREMENTS

A. Coordination: Coordinate installation of joint sealants with cleaning of joint sealant substrates and other operations that may impact installation or finished joint sealant work.

B. Preinstallation Conference: Conduct conference at Project Site.

1. Review requirements for air barrier products and installation, project and manufacturer's details, mockups, testing and inspection requirements, and coordination and sequencing of air barrier work with work of other Sections.
2. Review manufacturer's instructions for air barrier application meeting Project requirements for substrates specified, including three-dimensional video model demonstrating proper application of components at wall openings.

1.5 ACTION SUBMITTALS

A. Product Data: For each type of air barrier product specified, including:

1. Technical data indicating compliance with requirements.
2. Substrate preparation instructions and recommendations.

B. Shop Drawings: Show locations for air barrier. Show details for each type of substrate, joints, and edge conditions, including flashings, counterflashings, penetrations, transitions, and terminations.

1. Show location of transition and accessory materials providing connectivity through out the assemblies.

1.6 INFORMATIONAL SUBMITTALS

A. Qualification Data:

1. Certification of manufacturer's approval of Installer.

B. Manufacturer's Product Compatibility Certificate: Certify compatibility of air barrier products with adjacent materials.

C. Fire Propagation Characteristics Certificate: From a qualified testing agency, documentation that air barrier system as a component of a wall assembly has been tested and passed NFPA 285. Include system classification number of testing agency on shop drawings.

D. Product Test Reports: Test data for air barrier products and air barrier assembly, by qualified testing agency, indicating proposed membrane air barrier meets performance requirements, when requested by Architect.

E. Warranty: Sample of unexecuted manufacturer and installer special warranties.

F. Field quality control reports.

1.7 QUALITY ASSURANCE

A. Installer Qualifications: A firm with minimum three years experience in installation of specified products in successful use on similar projects, employing workers trained by manufacturer, including a full-time on-site supervisor with a minimum of three years experience installing similar work, able to communicate verbally with Contractor, Architect, and employees.

B. Manufacturer Qualifications: A qualified manufacturer with minimum five years experience in manufacture of air barrier membrane as one of its principal products.

1. Manufacturer's product submitted has been in satisfactory operation on five similar installations for at least five years.
2. Manufacturer is accredited by the Air Barrier Association of America.
3. Approval of Manufacturers and Comparable Products: Submit the following in accordance with project substitution requirements, within time allowed for substitution review:
   a. Product data, including certified independent test data indicating compliance with requirements.
   b. Sample shop drawings from similar project.
   c. Project references: Minimum of five installations of similar system not less than five years old, with Owner and Architect contact information.
   d. Certificate of ABAA accreditation if required for Project.
   e. Sample warranty.

C. Air Barrier Inspector Qualifications: A technical representative of manufacturer not engaged in the sale of products and experienced in the installation and maintenance of the specified air barrier system, qualified to perform observation and inspection specified in Field Quality Control Article, to determine Installer’s compliance with the requirements of this Project, and approved by the manufacturer to issue warranty certification. The Inspector shall be one of the following:

1. An authorized full-time technical employee of the manufacturer.
2. A independent party certified as an air barrier inspector by the ABAA or other certifying organization acceptable to Architect, retained by the Contractor.

D. Mockups: Provide air barrier mockup application within mockups required in other sections, or if not specified, in an area of not less than 150 sq. ft of wall surface where directed by Architect for each type of backup wall construction. Include examples of surface preparation, crack and joint treatment, air barrier application, and flashing, transition, and termination conditions, to set quality standards for execution.

1. Include intersection of wall air barrier with roof air barrier and with foundation wall intersection.

1.8 DELIVERY, STORAGE AND HANDLING

A. Accept materials on site in manufacturer's unopened original packaging.

B. Store products in weather protected environment, clear of ground and moisture, within temperature ranges recommended by air barrier manufacturer.

C. Construction Waste: Store and dispose of packaging materials and construction waste in accordance with requirements of Section 01 74 19 Construction Waste Management.

1.9 ENVIRONMENTAL REQUIREMENTS

A. Environmental Limitations: Apply air barrier within the range of ambient and substrate temperatures recommended by air-barrier manufacturer.

1. Protect substrates from environmental conditions that affect air-barrier performance.
2. Do not apply air barrier to a damp or wet substrate or during snow, rain, fog, or mist.

1.10 SCHEDULING

A. Coordinate installation of membrane air barrier with completion of roofing and other work requiring interface with air barrier.

B. Schedule work so air barrier applications may be inspected prior to concealment.

C. Ensure air barrier materials are cured before covering with other materials.

PART 2 - PRODUCTS

2.1 MANUFACTURERS

A. Basis-of-Design Products: Provide air barrier products manufactured by Tremco, Inc., Commercial Sealants and Waterproofing Division, An RPM Company, Beachwood OH; (866) 321-6357; email: techresources@tremcoinc.com; www.tremcosealants.com.

2.2 MATERIALS, GENERAL

A. Source Limitations: Obtain air-barrier materials from single source from single manufacturer.

B. Compatibility: Provide membrane air barrier materials that are compatible with one another and with adjacent materials under conditions of service and application required, as demonstrated by membrane air barrier manufacturer based on testing and field experience.

2.3 PERFORMANCE REQUIREMENTS

A. General: Membrane air barrier shall be capable of performing as a continuous vapor-permeable air barrier and as a moisture drainage plane transitioned to adjacent flashings and discharging water to the building exterior. Membrane air barriers shall accommodate substrate movement and seal expansion and control joints, construction material transitions, opening

transitions, penetrations, and perimeter conditions without moisture deterioration and air leakage exceeding performance requirements.

B. Air-Barrier Assembly Air Leakage: Maximum 0.04 cfm/sq. ft. of surface area at 1.57 lbf/sq. ft., when tested according to ASTM E 2357.

C. Fire Propagation Characteristics: Provide air barrier system qualified as a component of a comparable wall assembly that has been tested and passed NFPA 285.

2.4 MEMBRANE AIR BARRIER

A. Fluid-Applied, Vapor-Permeable Membrane Air Barrier: Elastomeric, UV-resistant, synthetic membrane, formulated for application in a range of 48 - 70 mils (wet), 25 - 35 mils (dry).

1. Basis of Design Product: Tremco, Inc., ExoAir 230.
2. Air Permeance, ASTM E 2178: 0.004 cfm/sq. ft of surface area at 1.57-lbf/sq. ft. (0.02 L/s x sq. m of surface area at 75-Pa) pressure difference, maximum.
3. Vapor Permeance, ASTM E 96/E96M: Minimum 12 perms (690 ng/Pa x s x sq. m).
4. Elongation, Ultimate, ASTM D 412, Die C: 600 percent, minimum.
5. Combustion Characteristics: Class A, flame spread, not greater than 25; smoke developed, not greater than 450, per ASTM E 84.
6. UV Resistance, QUV-B: Over 160 cycles of UV and water spray with no observable deterioration.
7. VOC Content: Less than 50 g/L.

2.5 ACCESSORY MATERIALS

A. General: Accessory materials as described in manufacturer's written installation instructions, recommended to produce complete air barrier assembly meeting performance requirements, and compatible with air barrier membrane material and adjacent materials.

B. Primer: Liquid primer meeting VOC limitations, recommended for substrate by membrane air barrier manufacturer, when installing modified bituminous self-adhered membranes.

1. Basis of Design Product: Tremco, Inc., ExoAir Primer

C. Transitions:

1. Counterflashing Strip: Modified bituminous, 40 mils (1.0 mm) thick self-adhering composite sheet consisting of 32 mils (0.8 mm) of SBS rubberized asphalt laminated to an 8 mils (0.2 mm) high-density, cross-laminated polyethylene film, for counterflashing of metal flashings and for substrate transitions and for termination of air barrier to bituminous roof membranes and to air barrier terminations at openings.
   a. Basis of Design Product: Tremco, Inc., ExoAir TWF Thru-Wall Flashing.
2. High Temperature Flashing Strip and Underlayment: Butyl, 24 mil thick self-adhering composite sheet consisting of 20 mils of butyl laminated to 4 mil polyethylene film; thermally stable under intermittent, non-continuous exposure up to 240 deg F (115 deg C). Fixed EA 110AT to show once at the proper mils. The mils are 18 mils.
   a. Basis of Design Product: Tremco, Inc., ExoAir 110AT.

3. Flashing Strip: Butyl, 22 mil thick self-adhering composite sheet consisting of 16 mils of butyl laminated to 6 mil polypropylene film; thermally stable under intermittent, non-continuous exposure up to 240 deg F (115 deg C)
4. Opening Transition Assembly: Cured low-modulus silicone extrusion, with reinforcing ribs, sized to fit opening widths, [with aluminum race for insertion into aluminum framing extrusions,] with the following characteristics:
   a. Basis of Design Product: Tremco, Inc., Proglaze ETA Engineered Transition Assembly. Tear Strength: 110 lb/in (19.3 kN/m)
5. Preformed Silicone-Sealant Extrusion: Manufacturer's standard system consisting of cured low-modulus silicone extrusion, sized to fit opening widths, with manufacturer's recommended silicone sealant for bonding extrusions to substrates.
   a. Basis of Design Product: Tremco, Inc.; Spectrem SimpleSeal.

D. Reinforcing Fabric: High strength mesh fabric consisting of open-weave glass fiber saturated with synthetic resins formulated for high moisture resistance, for reinforcing of liquid applications; not less than 2.5 oz/sq. yd (85 g/sq. m).

1. Basis of Design Product: Tremco, Inc., Tremco 2011.

E. Liquid Joint Sealants:
1. ASTM C 920, single-component polyurethane, approved by air barrier manufacturer for adhesion and compatibility with membrane air barrier and accessories.
   a. Basis of Design Product: Tremco, Inc., Dymonic 100.
2. ASTM C 920, single-component, neutral-curing silicone, approved by air barrier manufacturer for adhesion and compatibility with membrane air barrier and accessories post installation of the membrane.
   a. Basis of Design Product: Tremco, Inc., Spectrem 1.
3. Single-component STPU, approved by air barrier manufacturer for adhesion and compatibility with membrane air barrier and accessories.
   a. Basis of Design Product: Tremco, Inc., ExoAir DualFlash.

F. Sprayed Polyurethane Foam Sealant: Sprayed Polyurethane Foam Sealant: Foamed-in-place, 1.5- to 2.0-lb/cu. ft. (24- to 32-kg/cu. m) density, with flame-spread index of 25 or less per ASTM E 162, for filling of gaps at openings and penetrations.

1. Basis of Design; Tremco Inc., Flexible Low Expanding Foam (LEF)

PART 3 - EXECUTION

3.1 EXAMINATION

A. Surface Condition: Before applying air barrier materials, examine substrate and conditions to ensure substrates are fully cured, smooth, clean, dry, and free from high spots, depressions, loose and foreign particles and other deterrents to adhesion, and conditions comply with manufacturer's written recommendations.

1. Verify concrete and masonry surfaces are visibly dry, have cured for time period recommended by membrane air barrier manufacturer, and are free from release agents, curing agents, and other contaminates.

2. Test for capillary moisture by method recommended in writing by air barrier manufacturer.
3. Verify masonry joints are filled with mortar and struck flush.

B. Proceed with installation only after unsatisfactory conditions have been corrected.

3.2 INTERFACE WITH OTHER WORK

A. Commencement of Work: Commence work once air barrier substrates are adequately protected from weather and will remain protected during remainder of construction.

B. Sequencing of Work: Coordinate sequencing of air barrier work with work of other sections that form portions of building envelope air barrier to ensure that flashings and transition materials can be properly installed and inspected. Roofing systems shall be capped and sealed, or top of walls protected, in such a way as to eliminate the ability of water to saturate the wall or interior space, both before and after, air barrier system installation. Coordinate installation of EXOAIR® 230 with the roofing trade to ensure compatibility and continuity with the roofing system.

C. Subsequent Work: Coordinate air barrier work with work of other sections installed subsequent to air barrier to ensure complete inspection of installed air barrier and sealing of air barrier penetrations necessitated by subsequent work.

3.3 PREPARATION

A. Clean, prepare, and treat substrate in accordance with air barrier manufacturer's written instructions.

1. Mask adjacent finished surfaces.
2. Remove contaminants and film-forming coatings from substrates.
3. Remove projections and excess materials and fill voids with substrate patching material.
4. Prepare and treat joints and cracks in substrate per ASTM C 1193 and membrane air barrier manufacturer's written instructions.

3.4 APPLICATION OF ACCESSORY MATERIALS

A. General: Install strips, transition strips, and accessory materials according to air-barrier manufacturer's written instructions. Install transition materials and other accessories to form connect and seal membrane air barrier material to adjacent components of building air barrier system, including, but not limited to, roofing system air barrier, exterior fenestration systems, door framing, and other openings.

B. Primer: Apply primer to substrates when recommended by air barrier manufacturer at required rate for those substrates that will be receiving a modified bituminous self-adhered membrane. Reprime areas not covered within 24 hours.

C. Assembly Transitions: Connect and seal exterior wall air barrier material continuously to roofing-membrane air barrier, concrete below-grade structures, floor-to-floor construction, exterior glazing and window systems, glazed curtain-wall systems, storefront systems, exterior louvers, exterior door framing, and other construction used in exterior wall openings, using accessory materials.

1. Opening Transitions: Fill gaps at perimeter of openings with foam sealant and apply approved transition or accessory material
2. Penetrations: Fill gaps at perimeter of penetrations with foam sealant and level with approved sealant. or seal transition strips around penetrating objects and terminate with approved sealant.
3. Joints: Bridge and cover isolation joints, expansion joints, and discontinuous joints between separate assemblies utilizing approved transition or accessory materials.
4. Changes in Plane: Apply approved sealant beads at corners and edges to form smooth transition.
5. Substrate Gaps: Cover gaps with stainless steel sheet mechanically attached to substrate and providing continuous support for air barrier.

D. Flashings: Seal top of through-wall flashings to membrane air barrier with a continuous bead of approved sealant recommended by air barrier manufacturer.

E. Seal punctures, voids, and seams. Patch with approved transition and accessory materials following air barrier manufacturer’s recommendations and extend repair beyond repaired areas to maintain continuity.

3.5 FLUID AIR-BARRIER MEMBRANE INSTALLATION

A. General: Apply fluid air-barrier material to form a seal with transition materials and accessories to achieve a continuous air barrier according to air-barrier manufacturer's written instructions. Apply fluid air-barrier material within manufacturer's recommended application temperature ranges.

B. Membrane Air Barrier: Apply fluid air barrier material in full contact with substrate to produce a continuous seal according to membrane air barrier manufacturers written instructions.

1. Vapor-Permeable Membrane Air Barrier: Total dry film thickness as recommended in writing by manufacturer to meet performance requirements, -in a range of 25 – 35 mils (1.0-mm) dry film thickness depending on substrate, applied in one or more equal coats, roller- or spray- applied.

C. Connect and seal exterior wall air-barrier membrane continuously to subsequently-installed roofing-membrane air barrier, concrete below-grade structures, floor-to-floor construction, exterior glazing and window systems, glazed curtain-wall systems, storefront systems, exterior louvers, exterior door framing, wall openings, and other construction used in exterior wall openings, using approved transitions and accessory materials.

D. Wall Openings: Apply approved sealant to adhere silicone extrusion to perimeter of windows, curtain walls, storefronts, doors, and louvers. Apply [opening transition assembly] [preformed silicone sealant extrusion] according to air barrier transition manufacturer’s written instructions.

E. Seal punctures, voids, and seams. Patch with approved transition and accessory materials following air barrier manufacturer’s recommendations and extend repair beyond repaired areas to maintain continuity.

F. Do not cover air barrier until it has been tested and inspected by Owner's testing agency.

G. Correct deficiencies in or remove air barrier that does not comply with requirements; repair substrates and reapply air-barrier components.

3.6 CLEANING AND PROTECTING

A. Clean spills, stains, and overspray resulting application utilizing cleaning agents recommended by manufacturers of affected construction. Remove masking materials.

B. Protect membrane air barrier from damage from subsequent work. Protect membrane materials from exposure to UV light for period in excess of that acceptable to membrane air barrier manufacturer; replace overexposed materials and retest.

END OF SECTION 07 27 00

SECTION 074213 - METAL COMPOSITE MATERIAL WALL PANELS

PART 1 - GENERAL

1.1 RELATED DOCUMENTS

A. Drawings and general provisions of the Contract, including General and Supplementary Conditions and Division 01 Specification Sections, apply to this Section.

1.2 SUMMARY

A. Section includes MCM wall panels.

1.3 DEFINITIONS

A. MCM: Metal Composite Material is two sheets of smooth aluminum continuously thermo-bonded to a solid Fire Retardant (FR) core under precise temperature, pressure, and tension.

1.4 PREINSTALLATION MEETINGS

A. Preinstallation Conference:

1. Meet with Owner, Architect, MCM panel Fabricator and Installer, MCM sheet manufacturer's representative, structural-support Installer, and installers whose work interfaces with or affects MCM panels, including installers of doors, windows, and louvers.
2. Review and finalize construction schedule and verify availability of materials, Installer's personnel, equipment, and facilities needed to make progress and avoid delays.
3. Examine support conditions for compliance with requirements, including alignment between and attachment to structural members.
4. Review flashings, special siding details, wall penetrations, openings, and condition of other construction that affect MCM panels.
5. Review governing regulations and requirements for insurance, certificates, and tests and inspections if applicable.
6. Review temporary protection requirements for MCM panel assembly during and after installation.
7. Review procedures for repair of panels damaged after installation.
8. Document proceedings, including corrective measures and actions required, and furnish copy of record to each participant.

1.5 ACTION SUBMITTALS

A. Product Data: For each type of product.

1. Include construction details, material descriptions, dimensions of individual components and profiles, and finishes for each type of panel and accessory.

B. Shop Drawings:

1. MCM system fabricator to provide shop drawings and calculations, signed and sealed by a Professional Engineer licensed in the State of New York, including fabrication and installation layouts of MCM panels; details of edge conditions, joints, panel profiles, corners, attachment assembly, trim, flashings, closures, and accessories; and special details.
2. Accessories: Include details of the flashing, trim and anchorage, at a scale of not less than 1-1/2 inches per 12 inches.

C. Samples: For each type of MCM panel indicated with factory-applied color finishes.

1. Include similar Samples of trim and accessories involving color selection.

1.6 INFORMATIONAL SUBMITTALS

A. Product Test Reports: For each product, tests performed by a qualified testing agency.
1. MCM Manufacturer's Material Test Reports: Certified test reports showing compliance with specific performance or third-party listing documenting compliance to Sections 1407.14 and 1703.5 of the 2020 Building Code of New York State.

2. MCM System Fabricator's Certified System Tests Reports: Certified system test reports showing system compliance with specific performance or third-party listing documenting compliance code section. Base performance requirements on MCM system type provided.
a. Wet Seal System: Tested to AAMA 501.
b. NFPA 285.

B. Field quality-control reports.

C. Sample Warranties

1.7 CLOSEOUT SUBMITTALS

A. Maintenance Data: For MCM panels to include in maintenance manuals.

1.8 QUALITY ASSURANCE

A. MCM Manufacturer Qualifications: An entity that has successfully manufactured MCM at a domestically located factory for a minimum of 5 years.

B. MCM Fabricator Qualifications: An entity that has successfully fabricated and assembled MCM panels and approved by the MCM manufacturer.

C. MCM Installer Qualifications: An entity that employs installers and supervisors who are trained and approved by MCM Fabricator.

D. Mockups: Build mockups to verify selections made under Sample submittals and to demonstrate aesthetic effects and set quality standards for MCM fabrication and installation.
1. Build mockup of typical MCM panel assembly including supports, attachments, and accessories.

2. Water-Spray Test: Conduct water-spray test of mockup of MCM panel assembly, testing for water penetration in accordance with AAMA 501.2.
3. Subject to compliance with requirements, approved mockups may become part of the completed Work if undisturbed at time of Substantial Completion.

1.9 DELIVERY, STORAGE, AND HANDLING

A. Deliver components, MCM panels, and other manufactured items so as not to be damaged or deformed. Package MCM panels for protection during transportation and handling.

B. Unload, store, and erect MCM panels in a manner to prevent bending, warping, twisting, and surface damage.

C. Stack MCM panels on platforms or pallets, covered with suitable weathertight and ventilated covering. Store MCM panels to ensure dryness, with positive slope for drainage of water. Do not store MCM panels in contact with other materials that might cause staining, denting, or other surface damage.

D. Retain strippable protective covering on MCM panels during installation.

1.10 FIELD CONDITIONS

A. Weather Limitations: Proceed with installation only when existing and forecasted weather conditions permit assembly of MCM panels to be performed in accordance with manufacturers' written instructions and warranty requirements.

1.11 COORDINATION

A. Coordinate MCM panel installation with rain drainage work, flashing, trim, construction of soffits, and other adjoining work to provide a leakproof, secure, and noncorrosive installation.

1.12 WARRANTY

A. Refer to Manufacturer’s standard terms and conditions.

B. Material Warranty: Submit the Manufacturer’s standard form agreeing to furnish fabrication, labor and material to repair or replace MCM that exhibits defects within the specified warranty period.

1. Coverage Includes:
   a. Delamination of metal bond to the fire retardant core.

2. Warranty Period: 10 years from date of Substantial Completion

C. Workmanship Warranty: Submit the Fabricator/Installer’s standard form agreeing to furnish fabrication, labor and material required to repair or replace work which exhibits workmanship defects within the specific warranty period.

1. Warranty Period: 2 years from the date of Substantial Completion.

D. Warranty on Panel Finishes: Submit the Manufacturer's standard form in which manufacturer agrees to repair or replace MCM panels that show evidence of deterioration of factory-applied finishes within specified warranty period.

1. Coverage includes:
   a. Color fading more than (5) Delta E units when tested according to ASTM D 2244.
   b. Chalking in excess of a No. 8 rating when tested according to ASTM D 4214.
   c. Cracking, checking, peeling, or failure of the paint to adhere to the bare metal substrate.

2. Warranty Period: 20 years from date of Substantial Completion.

PART 2 - PRODUCTS

2.1 PERFORMANCE REQUIREMENTS

A. Structural Performance: Provide MCM panel systems capable of withstanding the effects of the following loads, based on testing in accordance with ASTM E330:
   1. Wind Loads: As indicated on Drawings.
   2. Panel Deflection Limit: For wind loads, no greater than 1/60. of the span.
   3. Framing Member Deflection Limits: For wind loads, no greater than 1/175 of the span.

B. Air Infiltration: Air leakage of not more than 0.06 cfm/sq. ft. (0.3 L/s per sq. m) of wall area when tested in accordance with ASTM E283 at a test-pressure difference of 6.24 lbf/sq. ft. (300 Pa).

C. Water Penetration under Static Pressure: No water penetration to room side of assembly when tested for 15 minutes in accordance with ASTM E331 a test-pressure difference of 6.24 lbf/sq. ft. (300 Pa).

D. Thermal Movements: Locate expansion and contraction points to allow for free and noiseless thermal movements from surface temperature changes at a range of 20 deg F to 180 deg F (minus 29 to 82.2 deg C), material surfaces.

E. Fire Propagation Characteristics: MCM wall assembly passes NFPA 285 testing.

2.2 MCM WALL PANELS

A. MCM Wall Panel Systems: Provide shop formed and assembled, MCM panels formed into profiles for the installation method indicated on the construction drawings. Include attachment assembly components**,** panel stiffeners, and accessories required.

1. Basis-of-Design Product: Subject to compliance with requirements, provide ALUCOBOND® PLUS manufactured by 3A Composites USA Inc., or comparable product by:
   a. Arconic Architectural Products.
   b. Mitsubishi Chemical Composites.

B. Aluminum-Faced Composite Wall Panels: Formed with 0.020-inch- (0.50-mm-) thick aluminum sheet facings.

1. Panel Thickness: 4mm (0.157”)
2. Core: Fire retardant.
3. Exterior Finish: Acceptable coating resins are polyvinylidene difluoride (PVDF), fluorinated ethylene vinyl ether (FEVE), super-durable polyester (SDP), siliconized polyester (SMP) & anodized. The number of coats and film thicknesses shall comply with the specified warranty period and specified basis-of-design finish(es):

    a. Basis-of-design finish(es):

        1) Color and Finish: To be determined by Architect from manufacturer’s standard color range and finishes.

4. Peel Strength: 22.5 in-lb/in. (100 N x mm/mm) when tested for bond integrity in accordance with ASTM D1781.
5. Fire Performance: Flame spread less than 25 and smoke developed less than 450, in accordance with ASTM E84.

C. Attachment Assembly Components: Formed from extruded aluminum or other compatible material per the construction drawings and in compliance with all required performance testing.

2.3 MISCELLANEOUS MATERIALS

A. Miscellaneous Metal Sub Framing and Furring: ASTM C645, cold-formed, metallic-coated steel sheet ASTM A653/A653M, G90 (Z275 hot-dip galvanized) coating designation or ASTM A792/A792M, Class AZ50 (Class AZM150) aluminum-zinc-alloy coating designation unless otherwise indicated. Provide Fabricator's standard sections as required for support and alignment of MCM panel system.

B. Panel Accessories: Provide components required for a weathertight panel system including trim and flashing components as indicated on the constructions drawings. Match material and finish of MCM panels unless otherwise indicated.

C. Flashing and Trim: Provide flashing and trim formed from same material as MCM panels as required to seal against weather and to provide finished appearance. Locations include, but are not limited to, bases, drips, sills, jambs, corners, end walls, framed openings, rakes, fasciae, and parapet caps.

1. Basis-of-Design Product: Subject to compliance with requirements, provide ALUCOBOND® AXCENT™ manufactured by 3A Composites USA Inc., or comparable product by one of the following:
    a. Arconic Architectural Products.
    b. Mitsubishi Chemical Composites.

2. Aluminum Trim: Formed with minimum 0.040-inch (1.00-mm-) thick, coil-coated aluminum sheet unless otherwise indicated on the construction drawings.
3. Basis-of-design Finish: To match MCM wall panel system unless otherwise indicated on the construction drawings.

D. Panel Fasteners: Self-tapping screws designed to withstand design loads. Provide exposed fasteners with heads matching color of MCM panels by means of plastic caps or factory-applied coating. Provide EPDM or PVC sealing washers for exposed fasteners.

E. Panel Joint Sealants: ASTM C920; elastomeric polyurethane or silicone sealant; of type, grade, class, and use classifications required to seal joints in MCM panels and remain weathertight; and as recommended in writing by MCM panel manufacturer.

2.4 FABRICATION

A. General: Fabricate and finish MCM panels and accessories to fulfill indicated performance requirements demonstrated by laboratory testing. Comply with indicated profiles and dimensions on the construction drawings.

B. Sheet Metal Flashing and Trim: Fabricate flashing and trim to comply with manufacturer's recommendations or recommendations in SMACNA's "Architectural Sheet Metal Manual" that apply to design, dimensions, metal, and other characteristics of item indicated.

1. Form exposed sheet metal accessories that are without excessive oil canning, buckling, and tool marks and that are true to line and levels indicated, with exposed edges folded back to form hems.
2. Seams for Aluminum: Fabricate nonmoving seams with flat-lock seams. Form seams and seal with epoxy seam sealer. Rivet joints for additional strength.
3. Seams for Other Than Aluminum: Fabricate nonmoving seams in accessories with flat-lock seams. Tin edges to be seamed, form seams, and solder.
4. Sealed Joints: Form non-expansion, but movable, joints in metal to accommodate sealant and to comply with SMACNA standards.
5. Conceal fasteners and expansion provisions where possible. Exposed fasteners are not allowed on faces of accessories exposed to view.
6. Fabricate cleats and attachment devices from same material as accessory being anchored or from compatible, noncorrosive metal recommended in writing by metal panel manufacturer.
    a. Size: As recommended by SMACNA's "Architectural Sheet Metal Manual" or metal wall panel manufacturer for application but not less than thickness of metal being secured.

2.5 FINISHES

A. Protect mechanical and painted finishes on exposed surfaces from damage by applying a strippable, temporary protective covering before shipping.

B. Appearance of Finished Work: Variations in appearance of abutting or adjacent pieces provided by others is acceptable. Variation in appearance from different production batches of finish effects including but not limited to anodized, brushed coil, mica flake, metallic flake, and texture is expected.

C. Allowable finishes for Aluminum Panels and Accessories: See basis-of-design finish selection and warranty requirements. Prepare, pretreat, and apply coatings to exposed metal surfaces to comply with coating and resin manufacturers' written instructions.

1. Coil Coated Finishes
    a. FEVE Fluoropolymer: AAMA 2605. Containing 100 percent fluorinated ethylene vinyl ether resin in color coat.
    b. SDP Super-durable Polyester: AAMA 2605. Containing carboxyl or hydroxyl functional resin in the color coat.

c. SMP Siliconized Polyester: AAMA 2604. Containing silicone-modified, polyester-enamel in the color coat.

2. Anodized Finish

a. Clear Anodic Finish: AAMA 611, AA-M12C22A41, Class I, 0.018 mm or thicker.
b. Color Anodic Finish: AAMA 611, AA-M12C22A42/A44, Class I, 0.018 mm or thicker.

PART 3 - EXECUTION

3.1 EXAMINATION

A. Examine substrates, areas, and conditions, with Installer present, for compliance with requirements for installation tolerances, MCM panel supports, and other conditions affecting performance of the Work.

1. Examine wall framing to verify that girts, angles, channels, studs, and other structural panel support members and anchorage have been installed within alignment tolerances required by MCM wall panel manufacturer.
2. Examine wall sheathing to verify that sheathing joints are supported by framing or blocking and that installation is within flatness tolerances required by MCM wall panel manufacturer.
   a. Verify that air- or water-resistive barriers have been installed over sheathing or backing substrate to prevent air infiltration or water penetration.

B. Examine roughing-in for components and assemblies penetrating MCM panels to verify actual locations of penetrations relative to seam locations of MCM panels before installation.

C. Proceed with installation only after unsatisfactory conditions have been corrected.

3.2 PREPARATION

A. Miscellaneous Supports: Install sub framing, furring, and other miscellaneous panel support members and anchorages in accordance with ASTM C754 and MCM panel manufacturer's written recommendations.

3.3 MCM PANEL INSTALLATION

A. General: Install MCM panels in accordance with Fabricator's written instructions in orientation, sizes, and locations indicated on Drawings. Install panels perpendicular to supports unless otherwise indicated. Anchor MCM panels and other components of the Work securely in place, with provisions for thermal and structural movement.

1. Shim or otherwise plumb substrates receiving MCM panels.
2. Flash and seal MCM panels at perimeter of all openings. Fasten with self-tapping screws. Do not begin installation until air- or water-resistive barriers and flashings that will be concealed by MCM panels are installed.
3. Install screw fasteners in predrilled holes.

4. Locate and space fastenings in uniform vertical and horizontal alignment.
5. Install flashing and trim as MCM panel work proceeds.
6. Locate panel splices over, but not attached to, structural supports. Stagger panel splices and end laps to avoid a four-panel lap splice condition.
7. Align bottoms of MCM panels and fasten with blind rivets, bolts, or self-tapping screws. Fasten flashings and trim around openings and similar elements with self-tapping screws.
8. Provide weathertight escutcheons for pipe- and conduit-penetrating panels.

B. Fasteners:

1. Aluminum Panels: Use aluminum or stainless steel fasteners for surfaces exposed to the exterior; use aluminum or galvanized-steel fasteners for surfaces exposed to the interior.

C. Metal Protection: Where dissimilar metals contact each other or corrosive substrates, protect against galvanic action as recommended in writing by MCM panel manufacturer.

D. Attachment Assembly, General: Install attachment assembly required to support MCM wall panels to provide a complete weathertight wall system, including subgirts, perimeter flashing components, , and panel clips as indicated on the construction drawings.

E. Panel Installation: Attach MCM wall panels to supports at locations, spacings, and with fasteners recommended by Fabricator to achieve performance requirements specified.

F. Accessory Installation: Install accessories with positive anchorage to building and weathertight mounting, and provide for thermal expansion. Coordinate installation with flashings and other components.

1. Install components required for a complete MCM panel assembly including trim, copings, corners, seam covers, flashings, sealants, gaskets, fillers, closure strips, and similar items. Provide types indicated by MCM panel Fabricator; or, if not indicated, provide types recommended in writing by MCM system Fabricator.

G. Flashing and Trim: Comply with performance requirements, manufacturer's written installation instructions, or SMACNA's "Architectural Sheet Metal Manual." Provide concealed fasteners where possible, and set units true to line and level as indicated. Install work with laps, joints, and seams that are permanently watertight.

1. Install exposed flashing and trim that is without buckling and tool marks and that is true to line and levels indicated, with exposed edges folded back to form hems. Install sheet metal flashing and trim to fit substrates and to result in waterproof performance.
2. Expansion Provisions: Provide for thermal expansion of exposed flashing and trim. Space movement joints at a maximum of 10 feet (3 m) with no joints allowed within 24 inches (605 mm) of corner or intersection. Where lapped expansion provisions cannot be used or would not be sufficiently waterproof, form expansion joints of intermeshing hooked flanges, not less than 1 inch (25 mm) deep, filled with mastic sealant (concealed within joints).

3.4 ERECTION TOLERANCES

A. Substrate Tolerances: The General Contractor is responsible for providing a substrate with a tolerance of 1/4 inch in 20.0 feet (6mm in 6m), on level, plumb, and location control lines as indicated and within 1/8 inch (3mm) offset adjoining faces of alignment of matching profiles.

B. Field Measurements: Verify locations of wall framing members and wall opening dimensions by field measurements prior to the fabrication of the MCM system. Field measurements to be acquired once all substrate materials and adjacent materials are installed to use as-built data to submit “As Built Shop Drawings” with required adjustments to panel dimensions and layouts.

3.5 FIELD QUALITY CONTROL

A. Water-Spray Test: After installation, test area of assembly for water penetration in accordance with AAMA 501.2.

B. Fabricator's Field Service: Engage a factory-authorized service representative to test and inspect completed MCM wall panel installation, including accessories.

C. MCM wall panels will be considered defective if they do not pass test and inspections.

D. Additional tests and inspections, at Contractor's expense, are performed to determine compliance of replaced or additional work with specified requirements.

E. Prepare test and inspection reports.

3.6 CLEANING AND PROTECTION

A. Remove temporary protective coverings and strippable films, if any, as MCM panels are installed, unless otherwise indicated in manufacturer's written installation instructions. On completion of MCM panel installation, clean finished surfaces as recommended by MCM panel manufacturer. Maintain in a clean condition during construction.

B. After MCM panel installation, clear weep holes and drainage channels of obstructions, dirt, and sealant.

C. Replace MCM panels that have been damaged or have deteriorated beyond successful repair by finish touchup or similar minor repair procedures.

END OF SECTION 07 42 13

SECTION 07 53 23 - EPDM MEMBRANE ROOFING

PART 1 - GENERAL

1.1 SECTION INCLUDES

A. A roofing system incorporating a non-reinforced Ethylene-Propylene-Diene-Monomer (EPDM) membrane laminated to a non-woven fleece backing, fully adhered to a high-density cover board, polyisocyanurate insulation, vapor barrier, and roof substrate board over a metal roof deck.

B. Associated metal flashing.

C. Roof wood blocking, and roofing stack boots.

1.2 RELATED SECTIONS:

A. Section 06 10 00 – Rough Carpentry

B. Section 07 62 00 – Flashing and Sheet Metal

1.3 REFERENCES

A. Roofing Terminology: Refer to the following publications for definitions of roofing work related terms used in this Section:

1. ASTM C 1289 – Standard Specification for Faced Rigid Insulation.
2. ASTM D 1079 - Terminology Relating to Roofing and Waterproofing.
3. FM DS 1-28 – Design Wind Loads; Factory Mutual Research Corporation.
4. UL (RMSD) – Roofing Materials and Systems Directory; Underwriter’s Laboratories, Inc.
5. UL (FRD) – Fire Resistance Directory; Underwriter’s Laboratories, Inc.
6. Glossary of “The NRCA Roofing Manual" – National Roofing Contractors Association.
7. “Glossary of Roofing Terms” - Roof Consultants Institute.

B. Sheet Metal Terminology and Techniques: SMACNA “Architectural Sheet Metal Manual” - Sheet Metal and Air Conditioning Contractors’ National Association.

1.4 SUBMITTALS

A. Product Data: Manufacturer’s product data sheets for each product to be provided, including membrane materials, flashing materials, insulation and accessories.

B. Shop Drawings: Provide roofing system plans, elevations, sections, details, and details of attachment to other Work, including:

1. Base flashings, cants, and membrane terminations.
2. Setting plan for tapered insulation, including slopes.
3. Crickets, saddles, and tapered edge strips, including slopes.
4. Insulation fastening patterns.
5. Roof walkway layout.
6. Wood blocking fastening details.
7. Metal accessories including caps, copings and edge systems.
8. Conditions of interface with other materials.

C. Verification Samples: Provide for each product specified.

D. Factory Mutual Loss Prevention Data Bulletin 1-49 (wood nailer securement criteria).

E. Manufacturer's Installation Instructions: Indicate membrane seaming precautions, special procedures, and perimeter conditions requiring special attention.

F. Manufacturer's Certificate: Certify that products meet or exceed specified requirements.

G. Installer Certificates: Signed by roofing system manufacturer certifying that Installer is approved, authorized, or licensed by manufacturer to install roofing system.

H. Manufacturer's Field Reports: Indicate procedures followed, ambient temperatures, humidity, wind velocity during application, and supplementary instructions given.

I. Maintenance Data: Manufacturer's latest published documents on maintenance.

J. Warranty: Submit manufacturer warranty and ensure forms have been completed in Owner's name and registered with manufacturer.

1.5 QUALITY ASSURANCE

A. Perform work, including the installation of wood blocking and nailers, in accordance with Factory Mutual Loss Prevention Data and manufacturer's instructions.
   1. Maintain one copy of quality assurance instructions on site.

B. Manufacturer Qualifications: Company specializing in manufacturing the products specified in this section with minimum ten years of documented experience.

C. Applicator Qualifications: Company specializing in performing the work of this section with minimum five years of experience and approved, authorized, or licensed by roofing system manufacturer to install manufacturer's product and is eligible to receive the specified manufacturer's warranty.

D. Source Limitations: Obtain all components from the single source roofing system manufacturer issuing the warranty for the roofing system. All products used in the system shall be labeled by the single source roofing system manufacturer issuing the warranty.

1.6 DELIVERY, STORAGE, AND HANDLING

A. Deliver roofing materials in original containers with seals unbroken and labeled with manufacturer's name, product brand name and type, date of manufacture, and directions for storage.

B. Store products in a weather protected environment, clear of ground and moisture and within the temperature range required by roofing system manufacturer.

C. Protect roof insulation materials from physical damage, direct exposure to sunlight, and from deterioration by moisture, soiling, and other sources. Comply with insulation manufacturer's written instructions for handling, storing, and protecting during installation.

D. Handle and store roofing materials and place equipment in a manner to avoid permanent deflection of deck.

1.7 PROJECT CONDITIONS

A. Do not apply roofing membrane during unsuitable weather. Proceed with installation only when current and forecasted weather conditions permit roofing system to be installed in accordance with manufacturer's written instructions and warranty requirements.

B. Do not apply roofing membrane to damp or frozen deck surface or when precipitation is expected or occurring.

C. Do not expose materials vulnerable to water or sun damage in quantities greater than can be weatherproofed the same day.

1.8 WARRANTY

A. Provide twenty year manufacturer’s no dollar limit total system material and labor warranty to cover failure to prevent penetration of water. Include all roofing system components in warranty. Include roofing membrane and associated materials, insulation and accessories.

1. Single-Source special warranty includes roofing membrane, base flashings, roofing membrane accessories, roof insulation, fasteners, walkway products, manufacturer’s expansion joints, manufacturer’s edge metal products, and other single-source components of roofing system marketed by the manufacturer.

PART 2 - PRODUCTS

2.1 MANUFACTURERS

A. Fleece-backed EPDM Roofing Membrane:
1. Carlisle SynTec: www.carlislesyntec.com. No substitutions.

B. Insulation:
   1. Manufacturer approved by membrane manufacturer for specified total system warranty. No substitutions.

C. Copings and Drip Edges:
   1. Manufacturer approved by membrane manufacturer for specified total system warranty. No substitutions.

2.2 ROOFING

A. Fleece-backed EPDM Membrane Roofing: Carlisle Sure-White FleeceBACK 115 SPF Adhered Roofing System.

B. Roofing Assembly Requirements:
   1. Roof Covering External Fire-Resistance Classification: UL Class B.

C. Cover Board: Carlisle SecurShield HD Plus, 1/2 inch.

D. Polyisocyanurate Insulation: Carlisle Insulbase Polyisocyanurate.
   1. Minimum 2 layers of polyisocyanurate board.
   2. Bottom layer of polyisocyanurate board covered with single layer of polyisocyanurate board.
   3. Use 1/2 inch per foot taper at insulation crickets.
   4. Polyisocyanurate in compliance with ASTM C 1289 Type II, Class 1.

E. Vapor Barrier: Carlisle VapAir Seal™ 725TR Air and Vapor Barrier, adhered to the primed roof substrate board.

F. Primed Roof Substrate Board: DensDeck Prime 5/8 inch fiberglass mat-faced gypsum core board, primed with CCW 702 or CavGrip™ III Low VOC Primer.

2.3 ROOFING MEMBRANE AND ASSOCIATED AUXILIARY MATERIALS

A. As recommended by the roofing manufacturer, all to comply with Factory Mutual Classification requirements.
   1. Membrane: FleeceBACK 115 membrane incorporates a 60-mil thick Sure-White non-reinforced EPDM laminated to a 55-mil non-woven polyester fleece-backing resulting in a total finished sheet thickness of 115-mils. A selvage edge with Factory-Applied SecurTAPE is provided along the length of the membrane for splicing. Membrane conforms to ASTM Standard D 4637-96, Type III (Fabric-Backed membrane).
      a. Thickness over Fleece: 115 mil.
      b. Exposed Face Color: White
      c. Weight: .042 lbs/ft.

B. Auxiliary Materials, General: Auxiliary materials recommended by roofing system manufacturer for intended use and compatible with membrane roofing, and as shown in manufacturer's published details.

C. Seaming Materials: Manufacturer's recommended white or clear colored sealant used to seal cut edges of the fleece-backed EPDM membrane.

D. Sheet Flashing: Manufacturer's recommended sheet flashing membrane with same thickness and color as sheet membrane.

E. Bonding Adhesives: Manufacturer's standard solvent-based bonding adhesive for membrane, and solvent-based bonding adhesive for base flashings.

F. Tapes: Factory applied SecurTAPE in accordance with manufacturer's details.

G. Metal Termination Bars: Manufacturer's standard predrilled stainless-steel or aluminum bars, with anchors.

H. Walkway Pads: Manufacturer's 30" x 30" pads designed to protect the EPDM membrane in those areas exposed to repetitive foot traffic or other hazards.

I. Miscellaneous Accessories: Manufacturer's pre-fabricated pipe flashings and vent flashings, pourable sealer pockets, preformed inside and outside corner sheet flashings, curb flashings, cover strips, sealants, and other accessories.

2.4 INSULATION

A. General: Preformed roof insulation boards that comply with requirements and referenced standards, selected from manufacturer's standard sizes and of thicknesses indicated.
   1. Provide all wood blocking around perimeter to ensure proper installation of new insulation.

B. Polyisocyanurate Board Insulation: ASTM C 1289, Type II, Class 1.
   1. Minimum Compressive Strength: 25 pounds per square inch.
   2. Manufacturer: Carlisle Insulbase Polyisocyanurate, approved by membrane manufacturer for specified total roofing system warranty.

2.5 AUXILIARY ROOFING SYSTEM COMPONENTS

A. Coping System: Manufacturer's factory fabricated coping. Provide product manufactured and marketed by single-source membrane supplier that is included in specified total roofing system warranty.
   1. Aluminum coping cap with galvanized steel anchor cleats for capping any parapet wall. The system shall be watertight, maintenance free, and not require exposed fasteners. Joints shall be interlocking, concealed spline with continuous cleats.
      a. Basis of Design: Carlisle SecurEdge 200 Cantilever Coping.
      b. Color: To be determined.
      c. Material: .063 Aluminum.
         Size: As indicated on drawings.

B. Metal Drip Edge System: Manufacturer's factory fabricated metal drip edge system used to terminate the roof at the perimeter of the structure. Provide product manufactured and marketed by single-source membrane supplier that is included in specified total roofing system warranty.
   a. Basis of Design: SecurEdge 200 Drip Edge
   b. Color: To Be Determined.
   c. Material: .063 Aluminum.
   d. Size: As indicated on drawings.
   e. Provide fascia extenders where indicated on drawings, compatible with the metal fascia system.

C. Metal Flashing Sheet: Metal flashing sheet is specified in Section 07 62 00 - Sheet Metal Flashing and Trim.

2.6 ACCESSORIES

A. General: Roof insulation accessories recommended by insulation manufacturer for intended use and compatible with membrane roofing.

B. Wood Nailer Strips and Blocking: Only lumber which has been pressure treated with salt preservatives shall be used. Lumber treated with wood preservatives such as Creosote, Pentachlorophenol, Copper Naphthenate and Copper 8-quinolinolate will adversely affect the FleeceBACK membrane when in direct contact and are, therefore, unacceptable.

C. Roofing Nails: Galvanized, hot dipped type, size and configuration as required to suit application.

D. Sealants and Adhesives: As recommended by membrane manufacturer.

PART 3 - EXECUTION

3.1 EXAMINATION

A. Examine substrates, areas, and conditions for compliance with the requirements affecting performance of roofing system.
   1. General:
      a. Verify that surfaces and site conditions are ready to receive work.
      b. Verify that deck is supported and secure.
      c. Verify that deck is clean and smooth, flat, free of depressions, waves, or projections, properly sloped and suitable for installation of roof system.
      d. Verify that deck surfaces are dry and free of snow and ice.
      e. Verify that roof openings and penetrations are in place and set and braced and that roof drains are securely clamped in place.
         Verify that wood cants, blocking, curbs, and nailers are securely anchored to roof deck at penetrations and terminations and that nailers match thicknesses of insulation.
   2. Verify that deck is securely fastened with no projecting fasteners and with no adjacent units in excess of 1/16 inch (1.6 mm) out of plane relative to adjoining deck.

B. Unacceptable panels should be brought to the attention of the General Contractor and Project Owner's Representative and must be corrected prior to installation of roofing system.

C. Proceed with installation only after unsatisfactory conditions have been corrected.

3.2 PREPARATION

A. Clean and remove from substrate sharp projections, dust, debris, moisture, and other substances detrimental to roofing installation in accordance with roofing system manufacturer's written instructions.

B. Prevent materials from entering and clogging roof drains and conductors and from spilling or migrating onto surfaces of other construction.

C. Proceed with installation only after unsatisfactory conditions have been corrected.

3.3 ROOF SUBSTRATE BOARD INSTALLATION

A. Install 5/8 inch thick Carlisle supplied Dens-Deck fiberglass mat roof substrate board as a base layer in accordance with roofing system manufacturer's written installation instructions.

3.4 VAPOR RETARDER INSTALLATION

A. Install Carlisle supplied 725TR "peel and stick" rubberized asphalt membrane with compatible film coating so that it is fully adhered to the substrate, in accordance with roofing system manufacturer's written installation instructions.

3.5 INSULATION INSTALLATION

A. Coordinate installation of roof system components so insulation and cover board are not exposed to precipitation or left exposed at the end of the workday.

B. Comply with roofing system manufacturer's written instructions and Factory Mutual requirements for installation of roof insulation and cover board.

C. Place tapered insulation to the required slope pattern in accordance with manufacturer's instructions and approved layout shop drawings.

D. Install insulation boards with long joints in a continuous straight line with end joints staggered between rows, abutting edges and ends between boards. Lay boards with edges in moderate contact without forcing. Cut insulation to fit neatly to perimeter blocking and around penetrations through roof.

E. Install 2 or more layers with joints of each succeeding layer staggered from joints of previous layer a minimum of 6 inches (150 mm) in each direction.

F. At primary roof drains, use factory-tapered boards to slope down to roof drains over a distance of 18 inches.

G. At overflow roof drains, use constant thickness boards. Do not provide a slope down to the overflow roof drain.

H. Install tapered edge strips at perimeter edges of roof that do not terminate at vertical surfaces.

I. Adhered Insulation: Install each layer of insulation and cover board and adhere to substrate as follows:
   1. Install each layer in a urethane adhesive according to roofing system manufacturer's instructions.
   2. Install each layer to resist uplift pressure at corners, perimeter, and field of roof.

J. Proceed with installation only after unsatisfactory conditions have been corrected.

3.6 COVER BOARD INSTALLATION

A. Coordinate installing membrane roofing system components so cover board is not exposed to precipitation or left exposed at the end of the workday.

B. Comply with membrane roofing system manufacturer's written instructions for installing roof cover board.

C. Install cover board with long joints of cover board in a continuous straight line with end joints staggered between rows, abutting edges and ends between boards. Fill gaps exceeding 1/4 inch (6 mm) with cover board.
   1. Cut and fit cover board within 1/4 inch (6 mm) of nailers, projections, and penetrations.

D. Trim surface of cover board where necessary at roof drains so completed surface is flush and does not restrict flow of water.
   1. Install tapered edge strips at perimeter edges of roof that do not terminate at vertical surfaces.

E. Adhered Cover Board: Adhere cover board to substrate as follows:
   1. Install each layer in a urethane adhesive according to roofing system manufacturer's instruction.
   2. Install to resist uplift pressure at corners, perimeter, and field of roof.

F. Proceed with installation only after unsatisfactory conditions have been corrected.

3.7 ROOFING MEMBRANE INSTALLATION, GENERAL

A. Install roofing membrane in accordance with roofing system manufacturer's written instructions, applicable recommendations of the roofing manufacturer and requirements in this Section.

B. Start installation of roofing membrane in presence of roofing system manufacturer's technical personnel.

C. Cooperate with testing and inspecting agencies engaged or required to perform services for installing roofing system.

D. Coordinate installing roofing system so insulation and other components of the roofing membrane system not permanently exposed are not subjected to precipitation or left uncovered at the end of the workday or when rain is imminent.
   1. Provide tie-offs at end of each day's work to cover exposed roofing membrane sheets and insulation with joints and edges sealed.
   2. Complete terminations and base flashings and provide temporary seals to prevent water from entering completed sections of roofing system.
   3. Remove and discard temporary seals before beginning work on adjoining roofing.

E. Proceed with installation only after unsatisfactory conditions have been corrected.

3.8 ADHERED ROOFING MEMBRANE INSTALLATION

A. Install roofing membrane over area to receive roofing in accordance with membrane roofing system manufacturer's written instructions.
   1. Unroll roofing membrane and allow to relax before installing.
   2. Install sheet in accordance with roofing system manufacturer’s written instructions.

B. Accurately align roofing membrane and maintain uniform side and end laps of minimum dimensions required by manufacturer. Stagger end laps.

C. Bonding Adhesive: Apply water-based bonding adhesive to substrate at rate required by manufacturer and immediately install roofing membrane. Do not apply bonding adhesive to splice area of roofing membrane.

D. Apply roofing membrane with side laps shingled with slope of roof deck where possible.

E. Seams: Clean seam areas, overlap roofing membrane, and hot-air weld side and end laps of roofing membrane according to manufacturer's written instructions to ensure a watertight seam installation.
   1. Test lap edges with probe to verify seam weld continuity.
   2. Verify field strength of seams a minimum of twice daily and repair seam sample areas.
      a. Remove and repair any unsatisfactory sections before proceeding with Work.
   3. Repair tears, voids, and lapped seams in roofing membrane that do not meet requirements.

F. Spread sealant or mastic bed over deck drain flange at deck drains and securely seal roofing membrane in place with clamping ring.

G. Install roofing membrane and auxiliary materials to tie in to existing roofing.

H. Proceed with installation only after unsatisfactory conditions have been corrected.

3.9 BASE FLASHING INSTALLATION

A. Install sheet flashings and preformed flashing accessories and adhere to substrates in accordance with membrane roofing system manufacturer's written instructions.

B. Apply solvent-based bonding adhesive at required rate and allow to partially dry. Do not apply bonding adhesive to seam area of flashing.

C. Flash penetrations and field-formed inside and outside corners per manufacturer’s installation instructions.

D. Clean seam areas and overlap and firmly roll sheet flashings into the adhesive. Hot air weld side and end laps to ensure a watertight seam installation.

E. Terminate and seal top of sheet flashings and mechanically anchor to substrate through termination bars.

F. Proceed with installation only after unsatisfactory conditions have been corrected.

3.10 FIELD QUALITY CONTROL

A. Require the roofing material manufacturer’s technical representative to perform periodic on-site monitoring of the installation and submit written inspection reports.

B. Final Roof Inspection: Require the roofing material manufacturer’s technical representative to inspect roofing installation on completion and submit report to Architect.
   1. Notify Architect or Owner 48 hours in advance of date and time of final inspection.

C. Repair or remove and replace components of roofing system where test results or inspections indicate that they do not comply with specified requirements.

D. Additional testing and inspecting, at Contractor's expense, will be performed to determine compliance of replaced or additional work with specified requirements.

3.11 PROTECTION AND CLEANING

A. Protect roofing system from damage and wear during remainder of construction period. Where traffic must continue over finished roof membrane, protect surfaces using durable materials.

B. Correct deficiencies in or remove roofing system that does not comply with requirements, repair substrates, and repair or reinstall roofing system to a condition free of damage and deterioration at time of Substantial Completion and according to warranty requirements.

C. Remove markings from finished surfaces. Clean overspray and spillage from adjacent construction using cleaning agents and procedures recommended by manufacturer of affected construction.

END OF SECTION 07 54 23

SECTION 076200 - SHEET METAL FLASHING AND TRIM

PART 1 - GENERAL

1.1 SECTION INCLUDES

A. Fabricated sheet metal items, including counterflashings, downspouts, conductor heads, and scupper linings.

1.2 RELATED SECTIONS

A. Section 07 92 00 - Joint Sealers.

1.3 REFERENCES

A. ASTM A666 - Standard Specification for Annealed or Cold-Worked Austenitic Stainless Steel Sheet, Strip, Plate, and Flat Bar.

B. ASTM B32 – Standard Specification for Solder Metal.

C. ASTM B209 - Standard Specification for Aluminum and Aluminum-Alloy Sheet and Plate.

D. SMACNA 1793 - Architectural Sheet Metal Manual, 7th Edition.

1.4 SUBMITTALS

A. See Section 01 33 00 - Administrative Requirements, for submittal procedures.

B. Shop Drawings: Indicate material profile, jointing pattern, jointing details, fastening methods, flashings, terminations, and installation details.

1.5 QUALITY ASSURANCE

A. Perform work in accordance with SMACNA Architectural Sheet Metal Manual requirements and standard details, except as otherwise indicated.

B. Fabricator and Installer Qualifications: Company specializing in sheet metal work with 3 years of documented experience.

1.6 PRE-INSTALLATION CONFERENCE

A. Convene one week before starting work of this section.

1.7 DELIVERY, STORAGE, AND HANDLING

A. Stack material to prevent twisting, bending, and abrasion, and to provide ventilation. Slope metal sheets to ensure drainage.

B. Prevent contact with materials, which may cause discoloration or staining.

1.8 PROJECT CONDITIONS

A. Coordinate with the work of Section 07 27 00 - Fluid Applied Membrane Waterproofing.

B. Coordinate with the work of Section 07 53 23 – EPDM Roofing.

PART 2 - PRODUCTS

2.1 SHEET MATERIALS

A. Aluminum: ASTM B 209 (ASTM B 209M), 3005 alloy, H12 or H14 temper; 0.064 inch thick; millfinish.

B. Terne Coated Stainless Steel: 0.018 inch ASTM A 666 Type 304 core material with 0.092 lb/sqft terne alloy coating on both sides of core metal.

2.2 ACCESSORIES

A. Fasteners: Same material and finish as flashing metal.

B. Primer: Zinc chromate type.

C. Protective Backing Paint: Zinc molybdate alkyd.

D. Sealant: Type specified in Section 07900.

E. Plastic Cement: ASTM D 4586, Type I.

2.3 FABRICATION

A. Form sections true to shape, accurate in size, square, and free from distortion or defects.

B. Form pieces in longest possible lengths.

C. Hem exposed edges on underside 1/2 inch; miter and seam corners.

D. Form material with flat lock seams, except where otherwise indicated. At moving joints, usesealed lapped, bayonet-type or interlocking hooked seams.

E. Fabricate corners from one piece with minimum 18 inch long legs; seam for rigidity, seal withsealant.

F. Fabricate vertical faces with bottom edge formed outward 1/4 inch (6 mm) and hemmed to formdrip.

PART 3 - EXECUTION

3.1 PREPARATION

A. Back paint concealed metal surfaces with protective backing paint to a minimum dry filmthickness of 15 mil.

3.2 FLASHINGS

A. General

1. Fit flashings tight in place. Make corners square, surfaces true and straight in planes, and lines accurate to profiles.
2. Cap flashings shall be turned around exterior corners of masonry or concrete walls at least 2 inches, shall be secured into masonry joints and into concrete with expansion anchors and shall be sealed with No. 2 or 4 sealing compound. Corner units shall have mitered joints, shall be installed with 3 inch lap joint over flashings on each side. Unless otherwise indicated, through-wall flashing shall be terminated 13 mm 1/2 inch inside each exposed face of the wall. Cap flashings shall be provided over base flashings. Perforations in flashings made by masonry anchors shall be covered up by an application of bituminous plastic cement at the perforation. Exposed and unfastened flashings shall have the edge of the strip turned under 1/2 inch. Flashing shall be installed on top of joint reinforcement.

B. Through-Wall Flashing

1. Through-wall flashing includes sill and lintel flashing. The flashing shall be laid with a layer of mortar above and below the flashing so that the total thickness of the two layers of the mortar and flashing are the same thickness as the regular mortar joints. Flashing shall be one piece for lintels and sills.

3.3 REGLETS

A. Reglets shall be a factory fabricated product, complete with fittings and special shapes as may be required. Open-type reglets shall be filled with fiberboard or other suitable separator to prevent crushing of the slot during installation. Reglets shall be located not less than 8 inches nor more than 16 inches above roofing not having cant strips or shall be located not less than 5 inches nor more than 13 inches above cant strip. Reglet plugs shall be spaced not over 2 inches on center and reglet grooves shall be filled with sealant. Friction or slot-type reglets shall have metal flashings inserted the full depth of slot and shall be lightly punched every 12 inches to crimp the reglet and cap flashing together.

END OF SECTION 07 62 00

SECTION 07 72 33 - ROOF HATCHES

PART 1 - GENERAL

1.1 SECTION INCLUDES

A. Prefabricated roof hatches, with integral support curbs, operable hardware, and counterflashings.

B. Safety railings.

1.2 RELATED SECTIONS

A. Section 07 53 23 - EPDM Membrane Roofing: Roofing assembly.

1.3 SUBMITTALS

A. Product Data: Submit manufacturer's product data.

B. Shop Drawings: Submit shop drawings including unit construction, profiles, sizes, accessories, configuration, jointing methods and locations when applicable, adjacent construction interface, and attachment method.

C. Manufacturer's Installation Instructions: Indicate special installation criteria, interface with adjacent components.

D. Warranty: Submit executed copy of manufacturer's standard warranty.

1.4 QUALITY ASSURANCE

A. Manufacturer: A minimum of 5 years experience manufacturing similar products.

B. Installer: A minimum of 2 years experience installing similar products.

C. Manufacturer's Quality System: Registered to ISO 9001:2008 Quality Standards including in-house engineering for product design activities.

1.5 DELIVERY, STORAGE AND HANDLING

A. Deliver products in manufacturer's original packaging. Store materials in a dry, protected, well-vented area. Inspect product upon receipt and report damaged material immediately to delivering carrier and note such damage on the carrier's freight bill of lading.

1.6 WARRANTY

A. Manufacturer's Warranty: Provide manufacturer's standard warranty. Materials shall be free of defects in material and workmanship for a period of five years from the date of purchase. Should a part fail to function in normal use within this period, manufacturer shall furnish a new part at no charge.

PART 2 - PRODUCTS

2.1 MANUFACTURERS

A. Basis-of-Design Manufacturer: Type SEC Security Series Roof Hatch with Bil-Guard 2.0 RL2-NB hatch rail system by The Bilco Company, P.O. Box 1203, New Haven, CT 06505, 1-800-366-6530, Fax: 1-203-535-1582, Web: www.bilco.com.

B. Other Acceptable Manufacturers:
   1. Subject to compliance with requirements of the Basis-of-Design Product specified:
      a. Dur-Red Products: www.dur-red.com
      b. Milcor Inc.: www.milcorinc.com
      c. Substitutions: See Section 01 60 00 – Product Requirements.

2.2 ROOF HATCH

A. Furnish and install where indicated on plans metal, single leaf, roof hatch Type SEC Security Series, size width: 36" x length: 36". Length denotes hinge side. The roof hatch shall be single leaf. The roof hatch shall be pre-assembled from the manufacturer.

B. Performance characteristics:
   1. Cover shall be reinforced to support a minimum live load of 40 psf with a maximum deflection of 1/150th of the span or 20 psf wind uplift.
   2. Operation of the cover shall be smooth and easy with controlled operation throughout the entire arc of opening and closing.
   3. Operation of the cover shall not be affected by temperature.
   4. Entire hatch shall be weather tight with fully welded corner joints on cover and curb.

C. Cover: Shall be 3/16" aluminum with formed reinforcing members. Cover shall have a heavy extruded EPDM rubber gasket that is bonded to the cover interior to assure a continuous seal when compressed to the top surface of the curb. Cover shall be factory prepared to receive a security detention lock (manufacturer and model number to be as selected by Owner), supplied and installed by others in the field.

D. Cover insulation: Shall be fiberglass of 1" thickness, fully covered and protected by a metal liner of 18 gauge aluminum.

E. Curb: Shall be 12" in height and of 3/16" aluminum. The curb shall be formed with a 3-1/2" flange with 7/16" holes provided for securing to the roof deck. The curb shall be equipped with an integral metal capflashing of 11 ga. aluminum, fully welded at the corners, that features the Bil-Clip®

flashing system, including stamped tabs, 6” on center, to be bent inward to hold single ply roofing membrane securely in place.

F. Curb insulation: Shall be rigid, high-density fiberboard of 1” thickness on outside of curb.

G. Lifting mechanisms: Manufacturer shall provide compression spring operators enclosed in telescopic tubes to provide, smooth, easy, and controlled cover operation throughout the entire arc of opening and closing. The upper tube shall be the outer tube to prevent accumulation of moisture, grit, and debris inside the lower tube assembly. The lower tube shall interlock with a flanged support shoe welded to the curb assembly.

H. Hardware:
1. Heavy duty manganese bronze hinges shall be provided
2. Cover shall automatically lock in the open position with a rigid hold open arm equipped with a 1” diameter red vinyl grip handle to permit easy release for closing.
3. Type 316 stainless steel compression spring tubes. All hardware shall be zinc plated and chromate sealed.
4. Cover hardware shall be bolted into heavy gauge channel reinforcing welded to the underside of the cover and concealed within the insulation space.

I. Hatch Rail System:
1. Posts and rails: 1-1/4” Schedule 40 pipe in 6061 T6 aluminum alloy.
2. Curb mounting brackets and teardrop brackets: 6063 T5 aluminum extrusion.
3. Locking mechanism: Cast aluminum.
4. Spring hinges and fasteners: Type 316 stainless steel.
5. Finish: Safety yellow powder coat paint finish.

J. Finishes: Factory finish shall be mill finish aluminum.

2.3 FABRICATION

A. Fabricate components free of visual distortion or defects. Weld corners and joints.

B. Provide for removal of condensation occurring within components or assembly.

C. Fit components for weathertight assembly.

PART 3 - EXECUTION

3.1 EXAMINATION

A. Examine substrates and openings for compliance with requirements for installation tolerances and other conditions affecting performance. Proceed with installation only after unsatisfactory conditions have been corrected.

3.2 INSTALLATION

A. Install products in strict accordance with manufacturer's instructions and approved submittals. Locate units level, plumb, and in proper alignment with adjacent work.

B. Test units for proper function and adjust until proper operation is achieved.

C. Repair finishes damaged during installation.

D. Restore finishes so no evidence remains of corrective work.

E. Coordinate with roofing system and related flashings for weather tight installation.

F. Apply bituminous paint on surfaces of units in contact with cementitious materials or dissimilar materials.

G. Adjust safety railing and gate for smooth operation.

3.3 CLEANING

A. Clean exposed surfaces using methods acceptable to the manufacturer which will not damage finish.

END OF SECTION 07 72 33

SECTION 07 84 00 - FIRESTOPPING

PART 1 - GENERAL

1.1 SECTION INCLUDES

A. Firestopping voids at intersection of floor assemblies and exterior curtain wall assemblies, whether indicated on drawings or not.

B. Firestopping joints between fire rated partition assemblies and floor and roof assemblies, whether indicated on the drawings or not. Use UL System required for rated partition type indicated on the drawings.

C. Firestopping at all floor and wall penetrations, whether indicated on drawings or not.

1.2 RELATED SECTIONS

A. Refer to HVAC, electrical, plumbing, and fire protection specifications prepared by Omdex Incorporated Consulting Engineers for additional information.

1.3 REFERENCES

A. ASTM E119 – Standard Test Methods for Fire Tests of Building Construction and Materials.

B. ITS (DIR) – Directory of Listed Products; Intertek Testing Services NA, Inc.

C. FM P7825 – Approval Guide; Factory Mutual Research Corporation.

D. UL (FRD) – Fire Resistance Directory; Underwriters Laboratories Inc.

1.4 SUBMITTALS

A. See Section 01 33 00 – Administrative Requirements, for submittal procedures.

B. Schedule of Firestopping: List each condition and firestopping test or design number.

C. Product Data: Provide data on product characteristics, performance ratings and limitations.

D. Manufacturer’s Installation Instructions: Indicate preparation and installation instructions.

E. Manufacturer’s Certificate: Certify that products meet or exceed specified requirements.

F. Certificate from authority having jurisdiction indicating approval of materials used.

1.5 QUALITY ASSURANCE

A. Fire Testing: Provide firestopping assemblies of designs which provide the specified fire ratings when tested in accordance with methods indicated.
   1. Listing in the current classification or certification books of UL, FM, or ITS (Warnock Hersey) will be considered as constituting an acceptable test report.

2. Submission of actual test reports is required for assemblies for which none of the above substantiation exists.

B. Manufacturer's Qualifications: Company specializing in manufacturing the products specified in this section with minimum three years documented experience.

C. Installer Qualifications: Company specializing in performing the work of this section.

1.6 MOCK-UP

A. Install one firestopping assembly representative of each fire rating design required on project.
1. Where one design may be used for different penetrating items or in different wall constructions, install one assembly for each different combination.
2. Where firestopping is intended to fill a linear opening, install minimum of 1 linear ft.

B. Obtain approval of authority having jurisdiction before proceeding.

C. If accepted, mock-up will represent minimum standard for the Work.

D. If accepted, mock-up may remain as part of the Work. Remove and replace mock-ups not accepted.

1.7 ENVIRONMENTAL REQUIREMENTS

A. Comply with firestopping manufacturer's recommendations for temperature and conditions during and after installation. Maintain minimum temperature before, during, and for 3 days after installation of materials.

B. Provide ventilation in areas where solvent-cured materials are being installed.

PART 2 - PRODUCTS

2.1 FIRESTOPPING ASSEMBLIES

A. Firestopping: Any material meeting requirements.
1. Fire Resistive Joint Systems. Use any system listed by UL or tested in accordance with ASTM E 119 that has a fire rating equal to fire rating of fire rated assembly.

2.2 MATERIALS

A. Materials: Types required for tested assembly design.

B. Accessories: Type required for tested assembly design.

PART 3 - EXECUTION

3.1 EXAMINATION

A. Verify openings are ready to receive the work of this section.

3.2 PREPARATION

A. Clean substrate surfaces of dirt, dust, grease, oil, loose material, or other matter which may affect bond of firestopping material.

B. Remove incompatible materials which may affect bond.

C. Install backing materials to arrest liquid material leakage.

3.3 INSTALLATION

A. Install materials in manner described in fire test report and in accordance with manufacturer's instructions, completely closing openings.

B. Do not cover installed firestopping until inspected by authority having jurisdiction.

3.4 CLEANING AND PROTECTION

A. Clean adjacent surfaces of firestopping materials.

B. Protect adjacent surfaces from damage by material installation.

END OF SECTION 07 84 40

SECTION 07 92 00 - JOINT SEALERS

PART 1 - GENERAL

1.1 SECTION INCLUDES

A. Exterior and interior sealant and joint backing.

1.2 RELATED REQUIREMENTS

A. Section 07 84 00 - Firestopping: Firestopping sealants.

B. Section 08 80 00 - Glazing: Glazing sealants and accessories.

C. Division 22 - Plumbing: (By Omdex Incorporated Consulting Engineers) Firestopping sealants.

D. Division 23 – HVAC: (By Omdex Incorporated Consulting Engineers) Firestopping sealants.

E. Division 26 - Electrical: (By Omdex Incorporated Consulting Engineers) Firestopping sealants.

1.3 REFERENCE STANDARDS

A. ASTM C 834 - Standard Specification for Latex Sealants.

B. ASTM C 920 - Standard Specification for Elastomeric Joint Sealants.

C. ASTM C 1193 - Standard Guide for Use of Joint Sealants.

D. ASTM D 1667 - Standard Specification for Flexible Cellular Materials--Vinyl Chloride Polymers and Copolymers (Closed-Cell Foam).

1.4 SUBMITTALS

A. See Section 01 33 00 - Administrative Requirements, for submittal procedures.

B. Product Data: Provide data indicating sealer chemical characteristics, performance criteria, substrate preparation, limitations, and color availability.

C. Samples: Submit two samples, 1/4 x 2 inch in size illustrating sealer colors for selection.

D. Manufacturer's Installation Instructions: Indicate special procedures, surface preparation, and perimeter conditions requiring special attention.

1.5 QUALITY ASSURANCE

A. Maintain one copy of each referenced document covering installation requirements on site.

B. Manufacturer Qualifications: Company specializing in manufacturing the

Products specified in this section with minimum three years documented experience.

C. Applicator Qualifications: Company specializing in performing the work of this section with minimum three years experience.

1.6 ENVIRONMENTAL REQUIREMENTS

A. Maintain temperature and humidity recommended by the sealer manufacturer during and after installation.

1.7 COORDINATION

A. Coordinate the work with all sections referencing this section.

PART 2 - PRODUCTS

2.1 MANUFACTURERS

A. Polyurethane Sealant:
1. Bostik, Inc: www.bostik-us.com.
2. Pecora Corporation.; Product Dynatrol II: www.pecora.com.
3. Degussa Building Systems/Sonneborn: www.chemrex.com.
4. Tremco, Inc.; Product Dymeric 511: www.tremcosealants.com.
5. Euclid Chemical Company; www.euclidchemical.com
6. Substitutions: See Section 016000 - Product Requirements.

B. Butyl Sealants:
1. Bostik, Inc: www.bostik-us.com.
2. Pecora Corporation: www.pecora.com.
3. Tremco, Inc: www.tremcosealants.com.
4. Substitutions: See Section 01 60 00 - Product Requirements.

C. Acrylic Emulsion Latex Sealants:
1. Bostik, Inc: www.bostik-us.com.
2. Pecora Corporation: www.pecora.com.
3. Degussa Building Systems/Sonneborn: www.chemrex.com.
4. Tremco, Inc: www.tremcosealants.com.
5. Substitutions: See Section 01 60 00 - Product Requirements.

2.2 SEALERS

A. General Purpose Exterior Sealant: Polyurethane; ASTM C 920, Grade NS, Class 25, Uses NT, M, A and O; multi-component, capable of withstanding 50 percent movement in expansion and 50 percent movement in compression.
1. Colors: Colors as selected by Architect.
2. Applications: Use for:
a. Control, expansion, and soft joints in masonry and cut stone veneer.
b. Joints between cut stone veneer panels.
c. Joints between concrete and other materials.
d. Joints between metal frames and other materials.

e. Other interior joints for which no other type of sealant is indicated.

B. General Purpose Interior Sealant: Acrylic emulsion latex; ASTM C 834, Type OP, Grade NF single component, paintable.
1. Colors: Colors as selected.
2. Applications: Use for:
a. Interior control joints.
b. Joints between door and window frames and wall surfaces.
c. Other interior joints for which no other type of sealant is indicated.

C. Tile Sealant: White silicone; ASTM C 920, Uses I, M and A; single component, mildew resistant.
1. Colors: Colors as selected.
2. Applications: Use for:
a. Joints between plumbing fixtures and floor and wall surfaces.
b. Joints between toilet room countertops and wall surfaces.

D. Butyl Sealant: ASTM C 920, Grade NS, Class 12-1/2, Uses NT, M, A, G, O; single component, solvent release, non-skinning, non-sagging.
1. Color: Standard colors matching finished surfaces.
2. Applications: Use for:
a. Concealed sealant bead under exterior metal thresholds.

2.3 ACCESSORIES

A. Primer: Non-staining type, recommended by sealant manufacturer to suit application.

B. Joint Cleaner: Non-corrosive and non-staining type, recommended by sealant manufacturer; compatible with joint forming materials.

C. Joint Backing: Round foam rod compatible with sealant; oversized to percent larger than joint width.

D. Bond Breaker: Pressure sensitive tape recommended by sealant manufacturer to suit application.

PART 3 - EXECUTION

3.1 EXAMINATION

A. Verify that substrate surfaces and joint openings are ready to receive work.

B. Verify that joint backing and release tapes are compatible with sealant.

3.2 PREPARATION

A. Remove loose materials and foreign matter which might impair adhesion of sealant.

B. Clean and prime joints in accordance with manufacturer's instructions.

C. Perform preparation in accordance with manufacturer's instructions and ASTM C 1193.

D. Protect elements surrounding the work of this section from damage or disfigurement.

3.3 INSTALLATION

A. Perform work in accordance with sealant manufacturer's requirements for preparation of surfaces and material installation instructions.

B. Perform installation in accordance with ASTM C 1193.

C. Measure joint dimensions and size joint backers to achieve width-to-depth ratio, neck dimension, and surface bond area as recommended by manufacturer.

D. Install bond breaker where joint backing is not used.

E. Install sealant free of air pockets, foreign embedded matter, ridges, and sags.

F. Apply sealant within recommended application temperature ranges. Consult manufacturer when sealant cannot be applied within these temperature ranges.

G. Tool joints concave.

3.4 CLEANING

A. Clean adjacent soiled surfaces.

B. Clean weep holes free of sealant or other matter interfering with drainage.

3.5 PROTECTION

A. Protect sealants until cured.

END OF SECTION 07 92 00

SECTION 079513 – EXPANSION JOINT COVERS

PART 1 – GENERAL

1.1 RELATED DOCUMENTS

A. Drawings and general provisions of the Contract, including General Conditions, Supplementary Conditions and Division-1 General Requirements, apply to the work of this Section.

1.2 SUMMARY

A. This section includes the following:
   1. Interior Floor expansion joint covers.
   2. Interior Wall expansion joint covers.
   3. Interior Ceiling expansion joint covers.
   4. Exterior Floor expansion joint covers.
   5. Exterior Wall expansion joint covers.
   6. Roof expansion joint covers.
   7. Fire Rated Assemblies.

1.3 RELATED SECTIONS

A. Related work specified elsewhere includes:
   1. Section 03 30 00 – Cast–in–Place Concrete
   2. Section 04 20 00 – Reinforced Unit Masonry
   3. Section 07 92 00 – Joint Sealers
   4. Section 09 29 00 – Gypsum Board Assemblies
   5. Section 09 51 00 – Suspended Acoustical Ceilings
   6. Section 07 84 00 – Firestopping

1.4 REFERENCES

A. Publications listed herein are part of this specification to the extent referenced. The criteria established in the specifications shall take precedence over the standards referenced herein.

   1. American Society for Testing and Materials (ASTM):
      a. ASTM B221, Standard Specification for Aluminum and Aluminum-Alloy Extruded Bars, Rods, Wire, Shapes and Tubes.

1.5 SYSTEM DESCRIPTION

A. Joint covers shall permit unrestrained movement of joint without disengagement of cover.

B. Allowable load on floor joint cover plate shall be uniform load of 500 pounds concentrated for standard and 2,000 pounds concentrated load for heavy-duty systems

C. Centering Bars shall be fully engaged with the base members' tracks.

D. Fire rated joint covers shall have been tested by an independent, nationally recognized testing and listing entity in accordance with ASTM E1966 or UL 2079, where applicable at the full rated period. Covers shall be listed with an independent, nationally recognized testing and listing entity. Fire rating shall be not less than the fire rating of adjacent construction.

1.6 QUALITY ASSURANCE

A. Manufacturer:

1. Obtain interior joint cover assemblies through one source from a single manufacturer.
2. Obtain exterior joint cover assemblies through one source from a single manufacturer.

B. Installer: Firm with not less than three (3) years of successful experience in the installation of systems similar to those required by this project and acceptable to the manufacturer of the system.

1.7 SUBMITTALS

A. Submit manufacturer's specifications and technical data, including Material Safety

1. Product Data Sheets, installation instructions, and, as required, catalog cuts and templates to explain construction and to provide for incorporation of the product into the project. Data to clearly indicate movement capability of the cover assemblies and suitability of the material used in exterior for UV exposure.
2. Submit certificates, copies of independent test reports, or research reports showing compliance with fire resistance rating and other specified performance requirements.

B. Submit shop drawings showing complete fabrication details for all joint covers, including required anchorage to surrounding construction, recesses, blocking, backing and connections between similar and dissimilar joint cover assemblies.

1. Submit samples of each type of joint system indicated.

a. Include manufacturers color charts showing the standard range of colors and finishes available for each exposed metal and elastomeric seal material.

1.8 DELIVERY, STORAGE AND HANDLING

A. Provide temporary protective cover on finished surfaces.

B. Deliver joint covers in new, clean, unopened crates of sufficient size and strength to protect materials during transit.

C. Store components in original containers in a clean, dry location.

1.9 SEQUENCING

A. Submittals shall be completed and approved prior to award of subcontract for system components.

B. Subcontract for the work of this section shall be planned to allow sufficient time for manufacturer's production and delivery scheduling.

1.10 WARRANTY

A. Submit manufacturer's warranty that materials furnished will perform as specified for a period of not less than one (2) year when installed in accordance with manufacturer's recommendations.

PART 2 – PRODUCTS

2.1 ACCEPTABLE MANUFACTURERS

A. Interior Expansion Joint Covers: Construction Specialties, Construction Specialties, 3 Werner Way, Lebanon, NJ 08833. Tel. 800.233.8493. Email: cet@c-sgroup.com. Web: www.c-sgroup.com.

B. Exterior Expansion Joint Covers: Johns Manville, 717 17th St., Denver, CO 80202., Tel: 800-922-5922. Web: www.jm.com.

2.2 MATERIALS

A. Metals:

1. Aluminum: ASTM B 221, Alloy 6063-T5, 6063-T6, 6063-T52, 6061-T5, 6061-T6, 6061-T51, 6105-T5, 6105-T6, 6005-T5, 6005A-T5, 6005A-T61 for extrusions; ASTM B 209, Alloy 6061-T6, 3003-H14, 5005-H34 for sheet and plate.
   a. ASTM B221, alloy 6063-T6 for extrusions.
   b. ASTM B209, alloy 6063-T6 for plate.
   c. ASTM B209, alloy 5005-H34 for sheet.
2. Steel: ASTM A36 Plate
3. Stainless Steel: ASTM A666, type 304.
4. PVC Vinyl: Extruded flexible wall and ceiling joint cover.
5. Elastomeric seal: Preformed elastomeric membrane or extrusions to be installed in metal frames.
6. Compression Seals: ASTM D 2000 preformed rectangular elastomeric extrusions having internal baffle system and designed to function under compression.

B. Moisture Barrier: 7-ply reinforced Polyethylene sheet.

C. Fire Barrier: Any material or material combination, when fire tested after cycling, designated to resist the passage of flame and hot gases through a movement joint and to meet performance criteria for required rating period.

D. Fasteners, accessories and other materials required for complete installation in accordance with the manufacturer's installation instructions.

2.3 ARCHITECTURAL JOINT SYSTEMS, GENERAL

A. General: Provide architectural joint systems of design, basic profile, materials, and operation indicated. While specified joint systems establish the function and aesthetic intent, it may be necessary for the manufacturer to modify the joint systems to accommodate the movement requirements as scheduled in the contract documents. Such modifications should be made without significant changes to the aesthetic or functional intent of the joint systems. Provide units with capability to accommodate variations in adjacent surfaces.

B. Design architectural joint systems to accommodate the joint widths indicated on Drawings.

2.4 JOINT SYSTEMS FOR BUILDING INTERIORS

A. Construction Specialties, Inc., shall manufacture interior expansion joint cover assemblies specified herein and indicated on the drawings. Other manufacturers may be accepted as substitutions only if the manufacturer can demonstrate product compliance with the requirements of the contract documents. Substitution requests must be reviewed prior to bid and must include the following information:
   1. Details
   2. ASTM- E1399 test reports
   3. Mock-ups
   4. Reference list of projects with similar products as those specified herein.
   5. Sample of written 5 year warranty.

B. Floor-to-Floor Joint Systems:
   1. Construction Specialties, Inc. model RFD
   2. Type: Hinged Cover plate.
      a. Exposed Metal: Aluminum.
         1) Finish: Anodized.
   3. Cover Plate Design: Serrated/Striated.
   4. Attachment Method: Mechanical anchors.
   5. Load Capacity: Heavy duty.
   6. Fire-Resistance Rating: Provide joint system and fire-barrier assembly with a rating not less than that of adjacent construction.

C. Wall and Ceiling Joint Systems:
   1. Construction Specialties, Inc. model ASM
   2. Type: Snap-on cover.
      a. Exposed Metal: Aluminum.
         1) Finish: TBD from manufacturer's full range.
   3. Duroflex Gasket: Single Durometer – 80 Shore A, ASTM D2000; gray color.
   4. Fire-Resistance Rating: Provide joint system and fire-barrier assembly with a rating not less than that of adjacent construction.
   5. Tamper resistant: no exposed fasteners.

2.5 JOINT SYSTEMS FOR BUILDING INTERIORS

A. Johns Manville, Inc., shall manufacture exterior expansion joint cover assemblies specified herein and indicated on the drawings. Other manufacturers may be accepted as substitutions only if the manufacturer can demonstrate product compliance with the requirements of the contract documents. Substitution requests must be reviewed prior to bid and must include the following information:

1. Details
2. Test reports
3. Mock-ups
4. Reference list of projects with similar products as those specified herein.
5. Sample of written 5 year warranty.

B. Vertical Expansion Joint Cover:
1. Johns Manville “Expand-O-Gard” Style WS
2. Bellow Material: EPDM – Black.
3. Bellow Width: As indicated on Drawings.
4. Flange Metal: 0.032” Aluminum.

C. Roof Expansion Joint Cover:
1. Johns Manville “Expand-O-Flash” Style CF/EJ
2. Bellow Material: EPDM – Black.
3. Bellow Width: As indicated on Drawings.
4. Flange Metal: 0.032” Aluminum.

2.6 FINISHES

A. Protect mechanical finishes on exposed surfaces from damage by applying a strippable, temporary protective covering before shipping.

B. Appearance of Finished Work: Noticeable variations in same piece are not acceptable.

PART 3 – EXECUTION

3.1 EXAMINATION

A. Verify that field measurements and blockout dimensions are as shown on shop drawings prior to releasing materials for fabrication by the manufacturer.

B. Installer shall examine conditions under which work is to be performed and shall notify the contractor in writing of unsatisfactory conditions. Installer shall not proceed until unsatisfactory conditions have been corrected in a manner acceptable to the installer.

3.2 PREPARATION

A. Prepare substrates according to architectural joint system manufacturer's written instructions.

B. Repair concrete slabs and blockouts using manufacturer's recommended repair grout of compressive strength adequate for anticipated structural loadings.

C. Coordinate and furnish anchorages, setting drawings, and instructions for installing joint systems. Provide fasteners of metal, type, and size to suit type of construction indicated and to provide for secure attachment of joint systems.

D. Cast-In Frames: Coordinate and furnish frames to be cast into concrete.

3.3 INSTALLATION

A. Comply with manufacturer's written instructions for storing, handling, and installing architectural joint assemblies and materials unless more stringent requirements are indicated.

B. Metal Frames: Perform cutting, drilling, and fitting required to install joint systems.
   1. Install in true alignment and proper relationship to joints and adjoining finished surfaces measured from established lines and levels.
   2. Adjust for differences between actual structural gap and nominal design gap due to ambient temperature at time of installation. Notify Architect where discrepancies occur that will affect proper joint installation and performance.
   3. Cut and fit ends to accommodate thermal expansion and contraction of metal without buckling of frames.
   4. Locate in continuous contact with adjacent surfaces.
   5. Standard-Duty Systems: Shim to level where required. Support underside of frames continuously to prevent vertical deflection when in service.
   6. Heavy-Duty Systems: Repair or grout blockout as required for continuous frame support and to bring frame to proper level. Shimming is not allowed.
   7. Locate anchors at interval recommended by manufacturer, but not less than 3 inches from each end and not more than 24 inches.

C. Seals in Metal Frames: Install elastomeric seals and membranes in frames to comply with manufacturer's written instructions. Install with minimum number of end joints.
   1. Provide in continuous lengths for straight sections.
   2. Seal transitions according to manufacturer's written instructions. Vulcanize or heat-weld field-spliced joints as recommended by manufacturer.
   3. Installation: Mechanically lock seals into frames or adhere to frames with adhesive or pressure-sensitive tape as recommended by manufacturer.

D. Compression Seals: Apply adhesive or lubricant adhesive as recommended by manufacturer before installing compression seals.

E. Terminate exposed ends of joint assemblies with field- or factory-fabricated termination devices.

F. Fire-Resistance-Rated Assemblies: Coordinate installation of architectural joint assembly materials and associated work so complete assemblies comply with assembly performance requirements.
   1. Fire Barriers: Install fire barriers to provide continuous, uninterrupted fire resistance throughout length of joint, including transitions and field splices.

END OF SECTION 07 95 13

08 11 13 – HOLLOW METAL DOORS AND FRAMES

PART 1 - GENERAL

1.1 SECTION INCLUDES

A. Fire-rated and non-fire-rated steel doors.

B. Fire-rated and non-fire-rated steel frames for steel doors.

C. Thermally insulated exterior steel doors.

D. Steel glazing frames.

E. Accessories, including glazing and louvers.

1.2 RELATED SECTIONS

A. Section 08 71 00 – Door Hardware: Door hardware including silencers.

B. Section 08 80 00 – Glazing: Glass for doors and borrowed lites.

C. Section 08 88 16 – Fire-Rated Glazing: Glass for fire-rated doors and borrowed lites.

1.3 REFERENCES

A. ANSI/ICC A117.1 - American National Standard for Accessible and Usable Buildings and Facilities; International Code Council.

B. ANSI A250.8 - SDI-100 Recommended Specifications for Standard Steel Doors and Frames.

C. ANSI A250.10 - Test Procedure and Acceptance Criteria for Prime Painted Steel Surfaces for Steel Doors and Frames.

D. ASTM C 236 – Standard Test Method for Steady-State Thermal Performance of Building Assemblies by Means of a Guarded Hot Box.

E. ASTM C 1363 - Standard Test Method for Thermal Performance of Building Assemblies by Means of a Hot Box Apparatus.

F. DHI A115 Series - Specifications for Steel Doors and Frame Preparation for Hardware; Door and Hardware Institute (ANSI/DHI A115 Series).

G. NAAMM HMMA 840 – Guide Specifications for Installation and Storage of Hollow Metal Doors and Frames; The National Association of Architectural Metal Manufacturers.

H. NFPA 80 – Standard for Fire Doors and Fire Windows; National Fire Protection Association.

I. NFPA 252 – Standard Methods of Fire Tests of Door Assemblies; National Fire Protection Association.

J. UL (BMD) - Building Materials Directory; Underwriters Laboratories Inc.

1.4 SUBMITTALS

A. See Section 01 30 00 - Submittals for submittal procedures.

B. Product Data: Materials and details of design and construction, hardware locations, reinforcement type and locations, anchorage and fastening methods, and finishes; and one copy of referenced grade standard.

C. Shop Drawings: Details of each opening, showing elevations, glazing, frame profiles, and identifying location of different finishes, if any.

D. Installation Instructions: Manufacturer's published instructions, including any special installation instructions relating to this project.

E. Manufacturer's Certificate: Certification that products meet or exceed specified requirements.

1.5 QUALITY ASSURANCE

A. Manufacturer: Company specializing in manufacturing the products specified in this section with minimum three years documented experience.

B. Maintain at the project site a copy of all reference standards dealing with installation.

1.6 DELIVERY, STORAGE, AND PROTECTION

A. Store in accordance with NAAMM HMMA 840.

B. Protect with resilient packaging; avoid humidity build-up under coverings; prevent corrosion.

PART 2 - PRODUCTS

2.1 MANUFACTURERS

A. Steel Doors and Frames:
1. Ceco Door Products: www.cecodoor.com.
2. Republic Builders Products: www.republicdoor.com.
3. Steelcraft: www.steelcraft.com.
4. Substitutions: See Section 01 60 00 - Product Requirements.

2.2 DOORS AND FRAMES

A. Requirements for All Doors and Frames:
1. Accessibility: Comply with ANSI/ICC A117.1.
2. Door Top Closures: Flush with top of faces and edges.
3. Door Edge Profile: Beveled on both edges.
4. Door Texture: Smooth faces.
5. Glazed Lights: Non-removable stops on non-secure side; sizes and configurations as indicated on drawings.
6. Hardware Preparation: In accordance with DHI A115 Series, with reinforcement welded in

place, in addition to other requirements specified in door grade standard.

7. Galvanizing for exterior doors and frames: All components hot-dipped zinc-iron alloy-coated (galvannealed), A60/ZF180.
8. Finish: Factory primed, for field finishing.

B. Combined Requirements: If a particular door and frame unit is indicated to comply with more than one type of requirement, comply with all the specified requirements for each type; for instance, an exterior door that is also indicated as being sound-rated must comply with the requirements specified for exterior doors and for sound-rated doors; where two requirements conflict, comply with the most stringent.

2.3 STEEL DOORS

A. Interior Doors, Non-Fire-Rated:
1. Grade: ANSI A250.8 Level 3, physical performance Level A, Model 2, seamless, 16 gage.
2. Core: Steel channel grid.

B. Interior Doors, Fire-Rated:
1. Grade: ANSI A250.8 Level 3, physical performance Level A, Model 2, seamless, 16 gage.
2. Core: Mineral fiberboard.

C. Exterior Doors, Non-Fire-Rated:
1. Grade: ANSI A250.8 Level 3, physical performance Level A, Model 2, seamless, 16 gage.
2. Core: Polyurethane.
3. Insulating Value: U-value of 0.370, when tested in accordance with ASTM C 1363 or ASTM C 236.
4. Weatherstripping: Separate, see Section 08 71 00.

D. Fire Rating: As indicated on Door and Frame Schedule, with temperature rise ratings as required by code, tested in accordance with NFPA 252.
1. Provide units listed and labeled by UL.
2. Attach fire rating label to each fire rated unit.

2.4 STEEL FRAMES

A. General:
1. Comply with the requirements of grade specified for corresponding door, except:
   a. ANSI A250.8 Level 3 Doors: 14 gage frames (exterior); 16 gage frames (interior).
2. Provide mortar guard boxes for hardware cut-outs in frames to be installed in masonry or to be grouted.
3. All frames: Fully welded.
4. Fire-rated frames: Same as door, labeled.
5. Frames wider than 48 inches: Reinforce with steel channel fitted tightly into frame head, flush with top.
6. Frames installed back-to-back: Reinforce with steel channels anchored to floor and overhead structure.

7. Weatherstripping: Separate, see Section 08710.

B. Frames for Interior Glazing or Borrowed Lights: Construction and face dimensions to match door frames, and as indicated on drawings.

2.5 ACCESSORY MATERIALS

A. Glazing in non-fire-rated doors: As specified in Section 08 80 00.

B. Glazing in fire-rated doors: As specified in Section 08 88 16.

C. Removable Stops: Formed sheet steel, shape as indicated on drawings, mitered or butted corners; prepared for countersink style tamper proof screws.

D. Astragals for Double Doors:
1. Exterior Doors: Steel, Z-shaped.
2. Fire-Rated Doors: Steel, shape as required to accomplish fire rating.

E. Grout for Frames: Portland cement grout of maximum 4-inch slump for hand troweling; thinner pumpable grout is prohibited.

F. Temporary Frame Spreaders: Provide for all factory- or shop-assembled frames.

2.6 FINISH MATERIALS

A. Primer: Rust-inhibiting, complying with ANSI A250.10, door manufacturer's standard.

B. Bituminous Coating: Asphalt emulsion or other high-build, water-resistant, resilient coating.

PART 3 – EXECUTION

3.1 EXAMINATION

A. Verify existing conditions before starting work.

B. Verify that opening sizes and tolerances are acceptable.

3.2 PREPARATION

A. Coat inside of frames to be installed in masonry or to be grouted, with bituminous coating, prior to installation.

3.3 INSTALLATION

A. Install in accordance with the requirements of the specified door grade standard.

B. In addition, install fire rated units in accordance with NFPA 80.

C. Coordinate frame anchor placement with wall construction.

D. Grout frames in masonry construction, using hand trowel methods; brace frames so that pressure of grout before setting will not deform frames.

E. Coordinate installation of hardware.

F. Coordinate installation of glazing.

G. Coordinate locations of louvers with mechanical drawings by others, whether shown or not shown on the architectural drawings.

H. Coordinate installation of electrical and security connections to electrical and security hardware items.

3.4 ERECTION TOLERANCES

A. Clearances Between Door and Frame: As specified in ANSI A250.8.

B. Maximum Diagonal Distortion: 1/16 in measured with straight edge, corner to corner.

3.5 ADJUSTING

A. Adjust for smooth and balanced door movement.

3.6 SCHEDULE – See Drawings.

END OF SECTION 08 11 16

SECTION 08 14 16 - FLUSH WOOD DOORS

PART 1 – GENERAL

1.1 SECTION INCLUDES

A. Flush wood doors.

1.2 RELATED REQUIREMENTS

A. Section 08 11 13 – Hollow Metal Doors and Frames.

B. Section 08 71 00 – Door Hardware.

C. Section 09 00 00 – Interior Color and Material Specifications.

1.3 REFERENCE STANDARDS

A. AWI/AWMAC (QSI) - Architectural Woodwork Quality Standards Illustrated; Architectural Woodwork Institute and Architectural Woodwork Manufacturers Association of Canada.

B. ICC (IBC) - International Building Code.

C. ITS (DIR) - Directory of Listed Products; Intertek Testing Services NA, Inc.

D. NFPA 80 - Standard for Fire Doors and Fire Windows; National Fire Protection Association.

E. UL (BMD) - Building Materials Directory; Underwriters Laboratories Inc.

1.4 SUBMITTALS

A. See Section 01 33 00 - Administrative Requirements for submittal procedures.

B. Product Data: Indicate door core materials and construction; veneer species, type and characteristics.

C. Shop Drawings: Illustrate door opening criteria, elevations, sizes, types, swings, undercuts required, special beveling, special blocking for hardware, factory machining criteria, factory finishing criteria, identify cutouts for glazing.

D. Samples: Submit two samples of door construction, cut from top corner of door.

E. Samples: Submit two samples of door veneer, illustrating wood grain, stain color, and sheen.

F. Manufacturer's Installation Instructions: Indicate special installation instructions.

1.5 QUALITY ASSURANCE

A. Maintain one copy of the specified door quality standard on site for review during installation and finishing.

B. Manufacturer: Company specializing in manufacturing the products specified in this section with minimum 5 years of experience.

C. Installed Fire Rated Door Assembly: Conform to NFPA 80 for fire rated class as indicated.

1.6 DELIVERY, STORAGE, AND HANDLING

A. Package, deliver and store doors in accordance with specified quality standard.

B. Accept doors on site in manufacturer's packaging. Inspect for damage.

C. Protect doors with resilient packaging sealed with heat shrunk plastic. Do not store in damp or wet areas; or in areas where sunlight might bleach veneer. Seal top and bottom edges if stored more than one week. Break seal on site to permit ventilation.

1.7 PROJECT CONDITIONS

A. Coordinate the work with door opening construction, door frame and door hardware installation.

PART 2 – PRODUCTS

2.1 MANUFACTURERS

A. Veneer Doors:
1. VT Industries: www.vtindustries.com.
2. Southwood Door Company: www.southwooddoors.com.
3. Marshfield Door Systems, Inc: www.marshfielddoors.com.
4. Substitutions: See Section 01 60 00 - Product Requirements.

2.2 DOORS

A. All Doors: See drawings for locations and additional requirements.
1. Quality Standard: AWI/AWMAC Architectural Woodwork Quality Standards Illustrated, Section 1300.
2. Wood Veneer Faced Doors: 5-ply unless otherwise indicated.

B. Interior Doors: 1-3/4 inches thick unless otherwise indicated; flush construction.
1. Provide solid core doors at all locations.
2. Fire Rated Doors: Tested to ratings indicated on drawings in accordance with International Building Code ("positive pressure"); UL or WH (ITS) labeled without any visible seals when door is open.
3. Wood veneer facing with Custom Stained Factory Finish as specified in Section 09 00 00 Interior Color and Material Specifications.

2.3 DOOR CORES

A. Non-Rated Solid Core Doors: Type, plies and faces as indicated above.

B. Fire Rated Doors: Mineral core, Type FD, plies and faces as indicated above.

2.4 DOOR FACINGS

A. Wood Veneer Facing for Custom Stained, Factory Finish: Species as indicated on Color and Material Specification Section 09 00 00, veneer grade as specified by quality standard, cut as indicated on drawings, book veneer match, running assembly match; unless otherwise indicated.
1. Vertical Edges: Same species as face veneer.

2. Pairs: Pair match each pair; set match pairs within 10 feet of each other when doors are closed.

B. Facing Adhesive: Type II - water resistant.

2.5 DOOR CONSTRUCTION

A. Fabricate doors in accordance with door quality standard specified.

B. Cores Constructed with Stiles and Rails, except at basement storage doors noted on drawings to be field cut to size. Such doors are to be solid core.

C. Provide solid blocks at lock edge and top of door for closer for hardware reinforcement.
1. Provide solid blocking for other through bolted hardware.

D. Vertical Exposed Edge of Stiles - Veneer Faces: Of same species as veneer facing.

E. Fit door edge trim to edge of stiles after applying veneer facing.

F. Factory machine doors for hardware other than surface-mounted hardware, in accordance with hardware requirements and dimensions.

G. Factory fit doors for frame opening dimensions identified on shop drawings.
1. Exception: Doors to be field finished.

H. Provide edge clearances in accordance with AWI Quality Standards Illustrated Section 1700.

PART 3 – EXECUTION

3.1 EXAMINATION

A. Verify existing conditions before starting work.

B. Verify that opening sizes and tolerances are acceptable.

C. Do not install doors in frame openings that are not plumb or are out-of-tolerance for size or alignment.

3.2 INSTALLATION

A. Install doors in accordance with manufacturer's instructions and specified quality standard.

B. Use machine tools to cut or drill for hardware.

C. Coordinate installation of doors with installation of frames and hardware.

D. Install door louvers plumb and level.

3.3 INSTALLATION TOLERANCES

A. Conform to specified quality standard for fit and clearance tolerances.

B. Conform to specified quality standard for maximum diagonal distortion.

3.4 ADJUSTING

A. Adjust doors for smooth and balanced door movement.

B. Adjust closers for full closure.

3.5 SCHEDULE - See Drawings.

END OF SECTION 08 14 16

SECTION 08 41 13 – ALUMINUM-FRAMED ENTRANCE DOORS

PART 1 - GENERAL

1.1 SECTION INCLUDES

A. Aluminum-framed entrance doors with 1” clear Low-E insulated tempered safety glazing, associated door hardware, and components.

1. Door Type: Kawneer 350 Swing Door.
   a. Medium stile, with 10” high bottom rail.
   b. Vertical face dimension: 3-1/2" (88.9 mm)
   c. Depth: 1-3/4" (44.5 mm)
2. Frame Type:
   a. Aluminum-framed entrance doors located within a curtainwall shall have a Kawneer aluminum frame system integral with the curtainwall system specified in Section 08 44 13.
   b. Aluminum-framed entrance doors not associated with a curtainwall system shall have a Kawneer Trifab VG 451T aluminum frame.

1.2 RELATED SECTIONS

A. Section 07 92 00 – Joint Sealers.

B. Section 08 44 13 – Glazed Aluminum Curtain Walls.

C. Section 08 71 00 – Door Hardware.

D. Section 08 80 00 – Glazing.

1.3 DEFINITIONS

A. For fenestration industry standard terminology and definitions, refer to the Fenestration & Glazing Industry Alliance (FGIA) Glossary (AAMA AG-13).

1.4 PERFORMANCE REQUIREMENTS

A. General Performance:
   1. Aluminum-framed entrance system shall withstand the effects of the following performance requirements without failure due to defective manufacture, fabrication, installation, or other defects in construction.

B. The entrance system shall include anchorage that is capable of withstanding the following load requirements without damage or permanent set:
   1. Design Wind Loads: Provide aluminum-framed entrance door system; include anchorage, capable of withstanding wind load design pressures based on ASCE 7-16 per the 2020 Building Code of New York State; 30 psf (service load). Wind speed 113 mph; Risk Category II; Wind Exposure Category B.

C. Air Leakage:
   1. For single-acting offset pivot or butt-hung entrances in the closed and locked position, the test specimen shall be tested in accordance with ASTM E 283 at a pressure differential of 1.57 psf (75 Pa) for single doors and pairs of doors.
   2. A single 3'0" x 7'0" (915 mm x 2134 mm) entrance door and frame shall not exceed 1.0 cfm/ft2.
   3. A pair of 6'0" x 7'0" (1830 mm x 2134 mm) entrance doors and frame shall not exceed 1.0 cfm/ft2.

D. Structural Test Performance:
   1. Corner strength shall be tested per the Kawneer dual moment load test procedure and certified by an independent testing laboratory to ensure weld compliance and corner integrity.

1.5 SUBMITTALS

A. See Section 01 33 00 - Administrative Requirements, for submittal procedures.

B. Product Data:
   1. For each type of aluminum-framed entrance door indicated, include:
      a. Construction details
      b. Material descriptions
      c. Fabrication methods
      d. Dimensions of individual components and profiles
      e. Hardware
      f. Finishes
      g. Installation instructions

C. Shop Drawings: Provide drawings and calculations signed and sealed by a Professional Engineer licensed in the State in which the project is located. Indicate system dimensions, framed opening requirements and tolerances, operational clearances, attachments to other work, plans, sections, elevations, details, and hardware.

D. Samples: Submit two samples 12 x 12 inches in size illustrating finished aluminum surface, glazing, glazing materials.

E. Test Reports: Submit test reports for each type of aluminum-framed entrance door used in the project. Test reports must be based on evaluation of comprehensive tests performed by a qualified preconstruction testing agency, and must indicate compliance with performance requirements.

F. Entrance Door Hardware Schedule:
   1. Schedule shall be prepared by or under the supervision of supplier.
   2. Schedule shall detail fabrication and assembly of entrance door hardware, including procedures and diagrams.
   3. Coordinate final entrance door hardware schedule with doors, frames, and related work to ensure proper size, thickness, hand, function, and finish of entrance door hardware.

G. Warranty: Submit manufacturer warranty and ensure forms have been completed in Owner's name and registered with manufacturer.

1.6 QUALITY ASSURANCE

A. Manufacturer and Installer: Company specializing in aluminum glazing systems with minimum five years of documented experience.

B. Source Limitations: Obtain aluminum-framed entrance doors through one source from a single manufacturer.

1.7 PRE-INSTALLATION MEETING

A. Convene one week before starting work of this section.

1.8 DELIVERY, STORAGE, AND PROTECTION

A. Protect finished aluminum surfaces with wrapping. Do not use adhesive papers or sprayed coatings which bond to aluminum when exposed to sunlight or weather.

1.9 PROJECT CONDITIONS

A. Coordinate the work with the installation of work of related sections specified above.

1.10 ENVIRONMENTAL REQUIREMENTS

A. Do not install sealants when ambient temperature is less than 40 degrees F. Maintain this minimum temperature during and 48 hours after installation.

1.11 WARRANTY

A. See Section 01 77 00 - Closeout Submittals, for additional warranty requirements.

B. Correct defective Work within a five year period after Date of Substantial Completion.

C. Provide five year manufacturer warranty against failure of glass seal on insulating glass units, including interpane dusting or misting. Include provision for replacement of failed units.

D. Provide ten year manufacturer warranty against excessive degradation of exterior finish. Include provision for replacement of units with excessive fading, chalking, or flaking.

PART 2 – PRODUCTS

2.1 MANUFACTURERS

A. Basis-of-Design Product:

1. Kawneer Company, Inc. www.kawneer.com
   a. 350 Medium-Stile Swing Door:
      1) Vertical face dimension: 3-1/2" (88.9 mm)
      2) Top Rail: 3-1/2" (88.9 mm)
      3) Bottom Rail: 10" (254.0 mm)
2. Major portions of the door members shall be 0.125" (3.2 mm) nominal thickness.
3. Glazing molding shall be 0.05" (1.3 mm) thick.
4. Glazing gaskets shall be either EPDM elastomeric extrusions or a thermoplastic elastomer.
5. Provide adjustable glass jacks to help center the glass in the door opening.

2.2 MATERIALS

A. Aluminum Extrusions:

1. Alloy and temper recommended by aluminum-framed entrance door manufacturer for strength, corrosion resistance, and application of required finish.
2. Not less than 0.090" (2.3 mm) wall thickness at any location for the main frame and door leaf members.

B. Fasteners:

1. Aluminum, nonmagnetic stainless steel or other materials must be non-corrosive and compatible with aluminum members, trim hardware, anchors, and other components.

C. Anchors, Clips, and Accessories:

1. Aluminum, nonmagnetic stainless steel, or zinc-coated steel or iron complying with ASTM B 633 for SC 3 severe service conditions or other suitable zinc coating.
2. Anchors, clips, and accessories shall provide sufficient strength to withstand the design pressure indicated.

D. Reinforcing Members:

1. Aluminum, nonmagnetic stainless steel, or nickel/chrome-plated steel complying with ASTM B 456 for Type SC 3 severe service conditions, or zinc-coated steel or iron complying with ASTM B 633 for SC 3 severe service conditions or other suitable zinc coating.
2. Reinforcing members must provide sufficient strength to withstand the design pressure indicated.

E. Weather Seals:

1. Provide weather stripping with integral barrier fin or fins of semi-rigid, polypropylene sheet or polypropylene-coated material.
2. Comply with AAMA 701/702.

2.4 FINISHES

A. Finish designations prefixed by AA comply with the system established by the Aluminum Association for designating aluminum finishes.

B. Factory Finishing:

1. Aluminum Exterior Surfaces (Typical): Kawneer Permanodic™ AA-M10C21A41/ AA-M45C22A41, AAMA 611, Architectural Class I Clear Anodic Coating (Color #14 Clear) not less than 0.7 mils thick.

2. Aluminum Interior Surfaces (Typical): Kawneer Permanodic™ AA-M10C21A31, AAMA 611, Architectural Class II Clear Anodic Coating (Color #17 Clear) not less than 0.4 mils thick.

2.5 DOOR HARDWARE

A. Door Hardware: As specified in Section 08 71 00 – Door Hardware, except for storefront manufacturer's standard type hardware specified below.

B. Weatherstripping: By door manufacturer, wool pile, continuous and replaceable.

C. Sill Sweep Strips: By door manufacturer, resilient seal type, of neoprene.

D. Threshold: As specified in Section 08 71 00.

E. Continuous Hinges: As specified in Section 08 71 00.

F. Pulls: As specified in Section 08 71 00.

G. Electrified Exit Devices: As specified in Section 08 71 00.

H. Actuators: As specified in Section 08 71 00.

2.6 FABRICATION

A. Fabricate aluminum-framed entrance doors in sizes indicated.

B. Include a complete system for assembling components and anchoring doors.

C. Fabrication requirements:
1. Aluminum-framed glass doors shall be reglazable without dismantling perimeter framing.

2. Door corner construction:
   a. Mechanical clip fastening
   b. SIGMA deep-penetration plug welds
   c. 1-1/8" (28.6 mm) long fillet welds inside and outside of all four corners
   d. Hook-in type glazing stops with EPDM glazing gaskets reinforced with non-stretchable cord
3. Joint construction:
   a. Accurately fit and secure joints and corners.
   b. Make joints hairline in appearance.
4. Prepare components with internal reinforcement for door hardware.
5. Arrange fasteners and attachments to conceal from view.

PART 3 – EXECUTION

3.1 EXAMINATION

A. Verify dimensions, tolerances, and method of attachment with other work.

B. Verify that field conditions are acceptable and are ready to receive work.

3.2 INSTALLATION

A. Comply with drawings, shop drawings, and manufacturer's written instructions for installing aluminum-framed entrance doors, hardware, accessories, and other components.

B. Install aluminum-framed entrance doors so that the doors:
   1. Are level, plumb, square, and true to line
   2. Are without distortion and do not impede thermal movement
   3. Are anchored securely in place to structural support
   4. Are in proper relation to wall flashing and other adjacent construction

C. Set the sill threshold in a bed of sealant, as indicated, for weathertight construction.

D. Separate aluminum and other corrodible surfaces from sources of corrosion or electrolytic action at points of contact with other materials.

E. Install perimeter sealant in accordance with Section 07 92 00.

3.3 ADJUSTING

A. Adjust operating hardware for smooth operation.

3.5 CLEANING AND PROTECTION

A. Remove protective material from pre-finished aluminum surfaces.

B. Clean glass and aluminum surfaces of product immediately after installation.

C. Comply with glass manufacturer's written recommendations for final cleaning and maintenance.

D. Remove non-permanent labels and clean surfaces.

E. Remove excess sealants, glazing materials, dirt, and other substances.

F. Remove and replace glass that has been broken, chipped, cracked, abraded, or damaged during the construction period.

G. Remove construction debris from project site and legally dispose of debris.

END OF SECTION 08 41 13

SECTION 08 44 13 - GLAZED ALUMINUM CURTAIN WALLS

PART 1 – GENERAL

1.1 RELATED DOCUMENTS

A. Drawings and general provisions of the Contract, including General and Supplementary Conditions and Division 01 Specification Sections, apply to this Section.

1.2 SUMMARY

A. This Section covers Architectural Aluminum Curtain Wall Systems, including perimeter trims, stools, accessories, shims and anchors, and perimeter sealing of curtain wall framing.
   1. Curtain Wall Type:
      1600 Wall System®2 Curtain Wall:
      Sight line: 2-1/2" (63.5 mm)
      Outside-glazed structural silicone glazed (SSG) format
      System depth: 7-1/2” for 1" insulating glazing.

1.3 RELATED SECTIONS:

A. 07 27 26: Air Barriers

B. 07 92 00: Joint Sealants

C. 08 41 13: Aluminum-Framed Entrance Doors

D. 08 80 00: Glazing

E. 08 84 00: Insulated Metal Glazing Panels

1.4 DEFINITIONS

A. For fenestration industry standard terminology and definitions, refer to the Fenestration & Glazing Industry Alliance (FGIA) Glossary (AAMA AG-13).

1.5 PERFORMANCE REQUIREMENTS

A. General Performance: Product to comply with the specified performance requirements without failure due to defective manufacture, fabrication, installation, or other defects in construction, as determined by testing of glazed aluminum curtain walls representing those indicated for this project.

B. Glazed aluminum curtain walls shall withstand movements of supporting structure including, but not limited to, story drift, twist, column shortening, long-term creep, and deflection from uniformly distributed and concentrated live loads.

C. Failure includes any of these events:
   1. Thermal stresses transferring to building structure
   2. Glass breakage
   3. Loosening or weakening of fasteners, attachments, and other components.

D. Design glazed aluminum curtain walls, including comprehensive engineering analysis by a qualified professional engineer, licensed in the State in which the project is located, using performance requirements and design criteria indicated.

E. Design and size components to withstand the following load requirements without damage or permanent set:
   1. Design Wind Loads: Provide Curtain Wall system; include anchorage, capable of withstanding wind load design pressures based on ASCE 7-16 per the 2020 Building Code of New York State; 30 PSF (service load). Wind speed 113 mph; Risk Category II; Wind Exposure Category B.
   2. Member Deflection: Limit member deflection to 1/175 in any direction, and maximum of 3/4 inch, with full recovery of glazing materials.
   3. Measure performance by testing in accordance with ASTM E 330, using test loads equal to 1.5 times the design wind loads and 10 second duration of maximum pressure.

F. Air Leakage:
   1. The test specimen shall be tested in accordance with ASTM E 283.
   2. Air infiltration rate shall not exceed 0.06 cfm/ft2 (0.3 l/s · m2) at a static air pressure differential of 6.2 psf (300 Pa).

G. Water Resistance:
   1. Static:
      a. The test specimen shall be tested in accordance with ASTM E 331.
      b. There shall be no leakage at a minimum static air pressure differential of 12 psf (575 Pa) as defined in AAMA 501.
   2. Dynamic:
      a. The test specimen shall be tested in accordance with AAMA 501.1.
      b. There shall be no leakage at an air pressure differential of 12 psf (575 Pa) as defined in AAMA 501.

H. Uniform Load:
   1. A static air design load of 40 psf (1915 Pa) shall be applied in the positive and negative direction in accordance with ASTM E 330.
   2. There shall be no deflection in excess of L/175 of the span of any framing member at design load.
   3. At a structural test load equal to 1.5 times the specified design load, no glass breakage or permanent set in the framing members in excess of 0.2% of their clear spans shall occur.

I. Seismic:
   1. When tested to AAMA 501.4, system must meet design displacement (elastic) of 0.010 times the story height and ultimate displacement (inelastic) of 1.5 times the design displacement.
   2. When tested to AAMA 501.6, system must meet dynamic seismic drift causing glass fallout (ΔFallout) of 4.75" or 0.0300 times the story height.

J. Thermal Transmittance (U-factor), Physical Test:
   1. Thermal transmittance test results in accordance with AAMA 1503 or CSA A440 are based upon 1" (25.4 mm) clear, low-emissivity coated glass insulating unit, (1/4" e=0.035, #2), 1/2" warm edge spacer and argon fill gas, 1/4").
   2. When tested using AAMA 1503, the thermal transmittance (U-factor) shall not be more than 0.38 Btu/(hr·ft2·°F).

K. Condensation Resistance Factor (CRF) or Temperature Index (TI):
   1. Condensation resistance test results in accordance with AAMA 1503 or CSA A440 are based upon 1" (25.4 mm) clear low emissivity coated insulating glass, (1/4" e=0.035, #2), 1/2" warm edge spacer and argon fill gas, 1/4").
   2. When tested using AAMA 1503, the CRF frame and CRF glass (with low-emissivity glazing) shall not be less than 65 and 62.2 respectively.

1.6 SUBMITTALS

A. Product Data: For each type of product indicated, include:
   1. Construction details
   2. Material descriptions
   3. Dimensions of individual components and profiles

B. Finishes: Provide a sample document illustrating project-specific information that will be provided after product shipment.

C. Shop Drawings: Provide drawings and calculations signed and sealed by a Professional Engineer licensed in the State in which the project is located. Include plans, elevations, sections, full-size details, and attachments to other work.

D. Samples for Verification: Provide a verification sample for each type of exposed finish required, in manufacturer's standard sizes.

E. Product Test Reports: Provide test reports for glazed aluminum curtain walls.
   1. Test reports must be based on evaluation of comprehensive tests performed by a qualified preconstruction testing agency.
   2. Test reports must indicate compliance with performance requirements.

1.7 QUALITY ASSURANCE:

A. Manufacturer and Installer: Company specializing in aluminum glazing systems with minimum five years of documented experience.

B. Source Limitations: Obtain aluminum curtain wall system through one source from a single manufacturer.

C. Product Options:
   1. Information on drawings and in specifications establishes requirements for aesthetic effects and performance characteristics of assemblies. Aesthetic effects are indicated by dimensions, arrangements, alignment, and profiles of components and assemblies as they relate to sightlines, to one another, and to adjoining construction.
   2. Do not modify intended aesthetic effects, as judged solely by Architect, except with Architect's approval. If modifications are proposed, submit comprehensive explanatory data to Architect for review.

D. Mockups:
   1. Provide mock-up of typical wall system condition including all components occurring on project. Assemble to illustrate component assembly including glazing materials, weep drainage system, attachments, anchors, perimeter sealant, interface with roofing membrane and coping system.
   2. Locate on-site where directed. Accepted mock-up may remain as part of the Work.

E. Pre-Installation Conference:
   1. Conduct conference at project site to comply with requirements in Division 01 Project Management and Coordination Section.

1.8 PROJECT CONDITIONS

A. Field Measurements:
   1. Verify actual locations of structural supports for glazed aluminum curtain walls by field measurements before fabrication.
   2. Indicate measurements on shop drawings.

1.9 WARRANTY

A. Correct defective Work within a five year period after Date of Substantial Completion.

B. Provide five year manufacturer warranty against failure of glass seal on insulating glass units, including interplane dusting or misting. Include provision for replacement of failed units.

C. Provide ten year manufacturer warranty against excessive degradation of exterior finish. Indicate provision for replacement of units with excessive fading, chalking or flaking.

PART 2 – PRODUCTS

2.1 MANUFACTURERS

A. Basis-of-Design Product:
   1. Kawneer Company, Inc. 1600 Wall System®2 Curtain Wall.
      a. Sight line: 2-1/2" (63.5 mm)
      b. Outside-glazed pressure plate format
      c. System depth: 7-1/2" (190.5 mm) for 1" (25.4 mm) insulating glazing and 1/4" (6.3 mm) monolithic glazing
      d. Tested to AAMA 501, ASTM E 1886, E 1996, and TAS 201, 202, 203

2.2 MATERIALS

A. Aluminum Extrusions:
   1. Alloy and temper recommended by glazed aluminum curtain wall manufacturer for strength, corrosion resistance, and application of required finish.
   2. Not less than 0.070" (1.8 mm) wall thickness at any location for the main frame.
   3. Complying with ASTM B221: 6063-T6 alloy and temper.

B. Aluminum Sheet Alloy:
   1. Shall meet the requirements of ASTM B209.

C. Fasteners:
   1. Aluminum, nonmagnetic stainless steel or other materials must be non-corrosive and compatible with aluminum members, trim hardware, anchors, and other components.

D. Anchors, Clips, and Accessories:
   1. Aluminum, nonmagnetic stainless steel, or zinc-coated steel or iron complying with ASTM B 633 for SC 3 severe service conditions or other suitable zinc coating.
   2. Anchors, clips, and accessories shall provide sufficient strength to withstand the design pressure indicated.

E. Pressure Plate:
   1. Pressure plate shall be aluminum.
   2. Pressure plate shall be fastened to the mullion with stainless steel screws.

F. Reinforcing Members:
   1. Aluminum, nonmagnetic stainless steel, or nickel/chrome-plated steel complying with ASTM B 456 for Type SC 3 severe service conditions, or zinc-coated steel or iron complying with ASTM B 633 for SC 3 severe service conditions or other suitable zinc coating.
   2. Reinforcing members must provide sufficient strength to withstand the design pressure indicated.

G. Sealant:

   1. For sealants required within fabricated curtain wall system, provide permanently elastic, non-shrinking, and non-migrating type recommended by sealant manufacturer for joint size and movement.

H. Thermal Barrier:
   1. Thermal separator shall be extruded of a silicone compatible elastomer that provides a minimum 1/4" (6.3 mm) separation.

I. Tolerances:
   1. References to tolerances for wall thickness and other cross-sectional dimensions of glazed curtain wall members are nominal and in compliance with AA Aluminum Standards and Data.

2.3 CURTAIN WALL FRAMING

A. Framing Members:
   1. Manufacturer's standard extruded- or formed-aluminum framing members of thickness required and reinforced as required to support imposed loads
   2. Glazing System: Structural silicone glazed (SSG)
   3. Glazing Plane: Front

B. Glass:
   1. Insulating glass:
      a. 1" (25.4 mm)
   2. Spandrel and Insulated Metal Glazing Panel applications:
      a. 1” (25.4 mm)

C. Brackets and Reinforcements:
   1. Manufacturer's standard high-strength aluminum with non-staining, non-ferrous shims for aligning system components.

D. Framing Sealants:
   1. Shall be suitable for glazed aluminum curtain wall as recommended by sealant manufacturer.

E. Fasteners and Accessories:
   1. Manufacturer's standard corrosion-resistant, non-staining, non-bleeding fasteners and accessories must be compatible with adjacent materials.
   2. Where exposed, fasteners and accessories shall be stainless steel.

F. Perimeter Anchors:
   1. When steel anchors are used, provide insulation between steel material and aluminum material to prevent galvanic action.

G. Packing, Shipping, Handling, and Unloading:
   1. Deliver materials in manufacturer's original, unopened, undamaged containers with identification labels intact.

H. Storage and Protection:
   1. Store materials so that they are protected from exposure to harmful weather conditions.
   2. Handle material and components to avoid damage.
   3. Protect material against damage from elements, construction activities, and other hazards before, during, and after installation.

2.4 GLAZING

A. Glazing to meet requirements in Section 08 80 00.

B. Insulated Metal Glazing Panels to meet requirements in Section 08 84 00.

C. Glazing Gaskets:
   1. Gaskets to meet requirements of ASTM C864.

D. Spacers and Setting Blocks:
   1. Manufacturer's standard elastomeric type.

E. Bond-Breaker Tape:
   1. Manufacturer's standard TFE-fluorocarbon or polyethylene material to which sealants will not develop adhesion.

F. Glazing Sealants:
   1. As recommended by manufacturer for joint type.

2.5 ACCESSORY MATERIALS

A. Bituminous Paint:
   1. Cold-applied asphalt-mastic paint
   2. Complies with SSPC-Paint 12 requirements except containing no asbestos
   3. Formulated for 30-mil (0.762 mm) thickness per coat

2.6 FABRICATION

A. Extrude or form aluminum shapes before finishing.

B. Fabricate components that, when assembled, have the following characteristics:
   1. Profiles that are sharp, straight, and free of defects or deformations
   2. Accurately fitted joints
   3. Physical and thermal isolation of glazing from framing members
   4. Accommodations for thermal and mechanical movements of glazing and framing that maintain required glazing edge clearances
   5. Provisions for field replacement of glazing from exterior
   6. Fasteners, anchors, and connection devices that are concealed from view to the greatest extent possible
   7. Internal weeping system or other means to drain water passing joints, condensation occurring within framing members, and moisture migrating within glazed aluminum curtain wall to exterior

C. Curtain Wall Framing
   1. Fabricate components for assembly using shear block system following manufacturer's standard installation instructions.

D. After fabrication, clearly mark components to identify their locations in project according to shop drawings.

2.7 ALUMINUM FINISHES

A. Factory Finishing:
   1. Aluminum Exterior Surfaces (Typical): Kawneer Permanodic™ AA-M10C21A41/ AA-M45C22A41, AAMA 611, Architectural Class I Clear Anodic Coating (Color #14 Clear) not less than 0.7 mils thick.
   2. Aluminum Interior Surfaces (Typical): Kawneer Permanodic™ AA-M10C21A31, AAMA 611, Architectural Class II Clear Anodic Coating (Color #17 Clear) not less than 0.4 mils thick.

PART 3 – EXECUTION

3.1 EXAMINATION

A. With installer present, examine areas for compliance with requirements for installation tolerances and other conditions affecting performance of the work.

B. Proceed with installation only after correcting unsatisfactory conditions.

3.2 INSTALLATION

A. General: Install curtain wall systems plumb, level, and true to line, without warp or rack of frames, within manufacturer's prescribed tolerances, and complying with installation instructions. Provide support and anchor in place.
   1. Attach to structure to permit sufficient adjustment to accommodate construction tolerances and other irregularities.
   2. Provide alignment attachments and shims to permanently fasten system to building structure.
   3. Align assembly plumb and level, free of warp tolerances, aligning with adjacent work.
   4. Provide thermal isolation where components penetrate or disrupt building insulation.
   5. Dissimilar Materials: Provide separation of aluminum materials from sources of corrosion or electrolytic action contact points.
   6. Install flashings. Seal water tight.
   7. Pack fibrous insulation in shim spaces at perimeter of assembly to maintain continuity of thermal barrier.
   8. Structural Glazing Adhesive: Install glazing adhesive and weatherseal sealant in accordance with adhesive manufacturer's instructions.
   9. Install perimeter sealant in accordance with Section 07 92 00 – Sealants.
   10. Glazing: Glass shall be outside-glazed. Glass shall be held in place with extruded aluminum pressure plates anchored to the mullion using stainless steel fasteners that are spaced no more than 9" (228.6 mm) on center.
   11. Water Drainage: Each light of glass shall be compartmentalized using joint plugs and silicone sealant to divert water to the horizontal weep locations. Weep holes shall be located in the horizontal pressure plates and covers to divert water to the exterior of the building.

B. Related Products Installation:
   1. Sealants (Perimeter): Refer to Section 07 92 00 – Sealants.
   2. Glass: Refer to Section 08 80 00 – Glazing.
      a. Reference: ANSI Z97.1, CPSC 16 CFR 1201, and GANA Glazing Manual.

3.3 FIELD QUALITY CONTROL

A. Field Tests: Architect shall select curtain wall units to be tested as soon as a representative portion of the project has been installed, glazed, perimeter-caulked, and cured. Conduct tests for air infiltration and water penetration with manufacturer's representative present. Tests that do not meet the specified performance requirements and units that have deficiencies shall be corrected as part of the contract amount.
   1. Testing shall be performed per AAMA 503 by a qualified independent testing agency. Refer to Testing Section for payment of testing and testing requirements.
      a. Air Infiltration Tests: Conduct tests in accordance with ASTM E 783. Allowable air infiltration shall not exceed 1.5 times the amount indicated in the performance requirements or 0.09 cfm/ft2, whichever is greater.
      b. Water Infiltration Tests: Conduct tests in accordance with ASTM E 1105. No uncontrolled water leakage is permitted when tested at a static test pressure of two-thirds the specified water penetration pressure but not less than 8 psf (383 Pa).

B. Manufacturer's Field Services: Upon owner's written request, provide periodic site visit by manufacturer's field service representative.

3.4 ADJUSTING, CLEANING, AND PROTECTION

A. Protection: Protect installed product's finish surfaces from damage during construction. Protect aluminum curtain wall system from damage from grinding and polishing compounds, plaster, lime, acid, cement, or other harmful contaminants.

B. Cleaning: Repair or replace damaged installed products. Clean installed products in accordance with manufacturer's instructions prior to owner's acceptance.

C. Remove and replace glass that has been broken, chipped, cracked, abraded, or damaged during the construction period.

D. Remove construction debris from project site and legally dispose of debris.

END OF SECTION 08 44 13

SECTION 08 71 00 - DOOR HARDWARE

PART 1 - GENERAL

1.1 SUMMARY

A. Section includes:

1. Mechanical and electrified door hardware
2. Electronic access control system components

B. Section excludes:

1. Windows
2. Cabinets (casework), including locks in cabinets
3. Signage
4. Toilet accessories

C. Related Sections:

1. Section 07 92 00 - Joint Sealants for sealant requirements applicable to threshold installation under the work of this section.
2. Section 09 90 00 - Paints and Coatings for touchup finishing or refinishing of existing openings modified by the work of this section.
3. Division 26 sections for connections to electrical power system and for low-voltage wiring.
4. Division 28 sections for coordination with other components of electronic access control system.

1.2 REFERENCES

A. Applicable state and local building codes and standards.

B. Accessibility

1. Chapter 11 of the 2020 Building Code of New York State and ICC A117.1 - 2009 Accessible and Usable Buildings and Facilities.

C. UL – Underwriters Laboratories

1. UL 10B - Fire Test of Door Assemblies
2. UL 10C - Positive Pressure Test of Fire Door Assemblies
3. UL 1784 - Air Leakage Tests of Door Assemblies
4. UL 305 - Panic Hardware

D. DHI - Door and Hardware Institute

1. Sequence and Format for the Hardware Schedule
2. Recommended Locations for Builders Hardware
3. Keying Systems and Nomenclature

4. Installation Guide for Doors and Hardware

E. NFPA – National Fire Protection Association

1. NFPA 70 – National Electric Code
2. NFPA 80 – 2016 Edition – Standard for Fire Doors and Other Opening Protectives
3. NFPA 101 – Life Safety Code
4. NFPA 105 – Smoke and Draft Control Door Assemblies
5. NFPA 252 – Fire Tests of Door Assemblies

F. ANSI - American National Standards Institute

1. ANSI A117.1 – 2017 Edition – Accessible and Usable Buildings and Facilities
2. ANSI/BHMA A156.1 - A156.29, and ANSI/BHMA A156.31 - Standards for Hardware and Specialties
3. ANSI/BHMA A156.28 - Recommended Practices for Keying Systems
4. ANSI/WDMA I.S. 1A - Interior Architectural Wood Flush Doors
5. ANSI/SDI A250.8 - Standard Steel Doors and Frames

1.3 SUBMITTALS

A. General:

1. Submit in accordance with Conditions of Contract and Division 01 requirements.
2. Prior to forwarding submittal:
   a. Review drawings and Sections from related trades to verify compatibility with specified hardware.
   b. Highlight, encircle, or otherwise specifically identify on submittals: deviations from Contract Documents, issues of incompatibility or other issues which may detrimentally affect the Work.

B. Action Submittals:

1. Product Data: Submit technical product data for each item of door hardware, installation instructions, maintenance of operating parts and finish, and other information necessary to show compliance with requirements.
2. Riser and Wiring Diagrams: After final approval of hardware schedule, submit details of electrified door hardware, indicating:
   a. Wiring Diagrams: For power, signal, and control wiring and including:
      1) Details of interface of electrified door hardware and building safety and security systems.
      2) Schematic diagram of systems that interface with electrified door hardware.
      3) Point-to-point wiring.
      4) Risers.

3. Samples for Verification: If requested by Architect, submit production sample of requested door hardware unit in finish indicated and tagged with full description for coordination with schedule.
   a. Samples will be returned to supplier. Units that are acceptable to Architect may, after final check of operations, be incorporated into Work, within limitations of key coordination requirements.

4. Door Hardware Schedule:
   a. Submit concurrent with submissions of Product Data, Samples, and Shop Drawings. Coordinate submission of door hardware schedule with scheduling requirements of other work to facilitate fabrication of other work critical in Project construction schedule.
   b. Submit under direct supervision of a Door Hardware Institute (DHI) certified Architectural Hardware Consultant (AHC) or Door Hardware Consultant (DHC) with hardware sets in vertical format as illustrated by Sequence of Format for the Hardware Schedule published by DHI.
   c. Indicate complete designations of each item required for each opening, include:
      1) Door Index: door number, heading number, and Architect's hardware set number.
      2) Quantity, type, style, function, size, and finish of each hardware item.
      3) Name and manufacturer of each item.
      4) Fastenings and other pertinent information.
      5) Location of each hardware set cross-referenced to indications on Drawings.
      6) Explanation of all abbreviations, symbols, and codes contained in schedule.
      7) Mounting locations for hardware.
      8) Door and frame sizes and materials.
      9) Degree of door swing and handing.
      10) Operational Description of openings with electrified hardware covering egress, ingress (access), and fire/smoke alarm connections.

5. Key Schedule:
   a. After Keying Conference, provide keying schedule that includes levels of keying, explanations of key system's function, key symbols used, and door numbers controlled.
   b. Use ANSI/BHMA A156.28 "Recommended Practices for Keying Systems" as guideline for nomenclature, definitions, and approach for selecting optimal keying system.
   c. Provide 3 copies of keying schedule for review prepared and detailed in accordance with referenced DHI publication. Include schematic keying diagram and index each key to unique door designations.
   d. Index keying schedule by door number, keyset, hardware heading number, cross keying instructions, and special key stamping instructions.
   e. Provide one complete bitting list of key cuts and one key system schematic illustrating system usage and expansion. Forward bitting list, key cuts and key system schematic directly to Owner, by means as directed by Owner.
   f. Prepare key schedule by or under supervision of supplier, detailing Owner's final keying instructions for locks.

C. Informational Submittals:

1. Provide Qualification Data for Supplier, Installer and Architectural Hardware Consultant.
2. Provide Product Data:
   a. Certify that door hardware approved for use on types and sizes of labeled fire-rated doors complies with listed fire-rated door assemblies.
   b. Include warranties for specified door hardware.

D. Closeout Submittals:

1. Operations and Maintenance Data: Provide in accordance with Division 01 and include:
   a. Complete information on care, maintenance, and adjustment; data on repair and replacement parts, and information on preservation of finishes.

b. Catalog pages for each product.
c. Final approved hardware schedule edited to reflect conditions as installed.
d. Final keying schedule
e. Copy of warranties including appropriate reference numbers for manufacturers to identify project.
f. As-installed wiring diagrams for each opening connected to power, both low voltage and 110 volts.

E. Inspection and Testing:

1. Submit written reports to the Owner and Authority Having Jurisdiction (AHJ) of the results of functional testing and inspection for:
   a. Fire door assemblies, in compliance with NFPA 80.
   b. Required egress door assemblies, in compliance with NFPA 101.

1.4 QUALITY ASSURANCE

A. Qualifications and Responsibilities:

1. Supplier: Recognized architectural hardware supplier with a minimum of 5 years documented experience supplying both mechanical and electromechanical door hardware similar in quantity, type, and quality to that indicated for this Project. Supplier to be recognized as a factory direct distributor by the manufacturer of the primary materials with a warehousing facility in the Project's vicinity. Supplier to have on staff, a certified Architectural Hardware Consultant (AHC) or Door Hardware Consultant (DHC) available to Owner, Architect, and Contractor, at reasonable times during the Work for consultation.
2. Installer: Qualified tradesperson skilled in the application of commercial grade hardware with experience installing door hardware similar in quantity, type, and quality as indicated for this Project.
3. Architectural Hardware Consultant: Person who is experienced in providing consulting services for door hardware installations that are comparable in material, design, and extent to that indicated for this Project and meets these requirements:
   a. For door hardware: DHI certified AHC or DHC.
   b. Can provide installation and technical data to Architect and other related subcontractors.
   c. Can inspect and verify components are in working order upon completion of installation.
   d. Capable of producing wiring diagram and coordinating installation of electrified hardware with Architect and electrical engineers.

4. Single Source Responsibility: Obtain each type of door hardware from single manufacturer.

B. Certifications:

1. Fire-Rated Door Openings:
   a. Provide door hardware for fire-rated openings that complies with NFPA 80 and requirements of authorities having jurisdiction.

b. Provide only items of door hardware that are listed products tested by UL LLC, Intertek Testing Services, or other testing and inspecting organizations acceptable to authorities having jurisdiction for use on types and sizes of doors indicated, based on testing at positive pressure and according to NFPA 252 or UL 10C and in compliance with requirements of fire-rated door and door frame labels.

2. Smoke and Draft Control Door Assemblies:
   a. Provide door hardware that meets requirements of assemblies tested according to UL 1784 and installed in compliance with NFPA 105
   b. Comply with the maximum air leakage of 0.3 cfm/sq. ft. (3 cu. m per minute/sq. m) at tested pressure differential of 0.3-inch wg (75 Pa) of water.

3. Electrified Door Hardware
   a. Listed and labeled as defined in NFPA 70, Article 100, by testing agency acceptable to authorities having jurisdiction.

4. Accessibility Requirements:
   a. Comply with governing accessibility regulations cited in "REFERENCES" article 087100, 1.02.D3 herein for door hardware on doors in an accessible route. This project must comply with all Federal Americans with Disability Act regulations and all Local Accessibility Regulations.

C. Pre-Installation Meetings

1. Keying Conference
   a. Incorporate keying conference decisions into final keying schedule after reviewing door hardware keying system including:
      1) Function of building, flow of traffic, purpose of each area, degree of security required, and plans for future expansion.
      2) Preliminary key system schematic diagram.
      3) Requirements for key control system.
      4) Requirements for access control.
      5) Address for delivery of keys.

2. Pre-installation Conference
   a. Review and finalize construction schedule and verify availability of materials, Installer's personnel, equipment, and facilities needed to make progress and avoid delays.
   b. Inspect and discuss preparatory work performed by other trades.
   c. Inspect and discuss electrical roughing-in for electrified door hardware.
   d. Review sequence of operation for each type of electrified door hardware.
   e. Review required testing, inspecting, and certifying procedures.
   f. Review questions or concerns related to proper installation and adjustment of door hardware.

3. Electrified Hardware Coordination Conference:
   a. Prior to ordering electrified hardware, schedule and hold meeting to coordinate door hardware with security, electrical, doors and frames, and other related suppliers.

1.5 DELIVERY, STORAGE, AND HANDLING

A. Inventory door hardware on receipt and provide secure lock-up for hardware delivered to Project site. Promptly replace products damaged during shipping.

B. Tag each item or package separately with identification coordinated with final door hardware schedule, and include installation instructions, templates, and necessary fasteners with each item or package. Deliver each article of hardware in manufacturer's original packaging.

C. Maintain manufacturer-recommended environmental conditions throughout storage and installation periods.

D. Provide secure lock-up for door hardware delivered to Project. Control handling and installation of hardware items so that completion of Work will not be delayed by hardware losses both before and after installation.

E. Handle hardware in manner to avoid damage, marring, or scratching. Correct, replace or repair products damaged during Work. Protect products against malfunction due to paint, solvent, cleanser, or any chemical agent.

F. Deliver keys to manufacturer of key control system for subsequent delivery to Owner.

1.6 COORDINATION

A. Coordinate layout and installation of floor-recessed door hardware with floor construction. Cast anchoring inserts into concrete.

B. Installation Templates: Distribute for doors, frames, and other work specified to be factory or shop prepared. Check Shop Drawings of other work to confirm that adequate provisions are made for locating and installing door hardware to comply with indicated requirements.

C. Security: Coordinate installation of door hardware, keying, and access control with Owner's security consultant.

D. Electrical System Roughing-In: Coordinate layout and installation of electrified door hardware with connections to power supplies and building safety and security systems.

1.7 WARRANTY

A. Manufacturer's standard form in which manufacturer agrees to repair or replace components of door hardware that fail in materials or workmanship within published warranty period.

1. Warranty does not cover damage or faulty operation due to improper installation, improper use or abuse.
2. Warranty Period: Beginning from date of Substantial Completion, for durations indicated in manufacturer's published listings.

1.8 MAINTENANCE

A. Furnish complete set of special tools required for maintenance and adjustment of hardware, including changing of cylinders.

B. Turn over unused materials to Owner for maintenance purposes.

PART 2 - PRODUCTS

2.1 MANUFACTURERS

A. Approval of alternate manufacturers and/or products other than those listed as "Scheduled Manufacturer" or "Acceptable Manufacturers" in the individual article for the product category are only to be considered by official substitution request in accordance with section 01 25 00.

B. Approval of products from manufacturers indicated in "Acceptable Manufacturers" is contingent upon those products providing all functions and features and meeting all requirements of scheduled manufacturer's product.

C. Where specified hardware is not adaptable to finished shape or size of members requiring hardware, furnish suitable types having same operation and quality as type specified, subject to Architect's approval.

2.2 MATERIALS

A. Fabrication

1. Provide door hardware manufactured to comply with published templates generally prepared for machine, wood, and sheet metal screws. provide screws according to manufacturer’s recognized installation standards for application intended.
2. Finish exposed screws to match hardware finish, or, if exposed in surfaces of other work, to match finish of this other work including prepared for paint surfaces to receive painted finish.
3. Provide concealed fasteners wherever possible for hardware units exposed when door is closed. Coordinate with “Metal Doors and Frames”, “Flush Wood Doors”, “Stile and Rail Wood Doors” to ensure proper reinforcements. Advise the Architect where visible fasteners, such as thru bolts, are required.

B. Provide screws, bolts, expansion shields, drop plates and other devices necessary for hardware installation.

1. Where fasteners are exposed to view: Finish to match adjacent door hardware material.

C. Cable and Connectors:

1. Where scheduled in the hardware sets, provide each item of electrified hardware and wire harnesses with number and gage of wires enough to accommodate electric function of specified hardware.
2. Provide Molex connectors that plug directly into connectors from harnesses, electric locking and power transfer devices.

3. Provide through-door wire harness for each electrified locking device installed in a door and wire harness for each electrified hinge, electrified continuous hinge, electrified pivot, and electric power transfer for connection to power supplies.

2.3 HINGES

A. Manufacturers and Products:

1. Scheduled Manufacturer and Product:
   a. Ives 5BB series

B. Requirements:

1. Provide hinges conforming to ANSI/BHMA A156.1.
2. Provide five knuckle, ball bearing hinges.
3. 1-3/4 inch (44 mm) thick doors, up to and including 36 inches (914 mm) wide:
   a. Exterior: Standard weight, bronze or stainless steel, 4-1/2 inches (114 mm) high
   b. Interior: Standard weight, steel, 4-1/2 inches (114 mm) high

4. 1-3/4 inch (44 mm) thick doors over 36 inches (914 mm) wide:
   a. Exterior: Heavy weight, bronze/stainless steel, 5 inches (127 mm) high
   b. Interior: Heavy weight, steel, 5 inches (127 mm) high

5. 2 inches or thicker doors:
   a. Exterior: Heavy weight, bronze or stainless steel, 5 inches (127 mm) high
   b. Interior: Heavy weight, steel, 5 inches (127 mm) high

6. Adjust hinge width for door, frame, and wall conditions to allow proper degree of opening.
7. Provide three hinges per door leaf for doors 90 inches (2286 mm) or less in height, and one additional hinge for each 30 inches (762 mm) of additional door height.
8. Hinge Pins: Except as otherwise indicated, provide hinge pins as follows:
   a. Steel Hinges: Steel pins
   b. Non-Ferrous Hinges: Stainless steel pins
   c. Out-Swinging Exterior Doors: Non-removable pins
   d. Out-Swinging Interior Lockable Doors: Non-removable pins
   e. Interior Non-lockable Doors: Non-rising pins

9. Provide hinges with electrified options as scheduled in the hardware sets. Provide with number and gage of wires enough to accommodate electric function of specified hardware. Locate electric hinge at second hinge from bottom or nearest to electrified locking component. Provide mortar guard for each electrified hinge specified.

2.4 CONTINUOUS HINGES

A. Manufacturers:

1. Scheduled Manufacturer:
   a. Ives

B. Requirements:

1. Provide aluminum geared continuous hinges conforming to ANSI/BHMA A156.26, Grade 1.

2. Provide aluminum geared continuous hinges, where specified in the hardware sets, fabricated from 6063-T6 aluminum.
3. Provide split nylon bearings at each hinge knuckle for quiet, smooth, self-lubricating operation.
4. Provide hinges capable of supporting door weights up to 450 pounds, and successfully tested for 1,500,000 cycles.
5. On fire-rated doors, provide aluminum geared continuous hinges classified for use on rated doors by testing agency acceptable to authority having jurisdiction.
6. Provide aluminum geared continuous hinges with electrified option scheduled in the hardware sets. Provide with number and gage of wires enough to accommodate electric function of specified hardware.
7. Provide hinges 1 inch (25 mm) shorter in length than nominal height of door, unless otherwise noted or door details require shorter length and with symmetrical hole pattern.

2.5 FLUSH BOLTS

A. Manufacturers:

1. Scheduled Manufacturer:
   a. Ives

B. Requirements:

1. Provide automatic, constant latching, and manual flush bolts with forged bronze or stainless-steel face plates, extruded brass levers, and with wrought brass guides and strikes. Provide 12 inch (305 mm) steel or brass rods at doors up to 90 inches (2286 mm) in height. For doors over 90 inches (2286 mm) in height increase top rods by 6 inches (152 mm) for each additional 6 inches (152 mm) of door height. Provide dust-proof strikes at each bottom flush bolt.

2.6 MORTISE LOCKS

A. Manufacturers and Products:

B. Requirements:

1. Provide motor based electrified locksets that comply with the following requirements:
2. (KEY OVERRIDE OPTION WHEN XL13-439 IS SPECIFIED IN HARDWARE SETS) Provide locks with a key override feature built into the chassis that allows the outside key to retract the deadbolt and/or latchbolt, overriding the inside thumbturn when it is being held in the locked position.
3. Lever Trim: Solid brass, bronze, or stainless steel, cast or forged in design specified, with wrought roses and external lever spring cages. Provide thru-bolted levers with 2-piece spindles.
   a. Vandlgard: Provide levers with vandal resistant technology for use at heavy traffic or abusive applications.

2.7 TUBULAR LOCKS – GRADE 2

A. Manufacturers and Products:

1. Scheduled Manufacturer and Product:
   a. Schlage LT series

B. Requirements:

1. Provide tubular locks with passage, privacy, and dummy trim functions.
2. Provide locks with standard 2-3/4 inches (70 mm) backset with 1/2-inch (13 mm) latch throw. Provide locksets with a 2-3/8 inches (60mm) backset option. Provide proper latch throw for 20-minute UL listing.
3. Provide privacy functions with self-cancelling egress/non lockout feature.
4. Provide tubular locks with concealed fasteners and bi-directional lever movement that fit standard 2-1/8 inches (54 mm) diameter bore.
5. Rose Size: as scheduled.
6. Provide locksets for 1-3/8 inches (35 mm) to 1-3/4 inches (44 mm) door thickness standard, with option for 2-inch (51 mm) door thickness.
7. Provide standard T-strikes unless extended lip strikes are necessary to protect trim.
8. Lever Trim: Solid brass, bronze, or stainless steel, cast or forged in design specified, with wrought roses and external lever spring cages. Provide thru-bolted levers with 2-piece spindles.

2.8 CYLINDERS

A. Manufacturers and Products:

1. Scheduled Manufacturer and Product:
   a. Schlage Everest 29 Primus XP

B. Requirements:

1. Provide cylinders/cores, compliant with ANSI/BHMA A156.5; latest revision; cylinder face finished to match lockset, manufacturer's series as indicated. Refer to "KEYING" article, herein.
2. Provide cylinders in the below-listed configuration(s), distributed throughout the Project as indicated.
   a. High Security: dual-locking cylinder with permanent core requiring restricted, patented keyway. Dual-locking mechanism with interlocking finger pin(s) to check for patented features on keys.
3. Patent Protection: Cylinders/cores requiring use of restricted, patented keys, patent protected.
4. Nickel silver bottom pins.

2.9 CYLINDERS

A. Manufacturers and Products:

1. Scheduled Manufacturer and Product:
   a. Schlage OBV Primus RP

B. Requirements:

1. Provide cylinders/cores, compliant with ANSI/BHMA A156.5; latest revision; cylinder face finished to match lockset, manufacturer's series as indicated. Refer to "KEYING" article, herein.
2. Provide high security dual-locking cylinder with permanent core and nickel silver bottom pins.

2.10 CYLINDERS

A. Manufacturers and Products:

1. Scheduled Manufacturer and Product:
   a. Schlage Everest 29 SL

B. Requirements:

1. Provide cylinders/cores compliant with ANSI/BHMA A156.5; latest revision; cylinder face finished to match lockset; manufacturer's series as indicated. Refer to "KEYING" article, herein.
2. Provide cylinders in the below-listed configuration(s), distributed throughout the Project as indicated.
   a. Patented Restricted 7-Pin: cylinder with permanent 7-pin core with keys capable of working in full size key-in-lever/knob, and small format interchangeable core.
3. Patent Protection: Cylinders/cores requiring use of restricted, patented keys, patent protected.
4. Nickel silver bottom pins.

2.11 CYLINDERS

A. Manufacturers and Products:

1. Scheduled Manufacturer and Product:
   a. Schlage Everest 29 T

B. Requirements:

1. Provide cylinders/cores compliant with ANSI/BHMA A156.5; latest revision; cylinder face finished to match lockset; manufacturer's series as indicated. Refer to "KEYING" article, herein.
2. Provide cylinders in the below-listed configuration(s), distributed throughout the Project as indicated.
   a. Patented Restricted: cylinder with interchangeable core with patented, restricted keyway.
3. Patent Protection: Cylinders/cores requiring use of restricted, patented keys, patent protected.
4. Nickel silver bottom pins.

2.12 CYLINDERS

A. Manufacturers and Products:

1. Scheduled Manufacturer and Product:
   a. Schlage Everest 29 S

B. Requirements:

1. Provide cylinders/cores compliant with ANSI/BHMA A156.5; latest revision; cylinder face finished to match lockset; manufacturer's series as indicated. Refer to "KEYING" article, herein.
2. Provide cylinders in the below-listed configuration(s), distributed throughout the Project as indicated.
   a. Patented Open: cylinder with interchangeable core with open keyway.
3. Patent Protection: Cylinders/cores requiring use of restricted, patented keys, patent protected.
4. Nickel silver bottom pins.

2.13 CYLINDERS

A. Manufacturers and Products:

1. Scheduled Manufacturer and Product:
   a. Schlage Everest 29 R

B. Requirements:

1. Provide cylinders/cores compliant with ANSI/BHMA A156.5; latest revision; cylinder face finished to match lockset; manufacturer's series as indicated. Refer to "KEYING" article, herein.
2. Provide cylinders in the below-listed configuration(s), distributed throughout the Project as indicated.
   a. Patented Restricted Small Format: cylinder with small format interchangeable cores (SFIC) with restricted, patented keyway.
3. Patent Protection: Cylinders/cores requiring use of restricted, patented keys, patent protected.
4. Nickel silver bottom pins.

2.14 CYLINDERS

A. Manufacturers and Products:

1. Scheduled Manufacturer:
   a. Falcon

B. Requirements:

1. Provide cylinders/cores compliant with ANSI/BHMA A156.5; latest revision; cylinder face finished to match lockset; manufacturer's series as indicated. Refer to "KEYING" article, herein.
2. Provide cylinders in the below-listed configuration(s), distributed throughout the Project as indicated.
   a. Open: cylinder with small format interchangeable core (SFIC) core with open keyway

2.15 CYLINDERS

A. Manufacturers:

1. Scheduled Manufacturer and Product:
   a. <INSERT EXISTING KEY SYSTEM>

2. Acceptable Manufacturers and Products:
   a. No Substitute

B. Requirements:

1. Provide cylinders/cores to match Owner's existing key system, compliant with ANSI/BHMA A156.5; latest revision; cylinder face finished to match lockset, manufacturer's series as indicated. Refer to "KEYING" article, herein.

2.16 KEYING

A. Scheduled System:

1. New factory registered system:
   a. Provide a factory registered keying system, complying with guidelines in ANSI/BHMA A156.28, incorporating decisions made at keying conference.

2. Existing factory registered system:
   a. Provide cylinders/cores keyed into Owner's existing factory registered keying system. Comply with guidelines in ANSI/BHMA A156.28, incorporating decisions made at keying conference.

3. Existing non-factory registered system:
   a. Provide cylinders/cores keyed into Owner's existing keying system managed by Owner's locksmith, complying with guidelines in ANSI/BHMA A156.28, incorporating decisions made at keying conference. Contact:
      1) Firm Name:
      2) Contact Person:
      3) Telephone:

B. Requirements:

1. Permanent Keying:
   a. Provide permanent cylinders/cores keyed by the manufacturer according to the following key system.
      1) Master Keying system as directed by the Owner.

b. Forward bitting list and keys separately from cylinders, by means as directed by Owner. Failure to comply with forwarding requirements will be cause for replacement of cylinders/cores involved at no additional cost to Owner.
c. Provide keys with the following features:
   1) Material: Nickel silver; minimum thickness of .107-inch (2.3mm)
   2) Patent Protection: Keys and blanks protected by one or more utility patent(s).
d. Identification:
   1) Mark permanent cylinders/cores and keys with applicable blind code for identification. Do not provide blind code marks with actual key cuts.
   2) Identification stamping provisions must be approved by the Architect and Owner.
   3) Stamp cylinders/cores and keys with Owner's unique key system facility code as established by the manufacturer; key symbol and embossed or stamped with "DO NOT DUPLICATE" along with the "PATENTED" or patent number to enforce the patent protection.
   4) Failure to comply with stamping requirements will be cause for replacement of keys involved at no additional cost to Owner.
   5) Forward permanent cylinders/cores to Owner, separately from keys, by means as directed by Owner.
e. Quantity: Furnish in the following quantities.
   1) Permanent Control Keys: 3.
   2) Master Keys: 6.
   3) Change (Day) Keys: 3 per cylinder/core that is keyed differently
   4) Key Blanks: Quantity as determined in the keying meeting.

2.17 KEY CONTROL SYSTEM

A. Manufacturers:

1. Scheduled Manufacturer:
   a. Telkee

B. Requirements:

1. Provide key control system, including envelopes, labels, tags with self-locking key clips, receipt forms, 3-way visible card index, temporary markers, permanent markers, and standard metal cabinet, all as recommended by system manufacturer, with capacity for 150% of number of locks required for Project.
   a. Provide complete cross index system set up by hardware supplier, and place keys on markers and hooks in cabinet as determined by final key schedule.
   b. Provide hinged-panel type cabinet for wall mounting.

2.18 DOOR CLOSERS

A. Manufacturers and Products:

1. Scheduled Manufacturer and Product:
   a. LCN 4050A series

B. Requirements:

1. Provide door closers conforming to ANSI/BHMA A156.4 Grade 1 requirements by BHMA certified independent testing laboratory. ISO 9000 certify closers. Stamp units with date of manufacture code.
2. Provide door closers with fully hydraulic, full rack and pinion action with cast aluminum cylinder.
3. Closer Body: 1-1/2-inch (38 mm) diameter with 11/16-inch (17 mm) diameter heat-treated pinion journal and full complement bearings.
4. Hydraulic Fluid: Fireproof, passing requirements of UL10C, and all weather requiring no seasonal closer adjustment for temperatures ranging from 120 degrees F to -30 degrees F.
5. Spring Power: Continuously adjustable over full range of closer sizes, and providing reduced opening force as required by accessibility codes and standards.
6. Hydraulic Regulation: By tamper-proof, non-critical valves, with separate adjustment for latch speed, general speed, and back check.
7. Pressure Relief Valve (PRV) Technology: Not permitted.
8. Provide stick on templates, special templates, drop plates, mounting brackets, or adapters for arms as required for details, overhead stops, and other door hardware items interfering with closer mounting.

2.19 DOOR TRIM

A. Manufacturers:

1. Scheduled Manufacturer:
   a. Ives

B. Requirements:

1. Provide push plates, push bars, pull plates, pulls, and hands-free reversible door pulls with diameter and length as scheduled.

2.20 PROTECTION PLATES

A. Manufacturers:

1. Scheduled Manufacturer:
   a. Ives

B. Requirements:

1. Provide protection plates with a minimum of 0.050 inch (1 mm) thick, beveled four edges as scheduled. Furnish with sheet metal or wood screws, finished to match plates.
2. Sizes plates 2 inches (51 mm) less width of door on single doors, pairs of doors with a mullion, and doors with edge guards. Size plates 1 inch (25 mm) less width of door on pairs without a mullion or edge guards.
3. At fire rated doors, provide protection plates over 16 inches high with UL label.

2.21 OVERHEAD STOPS AND OVERHEAD STOP/HOLDERS

A. Manufacturers:

1. Scheduled Manufacturers:
   a. Glynn-Johnson

B. Requirements:

1. Provide overhead stop at any door where conditions do not allow for a wall stop or floor stop presents tripping hazard.

2.22 DOOR STOPS AND HOLDERS

A. Manufacturers:

1. Scheduled Manufacturer:
   a. Ives

B. Provide door stops at each door leaf:

1. Provide wall stops wherever possible. Provide concave type where lockset has a push button of thumbturn.
2. Where a wall stop cannot be used, provide universal floor stops.
3. Where wall or floor stop cannot be used, provide overhead stop.
4. Provide roller bumper where doors open into each other and overhead stop cannot be used.

2.23 HINGE PIN DOOR STOP

A. Manufacturers and Products:

1. Scheduled Manufacturer and Product:
   a. Ives 74/75 Series

2. Acceptable Manufacturers and Products:
   a. No Substitute
   b. Door Saver III
   c. Don Jo 1513/1518

B. Requirements:

1. Provide hinge pin door stops in carbon steel.
2. Removable bushings shall accommodate 1/4-inch to 5/16-inch diameter hinge pins (74 series).
3. Removable bushings shall accommodate 5/16-inch to 3/8-inch diameter hinge pins (75 series).
4. Shall be capable of adjustment from 40-degrees to 180-degrees.

2.24 THRESHOLDS, SEALS, DOOR SWEEPS, AUTOMATIC DOOR BOTTOMS, AND GASKETING

A. Manufacturers:

1. Scheduled Manufacturer:
   a. Zero International

B. Requirements:

1. Provide thresholds, weather-stripping, and gasketing systems as specified and per architectural details. Match finish of other items.
2. Smoke- and Draft-Control Door Assemblies: Where smoke- and draft-control door assemblies are required, provide door hardware that meets requirements of assemblies tested according to UL 1784 and installed in compliance with NFPA 105.
3. Provide door sweeps, seals, astragals, and auto door bottoms only of type where resilient or flexible seal strip is easily replaceable and readily available.
4. Size thresholds 1/2 inch (13 mm) high by 5 inches (127 mm) wide by door width unless otherwise specified in the hardware sets or detailed in the drawings.

2.25 SILENCERS

A. Manufacturers:

1. Scheduled Manufacturer:
   a. Ives

B. Requirements:

1. Provide "push-in" type silencers for hollow metal or wood frames.
2. Provide one silencer per 30 inches (762 mm) of height on each single frame, and two for each pair frame.
3. Omit where gasketing is specified.

2.26 ROLLER LATCHES

A. Manufacturers:

1. Scheduled Manufacturer:
   a. Ives

B. Requirements:

1. Provide roller latches with 4-7/8 inches (124 mm) strike at single doors to fit ANSI frame prep. If dummy levers are used in conjunction with roller latch mount roller latch at a height as to not interfere with proper mounting and height of dummy lever.
2. Provide roller latches with 2-1/4 inches (57 mm) full lip strike at pair doors. Mount roller in top rail of each leaf per manufacturer's template.

2.27 COAT HOOKS

A. Manufacturers:

1. Scheduled Manufacturer:
   a. Ives

B. Provide coat hooks as specified.

PART 3 - EXECUTION

3.1 EXAMINATION

A. Prior to installation of hardware, examine doors and frames, with Installer present, for compliance with requirements for installation tolerances, labeled fire-rated door assembly construction, wall and floor construction, and other conditions affecting performance. Verify doors, frames, and walls have been properly reinforced for hardware installation.

B. Examine roughing-in for electrical power systems to verify actual locations of wiring connections before electrified door hardware installation.

C. Submit a list of deficiencies in writing and proceed with installation only after unsatisfactory conditions have been corrected.

3.2 INSTALLATION

A. Mount door hardware units at heights to comply with the following, unless otherwise indicated or required to comply with governing regulations.

1. Standard Steel Doors and Frames: ANSI/SDI A250.8.
2. Custom Steel Doors and Frames: HMMA 831.
3. Interior Architectural Wood Flush Doors: ANSI/WDMA I.S. 1A
4. Installation Guide for Doors and Hardware: DHI TDH-007-20

B. Install door hardware in accordance with NFPA 80, NFPA 101 and provide post-install inspection, testing as specified in section 1.03.E unless otherwise required to comply with governing regulations.

C. Install each hardware item in compliance with manufacturer's instructions and recommendations, using only fasteners provided by manufacturer.

D. Do not install surface mounted items until finishes have been completed on substrate. Protect all installed hardware during painting.

E. Set units level, plumb and true to line and location. Adjust and reinforce attachment substrate as necessary for proper installation and operation.

F. Drill and countersink units that are not factory prepared for anchorage fasteners. Space fasteners and anchors according to industry standards.

G. Install operating parts so they move freely and smoothly without binding, sticking, or excessive clearance.

H. Hinges: Install types and in quantities indicated in door hardware schedule but not fewer than quantity recommended by manufacturer for application indicated.

I. Lock Cylinders:

1. Install construction cores to secure building and areas during construction period.
2. Replace construction cores with permanent cores as indicated in keying section.
3. Furnish permanent cores to Owner for installation.

J. Wiring: Coordinate with Division 26, ELECTRICAL and Division 28 ELECTRONIC SAFETY AND SECURITY sections for:

1. Conduit, junction boxes and wire pulls.
2. Connections to and from power supplies to electrified hardware.
3. Connections to fire/smoke alarm system and smoke evacuation system.
4. Connection of wire to door position switches and wire runs to central room or area, as directed by Architect.
5. Connections to panel interface modules, controllers, and gateways.
6. Testing and labeling wires with Architect's opening number.

K. Key Control System: Tag keys and place them on markers and hooks in key control system cabinet, as determined by final keying schedule.

L. Continuous Hinges: Re-locate the door and frame fire rating labels where they will remain visible so that the hinge does not cover the label once installed.

M. Door Closers & Auto Operators: Mount closers/operators on room side of corridor doors, inside of exterior doors, and stair side of stairway doors from corridors. Mount closers/operators so they are not visible in corridors, lobbies and other public spaces unless approved by Architect.

N. Overhead Stops/Holders: Mount overhead stops/holders on room side of corridor doors, inside of exterior doors, and stair side of stairway doors.

O. Power Supplies: Locate power supplies as indicated or, if not indicated, above accessible ceilings or in equipment room, or alternate location as directed by Architect.

P. Thresholds: Set thresholds in full bed of sealant complying with requirements specified in Division 07 Section "Joint Sealants."

Q. Stops: Provide floor stops for doors unless wall or other type stops are indicated in door hardware schedule. Do not mount floor stops where they may impede traffic or present tripping hazard.

R. Perimeter Gasketing: Apply to head and jamb, forming seal between door and frame.

S. Meeting Stile Gasketing: Fasten to meeting stiles, forming seal when doors are closed.

T. Door Bottoms and Sweeps: Apply to bottom of door, forming seal with threshold when door is closed.

3.3 ADJUSTING

A. Initial Adjustment: Adjust and check each operating item of door hardware and each door to ensure proper operation or function of every unit. Replace units that cannot be adjusted to operate as intended. Adjust door control devices to compensate for final operation of heating and ventilating equipment and to comply with referenced accessibility requirements.

   1. Spring Hinges: Adjust to achieve positive latching when door can close freely from an open position of 30 degrees.
   2. Electric Strikes: Adjust horizontal and vertical alignment of keeper to properly engage lock bolt.
   3. Door Closers: Adjust sweep period to comply with accessibility requirements and requirements of authorities having jurisdiction.

B. Occupancy Adjustment: Approximately three to six months after date of Substantial Completion, examine and readjust each item of door hardware, including adjusting operating forces, as necessary to ensure function of doors and door hardware.

3.4 CLEANING AND PROTECTION

A. Clean adjacent surfaces soiled by door hardware installation.

B. Clean operating items per manufacturer's instructions to restore proper function and finish.

C. Provide final protection and maintain conditions that ensure door hardware is without damage or deterioration at time of Substantial Completion.

3.5 DOOR HARDWARE SCHEDULE

A. The intent of the hardware specification is to specify the hardware for interior and exterior doors, and to establish a type, continuity, and standard of quality. However, it is the door hardware supplier's responsibility to thoroughly review existing conditions, schedules, specifications, drawings, and other Contract Documents to verify the suitability of the hardware specified.

B. Discrepancies, conflicting hardware, and missing items are to be brought to the attention of the architect with corrections made prior to the bidding process. Omitted items not included in a hardware set should be scheduled with the appropriate additional hardware required for proper application.

C. Hardware items are referenced in the following hardware schedule. Refer to the above specifications for special features, options, cylinders/keying, and other requirements.

D. Hardware Sets:

Abbreviation	Name
ADA	Adams Rite Manufacturing Co
GLY	Glynn-Johnson Corp
IVE	H.B. Ives
KNC	K.N. Crowder Mfg. Inc.
LCN	LCN Commercial Division
SCH	Schlage Lock Company
VON	Von Duprin
ZER	Zero International Inc

129068 OPT0415607 Version 1

Hardware Group No. 01

Provide each SGL door(s) with the following:

QTY		DESCRIPTION	CATALOG NUMBER		FINISH	MFR
3	EA	HINGE	5BB1 4.5 X 4.5		652	IVE
1	EA	PUSH PLATE	8200 4" X 16"		630	IVE
1	EA	PULL PLATE	8302 10" 4" X 16"		630	IVE
1	EA	SURFACE CLOSER	4050A RW/PA		689	LCN
1	EA	KICK PLATE	8400 10" X 2" LDW B-CS		630	IVE
1	EA	MOP PLATE	8400 4" X 1" LDW B-CS		630	IVE
1	EA	WALL STOP	WS406/407CCV		630	IVE
3	EA	SILENCER	SR64		GRY	IVE

Hardware Group No. 01A

Provide each SGL door(s) with the following:

QTY		DESCRIPTION	CATALOG NUMBER		FINISH	MFR
3	EA	HINGE	5BB1 4.5 X 4.5		652	IVE
1	EA	PRIVACY LOCK W/ OUTSIDE INDICATOR	L9040 07A 09-544 OS-OCC		626	SCH
1	EA	FSIC CORE	23-030 EV29 S		626	SCH
1	EA	SURFACE CLOSER	4050A RW/PA		689	LCN
1	EA	KICK PLATE	8400 10" X 2" LDW B-CS		630	IVE
1	EA	MOP PLATE	8400 4" X 1" LDW B-CS		630	IVE
1	EA	WALL STOP	WS406/407CCV		630	IVE
3	EA	GASKETING	188SBK		BK	ZER
1	EA	COAT AND HAT HOOK	508		626	IVE

Hardware Group No. 02

Provide each SGL door(s) with the following:

QTY		DESCRIPTION	CATALOG NUMBER		FINISH	MFR
3	EA	HINGE	5BB1 4.5 X 4.5		652	IVE
1	EA	PASSAGE SET	L9010 07A		626	SCH
1	EA	OH STOP	90S		689	GLY
3	EA	SILENCER	SR64		GRY	IVE

Hardware Group No. 04

Provide each SGL door(s) with the following:

QTY		DESCRIPTION	CATALOG NUMBER		FINISH	MFR
3	EA	HINGE	5BB1 4.5 X 4.5		652	IVE
1	EA	CLASSROOM LOCK	L9070T 07A		626	SCH
1	EA	FSIC CORE	23-030 EV29 S		626	SCH
1	EA	SURFACE CLOSER	4050A RW/PA		689	LCN
1	EA	KICK PLATE	8400 10" X 2" LDW B-CS		630	IVE
1	EA	WALL STOP	WS406/407CCV		630	IVE
3	EA	SILENCER	SR64		GRY	IVE

Hardware Group No. 04A

Provide each SGL door(s) with the following:

QTY		DESCRIPTION	CATALOG NUMBER		FINISH	MFR
3	EA	HINGE	5BB1 4.5 X 4.5 NRP		652	IVE
1	EA	CLASSROOM LOCK	L9070T 07A		626	SCH
1	EA	FSIC CORE	23-030 EV29 S		626	SCH
1	EA	SURFACE CLOSER	4050A EDA		689	LCN
1	EA	KICK PLATE	8400 10" X 2" LDW B-CS		630	IVE
1	EA	WALL STOP	WS406/407CCV		630	IVE
3	EA	SILENCER	SR64		GRY	IVE

Hardware Group No. 05

Provide each SGL door(s) with the following:

QTY		DESCRIPTION	CATALOG NUMBER		FINISH	MFR
3	EA	HINGE	5BB1 4.5 X 4.5		652	IVE
1	EA	OFFICE W/SIM RETRACT	L9056T 07A 09-544		626	SCH
1	EA	FSIC CORE	23-030 EV29 S		626	SCH
1	EA	SURFACE CLOSER	4050A RW/PA		689	LCN
1	EA	KICK PLATE	8400 10" X 2" LDW B-CS		630	IVE
1	EA	WALL STOP	WS406/407CCV		630	IVE
3	EA	SILENCER	SR64		GRY	IVE

Hardware Group No. 05A

Provide each SGL door(s) with the following:

QTY		DESCRIPTION	CATALOG NUMBER		FINISH	MFR
3	EA	HINGE	5BB1 4.5 X 4.5		652	IVE
1	EA	OFFICE W/SIM RETRACT	L9056T 07A 09-544		626	SCH
1	EA	FSIC CORE	23-030 EV29 S		626	SCH
1	EA	OH STOP	100S		689	GLY
1	EA	SURFACE CLOSER	4050A RW/PA		689	LCN
1	EA	KICK PLATE	8400 10" X 2" LDW B-CS		630	IVE
3	EA	SILENCER	SR64		GRY	IVE

Hardware Group No. 07

Provide each PR door(s) with the following:

QTY		DESCRIPTION	CATALOG NUMBER		FINISH	MFR
6	EA	HINGE	5BB1 4.5 X 4.5		652	IVE
2	EA	MANUAL FLUSH BOLT	FB458		626	IVE
1	EA	DUST PROOF STRIKE	DP2		626	IVE
1	EA	CLASSROOM LOCK	L9070T 07A		626	SCH
1	EA	FSIC CORE	23-030 EV29 S		626	SCH
1	EA	OH STOP	90S		689	GLY
1	EA	SURFACE CLOSER	4050A RW/PA		689	LCN
2	EA	KICK PLATE	8400 10" X 1" LDW B-CS		630	IVE
1	EA	WALL STOP	WS406/407CCV		630	IVE
2	EA	SILENCER	SR64		GRY	IVE

Hardware Group No. 08

Provide each PR door(s) with the following:

QTY		DESCRIPTION	CATALOG NUMBER		FINISH	MFR
6	EA	HINGE	5BB1 4.5 X 4.5		652	IVE
2	EA	HALF DUMMY TRIM	LT170 07B		630	SCH
2	EA	ROLLER LATCH	RL30		626	IVE
2	EA	SILENCER	SR64		GRY	IVE

Hardware Group No. 09

Provide each PR door(s) with the following:

QTY		DESCRIPTION	CATALOG NUMBER		FINISH	MFR
6	EA	HINGE	5BB1 4.5 X 4.5 NRP		652	IVE
2	EA	MANUAL FLUSH BOLT	FB458		626	IVE
1	EA	DUST PROOF STRIKE	DP2		626	IVE
1	EA	STOREROOM LOCK	L9080T 07A		626	SCH
1	EA	FSIC CORE	23-030 EV29 S		626	SCH
1	EA	OH STOP	90S		689	GLY
1	EA	SURFACE CLOSER	4050A CUSH		689	LCN
2	EA	SILENCER	SR64		GRY	IVE

Hardware Group No. 09A

Provide each SGL door(s) with the following:

QTY		DESCRIPTION	CATALOG NUMBER		FINISH	MFR
3	EA	HINGE	5BB1 4.5 X 4.5		652	IVE
1	EA	STOREROOM LOCK	L9080T 07A		626	SCH
1	EA	FSIC CORE	23-030 EV29 S		626	SCH
1	EA	SURFACE CLOSER	4050A RW/PA		689	LCN
1	EA	KICK PLATE	8400 10" X 2" LDW B-CS		630	IVE
1	EA	WALL STOP	WS406/407CCV		630	IVE
2	EA	SILENCER	SR64		GRY	IVE

Hardware Group No. 09B

Provide each SGL door(s) with the following:

QTY		DESCRIPTION	CATALOG NUMBER		FINISH	MFR
3	EA	HINGE	5BB1 4.5 X 4.5 NRP		652	IVE
1	EA	STOREROOM LOCK	L9080T 07A		626	SCH
1	EA	FSIC CORE	23-030 EV29 S		626	SCH
1	EA	SURFACE CLOSER	4050A CUSH		689	LCN
1	EA	KICK PLATE	8400 10" X 2" LDW B-CS		630	IVE
1	EA	WALL STOP	WS406/407CCV		630	IVE
2	EA	SILENCER	SR64		GRY	IVE

Hardware Group No. 10

Provide each SGL door(s) with the following:

QTY		DESCRIPTION	CATALOG NUMBER		FINISH	MFR
3	EA	HINGE	5BB1 4.5 X 4.5 NRP		630	IVE
1	EA	PANIC HARDWARE	LD-78-EO		626	VON
1	EA	SURFACE CLOSER	4050A SCUSH		689	LCN
1	EA	KICK PLATE	8400 10" X 2" LDW B-CS		630	IVE
1	SET	GASKETING	429AA-S		AA	ZER
1	EA	DOOR SWEEP	39A		A	ZER
1	EA	THRESHOLD	656A-W/HOLES-223		A	ZER

Hardware Group No. 11

Provide each SGL door(s) with the following:

QTY		DESCRIPTION	CATALOG NUMBER		FINISH	MFR
1	EA	CONT. HINGE	112XY		628	IVE
1	EA	PANIC HARDWARE	75-NL-OP-388		626	VON
1	EA	RIM CYLINDER	20-057 ICX		626	SCH
1	EA	FSIC CORE	23-030 EV29 S		626	SCH
1	EA	PUSH/PULL BAR	9190EZHD-10"-NS		630-316	IVE
1	EA	SURFACE CLOSER	4050A SCUSH		689	LCN
1	EA	PA MOUNTING PLATE	4050A-18PA SRT ST-5003		689	LCN
1	EA	PERIMETER GASKETING	BY DOOR MANUFACTURER			
1	EA	THRESHOLD	656A-W/HOLES-223		A	ZER
1	EA	DOOR POSITION SWITCH	BY SECURITY			

Hardware Group No. BP-05

Provide each BP door(s) with the following:

QTY		DESCRIPTION	CATALOG NUMBER		FINISH	MFR
1	EA	BI-PASS TRACK	CCD-493-W - COMPLETE 2 DOOR KIT			KNC
1	EA	FASCIA KIT	CC-441			KNC
2	EA	FLUSH PULL	950		626	IVE

Hardware Group No. CR01

Provide each SGL door(s) with the following:

QTY		DESCRIPTION	CATALOG NUMBER		FINISH	MFR
2	EA	HINGE	5BB1 4.5 X 4.5 NRP		652	IVE
1	EA	ELECTRIC HINGE	5BB1 4.5 X 4.5 CON TW8		652	IVE
1	EA	ELEC FIRE EXIT HARDWARE	RX-78-L-F-07-CON		626	VON
1	EA	RIM CYLINDER	20-057 ICX		626	SCH
1	EA	FSIC CORE	23-030 EV29 S		626	SCH
1	EA	SURFACE CLOSER	4050A EDA		689	LCN
1	EA	WALL STOP	WS406/407CCV		630	IVE
1	EA	GASKETING	188SBK		BK	ZER
1	EA	WIRE HARNESS	CON-LENGTH TO SUIT			SCH
1	EA	WIRE HARNESS	CON-6W			SCH
1	EA	CARD READER	BY SECURITY			
1	EA	POWER SUPPLY	BY SECURITY			
1	EA	DOOR POSITION SWITCH	BY SECURITY			

Hardware Group No. CR01A

Provide each SGL door(s) with the following:

QTY		DESCRIPTION	CATALOG NUMBER		FINISH	MFR
2	EA	HINGE	5BB1 4.5 X 4.5 NRP		652	IVE
1	EA	ELECTRIC HINGE	5BB1 4.5 X 4.5 CON TW8		652	IVE
1	EA	ELEC FIRE EXIT HARDWARE	RX-78-L-F-07-CON		626	VON
1	EA	RIM CYLINDER	20-057 ICX		626	SCH
1	EA	FSIC CORE	23-030 EV29 S		626	SCH
1	EA	SURFACE CLOSER	4050A RW/PA		689	LCN
1	EA	WALL STOP	WS406/407CCV		630	IVE
1	EA	GASKETING	188SBK		BK	ZER
1	EA	WIRE HARNESS	CON-LENGTH TO SUIT			SCH
1	EA	WIRE HARNESS	CON-6W			SCH
1	EA	CARD READER	BY SECURITY			
1	EA	POWER SUPPLY	BY SECURITY			
1	EA	DOOR POSITION SWITCH	BY SECURITY			

Hardware Group No. CR02

Provide each SGL door(s) with the following:

QTY		DESCRIPTION	CATALOG NUMBER		FINISH	MFR
2	EA	HINGE	5BB1 4.5 X 4.5		652	IVE
1	EA	ELECTRIC HINGE	5BB1 4.5 X 4.5 CON TW8		652	IVE
1	EA	EU MORTISE LOCK	L9092TEU 07A RX CON 12/24 VDC		626	SCH
1	EA	FSIC CORE	23-030 EV29 S		626	SCH
1	EA	SURFACE CLOSER	4050A RW/PA		689	LCN
1	EA	KICK PLATE	8400 10" X 2" LDW B-CS		630	IVE
1	EA	WALL STOP	WS406/407CCV		630	IVE
1	EA	SILENCER	SR64		GRY	IVE
1	EA	WIRE HARNESS	CON-LENGTH TO SUIT			SCH
1	EA	WIRE HARNESS	CON-6W			SCH
1	EA	CARD READER	BY SECURITY			
1	EA	POWER SUPPLY	BY SECURITY			
1	EA	DOOR POSITION SWITCH	BY SECURITY			

Hardware Group No. CR02A

Provide each SGL door(s) with the following:

QTY		DESCRIPTION	CATALOG NUMBER		FINISH	MFR
2	EA	HINGE	5BB1 4.5 X 4.5 NRP		652	IVE
1	EA	ELECTRIC HINGE	5BB1 4.5 X 4.5 CON TW8		652	IVE
1	EA	EU MORTISE LOCK	L9092TEU 07A RX CON 12/24 VDC		626	SCH
1	EA	ELEC FIRE EXIT HARDWARE	RX-78-L-F-07-CON		626	VON
1	EA	FSIC CORE	23-030 EV29 S		626	SCH
1	EA	SURFACE CLOSER	4050A EDA		689	LCN
1	EA	WALL STOP	WS406/407CCV		630	IVE
1	EA	SILENCER	SR64		GRY	IVE
1	EA	WIRE HARNESS	CON-LENGTH TO SUIT			SCH
1	EA	WIRE HARNESS	CON-6W			SCH
1	EA	CARD READER	BY SECURITY			
1	EA	POWER SUPPLY	BY SECURITY			
1	EA	DOOR POSITION SWITCH	BY SECURITY			
1	EA	GASKETING	188SBK		BK	ZER

Hardware Group No. CR02B

Provide each SGL door(s) with the following:

QTY		DESCRIPTION	CATALOG NUMBER		FINISH	MFR
2	EA	HINGE	5BB1 4.5 X 4.5 NRP		652	IVE
1	EA	ELECTRIC HINGE	5BB1 4.5 X 4.5 CON TW8		652	IVE
1	EA	EU MORTISE LOCK	L9092TEU 07A RX CON 12/24 VDC		626	SCH
1	EA	FSIC CORE	23-030 EV29 S		626	SCH
1	EA	SURFACE CLOSER	4050A CUSH		689	LCN
1	EA	SILENCER	SR64		GRY	IVE
1	EA	WIRE HARNESS	CON-LENGTH TO SUIT			SCH
1	EA	WIRE HARNESS	CON-6W			SCH
1	EA	CARD READER	BY SECURITY			
1	EA	POWER SUPPLY	BY SECURITY			
1	EA	DOOR POSITION SWITCH	BY SECURITY			

Hardware Group No. CR02C

Provide each SGL door(s) with the following:

QTY		DESCRIPTION	CATALOG NUMBER		FINISH	MFR
2	EA	HINGE	5BB1 4.5 X 4.5		652	IVE
1	EA	ELECTRIC HINGE	5BB1 4.5 X 4.5 CON TW8		652	IVE
1	EA	EU MORTISE LOCK	L9092TEU 07A RX CON 12/24 VDC		626	SCH
1	EA	FSIC CORE	23-030 EV29 S		626	SCH
1	EA	SURFACE CLOSER	4050A RW/PA		689	LCN
1	EA	KICK PLATE	8400 10" X 2" LDW B-CS		630	IVE
1	EA	WALL STOP	WS406/407CCV		630	IVE
1	EA	SILENCER	SR64		GRY	IVE
1	EA	WIRE HARNESS	CON-LENGTH TO SUIT			SCH
1	EA	WIRE HARNESS	CON-6W			SCH
1	EA	CARD READER	BY SECURITY			
1	EA	POWER SUPPLY	BY SECURITY			
1	EA	DOOR POSITION SWITCH	BY SECURITY			
1	EA	GASKETING	8770N		BK	ZER
1	EA	AUTO. DOOR BOTTOM	335		AA	ZER

Hardware Group No. CR03

Provide each PR door(s) with the following:

QTY		DESCRIPTION	CATALOG NUMBER		FINISH	MFR
5	EA	HINGE	5BB1 4.5 X 4.5		652	IVE
1	EA	ELECTRIC HINGE	5BB1 4.5 X 4.5 CON TW8		652	IVE
2	EA	MANUAL FLUSH BOLT	FB458		626	IVE
1	EA	DUST PROOF STRIKE	DP2		626	IVE
1	EA	EU MORTISE LOCK	L9092TEU 07A RX CON 12/24 VDC		626	SCH
1	EA	FSIC CORE	23-030 EV29 S		626	SCH
2	EA	OH STOP	90S		689	GLY
2	EA	SURFACE CLOSER	4050A RW/PA		689	LCN
2	EA	KICK PLATE	8400 10" X 1" LDW B-CS		630	IVE
1	EA	WIRE HARNESS	CON-LENGTH TO SUIT			SCH
1	EA	WIRE HARNESS	CON-6W			SCH
1	EA	CARD READER	BY SECURITY			
1	EA	POWER SUPPLY	BY SECURITY			
1	EA	REQUEST TO EXIT	BY SECURITY			
1	EA	DOOR POSITION SWITCH	BY SECURITY			
1	EA	GASKETING	8770N		BK	ZER
2	EA	AUTO. DOOR BOTTOM	355		AA	ZER
1	EA	ASTRAGAL	339		BK	ZER

Hardware Group No. CR04

Provide each SGL door(s) with the following:

QTY		DESCRIPTION	CATALOG NUMBER		FINISH	MFR
1	EA	CONT. HINGE	112XY TWP CON		628	IVE
1	EA	ELEC PANIC HARDWARE	RX-QEL-75-NL-OP-388-CON 24 VDC		626	VON
1	EA	RIM CYLINDER	20-057 ICX		626	SCH
1	EA	FSIC CORE	23-030 EV29 S		626	SCH
1	EA	PUSH/PULL BAR	9190EZHD-10"-NS		630-316	IVE
1	EA	SURFACE CLOSER	4050A SCUSH		689	LCN
1	EA	PA MOUNTING PLATE	4050A-18PA SRT ST-5003		689	LCN
1	EA	PERIMETER GASKETING	BY DOOR MANUFACTURER			
1	EA	THRESHOLD	656A-W/HOLES-223		A	ZER
1	EA	WIRE HARNESS	CON-LENGTH TO SUIT			SCH
1	EA	WIRE HARNESS	CON-6W			SCH
1	EA	CARD READER	BY SECURITY			
1	EA	POWER SUPPLY	BY SECURITY			
1	EA	DOOR POSITION SWITCH	BY SECURITY			

Hardware Group No. CR05

Provide each PR door(s) with the following:

QTY		DESCRIPTION	CATALOG NUMBER		FINISH	MFR
1	EA	CONT. HINGE	112XY		628	IVE
2	EA	CONT. HINGE	112XY TWP CON		628	IVE
2	EA	MANUAL FLUSH BOLT	FB458		626	IVE
1	EA	DUST PROOF STRIKE	DP2		626	IVE
1	EA	MORTISE DEADLATCH	4510 X 3080-MD-3 X 3080-MD-9		628	ADA
1	EA	MORTISE CYLINDER	20-062 ICX X K510-711 36-082-018 36-082-037		626	SCH
1	EA	FSIC CORE	23-030 EV29 S		626	SCH
1	EA	ELECTRIC STRIKE	7101		628	ADA
2	EA	SURFACE CLOSER	4050A CUSH		689	LCN
2	EA	PA MOUNTING PLATE	4050A-18PA SRT ST-5003		689	LCN
1	EA	PERIMETER GASKETING	BY DOOR MANUFACTURER			
1	EA	THRESHOLD	656A-W/HOLES-223		A	ZER
1	EA	CARD READER	BY SECURITY			
1	EA	POWER SUPPLY	BY SECURITY			
1	EA	REQUEST TO EXIT	BY SECURITY			
1	EA	DOOR POSITION SWITCH	BY SECURITY			

Hardware Group No. CR06

Provide each PR door(s) with the following:

QTY		DESCRIPTION	CATALOG NUMBER		FINISH	MFR
2	EA	CONT. HINGE	112XY TWP CON		628	IVE
1	EA	ELEC PANIC HARDWARE	RX-7547-EO-CON		626	VON
1	EA	ELEC PANIC HARDWARE	RX-QEL-7547-NL-OP-388-CON 24 VDC		626	VON
1	EA	RIM CYLINDER	20-057 ICX		626	SCH
1	EA	FSIC CORE	23-030 EV29 S		626	SCH
2	EA	PUSH/PULL BAR	9190EZHD-10"-NS		630-316	IVE
2	EA	SURFACE CLOSER	4050A SCUSH		689	LCN
2	EA	PA MOUNTING PLATE	4050A-18PA SRT ST-5003		689	LCN
1	EA	PERIMETER GASKETING	BY DOOR MANUFACTURER			
1	EA	THRESHOLD	656A-W/HOLES-223		A	ZER
2	EA	WIRE HARNESS	CON-LENGTH TO SUIT			SCH
2	EA	WIRE HARNESS	CON-6W			SCH
1	EA	CARD READER	BY SECURITY			
1	EA	POWER SUPPLY	BY SECURITY			
1	EA	DOOR POSITION SWITCH	BY SECURITY			

Hardware Group No. 00.1
All hardware by door system manufacturer.
Coordinate with Specification Section 10 22 19.

Provide each SGL door(s) with the following:

QTY		DESCRIPTION	CATALOG NUMBER	FINISH	MFR
1	EA	FLOOR PIVOT			
1	EA	OVERHEAD CONCEALED CLOSER – HOLD OPEN 90 DEGREE			
1	EA	LADDER PULL 48” (EACH SIDE)		MATTE BLACK	
1	EA	FLOOR STOP			

Hardware Group No. 00.1A
All hardware by door system manufacturer, coordinate final selections with security.
Coordinate with Specification Section 10 22 19.

Provide each SGL door(s) with the following:

QTY		DESCRIPTION	CATALOG NUMBER	FINISH	MFR
1	EA	FLOOR PIVOT			
1	EA	OVERHEAD CONCEALED CLOSER – NON HOLD OPEN			
1	EA	LADDER PULL 48” (EACH SIDE)		MATTE BLACK	
1	EA	FLOOR STOP			
1	EA	MAGNETIC LOCK- FAIL SAFE			
1	EA	MOTION SENSOR			
1	EA	PUSH-TO-EXIT BUTTON & SIGNAGE			
1	EA	DOOR POSITION SWITCH			
1	EA	CARD READER			

1	EA	POWER SUPPLY			

Hardware Group No. 00.2
All hardware by door system manufacturer.
Coordinate with Specification Section 10 22 19.

Provide each SGL door(s) with the following:

QTY		DESCRIPTION	CATALOG NUMBER	FINISH	MFR
1	EA	FLOOR PIVOT			
1	EA	OVERHEAD CONCEALED CLOSER – HOLD OPEN 90 DEGREE			
1	EA	STAGGERED BOTTOM LOCKING LADDER PULL 48”/38”		MATTE BLACK	
1	EA	RIM CYLINDER			
1	EA	FSIC CORE			
1	EA	THUMBTURN- ADA COMPLIANT			
1	EA	FLOOR STOP			
1	EA	DUST PROOF FLOOR STRIKE			

Hardware Group No. 00.3
All hardware by door system manufacturer, coordinate final selections with security.
Coordinate with Specification Section 10 22 19.

Provide each SGL door(s) with the following:

QTY		DESCRIPTION	CATALOG NUMBER	FINISH	MFR
1	EA	FLOOR PIVOT			
1	EA	OVERHEAD CONCEALED CLOSER – NON HOLD OPEN			
1	EA	LADDER PULL 48”/MECHANICAL PANIC BAR- LATCH @ HEAD		MATTE BLACK	
1	EA	RIM CYLINDER			
1	EA	FSIC CORE			
1	EA	OVERHEAD ELECTRIC STRIKE- FAIL SAFE			
1	EA	FLOOR STOP			
1	EA	DOOR POSITION SWITCH			
1	EA	CARD READER			
1	EA	POWER SUPPLY			

END OF SECTION 08 71 00

SECTION 08 80 00 - GLAZING

PART 1 - GENERAL

1.1 SECTION INCLUDES

A. Glass for glazing aluminum-framed curtainwalls, storefronts and entrance doors.

B. Glass for glazing non-fire-rated steel doors.

C. Glazing accessories.

1.2 RELATED SECTIONS

A. Section 08 11 13 – Steel Doors and Frames.

B. Section 08 41 13 – Aluminum Framed Entrance Doors.

C. Section 08 44 13 – Glazed Aluminum Curtain Walls.

D. Section 08 88 16 – Fire Rated Glazing.

1.3 REFERENCES

A. ANSI Z 97.1 – American National Standard for Safety Glazing Materials Used in Buildings, Safety Performance Specifications and Methods of Test.

B. ASTM C 864 – Standard Specification for Dense Elastomeric Compression Seal Gaskets, Setting Blocks, and Spacers.

C. ASTM C 1036 - Standard Specification for Flat Glass.

D. ASTM C 1048 - Standard Specification for Heat-Treated Flat Glass--Kind HS, Kind FT Coated and Uncoated Glass.

E. ASTM E 330 - Standard Test Method for Structural Performance of Exterior Windows, Curtain Walls, and Doors by Uniform Static Air Pressure Difference.

F. ASTM E 773 – Standard Test Method for Accelerated Weathering of Sealed Insulating Glass Units

G. ASTM E 774 - Standard Specification for the Classification of the Durability of Sealed Insulating Glass Units

H. CPSC 16CFR-1201 - Safety Standard for Architectural Glazing Materials.

I. GANA (GM) - GANA Glazing Manual; Glass Association of North America.

J. GANA (SM) – FGMA Sealant Manual; Glass Association of North America.

K. SIGMA TM-3000 – Glazing Guidelines for Sealed Insulating Glass Units; Sealed Insulating Glass Manufacturers Association.

1.4 PERFORMANCE REQUIREMENTS

A. Provide fully tempered safety glass with horizontal tempering as required by the requirements of the 2020 Building Code of New York State, Section 2406 – Safety Glazing, for glazing specific hazardous locations (including doors). Provide annealed, heat strengthened, or fully tempered glass for remaining conditions in accordance with manufacturer's recommendations.

B. Select thickness of exterior glass to withstand dead loads and wind loads acting normal to plane of glass at design pressures calculated in accordance with applicable code, 30 psf (service load). Wind speed 113 mph; Risk Category II; Wind exposure category B.
   1. Test in accordance with ASTM E 330.
   2. Limit glass deflection to 1/200 or flexure limit of glass, whichever is less, with full recovery of glazing materials.
   3. Thicknesses listed are minimum.

1.5 SUBMITTALS

A. Comply with Section 01 30 00 - Submittal Procedures.

B. Product Data on Glass Types: Provide structural, physical and environmental characteristics, size limitations, special handling or installation requirements.

C. Samples: Submit two samples 12x12 inch in size of glass units for each type specified, showing coloration and design.

D. Samples: Submit 2 inch long bead of glazing sealant, color as selected.

E. Manufacturer's Certificate: Certify that glass products meet or exceed specified requirements.

1.6 QUALITY ASSURANCE

A. Perform Work in accordance with aluminum framing manufacturer's requirements, GANA Glazing Manual, FGMA Sealant Manual, and SIGMA TM-3000 Glazing Guidelines for glazing installation methods.

B. Installer Qualifications: Company specializing in performing the work of this section with minimum five years documented experience.

C. Mock-Ups:
1. Provide mock-ups specified in Section 08 44 13 – Glazed Aluminum Curtain Walls.
2. Construct Mock-up at location where directed.
3. Mock-up may remain as part of the Work.

1.7 PRE-INSTALLATION MEETING

A. Convene one week before starting work of this Section.

1.8 ENVIRONMENTAL REQUIREMENTS

A. Do not install glazing when ambient temperature is less than 50 degrees F.

B. Maintain minimum ambient temperature before, during and 24 hours after installation of glazing compounds.

1.9 WARRANTY

A. Provide manufacturer's five (5) year warranty to include coverage for sealed glass units from seal failure, interpane dusting or misting, and replacement of same.

B. Provide manufacturer's five (5) year warranty to include coverage for delamination of laminated glass and replacement of same.

PART 2 - PRODUCTS

2.1 FLAT GLASS MANUFACTURERS

A. Acceptable Manufacturer:
1. Viracon, Inc., 800 Park Drive, Owatonna, MN 55060, Toll Free (800) 533-2080 Web Site: www.viracon.com
2. Substitutions: Refer to 01 60 00 – Product Requirements.

2.2 SINGLE PANE GLASS MATERIALS

A. Clear Single Pane Safety Glass: Clear, fully tempered with horizontal tempering.
1. Comply with ASTM C 1048, Condition A uncoated, Type 1 transparent flat, Class 1 Quality q3 glazing select.
2. Comply with ANSI Z97.1.
3. 1/4 inch thick.

2.3 SEALED INSULATING GLASS MATERIALS

A. Manufacturer:
   1. Viracon, Inc., 800 Park Drive, Owatonna, MN 55060, Toll Free (800) 533-2080 Web Site: www.viracon.com

B. Insulated Vision Glass Units: Double Pane with edge seal.
   1. Viracon Insulating HS/HS Glass consisting of:
      a. Outer pane: 1/4” Clear HS; Low-E Coating: VNG-4022 #2 Surface
      b. Airspace: 1/2” VTS Spacer, Argon Fill
      c. Inner pane: 1/4” Clear HS
   2. Comply with ASTM E 774 and E773.
   3. Total unit thickness of 1 inch.

C. Insulated Frosted Vision Glass Units: Double Pane with edge seal.
   1. Viracon Insulating Glass consisting of:
      a. Outer pane: 1/4” Clear HS; Low-E Coating: VNG-4022 #2 Surface
      b. Airspace: 1/2” VTS Spacer, Argon Fill
      c. Inner pane: 1/4” Clear HS V1092 SIM ACID ETCH Viraspan Print #3058 #3
   2. Comply with ASTM E 774 and E773.
   3. Total unit thickness of 1 inch.

D. Insulated Spandrel Glass Units: Double Pane with edge seal.
   1. Viracon Insulating HS/HS consisting of:
      a. Outer pane: 1/4” clear HS; Low-E Coating: VNG-4022 #2 Surface
      b. Airspace: 1/2” VTS Spacer, Argon Fill
      c. Inner pane: 1/4” Clear V951 White #3
   2. Comply with ASTM E 774 and E773.
   3. Purge interpane space with dry hermetic air.
   4. Total unit thickness of 1 inch.

E. Edge Seal Construction: Sealed Insulating Glass Units to be double sealed with a primary seal of VTS and a secondary seal of silicone

2.4 GLAZING COMPOUNDS

A. Manufacturers:
   1. Dow Corning Corp.
   2. GE Silicones.
   3. Pecora Corp.

B. Acrylic Sealant: Single component, solvent curing, non-bleeding, cured Shore A hardness of 15 to 25; as selected color.

C. Silicone Structural Glazing Sealant: Single component; solvent curing; capable of water immersion without loss of properties; non-bleeding; non-staining; ASTM C 920, Type S, Grade NS, Class 25, Use G, A; cured Shore A hardness of 30 to 35; as selected color.

2.5 GLAZING ACCESSORIES

A. Manufacturers:
1. Norton Performance Plastics Corp.
2. Pecora Corp.
3. Tremco Inc.

B. Setting Blocks: Neoprene, 80 to 90 Shore A durometer hardness, ASTM C 864 Option I. Length of 0.1 inch for each square foot of glazing or a minimum of 4 inch x width of glazing rabbet space minus 1/16 inch x height to suit glazing method and pane weight and area.

C. Spacer Shims: Neoprene, 50 to 60 Shore A durometer hardness, ASTM C 864 Option I. Minimum 3 inch long x one half the height of the glazing stop x thickness to suit application, self adhesive on one face.

D. Glazing Gaskets: Resilient silicone extruded shape to suit glazing channel retaining slot; ASTM C 864 Option I; black color.

PART 3 - EXECUTION

3.1 EXAMINATION

A. Verify that openings for glazing are correctly sized and within tolerance.

B. Verify that surfaces of glazing channels or recesses are clean, free of obstructions that may impede moisture movement, weeps are clear, and ready to receive glazing.

3.2 PREPARATION

A. Clean contact surfaces with solvent and wipe dry.

B. Seal porous glazing channels or recesses with substrate compatible primer or sealer.

3.3 INSTALLATION

A. Install glass in accordance with Quality Assurance article in Part 1 of this Section.

B. Install glass in aluminum-framed storefront and doors in accordance with framing system manufacturer’s requirements.

3.4 INSTALLATION – INTERIOR WET METHOD (COMPOUND AND COMPOUND)

A. Install glazing resting on setting blocks. Install applied stop and center pane by use of spacer shims at 24 inch centers, kept 1/4 inch below sight line.

B. Locate and secure glazing pane using glazers' clips.

C. Fill gaps between glazing and stops with acrylic glazing compound until flush with sight line. Tool surface to straight line.

3.5 MANUFACTURER'S FIELD SERVICES

A. Glass product manufacturers to provide field surveillance of the installation of their products.

B. Monitor and report installation procedures and unacceptable conditions.

3.6 CLEANING

A. Remove glazing materials from finish surfaces.

B. Remove labels after work is complete.

C. Clean glass and adjacent surfaces.

3.7 PROTECTION

A. Protect installed glass from damage during construction.

B. Protect installed glass from contact with contaminating substances resulting from construction operations.

C. Remove and replace glass that is broken, chipped, cracked, abraded, or damaged in other ways during construction period, including natural causes, accidents, and vandalism.

3.8 SCHEDULE

A. Aluminum-Framed Curtain Walls: Insulating vision glass units, insulating spandrel glass units, insulating frosted glass units, and insulating frosted spandrel glass units, where indicated. Safety glass where required. Framing system per manufacturer's installation methods. Combination gasket glazed and structural silicone butt glazed, where indicated.

B. Aluminum-Framed Exterior Doors: Insulating vision glass units. Safety glass. Framing system manufacturer' gasket glazed installation method.

C. Fire-Rated Steel Doors: Refer to Section 08 88 16.

END OF SECTION 08 80 00

SECTION 08 83 00 - FRAMELESS MIRRORS

PART 1 - GENERAL

1.1 SECTION INCLUDES

A. Glass mirrors, frameless.

1.2 REFERENCES

A. GANA (GM) - GANA Glazing Manual; Glass Association of North America.

B. GANA (TIPS) - Mirrors Handle with Extreme Care: Tips for the Professional on the Care and Handling of Mirrors; National Association of Mirror Manufacturers.

1.3 SUBMITTALS

A. See Section 01 33 00 - Administrative Requirements, for submittal procedures.

B. Product Data on Mirror Types and Mirror Clips: Provide structural, physical and environmental characteristics, size limitations, special handling or installation requirements.

C. Manufacturer's Certificate: Certify that mirrors meet or exceed specified requirements.

D. Warranty: Submit manufacturer warranty and ensure that forms have been completed in Owner's name and registered with manufacturer.

1.4 QUALITY ASSURANCE

A. Perform Work in accordance with GANA Glazing Manual for glazing installation methods.

B. Fabricate, store, transport, receive, install, and clean mirrors in accordance with GANA recommendations.

1.5 ENVIRONMENTAL REQUIREMENTS

A. Do not install mirrors when ambient temperature is less than 50 degrees F.

1.6 WARRANTY

A. See Section 01 77 00 - Closeout Submittals, for additional warranty requirements.

B. Provide five year manufacturer warranty for reflective coating on mirrors and replacement of same.

PART 2 - PRODUCTS

2.1 MANUFACTURERS

A. Mirrors:
1. Binswanger Mirror/ACI Distribution: www.binswangerglass.com.
2. Guardian Industries Corporation: www.guardianglass.com.
3. Gardner Glass Products: www.gardnerglass.com.
4. Lenoir Mirror Co: www.lenoirmirror.com.
5. Substitutions: See Section 01 60 00 - Product Requirements.

2.2 MATERIALS

A. Mirror Glass: Clear float type with copper and silver coating, organic overcoating, arrised edges, 1/4 inch thick minimum, tempered.
1. Sizes as noted on Drawings.

2.3 GLAZING ACCESSORIES

A. Mirror Holders: “Doug Mockett” MA4-SSS 1” mirror holder. Website: www.mockett.com; Tel.: 800-523-1269.

PART 3 - EXECUTION

3.1 EXAMINATION

A. Verify that openings for mirrored glazing are correctly sized and within tolerance.

3.2 INSTALLATION - GENERAL

A. Install mirrors in accordance with GANA recommendations.

B. Set mirrors plumb and level, free of optical distortion.

C. Set mirrors with edge clearance free of surrounding construction including countertops or backsplashes.

D. Frameless Mirrors: Set mirrors with mirror holders. Anchor rigidly to wall construction.

3.3 CLEANING

A. Remove labels after Work is complete.

B. Clean mirrors and adjacent surfaces.

END OF SECTION 08 83 00

SECTION 08 84 00 – INSULATED METAL GLAZING PANELS

PART 1- GENERAL

1.1 SCOPE

A. Insulated metal glazing panels for use at aluminum storefront and curtainwall systems where indicated on the drawings.

B. Panels shall consist of metal laminated to stabilizer substrates with an insulating core material. Panels are designed to be glazed into a window system or curtain wall system.

1.2 RELATED SECTIONS

A. Section 08 41 13 – Aluminum-Framed Entrance Doors.

B. Section 08 44 13 – Glazed Aluminum Curtain Walls.

C. Section 08 80 00 – Glazing.

1.3 QUALITY ASSURANCE

A. Manufacturer shall have a minimum of 15 years experience in the manufacturing of this type of panel.

B. Provide all insulated metal glazing panels from a single source.

C. Field measurements shall be taken prior to the manufacturing and or cutting.

1.4 SUBMITTALS

A. Submit product data under provisions of Section 01 33 00, including description of materials, components, fabrication, finishes.

B. Submit manufacturer's samples of standard materials, finishes, colors, and textures.
   1. Submit three (3) each, samples 3"x 5"

1.5 WARRANTY

A. Provide manufacture's standard limited warranty document executed by an authorized company official.

B. Panel manufacturer shall warrant the panels, it supplies will be free from defects in material and workmanship for a period of two (2) years from substantial completion.

C. Panel manufacturer shall warrant that the painted finish will not chalk, crack or peel for a period of twenty (20) years from substantial completion.

1.6 PRODUCT DELIVERY, STORAGE & HANDLING

A. Materials will be delivered to the site in an undamaged condition. Use care in handling and hoisting of panels during transportation and at jobsite. All panels and component parts to be stored above grade, on pallets or blocking, out of contact with the ground under protective covers, inside the building, or in storage trailers, so as to prevent damage, warping, bending, or condensation from forming between the panels.

B. Prefinished panel exteriors shall be protected with strippable vinyl masking during manufacture, delivery, storage, and installation. Follow manufacturer's recommended instructions for the removal of the masking.

C. All damaged panels shall be removed from the site and replaced with new panels at no additional cost to the owner. All materials shall be new and of the best quality. Materials shall be delivered and stored on site in sufficient quantities to allow for the continuity of the work.

D. All materials shall be protected at all times from damage of all kinds, including scratches, dents, stains, and deformation. No damaged materials shall be incorporated into any of the work. Protection during installation shall be the responsibility of the contractor.

PART 2- PRODUCTS

2.1 MANUFACTURERS

A. Columbia Architectural Products Inc., Beltsville, Maryland (301-937-4383)
www.CapMetalPanels.com

2.2 INSULATED METAL GLAZING PANELS

A. Panels are to be 1" nominal thickness.
   1. Face: .040 aluminum.
   2. Finish Color: TBD.
   3. Substrate: 1/8" hardboard.
   4. Core: 5/8" expanded polystyrene (EPS) foam board.
   5. Back: .040 aluminum.

2.3 FABRICATION

A. Panels are to be produced in a controlled environment using state of the art automated laminating equipment. Heated adhesive applied to each surface by an automated reciprocal spray system assuring an even coverage to the exact thickness required for proper adhesion of all parts. Minimum 100 lb. pressure evenly applied with an automated rotary pinch roller to assure a high strength bond.

2.4 ACCESSORIES

A. Moldings, angles or stops as required providing a weather tight installation.

B. Sealants as recommended for use as an infill panel component.

2.5 FINISHES

A. Exposed aluminum surfaces: All exposed surfaces of insulated metal glazing panels shall be finished with Polyvinyl-fluoride system meeting “Kynar 500.” Duranar Fluoropolymer manufacturer’s standard 2-coat thermo-cured system composed of specially formulated inhibitive primer, fluorocarbon color coat with a dry film thickness not less than 1.5 mils, and conforming to AAMA 605.2. Exposed surfaces shall be clean of oils, dirt, and free of blemishes.

B. Color, front and back, shall be black.

PART 3 - EXECUTION

3.1 PREPARATION AND INSPECTION

A. Verify existing wall opening conditions to determine that all conditions required for installation of panels are within tolerances acceptable and are ready to receive the work of this section.

3.2 INSTALLATION

A. The installation contractor and his representatives shall be totally responsible for the installation of the complete panel system.

B. Use only skilled tradesmen and complete all work in strict accordance with the manufacturer’s specifications and recommendations for the installation of the panels and associated components as well as the approved project shop drawings and these specifications.

C. All panels shall be installed with setting blocks in a fixed glazed window system as indicated on shop drawings. Install panels and other components securely in place, with provisions for thermal and structural movement.

D. Exposed surfaces shall be kept clean and free from sealants, metal cuttings, hazardous burrs, and any other foreign materials. Stained, discolored, or damaged panels shall be removed from the site.

E. Perform all glazing operations to completely seal metal to metal contact surfaces. Use sealants as recommended for use as an infill panel component.

3.3 ADJUSTMENTS, PROTECTION, AND CLEANING

A. Clean aluminum surfaces promptly after installation of panels in accordance with the manufacturer's instructions. Exercise extreme caution to avoid damage to finish. Do not use abrasives, caustic, or acid cleaning agents in cleaning surfaces of panels. Thoroughly clean all surfaces of any excess sealant prior to sealant curing, compounds, dirt, handling marks, or other substances by using cleaning agents acceptable to the panel manufacturer. Touch up all scratches, abrasion, blemishes, and other defects in the prefinished metal surface with factory supplied finish materials.

B. Initiate all protection and other precautions required to ensure that panels will be without damage or deterioration (other than normal weathering) at time of acceptance. Send copy of written recommendations for maintenance and protection of panels to the Owner following Substantial Completion of Panel Contract.

END OF SECTION 08 84 00

SECTION 08 88 16 - FIRE-RATED GLAZING

PART 1 - GENERAL

1.1 SUMMARY

A. Section Includes:
   1. Fire-rated glazing materials installed as vision lights in stair tower fire-rated doors.

B. Related Sections include the following:
   1. Section 08 11 13 – Hollow Metal Doors and Frames.
   2. Section 08 80 00 – Glazing.

1.2 REFERENCES

A. American Society for Testing and Materials (ASTM):
   1. ASTM E 119: Fire Tests of Building Construction and Materials.

B. American National Standards Institute (ANSI):
   1. ANSI Z97.1: Standard for Safety Glazing Materials Used in Buildings.

C. Consumer Product Safety Commission (CPSC):
   1. CPSC 16 CFR 1201: Safety Standard for Architectural Glazing Materials.

D. Glass Association of North America (GANA):
   1. GANA – Glazing Manual.
   2. FGMA – Sealant Manual.

E. National Fire Protection Association (NFPA):
   1. NFPA 80: Fire Doors and Windows.

F. Underwriters Laboratories, Inc. (UL):
   1. UL 263 – Fire Tests of Building Construction and Materials.

1.3 PERFORMANCE REQUIREMENTS

A. Fire-rated, clear and wireless glazing material for interior use in fire-rated doors at stair towers with fire rating requirements, providing protection by reducing the radiant and conductive heat transfer.

1.4 SUBMITTALS

A. Comply with requirements of Section 01 33 00.

B. Product data: Submit manufacturer's technical data for each glazing material required, including installation and maintenance instructions.

C. Certificates of compliance from glass and glazing materials manufacturers attesting that glass and glazing materials furnished for project comply with requirements. Separate certification will not be required for glazing materials bearing manufacturer's permanent label designating type and thickness of glass, provided labels represent a quality control program involving a recognized certification agency or independent testing laboratory acceptable to authority having jurisdiction.

D. Product Test Listings: From UL indicating fire-rated glass complies with requirements, based on comprehensive testing of current product.

1.5 QUALITY ASSURANCE

A. Glazing Standards: FGMA Glazing Manual and Sealant Manual.

B. Fire-Resistant Rated Glass: Each lite shall bear permanent, nonremovable label of UL and/or WHI certifying it for use in tested and rated fire resistive assemblies.

1.6 DELIVERY, STORAGE, AND HANDLING

A. Deliver materials to specified destination in manufacturer's or distributor's packaging, undamaged, complete with installation instructions.

B. Product must not be exposed outside the range of -40 degrees F to 120 degrees F during storage or transportation.

C. Store off ground, under cover, protected from weather and construction activities.

D. Do not expose the non-PVB side of glass to UV light.

E. Store sheets of glass vertically. DO NOT lean.

1.7 WARRANTY

A. Provide manufacturer's limited warranty.

PART 2 - PRODUCTS

2.1 FIRE-RATED GLAZING MATERIALS

A. Manufacturer: Pilkington Pyrostop® #60-101 as manufactured by the Pilkington Group and distributed by Technical Glass Products, 8107 Bracken Place SE, Snoqualmie, WA 98065, voice (800.426.0279), e-mail tgp.sales@allegion.com, Web site www.fireglass.com.

B. Composition: Composed of multiple sheets of "Optiwhite" high visible light transmission glass laminated with an intumescent interlayer.

C. Properties:
   1. Thickness: 7/8 inch.
   2. Approximate Weight: 10.86 lbs./sq. ft.

3. Approximate Visible Transmission: 87 percent.
4. Fire-rating: 60 minutes.
5. Impact Safety Resistance: ANSI Z97.1 and CPSC 16CFR1201 (Cat. I and II).

D. Permanently label each piece of Pilkington Pyrostop with fire rating classified and labeled by UL for 60 minutes when tested in accordance with ASTM E 119 and UL 263.

2.2 GLAZING COMPOUND FOR FIRE-RATED GLAZING MATERIALS

A. Glazing Tape: Closed cell polyvinyl chloride (PVC) foam, coiled on release paper over adhesive on two sides, maximum water absorption by volume of 2 percent, designed for compression of 25 percent to effect an air and vapor seal.

B. .Silicone Sealant: One-part neutral curing silicone, medium modulus sealant, Type S; Grade NS; Class 25 with additional movement capability of 50 percent in both extension and compression (total 100 percent); Use (Exposure) NT; Uses (Substrates) G, A, and O as applicable. Available Products:
1. Dow Corning 795 - Dow Corning Corp.
2. Silglaze-II 2800 - General Electric Co.
3. Spectrem 2 - Tremco Inc.

C. Setting Blocks: Hardwood or calcium silicate; glass width by 4 inches by 3/16 inch thick.

D. Spacers: Neoprene or other resilient blocks of 40 to 50 Shore A durometer hardness, adhesive-backed on one face only, tested for compatibility with specified glazing compound.

E. Cleaners, Primers, and Sealers: Type recommended by manufacturer of glass and gaskets.

2.3 FABRICATION

A. Fabricate glass and other glazing products in sizes required to glaze openings indicated for Project, with edge and face clearances, edge and surface conditions, and bite complying with recommendations of product manufacturer and referenced glazing standard as required to comply with system performance requirements.

PART 3 - EXECUTION

3.1 EXAMINATION

A. Examine glass framing, with glazier present, for compliance with the following:
1. Manufacturing and installation tolerances, including those for size, squareness, offsets at corners.
2. Minimum required face or edge clearances.
3. Observable edge damage or face imperfections.

B. Do not proceed with glazing until unsatisfactory conditions have been corrected.

C. Clean glazing channels and other framing members receiving glass immediately before glazing. Remove coatings that are not firmly bonded to substrates.

3.2 INSTALLATION (GLAZING)

A. Comply with referenced GANA standards and instructions of manufacturers of glass, glazing sealants, and glazing compounds.

B. Protect glass from edge damage during handling and installation. Inspect glass during installation and discard pieces with edge damage that could affect glass performance.

C. Cut glazing tape to length and set against permanent stops, flush with sight lines to fit openings exactly, with stretch allowance during installation.

D. Place setting blocks located at quarter points of glass with edge block no more than 6-inches from corners.

E. Glaze vertically into labeled fire-rated metal frames with the same fire rating as glass and push against tape for full contact at perimeter of pane or unit.

F. Place glazing tape on free perimeter of glazing in same manner described above.

G. Do not remove protective edge tape.

H. Install removable stop and secure without displacement of tape.

I. Do not pressure glaze.

J. Knife trim protruding tape.

K. Apply cap bead of silicone sealant along void between the stop and the glazing, to uniform line, with bevel to form watershed away from glass. Tool or wipe sealant surface smooth.

L. Provide minimum 3/16 inch edge clearance.

M. Install in vision panels in fire-rated doors to requirements of NFPA 80.

N. Install so that appropriate UL and Pilkington Pyrostop® markings remain permanently visible.

3.3 PROTECTION AND CLEANING

A. Protect glass from contact with contaminating substances resulting from construction operations. Remove any such substances by method approved by glass manufacturer.

B. Wash glass on both faces not more than four days prior to date scheduled for inspections intended to establish date of substantial completion. Wash glass by method recommended by glass manufacturer.

END OF SECTION 08 88 16

SECTION 09 00 00 - INTERIOR COLOR AND MATERIAL SPECIFICATION

PART 1 - GENERAL

1.1 RELATED SECTIONS

A. Section 06 20 00 – Finish Carpentry and Architectural Millwork

B. Section 09 29 00 – Gypsum Board Assemblies

C. Section 09 51 00 – Suspended Acoustical Ceiling

D. Section 09 65 13 – Resilient Stair Treads and Accessories

E. Section 09 65 19 – Resilient Floor Tile and Accessories

F. Section 09 91 23 – Paints and Coatings

PART 2 - PRODUCTS

Refer to the Interior Color & Material Specification document included in the following pages of this section, and to the Related Sections listed in 1.1 above.

PART 3 – EXECUTION

Refer to the Interior Color & Material Specification document included in the following pages of this section, and to the Related Sections listed in 1.1 above.

INTERIOR COLOR & MATERIAL SPECIFICATIONS

Orange & Rockland
390 West Route 59
Village of Spring Valley, NY

ISSUED FOR: BUILDING DEPARTMENT FILING & BIDDING
DATE: 4.28.25

S:\1JOBS\ORANGE & ROCKLAND\spring valley-ny\5593 New Exec Building\07-Color & Materials\WO 5593 O&R Spring Valley_SVOC New Office Addition _ 4.28.25.doc

INTERIOR COLOR AND MATERIAL SPECIFICATIONS ONLY

ATTIC STOCK FOR ALL MATERIALS NOTED
NOTE: ATTIC STOCK TO BE IN FULL UNOPEN BOXES AND UNOPEN CONTAINERS AND CLEARLY MARKED FOR CLIENT

1. EACH STYLE/COLOR OF CARPET TILE: FULL CARTONS FROM 5% OF OVERALL ORDERED PRODUCT
2. EACH STYLE/COLOR OF LVT FLOORING: FULL CARTONS FROM 5% OF OVERALL PRODUCT ORDERED
3. STANDARD OVERALL PAINT COLOR: FOUR GALLONS
4. EACH TYPE/COLOR OF ACCENT PAINT: ONE GALLON
5. **GC TO CONFIRM ATTIC STOCK QUANTITIES WITH CLIENT PRIOR TO ORDERING**

FLOORING

1. INSTALLER TO FOLLOW THE RECOMMENDED INSTALLATION GUIDELINES AS REQUIRED FOR ALL FLOOR MATERIALS
2. PREPARE ALL CONCRETE FLOORS PROPERLY FOR INSTALLATION OF ALL NEW FLOORING MATERIALS NOTED BELOW INCLUDING BUT NOT LIMITED TO FLASH PATCHING AND/OR SEALING OR LEVELING.

CARPET TILE

1. INSTALLATION OF CARPET TILE: GLUE DOWN
2. REFER TO CM PLAN FOR DIRECTION OF CARPET TILE
3. REFER TO CM PLAN FOR LOCATION OF VARYING STYLES AND/OR VARYING COLOR OF CARPET TILES SELECTED
4. CARPET TILE INSTALLATION TO BE COORDINATED WITH INSTALLATION OF GLASS PARTITION SYSTEM IN OFFICE FRONTS AS APPLICABLE. GC TO COORDINATE WITH ALL TRADES, INCLUDING PORCELAIN TILE INSTALLATION, METAL EDGE AND/OR REDUCER REQUIRED AT TRANSITIONS OF TILE AND CARPET TILE, LUXURY VINYL TILE AND CARPET TILE, AND TILE AND VCT/RUBBER TILE.
5. SNS INTERFACE REP.: CHARLIE TRAINOR charlie.trainor@interface.com
   M: 973.715.4669

	CT- 1	CARPET TILE	INTERFACE COLLECTION: ETCHED EARTH COLLECTION STYLE: EE714 COLOR: 103445 STRATA SIZE: 25cm x 1m (9.845” x 39.38”) PILE HEIGHT: 0.15” (3.8mm) INSTALLATION METHOD: ASHLAR
	CT-2	CARPET TILE	INTERFACE COLLECTION: ETCHED EARTH COLLECTION STYLE: EE711 COLOR: 103462 FOSSIL SIZE: 50cm x 50m (19.69” x 19.69”) PILE HEIGHT: 0.13” (3.3mm) INSTALLATION METHOD: MONOLITHIC
	CT-3	CARPET TILE	INTERFACE COLLECTION: ETCHED EARTH COLLECTION STYLE: EE713 COLOR: TBD SIZE: 1m x 1m (39.38” x 39.38”) PILE HEIGHT: 0.19” (4.8mm) INSTALLATION METHOD: QUARTER TURN
	CT-4	CARPET TILE	INTERFACE COLLECTION: ETCHED EARTH COLLECTION STYLE: EE713 COLOR: TBD SIZE: 1m x 1m (39.38” x 39.38”) PILE HEIGHT: 0.19” (4.8mm) INSTALLATION METHOD: QUARTER TURN
	VINYL COMPOSITION TILE 1. FOLLOW ALL MANUFACTURERS WRITTEN INSTRUCTIONS INCLUDING BUT NOT LIMITED TO POST INSTALLATION/INITIAL CLEANING 2. SNS TARKETT – JOHNSONITE REP: ROBERT ROSSELLI robert.rosselli@tarkett.com CELL# 973.866.1545		
	VCT-1	VINYL COMPOSITION TILE	TARKETT VCT COLOR: 1374 CHARCOAL SIZE: 12” x 12” x 1/8”

	SDT-1	STATIC DISSIPATIVE TILE	TARKETT PRODUCT: iQ GRANIT SD COLOR: SIZE: 2' x 2' x 2mm THICK *PROVIDE COPPER GROUNDING COIL **PRODUCT # 1256727** & TILE ADHESIVE "**TARKETT 906 CONDUCTIVE ADHESIVE COVERAGE**" FOR A COMPLETE INSTALLATION*
	LUXURY VINYL TILE & SHEET VINYL FLOORING 1. CUT TILE AS REQUIRED 2. FOLLOW ALL MANUFACTURERS COMPLETE DETAILED WRITTEN INSTRUCTIONS ON WEBSITE FOR RESILIENT & SHEET VINYL INSTALLATION OF AND MAINTENANCE OF MATERIAL PRIOR TO MOVE IN. 3. TEST FOR MOISTURE IN SUBSTRATE AS WELL AS INTERNAL RELATIVE HUMIDITY TEST AND CALCIUM CHLORIDE TEST AS REQUIRED BY INSTALLATION INSTRUCTIONS PRIOR TO INSTALLING FLOOR. PREPARE FLOOR PROPERLY BASED ON TEST RESULTS PRIOR TO INSTALLING ANY OF THIS MATERIAL 4. EXTEND FLOORING UNDER ALL MILLWORK 5. INSTALLATION OF LVT TO BE FULL SPREAD, DIRECT GLUE ADHESIVE 6. SNS INTERFACE REP.: CHARLIE TRAINOR charlie.trainor@interface.com M: 973.715.4669		
	LVT-1	LUXURY VINYL TILE	INTERFACE - LVT COLLECTION: EARTHEN FORMS COLLECTION PATTERN: ON GRAIN 4.5mm COLOR: A03302 EUROPEAN WALNUT SIZE: 25cm x 1m (9.845" x 39.38") THICKNESS: 4.5mm INSTALLATION: ASHLAR

WOOD FLOORING IN EXECUTIVE BOARD ROOM #313

1. FOLLOW MANUFACTURER'S **INSTALLATION INSTRUCTIONS** FOR SUBFLOOR MOISTURE TESTING, MATERIAL ACCLIMATION, MAINTENANCE, ETC.
2. PLEASE USE THE FOLLOWING GUIDELINES FOR JOBSITE EVALUATION:
   - ACCEPTABLE TEMPERATURE RANGE: 55F-85F DEGREES [FAHRENHEIT]
   - ACCEPTABLE RELATIVE HUMIDITY [RH] RANGE: 25%-75% RH
   - ACCEPTABLE LEVELNESS TOLERANCE: NO MORE THAN 1/4" VARIANCE IN 10' RADIUS
   - ACCEPTABLE DRYNESS TOLERANCE:
     A. CONCRETE SLAB: ASTM F2170 IN-SITU PROBE READINGS OF 85% OR LOWER
     B. CONCRETE SLAB: ASTM F1869 VAPOR TRANSMISSION RATE OF 5LBS/1000SF PER 24 HOUR PERIOD OR LESS.
     C. WOODEN SUBFLOOR: MOISTURE CONTENT [MC] OF 12% MC OR LOWER 5. ACCEPTABLE ALKALINITY RANGE: PH READINGS OF 7-10
3. ALWAYS FOLLOW THE REQUIREMENTS OF RECOMMENDED ADHESIVE MANUFACTURER FOR ACCEPTABLE SUBSTRATES, MOISTURE VAPOR, AND ALKALINITY TOLERANCES, TROWEL SIZES, SPREAD RATES, WORKING TIME AND OPEN TIME.
4. PROVIDE COORDINATING ADA COMPLIANT WOOD FLOOR TRANSITIONS BETWEEN WOOD FLOORING AND VARIOUS FLOOR FINISHES AND HEIGHTS

WDF-1	WOOD FLOORING	NUWUD THE HERRINGBONE COLLECTION COLOR/PATTERN: SUTTON PLACE SKU#: E35405HGB SIZE: 5.31" X 21.26" THICKNESS: 10mm EDGE: MICRO BEVEL EDGE INSTALLATION: GLUE DOWN INSTALLTION PATTERN: HERRINGBONE

NEW PORCELAIN TILE FLOORING

1. PREPARE SUBFLOOR AND WALLS AS REQUIRED TO RECEIVE NEW FLOOR TILE AND WALL TILE.
2. EXTEND FLOORING UNDER ALL MILLWORK AS APPLICABLE
3. CONTACT LATICRETE REP. FOR RECOMMENDED INSTALLATION MATERIALS. LATICRETE REP.: ERIC SCHWEITZER egschweitzer@laticrete.com
4. REFER TO MANUFACTURER'S INSTALLATION GUIDELINES FOR FLOOR AND WALL TILE.
5. REFER TO THE TCNA GUIDE (TILE COUNCIL OF NORTH AMERICA) FOR INFORMATION REGARDING LARGE FORMAT TILE INSTALLATION.
6. FLOOR SUBSTRATES FOR THE INSTALLATION OF LARGE THIN PORCELAIN TILE MUST BE PREPARED TO A FLOOR FLATNESS (Ff) OF 50. MAXIMUM VARIATION IN THE SUBSTRATE IS NOT TO EXCEED 1/8" IN 10' FROM THE REQUIRED PLANE, AND NO MORE THAN 1/16" IN 12" WHEN MEASURED FROM HIGH POINTS.
7. COMPLETE MORTAR COVERAGE BETWEEN PORCELAIN UNIT AND SUBSTRATE IS REQUIRED: APPLY NOTCHED COATS OF THIN-SET MORTAR TO BOTH THE BACK OF THE LARGE TILE AND THE SUBSTRATE
8. BRICK PATTERN LAYOUT TO BE INSTALLED WITH A 33% OFFSET
9. NASCO STONE + TILE REP.: JOSEPH TAWIL joseph@nascostonetile.com
10. STUDIO COLLECTION REP.: ELIZABETH CANNON ecannon@ciconsultllc.com

	PT-1	FLOOR TILE IN LOBBIES	NASCO STONE + TILE PATTERN: EURO COLOR: TBD FINISH: MATTE SIZE: 36" X 36" NOM. THICKNESS: 3/8" (9mm) RECOMMENDED GROUT JOINT: 1/8"
	FT-1	FLOOR TILE IN 1ST & 2ND FLOOR TOILET ROOMS AND AS NOTED	STUDIO COLLECTION PATTERN: TERRAZZO TODAY COLOR: SP04-01M FINISH: MATTE SIZE: 12" X 24" NOM. THICKNESS: 8mm RECOMMENDED GROUT JOINT: 1/8"
	FT-B	COORDINATING TILE BASE	STUDIO COLLECTION PATTERN: TERRAZZO TODAY COLOR: SP04-01M FINISH: MATTE SIZE: 3x 24 BULLNOSE BASE THICKNESS: 8mm RECOMMENDED GROUT JOINT: 1/8" ***NOTE: NO FT-B TILE BASE ON WALLS WITH WALL TILE***

	FT-2	FLOOR TILE IN 3RD FLOOR TOILET ROOMS	NASCO STONE + TILE PATTERN: ARCADIA COLOR: BEIGE FINISH: MATTE SIZE: 12” X 24” NOM. THICKNESS: 3/8” (9mm) RECOMMENDED GROUT JOINT: 1/8”
	FT-B2	COORDINATING TILE BASE	NASCO STONE + TILE PATTERN: ARCADIA COLOR: BEIGE FINISH: MATTE SIZE: 3” X 24” BULLNOSE BASE THICKNESS: 3/8” (9mm) RECOMMENDED GROUT JOINT: 1/8” ***NOTE: NO FT-B2 TILE BASE ON WALLS WITH WALL TILE**
		GROUT FOR TILES ABOVE	LATICRETE SPECTRALOCK PRO – PREMIUM GROUT COLOR: TBD
	FT-3	FLOOR TILE IN PRESIDENT’S BATHROOM	NASCO STONE + TILE PATTERN: EURO COLOR: TBD FINISH: MATTE SIZE: 12” X 24” NOM. THICKNESS: 3/8” (9mm) RECOMMENDED GROUT JOINT: 1/8”
		GROUT FOR TILES ABOVE	LATICRETE SPECTRALOCK PRO – PREMIUM GROUT COLOR: TBD
	FT-J	FLOOR TILE IN JANITOR’S CLOSET	STUDIO COLLECTION PATTERN: TERRAZZO TODAY COLOR: SP04-01M FINISH: MATTE SIZE: 12” X 24” NOM. THICKNESS: 8mm RECOMMENDED GROUT JOINT: 1/8”

	FB-J	FLOOR TILE BASE IN JANITOR'S CLOSET	STUDIO COLLECTION PATTERN: TERRAZZO TODAY COLOR: SP04-01M FINISH: MATTE SIZE: 3x 24 BULLNOSE BASE THICKNESS: 8mm RECOMMENDED GROUT JOINT: 1/8"
	WALL TILE IN TOILET ROOMS		
	WT-1M	WALL TILE IN 1ST & 2ND FLOOR TOILET ROOMS AT VANITY (MEN'S ROOM)	TILE BAR PATTERN: PAINT COLOR: AZUR FINISH: POLISHED SIZE: 3" x 16" THICKNESS: 8.5mm PROVIDE COORDINATING BULLNOSE TRIM TILE AT ALL OUTSIDE CORNERS AND EDGES AS REQUIRED FOR A COMPLETE INSTALLATION GROUT JOINT: 1/8"
	WT-1W	WALL TILE IN 1ST & 2ND FLOOR TOILET ROOMS AT VANITY (WOMEN'S ROOM)	TILE BAR PATTERN: PAINT COLOR: TERRACOTTA FINISH: POLISHED SIZE: 3" x 16" THICKNESS: 8.5mm PROVIDE COORDINATING BULLNOSE TRIM TILE AT ALL OUTSIDE CORNERS AND EDGES AS REQUIRED FOR A COMPLETE INSTALLATION GROUT JOINT: 1/8"
	WT-2	WALL TILE IN 1ST & 2ND FLOOR TOILET ROOMS ON WET WALLS AT TOILETS	TILE BAR PATTERN: PAINT COLOR: BIANCO FINISH: POLISHED SIZE: 3" x 16" THICKNESS: 8.5mm PROVIDE COORDINATING BULLNOSE TRIM TILE AT ALL OUTSIDE CORNERS AND EDGES AS REQUIRED FOR A COMPLETE INSTALLATION GROUT JOINT: 1/8"

	WT-3M	WALL TILE IN 3RD FLOOR TOILET ROOMS AT VANITY (MEN'S ROOM)	NASCO STONE + TILE PATTERN: MOXY COLOR: VERDE FINISH: MATTE SIZE: 2.3" X 9.7" THICKNESS: 3/8" PROVIDE COORDINATING BULLNOSE TRIM TILE AT ALL OUTSIDE CORNERS AND EDGES AS REQUIRED FOR A COMPLETE INSTALLATION GROUT JOINT: 1/8"
	WT-3W	WALL TILE IN 3RD FLOOR TOILET ROOMS AT VANITY (WOMEN'S ROOM)	NASCO STONE + TILE PATTERN: MOXY COLOR: TERRACOTTA FINISH: MATTE SIZE: 2.3" X 9.7" THICKNESS: 3/8" PROVIDE COORDINATING BULLNOSE TRIM TILE AT ALL OUTSIDE CORNERS AND EDGES AS REQUIRED FOR A COMPLETE INSTALLATION GROUT JOINT: 1/8"
	WT-4	WALL TILE IN 3RD FLOOR TOILET ROOMS ON WET WALLS AT TOILETS	STUDIO COLLECTION PATTERN: SIDELIGHTS COLOR: RU04-01G FINISH: GLOSSY SIZE: 3" X 12" THICKNESS: 3/8" PROVIDE COORDINATING BULLNOSE TRIM TILE AT ALL OUTSIDE CORNERS AND EDGES AS REQUIRED FOR A COMPLETE INSTALLATION GROUT JOINT: 1/8"
	WT-5	WALL TILE IN PRESIDENT'S BATHROOM	NASCO STONE + TILE PATTERN: EURO TATAMI COLOR: TBD FINISH: MATTE SIZE: 12" X 24" NOM. THICKNESS: 3/8" (9mm) RECOMMENDED GROUT JOINT: 1/8"

	WT-B	WALL TILE BASE	NASCO STONE + TILE PATTERN: EURO COLOR: TBD FINISH: MATTE SIZE: 3” X 36” NOM. THICKNESS: 3/8” (9mm) RECOMMENDED GROUT JOINT: 1/8”
	WT-6	WALL TILE IN PRESIDENT’S SHOWER	NASCO STONE + TILE PATTERN: LOVE BARS COLOR: TBD FINISH: GLOSSY SIZES: 3” x 12” PROVIDE COORDINATING BULLNOSE TRIM TILE AT ALL OUTSIDE CORNERS AND EDGES AS REQUIRED FOR A COMPLETE INSTALLATION GROUT JOINT: 3/16”
		GROUT FOR TILE ABOVE	LATICRETE SPECTRALOCK PRO PREMIUM GROUT COLOR: TBD
BASES – SOLID WOOD BASE & RESILIENT BASES			
	PAINTED SOLID WOOD BASE 1. PROVIDE PAINTED WOOD BASE AS NOTED ON COLOR & MATERIAL DRAWINGS 2. PROVIDE MITERED CORNERS/RETURNS AT ALL OUTSIDE EXPOSED CORNERS **3. WOOD BASE TO BE PAINTED TO MATCH WALL COLOR IN SEMI-GLOSS FINISH**		
	WB-1	PAINTED SOLID WOOD BASE AS NOTED ON CM PLAN	HEIGHT: 4” HIGH PROFILE: STRAIGHT PROFILE SOLID WOOD BASE WIDTH: 3/4” SHEEN: SEMI GLOSS *NOTE ANY ACCENT COLORS ON CM PLAN – PAINTED WOOD BASE TO MATCH COLOR OF WALL IN SEMI-GLOSS FINISH*

	RESILIENT WALL BASES 1. ALL BASES TO BE VINYL AND 1/8" GAUGE AS APPLICABLE 2. REFER TO 'TIGHTLOCK' WALL BASE MAINTENANCE AND INSTALLATION INSTRUCTIONS ON WEBSITE 3. BASES WITH CARPET TILE TO BE STRAIGHT PROFILE (FOR CARPET) 4. BASES WITH VINYL FLOORING TO BE COVED 5. SNS TARKETT – JOHNSONITE REP: ROBERT ROSSELLI robert.rosselli@tarkett.com CELL# 973.866.1545		
	B-1	VINYL WALL BASE	TARKETT - JOHNSONITE TIGHTLOCK CARPET BASE COLOR: TBD HEIGHT: 4.5" PROFILE: STRAIGHT
	B-2	VINYL WALL BASE	TARKETT - JOHNSONITE TIGHTLOCK CARPET BASE COLOR: TBD HEIGHT: 4.5" PROFILE: STRAIGHT
	B-3	VINYL WALL BASE	TARKETT - JOHNSONITE TIGHTLOCK RESILIENT BASE COLOR: TBD HEIGHT: 4.375" PROFILE: COVED
	REDUCERS, LEVELERS AND TRANSITIONS **ADA COMPLIANT STONE SADDLES & NOSING** 1. ALL SADDLES AND TRANSITIONS TO BE ADA COMPLIANT 2. NOTE THICKNESS OF ALL MATERIALS TO ACCOMMODATE ALL/ANY TRANSITIONS. GC TO COORDINATE WITH VARIOUS FLOOR MATERIALS 3. PROFILE OF VINYL REDUCERS AND LEVELERS TO BE TAILORED TO EACH TRANSITION BETWEEN DISSIMILAR FLOOR MATERIALS		
	RS-1	REDUCER STRIPS AND/OR TRANSITIONS	JOHNSONITE COLOR: PROFILE: "X" AS REQUIRED FOR TRANSITIONS BETWEEN VARYING FLOOR MATERIALS.
	M-1	METAL EDGE TRANSITION	SCHLUTER OR EQUAL PROFILE: RENO-U FINISH: SATIN ANODIZED ALUMNINUM HEIGHT: TBD* *SIZE & PROFILE TO ACCOMMODATE TRANSITION BETWEEN VARIOUS MATERIAL THICKNESSES

	STONE SADDLE	ADA COMPLIANT STONE SADDLES	STONESOURCE OR EQUAL COLOR: TBD FINISH: HONED PROFILE TO BE ADA COMPLIANT
	M-2	METAL EDGE TRANSITION AT STAIRWELL AS NOTED	SCHLUTER OR EQUAL PROFILE: RENO-U FINISH: SATIN ANODIZED ALUMNINUM HEIGHT: TBD* *SIZE & PROFILE TO ACCOMMODATE TRANSITION BETWEEN VARIOUS MATERIAL THICKNESSES
WALLS			
	PAINTED WALLS, SURFACES, MISC COLUMNS AS NOTED 1. PREPARE ALL PAINTED SURFACES AS REQUIRED FOR PAINT WITH APPROPRIATE SANDING, PREPARATION, PRIMERS ETC. **2. FINAL ACCENT PAINT COLORS & LOCATIONS TO BE DETERMINED** 3. BENJAMIN MOORE REP.: DIANA RATTAZZI diana.rattazzi@benjaminmoore.com #914.261.8603		
	P-1	STANDARD PAINT	BENJAMIN MOORE COLOR: TBD SHEEN: EGGSHELL
	P-A	ACCENT PAINT	BENJAMIN MOORE COLOR: TBD SHEEN: EGGSHELL *NOTE: FINAL ACCENT PAINT LOCATIONS TO BE DETERMINED
	WALLCOVERING 1. PREPARE ALL WALLS AS REQUIRED TO RECEIVE NEW WALLCOVERING 2. FOLLOW MANUFACTURER'S INSTALLATION INSTRUCTIONS 3. KOROSEAL REP.: TINA ROUZAIRE trouzaire@koroseal.com		

	WC-1	WALLCOVERING	***FOR PRICING ONLY – FINAL PATTERN & COLOR TBD*** KOROSEAL - TAKUMI PATTERN: REFINED GRASSCLOTHS CONTENT: ARROWROOT COLOR: TAK-FA01-02 WIDTH: 36” ROLL SIZE: 15m (16.4 yd) BACKING: NON-WOVEN PATTERN MATCH: RANDOM MATCH
	WC-2	WALLCOVERING	***FOR PRICING ONLY – FINAL PATTERN & COLOR TBD*** KOROSEAL – TAKUMI PATTERN: INTRICATE WEAVES CONTENT: PAPERWEAVE COLOR: TAK-EC01-02 WIDTH: 36” ROLL SIZE: 15m (16.4 yd) BACKING: NON-WOVEN PATTERN MATCH: RANDOM MATCH
	WC-3	WALLCOVERING	***FOR PRICING ONLY – FINAL PATTERN & COLOR TBD*** KOROSEAL PATTERN: INSIGHT COLOR: TBD WIDTH: 52”-54” WEIGHT: 20 oz/lyd TYPE II VINYL BACKING: OSNABURG PATTERN MATCH: REVERSE
	WC-4	WALLCOVERING	***FOR PRICING ONLY – FINAL PATTERN & COLOR TBD*** KOROSEAL – TAKUMI PATTERN: INTRICATE WEAVES CONTENT: PAPERWEAVE COLOR: TAK-EC01-02 WIDTH: 36” ROLL SIZE: 15m (16.4 yd) BACKING: NON-WOVEN PATTERN MATCH: RANDOM MATCH

	WC-T	WALLCOVERING IN TOILET ROOMS AS NOTED	KOROSEAL PATTERN: LINSEY COLOR: COTTON SE21-02 WIDTH: 52”-54” WEIGHT: 20 oz/lyd TYPE II VINYL BACKING: OSNABURG PATTERN MATCH: REVERSE HANG RANDOM MATCH
	WC-T2	WALLCOVERING IN TOILET ROOMS AS NOTED	KOROSEAL PATTERN: LINSEY COLOR: COTTON SE21-02 WIDTH: 52”-54” WEIGHT: 20 oz/lyd TYPE II VINYL BACKING: OSNABURG PATTERN MATCH: REVERSE HANG RANDOM MATCH
	DECORATIVE ACOUSTICAL WALL PANELS IN EXECUTIVE BOARD ROOM # 313 1. REFER TO ELEVATION A/A-6 FOR LAYOUT OF PANELS 2. FOLLOW MANUFACTURER’S INSTALLATION INSTRUCTIONS & USE MANUFACTURER’S RECOMMENDED ADHESIVES 3. PROVIDE ALL COMPONENTS NECESSARY FOR A COMPLETE INSTALLATION 4. CARNEGIE REP: MICHELE SILVA msilva@carnegiefabrics.com		

	AWP-1	ACOUSTICAL WALL PANELS	***FOR PRICING ONLY – FINAL PATTERN & COLOR TBD*** CARNEGIE XOREL ARTFORM SHAPES & FABRICS: • (6) panels of PEAK D8/SMALL in NEXUS 907 • (6) panels of PEAK D8/SMALL in METEOR 2031 • (6) panels of PEAK A8/SMALL in NEXUS 910 • (6) panels of PEAK A12/ LARGE in ZIPPER 51 • (6) panels of PEAK B12/MEDIUM in SAHARA MATTE 632 • (6) panels of PEAK B8/SMALL in HAZE 13 • (6) panels of PEAK D8/MEDIUM in METEOR 2031 • (6) panels of PEAK B8/SMALL in TWINE 30 • (6) panels of PEAK B8/SMALL in METEOR 742 SUBSTRATE: QUIET-CORE EDGE TREATMENT: STRAIGHT EDGE INSTALLATION METHOD: QUICK GRAB (WALL-MOUNTED) TOTAL PANELS: 54 TOTAL BOXES: 9
	BACKSPLASH TILE IN CAFETERIA & PANTRY 1. NASCO STONE + TILE REP.: JOSEPH TAWIL joseph@nascostonetile.com		
	BS-1	BACKSPLASH TILE IN PANTRY	NASCO STONE + TILE PATTERN: LOVE BARS COLOR: TBD FINISH: GLOSSY SIZES: 3” x 12” GROUT JOINT: 3/16”
		GROUT FOR TILE ABOVE	LATICRETE SPECTRALOCK PRO PREMIUM GROUT COLOR: TBD
	NEW PAINTED DOORS & FRAMES 1. DO NOT PAINT ALUMINUM FRAMES OF GLASS PARTITION SYSTEMS 2. REFER TO DOOR SCHEDULE FOR COMPLETE INFORMATION 3. PAINT HOLLOW METAL FRAME SAME COLOR AS ADJACENT WALL IN SEMI-GLOSS FINISH UNLESS OTHERWISE NOTED 4. SPLIT PAINTING OF HOLLOW METAL FRAMES AS REQUIRED		

	PD-1	PAINTED DOORS AND HM FRAMES	BENJAMIN MOORE COLOR: TBD SHEEN: SEMIGLOSS W/P-1 PAINTED WALLS
	PD- A	PAINTED DOORS AND HM FRAMES	BENJAMIN MOORE COLOR: TBD SHEEN: SEMIGLOSS W/P-A PAINTED WALLS

CEILINGS

1. REFER TO REFLECTED CEILING PLAN FOR COMPLETE INFORMATION ON CEILING TYPES AND CEILING HEIGHTS

ACOUSTICAL ACCESSIBLE CEILING TILE AND GRID SYSTEM

1. PROVIDE ALL COMPONENTS NECESSARY FOR A COMPLETE INSTALLATION FOR EACH TYPE OF CEILING SYSTEM SPECIFIED BELOW
2. SNS ARMSTRONG REP: THOMAS LULL talull@armstrongceilings.com

	ACT-1	ACOUSTICAL CEILING TILE AND GRID SYSTEM	ARMSTRONG CEILING STYLE: CALLA #2824 SIZE: 24” x 24” x 1” COLOR: WHITE EDGE PROFILE: SQUARE TEGULAR SUSPENSION SYSTEM: SUPRAFINE TEE GRID SYSTEM: 9/16” COLOR: WHITE
	ACT-2	ACOUSTICAL CEILING TILE AND GRID SYSTEM IN TOILET ROOMS & AS NOTED	ARMSTRONG CEILING STYLE: ULTIMA HEALTH ZONE #1936 SIZE: 24” x 24” x 3/4” COLOR: WHITE EDGE PROFILE: SQUARE TEGULAR SUSPENSION SYSTEM: SUPRAFINE TEE GRID SYSTEM: 9/16” COLOR: WHITE

	ACT-3	ACOUSTICAL CEILING TILE AND GRID SYSTEM	ARMSTRONG CEILING STYLE: CALLA #2824 SIZE: 24” x 24” x 1” COLOR: WHITE EDGE PROFILE: SQUARE TEGULAR SUSPENSION SYSTEM: SILHOUETTE XL 1/8” REVEAL TEE GRID SYSTEM: 9/16” COLOR: WHITE
	ACT-4	ACOUSTICAL CEILING TILE AND GRID SYSTEM	ARMSTRONG CEILING STYLE: DUNE #1772 SIZE: 24” x 24” x 5/8” COLOR: WHITE EDGE PROFILE: SQUARE LAY-IN SUSPENSION SYSTEM: PRELUDE XL TEE GRID SYSTEM: 15/16” COLOR: WHITE

WOOD VENEER GRILLE CEILING

1. PROVIDE ALL COMPONENTS NECESSARY FOR A COMPLETE INSTALLATION FOR EACH TYPE OF CEILING SYSTEM SPECIFIED BELOW
2. FOLLOW MANUFACTURER’S INSTALLATION GUIDELINES
3. COORDINATE WITH LIGHT FIXTURES
4. WHEN INSTALLED, THERE WILL BE A 1” REVEAL BETWEEN END PANELS
5. PANELS MUST BE CLIMATIZED PRIOR TO INSTALLATION. RELATIVE HUMIDITY BETWEEN 25% AND 55%, AND TEMPURATURE BETWEEN 50˚F AND 86˚F MUST BE MAINTAINED.
6. SNS ARMSTRONG REP: THOMAS LULL talull@armstrongceilings.com

	ABC-1	WOOD GRILLE CEILING	***FOR PRICING ONLY – FINAL PATTERN & COLOR TBD*** ARMSTRONG CEILINGS PRODUCT: WOODWORKS GRILLE FORTE STANDARD PANEL CONFIGURATION: 12" WIDE, ¾" SLAT LENGTH: 4' AND 6' LENGTHS SLAT HEIGHT: 3" SLAT HEIGHT WITH 3 SLATS PER PANEL SPACE BETWEEN SLATS: 3 ¼" ITEM #S : 6333L4S15NQW & 6333L6S15NQW FINISH: QUARTERED WALNUT VENEER (NQW) ADD ACOUSTICAL INFILL PANEL: CALLA SQUARE LAY-IN PANEL ITEM# 2820BK SUSPENSION SYSTEM: PRELUDE XL HD MAIN BEAMS & PRELUDE XL CROSS TEES COLOR: BLACK PROVIDE ALL COMPONENTS NECESSARY FOR A COMPLETE INSTALLATION
	PAINTED GYP BOARD CEILINGS		
	PC-1	PAINTED GYP BD CEILINGS, SOFFITS & FACIAS (WITH P-1 WALLS)	BENJAMIN MOORE COLOR: TBD SHEEN: FLAT
MILLWORK 1. REFER TO MILLWORK ELEVATIONS & DETAILS			
	LAMINATE 1. WILSONART REP: MIGUEL MOSQUERA miguel.mosquera@wilsonart.com		
	L-1	MILLWORK LAMINATE	WILSONART COLOR: FOSSIL SHALE D504-60 FINISH: MATTE
	L-2	MILLWORK LAMINATE	WILSONART COLOR: NEW AGE OAK 7938-38 FINISH: FINE VELVET FINISH

	L-3	MILLWORK LAMINATE	WILSONART - TRACELESS COLOR: SLATE VELVET 15507 FINISH: ULTRA MATTE
	L-4	MILLWORK LAMINATE	FUNDERMAX HIGH PRESSURE THIN LAMINATE PANELS COLOR: 0811 FH CELLO
	L-5	MILLWORK LAMINATE	***FOR PRICING ONLY – FINAL PATTERN & COLOR TBD*** FUNDERMAX HIGH PRESSURE THIN LAMINATE PANELS COLOR: 0811 FH CELLO
	SOLID SURFACE TOPS 2. REFER TO MILLWORK DETAILS 3. INCLUDES SPLASHES AS NOTED ON MILLWORK DETAIL 4. COORDINATE ANY REQUIRED SEAMING IN SOLID SURFACE WITH MILLWORK BELOW 5. SUBMIT SHOP DRAWINGS FOR REVIEW AND APPROVAL 6. WILSONART REP: MIGUEL MOSQUERA miguel.mosquera@wilsonart.com		
	QZ-1	QUARTZ SURFACE	WILSONART QUARTZ COLOR: VICENTIA Q4063 STD. FINISH: POLISHED SLAB SIZE: 65” X 130” THICKNESS: 2 CM EDGE: REFER TO DETAILS
	QZ-2	QUARTZ SURFACE	WILSONART QUARTZ COLOR: LAZIO Q1018 STD. FINISH: POLISHED SLAB SIZE: 65” X 130” THICKNESS: 2 CM EDGE: REFER TO DETAILS
	QZ-3	QUARTZ SURFACE	WILSONART QUARTZ COLOR: NOVA SERRANA Q4068 STD. FINISH: POLISHED SLAB SIZE: 65” X 130” THICKNESS: 2 CM EDGE: REFER TO DETAILS

	QZ-4	QUARTZ SURFACE	WILSONART QUARTZ COLOR: ENCHANTED ROCK Q4041 STD. FINISH: POLISHED SLAB SIZE: 65” X 130” THICKNESS: 2 CM EDGE: REFER TO DETAILS
	QZ-5	QUARTZ SURFACE	***FOR PRICING ONLY – FINAL PATTERN & COLOR TBD*** WILSONART QUARTZ COLOR: ENCHANTED ROCK Q4041 STD. FINISH: POLISHED SLAB SIZE: 65” X 130” THICKNESS: 2 CM EDGE: REFER TO DETAILS
	SS-1	SOLID SURFACE	WILSONART SOLID SURFACE COLOR: FROSTY WHITE 1573SL FINISH: MATTE SHEET SIZE: 30” x 144” THICKNESS: ½” EDGE: REFER TO DETAILS
TOILET PARTITIONS AND URINAL SCREENS 1. PROVIDE ALL COMPONENTS NECESSARY FOR A COMPLETE INSTALLATION			
	TP-1	1ST & 2ND FLOOR TOILET PARTIONS AND URINAL SCREENS	ASI – GLOBAL PARTITIONS INTEGRATED PRIVACY- STAINLESS STEEL PRODUCT# 16221 BRACKET MATERIAL: STAINLESS STEEL FINISH: STAINLESS STEEL SATIN FINISH #304 HINGE MATERIAL: STAINLESS STEEL MOUNTING STYLE: FLOOR ANCHORED/OVERHEAD BRACED PRIVACY: STANDARD PRIVACY 58
	TP-2	3RD FLOOR TOILET PARTITIONS AND URINAL SCREEENS	BOBRICK DURALINE SERIES CGL COMPACT LAM PARTITIONS & SCREENS FLOOR-MOUNTED, OVERHEAD BRACED GAP-FREE CONFIGURATION TOILET PARTITION MODEL#1082 FINISH: COMPACT LAMINATE FUNDERMAX COLOR: CELLO *PROVIDE COORDINATING URINAL SCREENS IN SAME FINISH

GLASS PARTITON SYSTEM

1. METROWALL REP.: JIM CUNNINGHAM jim.cunningham@metro-wall.com

	GL-1	GLASS PARTITIONS	METROWALL SERIES: LP FINISH: BLACK ANODIZED REFER TO PLAN, ELEVATIONS, DOOR SCHEDULE, AND DETAILS FOR COMPLETE INFORMATION
	DISTRACTION DOT FILM ON GLASS PARTITION SYSTEM 1. INSTALLER TO PROVIDE MOCK-UP ON GLASS PANELS OF SELECTED OFFICE FRONT FOR REVIEW AND APPROVAL BY ORANGE & ROCKLAND PRIOR TO PURCHASING MATERIAL		
	FM-1	DISTRACTION DOT FILM ON GLASS PANELS	DECORATIVE FILMS OR EQUAL PATTERN: TBD WIDTH: TBD CUT MATERIAL AS REQUIRED AT EACH PIECE OF GLASS

MOTORIZED ROLLER SHADES

1. PROVIDE ALL COMPONENTS NECESSARY FOR A COMPLETE INSTALLATION
2. FOLLOW MANUFACTURER'S INSTALLATION INSTRUCTIONS
3. PROVIDE ALL NECESSARY ELECTRICAL REQUIREMENTS FOR MOTORIZED PRIVACY SHADES.
4. PROVIDE REMOTE CONTROL AND WALL SWITCH FOR MOTORIZED SHADES
5. **MECHO SHADES REP.: DOUGLAS MCCOY**
   douglas.mccoy@springswindowfashions.com MOBILE #267-889-3948

	WIN-1	MOTORIZED 'SINGLE' ROLLER SHADES ON 1ST FLOOR AS NOTED ON CM PLANS	MECHO SHADES SERIES: ELECTROSHADE SINGLE SHADE IN SURFACE MOUNTED POCKET THAT IS SEMI-RECESSED IN CEILING SYSTEM: IQ2DC MOTOR PROVIDE ALL COMPONENTS NECESSARY FOR A COMPLETE INSTALLATION BRACKETS AND MOUNTING HARDWARE: AS RECOMMENDED BY MANUFACTURER FOR MOUNTING INDICATED AND TO ACCOMMODATE SHADE FABRIC ROLL-UP SIZE AND WEIGHT. FABRIC: MECHO SHADE PATTERN: SOHO COLLECTION 1600 COLOR: TBD OPENNESS: 3% WIDTH: 126" WIDE
	WIN-2	MOTORIZED 'DOUBLE' ROLLER SHADES WITH BLACKOUT SHADE AT ALL CONFERENCE ROOMS AND TRAINING ROOM ON 1ST FLOOR AS NOTED ON CM PLANS	MECHO SHADES SERIES: ELECTROSHADE DOUBLE SHADE IN NO COST POCKET, TOP MOUNT, #13 BRACKET – SEMIRECESSED IN CEILING SYSTEM: IQ2DC MOTOR PROVIDE ALL COMPONENTS NECESSARY FOR A COMPLETE INSTALLATION BRACKETS AND MOUNTING HARDWARE: AS RECOMMENDED BY MANUFACTURER FOR MOUNTING INDICATED AND TO ACCOMMODATE SHADE FABRIC ROLL-UP SIZE AND WEIGHT. FABRIC 1: MECHO SHADE PATTERN: SOHO COLLECTION 1600 COLOR: TBD OPENNESS: 3% WIDTH: 126" WIDE FABRIC 2: MECHO SHADE PATTERN: CHELSEA BLACKOUT 0250 SERIES COLOR: TBD OPENNESS: BLACKOUT WIDTH: 126" WIDE

	WIN-3	MOTORIZED 'SINGLE' ROLLER SHADES THROUGHOUT 2ND & 3RD FLOORS AS NOTED ON CM PLANS	MECHO SHADES SERIES: ELECTROSHADE SINGLE SHADE IN RECESSED #4124 POCKET BRACKET SYSTEM: IQ2DC MOTOR PROVIDE ALL COMPONENTS NECESSARY FOR A COMPLETE INSTALLATION BRACKETS AND MOUNTING HARDWARE: AS RECOMMENDED BY MANUFACTURER FOR MOUNTING INDICATED AND TO ACCOMMODATE SHADE FABRIC ROLL-UP SIZE AND WEIGHT. FABRIC: MECHO SHADE PATTERN: SOHO COLLECTION 1600 COLOR: TBD OPENNESS: 3% WIDTH: 126" WIDE
	WIN-4	MOTORIZED 'DOUBLE' ROLLER SHADES WITH BLACKOUT SHADE AT ALL CONFERENCE ROOMS AND TRAINING ROOM ON 2ND & 3RD FLOOR AS NOTED ON CM PLANS	MECHO SHADES SERIES: ELECTROSHADE DOUBLE SHADE IN NO COST POCKET, TOP MOUNT, #13 BRACKET SYSTEM: IQ2DC MOTOR PROVIDE ALL COMPONENTS NECESSARY FOR A COMPLETE INSTALLATION BRACKETS AND MOUNTING HARDWARE: AS RECOMMENDED BY MANUFACTURER FOR MOUNTING INDICATED AND TO ACCOMMODATE SHADE FABRIC ROLL-UP SIZE AND WEIGHT. FABRIC 1: MECHO SHADE PATTERN: SOHO COLLECTION 1600 COLOR: TBD OPENNESS: 3% WIDTH: 126" WIDE FABRIC 2: MECHO SHADE PATTERN: CHELSEA BLACKOUT 0250 SERIES COLOR: TBD OPENNESS: BLACKOUT WIDTH: 126" WIDE

STAIR WELLS

1. INSTALLER TO FOLLOW MANUFACTURERS RECOMMENDED INSTALLATION GUIDELINES
2. INSTALLER TO ENSURE ALL SUBSTRATE PREPARATION AND MOISTURE TESTING REQUIREMENTS HAVE BEEN PERFORMED
3. INSTALLER TO USE MANUFACTURER APPROVED ADHESIVE
4. PROVIDE ALL COMPONENTS NECESSARY FOR A COMPLETE INSTALLTION
5. ROPPE REP.: JOETTE MASSI joettemassi@salesmaster.com

	RT-S	RUBBER TILE AT LANDINGS AS NOTED	ROPPE RAISED DESIGN RUBBER TILE PROFILE: #996 RAISED CIRCULAR VANTAGE DESIGN SIZE: COLOR: TBD
	TRD-1	RUBBER STAIR TREAD	ROPPE RAISED DESIGN RUBBER TREAD PROFILE: #98 RAISED CIRCULAR VANTAGE DESIGN NOSE TYPE: SQUARE COLOR: TBD
	RIS-1	RUBBER RISER	ROPPE RISERS (RSR) COLOR: TBD HEIGHT: 7”
	B-S	RUBBER BASE	ROPPE PINNACLE RUBBER BASE COLOR: TBD PROFILE: STANDARD TOE HEIGHT: 4”

GC NOTES:

1. **SUBMIT SAMPLE OF ALL MATERIALS SPECIFIED FOR REVIEW AND APPROVAL BY SNS PRIOR TO ORDERING THE MATERIALS (S)**

2. **ALL CHANGES IN FLOOR FINISH OCCUR AT THE CENTERLINE OF THE DOOR ITSELF. EXCEPTIONS ARE VCT, SDT FLOORING WHERE TRANSITION FAVORS THE ROOM SIDE OF THESE FLOOR FINISHES. REFER TO CM PLAN FOR ALIGNMENTS TO WALLS NOT CENTERLINE OF DOOR**

3. **PROVIDE SHOP DRAWINGS FOR ALL MILLWORK, ALL DECORATIVE COLUMN COVERS, ALL WOOD WORK ETC. REFER TO GENERAL NOTES IN CONSTRUCTION DOCUMENTS**

4. **PREPARE ALL SURFACES FOR NEW MATERIAL PER MANUFACTURER’S RECOMMENDATIONS AND INSTALLATION GUIDELINES.**

SECTION 09 29 00 - GYPSUM BOARD ASSEMBLIES

PART 1 - GENERAL

1.1 SECTION INCLUDES

A. Interior metal stud wall framing.

B. Metal ceiling suspension system.

C. Sound Attenuation Blankets.

D. Gypsum wallboard.

E. Joint treatment and accessories.

F. Control joints and expansion joints.

1.2 RELATED SECTIONS

A. Divisions 22, 23 & 26 By Omdex Incorporated Consulting Engineers – Plumbing, Mechanical and Electrical: Firestopping plumbing, mechanical and electrical penetrations in fire rated partition assemblies.

1.3 REFERENCES

A. ASTM C 1396/C 1396M - Standard Specification for Gypsum Wallboard.

B. ASTM C 79 - Standard Specification for Gypsum Sheathing Board.

C. ASTM C 475 - Standard Specification for Joint Compound and Joint Tape for Finishing Gypsum Board.

D. ASTM C 665 - Standard Specification for Mineral-Fiber Blanket Thermal Insulation for Light Frame Construction and Manufactured Housing.

E. ASTM C 754 - Standard Specification for Installation of Steel Framing Members to Receive Screw-Attached Gypsum Panel Products.

F. ASTM C 840 - Standard Specification for Application and Finishing of Gypsum Board.

G. ASTM C 1002 - Standard Specification for Steel Drill Screws for the Application of Gypsum Panel Products or Metal Plaster Bases.

H. ASTM E 90 - Standard Test Method for Laboratory Measurement of Airborne Sound Transmission Loss of Building Partitions and Elements.

I. ASTM E 413 - Classification for Rating Sound Insulation.

J. GA-201 - Using Gypsum Board for Walls & Ceilings; Gypsum Association.

K. GA-216 - Application and Finishing of Gypsum Board; Gypsum Association.

L. GA-600 - Fire Resistance Design Manual; Gypsum Association.

M. UL (FRD) - Fire Resistance Directory; Underwriters Laboratories Inc.

1.4 SYSTEM DESCRIPTION

A. Acoustic Attenuation for Interior Partitions Indicated as Acoustic: STC of 48, unless otherwise indicated, calculated in accordance with ASTM E 413, based on tests conducted in accordance with ASTM E 90.

1.5 SUBMITTALS

A. See Section 01 33 00 - Administrative Requirements, for submittal procedures.

B. Shop Drawings: Indicate special details associated with fireproofing, acoustic seals, and expansion joints.

C. Product Data: Provide data on accessories, joint finishing system, and expansion joints.

1.6 QUALITY ASSURANCE

A. Perform in accordance with ASTM C 840. Comply with requirements of GA-600 for fire-rated assemblies.
   1. Maintain one copy of standards at project site.

B. Applicator Qualifications: Company specializing in performing the work of this section with minimum 5 years of experience.

1.7 REGULATORY REQUIREMENTS

A. Conform to applicable code for fire rated assemblies as indicated.

PART 2 - PRODUCTS

2.1 MANUFACTURERS

A. Gypsum Board:
   1. G-P Gypsum Corp.
   2. National Gypsum Co.
   3. United States Gypsum Co.
   4. Substitutions: See Section 01 60 00 - Product requirements.

B. Where UL fire-rated design assemblies are noted on Drawings, use only those product manufacturers listed in the UL Fire Resistance Directory for each component of the UL Design.

2.2 INTERIOR METAL FRAMING MATERIALS

A. Non-Loadbearing Interior Framing System Components: ASTM C 645; galvanized sheet steel, size and gage to comply with ASTM C 754 at spacing indicated; maximum deflection L/240 at 5 psf. Use 20 gage typical unless a heavier gage is otherwise indicated.
   1. Studs: C shaped.
   2. Runners: U shaped, sized to match studs.
   3. Furring: Hat-shaped sections, minimum depth of 3/4 inch.

B. Gypsum Board Ceiling Suspension System:
   1. USG Drywall Suspension System.
   2. Substitutions: See Section 01 60 00 - Product requirements.

2.3 BOARD MATERIALS

A. Standard Abuse Resistant Gypsum Wallboard: ASTM C 1396/C 1396M; Designation AR, sizes to minimize joints in place; ends square cut.
   1. Thickness: 5/8 inch unless otherwise indicated.
   2. Edges: Tapered.

B. Fire Rated, Abuse Resistant Gypsum Wallboard: ASTM C 1396/C 1396M; Designation AR Type X, UL or WH rated; sizes to minimize joints in place; ends square cut.
   1. Thickness: As indicated and as required for fire rated assembly.
   2. Edges: Tapered.

C. Fire Rated, Abuse Resistant, Water and Mold Resistant Gypsum Wallboard: ASTM C 1396; ASTM C 1629; Designation AR Type X, Water and Mold Resistant, UL or WH rated; sizes to minimize joints in place; ends square cut.
   1. Thickness: As indicated and as required for fire rated assembly.
   2. Edges: Tapered.

D. Interior Gypsum Ceiling Board: ASTM C 1396/C 1396M; sizes to minimize joints in place; ends square cut.
   1. Thickness: 5/8 inch unless otherwise indicated.
   2. Edges: Tapered.

2.4 ACCESSORIES

A. Sound Attenuation Blankets: ASTM C 665; Type IC (blankets without membrane facing) produced by combining thermosetting resins with mineral fibers manufactured from slag wool, or rock wool. Thickness 3-1/2 inch unless otherwise indicated.

B. Acoustic Sealant: Non-hardening, non-skinning, for use in conjunction with gypsum board.

C. Expansion Joints: As indicated.

D. Corner Beads: Galvanized steel.

E. Trim: ASTM C 840; Bead type LC unless otherwise indicated.

F. Joint Materials: ASTM C 475 and as recommended by gypsum board manufacturer for project conditions.

H. Screws: ASTM C 1002; self-drilling type.

I. Anchorage to Substrate: Tie wire, screws, and other metal supports, of type and size to suit application; to rigidly secure materials in place.

PART 3 – EXECUTION

3.1 EXAMINATION

A. Verify that project conditions are appropriate for work of this section to commence.

3.2 FRAMING INSTALLATION

A. Metal Framing: Comply with ASTM C 754 and manufacturer's instructions.

B. Suspended Ceilings: System members as permitted by standard established by system manufacturer's recommendations.
   1. Level ceiling system to a tolerance of 1/600.
   2. Laterally brace entire suspension system.

C. Studs: Space studs at 16 inches on center typical; 12 inches on center at tile and stone wall finish, 12 inches on center where supporting millwork and cabinets; 12 inches on center in exterior wall construction; unless closer spacing is otherwise indicated or required by standard.
   1. Extend stud framing through ceiling to structure above where indicated. Maintain clearance under structural building members to avoid deflection transfer to studs. Provide extended leg ceiling runners and deflection track at all partitions going to the underside of the roof metal decking.

D. Openings: Reinforce openings as required for weight of doors or operable panels, using not less than double studs at jambs.

E. Standard Wall Furring: Install at concrete and masonry walls scheduled to receive gypsum board, not more than 4 inches from floor and ceiling lines and abutting walls. Secure in place on alternate channel flanges at maximum 24 inches on center.
   1. Orientation: Vertical.
   2. Spacing: At 16 inches on center unless otherwise indicated.

F. Furring for Fire Ratings: Install as required for fire resistance ratings indicated.

G. Blocking: Install blocking for support of plumbing fixtures, toilet partitions, toilet accessories, and hardware. Bolt or screw steel channels to studs.

3.3 ACCESSORIES INSTALLATION

A. Acoustic Insulation: Place tightly within spaces, around cut openings, behind and around electrical and mechanical items within partitions, and tight to items passing through partitions.

B. Acoustic Sealant: Install in accordance with manufacturer's instructions.
   1. Place one bead continuously on substrate before installation of perimeter framing members.
   2. Place continuous bead at perimeter of each layer of gypsum board.
   3. Seal around all penetrations by conduit, pipe, ducts, and rough-in boxes.

3.4 BOARD INSTALLATION

A. Comply with ASTM C 840. Install to minimize butt end joints, especially in highly visible locations.

B. Single-Layer Non-Rated: Install gypsum board vertically, with ends and edges occurring over firm bearing.

C. Single-Layer Fire-Rated: Install gypsum board vertically, with edges and ends occurring over firm bearing.

D. Double-Layer Installation: Use gypsum backing board for first layer, placed parallel to framing or furring members. Use fire rated gypsum backing board for fire rated partitions and ceilings. Place second layer parallel to first layer. Offset joints of second layer from joints of first layer.

E. Gypsum Ceiling Board: Install perpendicular to supports, with staggered end joints over supports.

F. Installation on Metal Framing and Suspension System: Use screws for attachment of all gypsum board.

3.6 INSTALLATION OF TRIM AND ACCESSORIES

A. Expansion Joints: Install in accordance with manufacturer's instructions.

B. Control Joints: Place control joints consistent with lines of building spaces and as directed.
   1. Not more than 30 feet apart on walls and ceilings over 50 feet long.
   2. At exterior soffits, not more than 30 feet apart in both directions.

C. Corner Beads: Install at external corners, using longest practical lengths.

D. Edge Trim: Install at locations where gypsum board abuts dissimilar materials and as indicated.

3.7 JOINT TREATMENT

A. Finish gypsum board in scheduled areas in accordance with levels defined in ASTM C 840 and as scheduled below.

3 8 TOLERANCES

A. Maximum Variation of Finished Gypsum Board Surface from True Flatness: 1/8 inch in 10 feet in any direction.

3.9 FINISH LEVEL SCHEDULE

A. Level 1: Above finished ceilings concealed from view.

B. Level 2: Utility areas.

C. Level 3: Walls and ceilings scheduled to receive textured finish.

D. Level 4: Walls and ceilings scheduled to receive flat or eggshell paint finish.

E. Level 5: Walls and ceilings scheduled to receive semi-gloss or gloss type paint finish.

END OF SECTION 09 29 00

SECTION 09 30 13 –TILE WORK

PART 1 - GENERAL

1.1 GENERAL REQUIREMENTS

A. Work of this Section, as shown or specified, shall be in accordance with the Contract Documents.

1.2 SECTION INCLUDES

A. Work of this Section includes all labor, materials, equipment, and services necessary to complete the tile work as shown on the drawings and/or specified herein, including, but not limited to, the following:
   1. Ceramic tile, porcelain tile and stone tile.
   2. Stone saddles.
   3. Setting beds, grout and sealant.

1.3 RELATED SECTIONS

A. Section 03 30 00 – Concrete

B. Section 04 20 00 – Masonry

C. Section 09 29 00 – Gypsum Drywall

1.4 QUALITY ASSURANCE

A. Qualifications of Installers: For cutting, installing and grouting of ceramic tile, use only thoroughly trained and experienced journeyman tile setters who are completely familiar with the requirements of this work, and the recommendations contained in the referenced standards.

B. Codes and Standards: In addition to complying with all pertinent codes and regulations, comply with the following:

   1. Manufacture all ceramic tile in accordance with Standard Grade Requirements of ANSI A-137.1.
   2. Install all ceramic tile in accordance with the recommendations contained in Handbook for Ceramic Tile Installation of the Tile Council of America, Inc., latest edition.

1.5 SUBMITTALS

A. Samples

   1. Before any tile is delivered to the job site, submit to the Architect sample panels, approx. 24" x 24”, mounted on hardboard back-up with selected grout color for each color and pattern of tile and grout specified.

   2. Submit 6" length of stone saddles.

B. Master Grade Certificates: Prior to opening ceramic tile containers, submit to the Architect a Master Grade Certificate, signed by an officer of the firm manufacturing the ceramic tile used, and issued when the shipment is made, stating the grade, kind of tile, identification marks for tile containers, and the name and location of the project.

1.6 PRODUCT HANDLING

A. Delivery and Storage

1. Deliver all materials of this Section to the job site in their original unopened containers with all labels intact and legible at time of use.
2. Store all materials under cover in a manner to prevent damage and contamination; store only the specified materials at the job site.

B. Protection: Use all means necessary to protect the materials of this Section before, during and after installation and to protect the installed work and materials of all other trades.

C. Replacements: In the event of damage, immediately make all repairs and replacements necessary.

1.7 PROJECT CONDITIONS

A. Maintain environmental conditions and protect work during and after installation to comply with referenced standards and manufacturer's printed recommendations.

B. Vent temporary heaters to exterior to prevent damage to tile work from carbon dioxide buildup.

C. Maintain temperatures at not less than 50 deg. F. in tiled areas during installation and for 7 days after completion.

PART 2 - PRODUCTS

2.1 PRODUCTS, GENERAL

A. ANSI Tile Standard: Provide tile that complies with ANSI A137.1 for types, compositions, and other characteristics indicated.

B. ANSI Standards for Tile Installation Materials: Provide materials complying with ANSI A108.02, ANSI standards referenced in other Part 2 articles, ANSI standards referenced by TCNA installation methods specified in tile installation schedules, and other requirements specified.

2.2 TILE PRODUCTS

A. PORCELAIN TILE FLOORING AND BASE
1. Manufacturer: NASCO Stone & Tile. Rep.: Joseph Tawil, joseph@nascostonetile.com.
2. Dynamic Coefficient of Friction (Floor Tile only): Not less than 0.42.

3. Finish, Tile Color, Pattern, and Grout: As specified in Section 09 00 00 Interior Color and Material Specifications for PT-1, FT-1, FT-B, FT-2, FT-B2, FT-3, FT-J. and FB-J.
4. Trim Units: Coordinate with sizes and coursing of adjoining flat tile where applicable and matching characteristics of adjoining flat tile.

B. WALL TILE
1. Manufacturer: NASCO Stone & Tile. Rep.: Joseph Tawil, joseph@nascostonetile.com.
2. Finish, Tile Color, Pattern, and Grout: As specified in Section 09 00 00 Interior Color and Material Specifications for WT-1M, WT-1W, WT-2, WT-3M, WT-3W, WT-4, WT-5, WT-B, WT-6, and BS-1.
3. Trim Units: Coordinate with sizes and coursing of adjoining flat tile where applicable and matching characteristics of adjoining flat tile.

2.3 STONE SADDLES

A. General: Fabricate to sizes and profiles indicated or required to provide transition between adjacent floor finishes. Profile shall comply with barrier-free accessibility requirements.

B. Stone Saddle: ASTM C 503/C 503M, with a minimum abrasion resistance of 10 according to ASTM C 1353 or ASTM C 241/C 241M and with honed finish.
1. Manufacturer: Stonesource, or equal.
2. Color: Refer to Section 09 00 00 Color and Material Specification for STONE SADDLE.

2.4 METAL EDGE TRANSITIONS

A. Barrier-free compliant metal edge transition strips between floor tile and adjacent flooring materials as indicated in Section 09 00 00 – Color and Material Specifications and where noted on Color and Material drawings for M-1 and M-2.
1. Manufacturer: ‘Schluter’ or equal.
2. Profile: Reno-U
3. Finish: As specified in Section 09 00 00 for M-1 and M-2.
4. Height: Size and profile to accommodate transition between various material thicknesses.

2.5 GROUT

A. Per Section 09 00 00 Color and Material Specification.
1. Contact grout manufacturer’s representative for recommended installation materials.

2.6 SEALANT

A. Joint Backing: Preformed, compressible, resilient, non-extruding, non-staining strips of foam neoprene, foam polyethylene, or other material recommended by sealant manufacturer.
B. Bond Breaker: Polyethylene tape, 3 mils thick, or other material recommended by sealant manufacturer.

C. Sealant Primer: Colorless, non-staining, or type to suit substrate surface, as recommended by sealant manufacturer.

D. Sealant: One-part silicone based sanitary sealant, conforming to ASTM C 920, Type S, Grade NS, Class 25. Sealant hardness upon full cure shall be between 20-30 Shore "A" Durometer. Color of sealant to blend with or match adjacent materials, and as selected by the Architect. Sealant shall be equivalent to 1700 Sanitary Sealant made by General Electric or approved equal.

PART 3 - EXECUTION

3.1 INSPECTION

A. Examine the areas and conditions where ceramic tile is to be installed and correct any conditions detrimental to the proper and timely completion of the work. Do not proceed with the work until unsatisfactory conditions are corrected to permit proper installation of the work.

3.2 CONDITION OF SURFACES

A. Floor substrates for the installation of large thin porcelain tile must be prepared to a floor flatness (Ff) of 50. Maximum variation in the substrate is not to exceed 1/8” in 10’ from the required plane, and no more than 1/16” in 12” when measured from high points.

B. Grind or fill concrete and masonry substrates as required to comply with allowable variations.

3.3 PREPARATION

A. Coordinate the following with Section 03 30 00:
   1. Cure concrete slabs that are to receive tile before tile application. Do not use liquid curing compounds or other coatings that may prevent bonding of tile setting materials to slabs. Slab shall be dry at time of tile installation.

B. Etch concrete substrate as may be required to remove curing compounds or other substances that would interfere with proper bond of setting bed. Rinse with water to remove all traces of treatment. Surface must meet finish requirements as noted in ANSI 108.01.
   1. Where required, prepare substrates to receive waterproofing by applying a reinforced mortar bed that complies with ANSI A108.1A and is sloped 1:50 (1/4 inch per foot) toward drains.

C. Blending: For tile exhibiting color variations, verify that tile has been factory blended and packaged so tile units taken from one package show same range of colors as those taken from other packages and match approved Samples. If not factory blended, either return to manufacturer or blend tiles at Project site before installing.

D. Field Applied Temporary Protective Coating: Pre-coat tile with continuous film of temporary protective coating, taking care not to coat unexposed tile surfaces.

3.4 JOINTS IN TILE WORK

A. Joint widths: Refer to Specification Section 09 00 00.

B. Joint locations: As shown on drawings.

C. Movement Joints: Conform to TCA Detail EJ171. Locate where movement joints are in back-up material. Provide movement joint at joints between mop receptors and ceramic tile. Provide movement joint at all vertical internal joints of wall tile. Movement joints 1/8" wide in ceramic tile. Fill all movement joints with specified backing and sealant. Use bond breaker where sufficient space for joint backing does not exist.
   1. Provide sealant between tile and plumbing fixtures, mirrors, pipes, countertops and other dissimilar materials penetrating or adjacent to ceramic tile.

3.5 INSTALLATION

A. Comply with the following installation standards:

   1. Wall tile over cement board or glass mat backer board using dry set mortar - ANSI A108.5 and A108.10.
   2. Wall tile over masonry or concrete using dry set mortar - ANSI A108.1 and A108.10.
   3. Floor tile using full mud set mortar - ANSI A108.1 and A108.10.
   4. Floor tile using dry set mortar - ANSI A108.5 and A108.10.

B. Contact grout manufacturer’s representative, as listed in Section 09 00 00 for recommended installation materials.

C. Refer to manufacturer’s installation guidelines for floor and wall tile.

D. Refer to the Tile Council of North America (TCNA) Guide for information regarding large format tile installation.

E. Handle, store, mix and apply setting and grouting materials in compliance with the manufacturer's instructions.

F. Extend tile work into recesses and under equipment and fixtures, to form a complete covering without interruptions. Terminate work neatly at obstructions, edges and comers without disruption of pattern or joint alignment.

G. Accurately form intersections and returns. Perform cutting and drilling of tile without marring visible surfaces. Carefully grind cut edges of tile abutting trim, finish, or built-in items for straight, aligned joints. Fit tile closely to electrical outlets, piping and fixtures so that plates, collars, or covers overlap tile.

3.6 INSTALLATION OF STONE SADDLES

A. Install stone saddles cut to profiles and sizes shown, accurately fitted to jambs, coped at stops, set in full bed of mortar herein specified, and with grouted edge joints as specified for floor tile.

3.7 CLEANING AND PROTECTION

A. Cleaning: At completion of placement and grouting, clean all ceramic tile surfaces so they are free of foreign matter.

1. Remove grout residue from tile as soon as possible.
2. Clean grout smears and haze from tile according to tile and grout manufacturer's written instructions but no sooner than 10 days after installation. Use cleaners only after determining that cleaners are safe to use by testing on samples of tile and other surfaces to be cleaned. Protect metal surfaces and plumbing fixtures from effects of cleaning. Flush surfaces with clean Water before and after cleaning to insure removal of all cleaning material.
3. Remove temporary protective coating by method recommended by coating manufacturer and that is acceptable to tile and grout manufacturer. Trap and remove coating to prevent drain clogging.

B. Protect installed tile work with Kraft paper or other heavy covering during construction period to prevent staining, damage, and wear. Apply coat of sealer to all grout joints and all unglazed tile.

C. Prohibit foot and wheel traffic from tiled floors for at least seven days after grouting is completed.

D. Before final inspection, remove protective coverings from tile surfaces.

E. Leave finished installation clean and free of cracked, chipped, broken, unbonded or otherwise defective tile work.

END OF SECTION 09 30 13

SECTION 09 51 00 - SUSPENDED ACOUSTICAL CEILINGS

PART 1 - GENERAL

1.1 SECTION INCLUDES

A. Suspended metal grid ceiling systems.

B. Acoustical units.

C. Supplementary acoustical insulation above ceiling.

D. Hold-down clips.

E. Seismic Design Category B installation. Special installation considerations are not required to meet lateral seismic forces. Install suspension system in accordance with ASTM C 636 and manufacturer's instructions and as supplemented in this section.

1.2 RELATED SECTIONS

A. Section 09 29 00 - Gypsum Board Assemblies: Suspended gypsum board ceilings.

B. Section 09 51 26 – Wood Veneer Grille Ceiling.

C. Division 21 – Fire Suppression (By Omdex Incorporated Consulting Engineers): Sprinkler heads in ceiling system.

D. Division 22 – HVAC (By Omdex Incorporated Consulting Engineers): Air diffusion devices in ceiling system.

E. Division 26 – Electrical (By Omdex Incorporated Consulting Engineers): Light fixture wiring and all other electrical appurtenances and components specified.

1.3 REFERENCES

A. ASTM C 635 - Standard Specification for the Manufacture, Performance, and Testing of Metal Suspension Systems for Acoustical Tile and Lay-in Panel Ceilings.

B. ASTM C 636 - Recommended Practice for Installation of Metal Ceiling Suspension Systems for Acoustical Tile and Lay-in Panels.

C. ASTM C 665 - Standard Specification for Mineral-Fiber Blanket Thermal Insulation for Light Frame Construction and Manufactured Housing.

D. ASTM E 1264 - Classification for Acoustical Ceiling Products.

E. ASTM E 84 - Standard Test Method for Surface Burning Characteristics of Building Materials.

1.4 SUBMITTALS

A. See Section 01 33 00 - Submittals, for submittal procedures.

B. Product Data: Provide data on suspension system components and acoustical units, and hold down clips.

C. Samples: Submit two full size samples illustrating material and finish of acoustical units.

D. Samples: Submit two samples each, 12 inches long, of suspension system main runner, cross runner, and perimeter molding.

E. Manufacturer's Installation Instructions: Indicate special procedures and perimeter conditions requiring special attention.

1.5 QUALITY ASSURANCE

A. Suspension System Manufacturer Qualifications: Company specializing in manufacturing the products specified in this section with minimum ten years documented experience.

B. Acoustical Unit Manufacturer Qualifications: Company specializing in manufacturing the products specified in this section with minimum three years documented experience.

1.6 ENVIRONMENTAL REQUIREMENTS

A. Maintain uniform temperature of minimum 60 degrees F, and maximum humidity of 40 percent prior to, during, and after acoustical unit installation.

1.7 PROJECT CONDITIONS

A. Sequence work to ensure acoustical ceilings are not installed until building is enclosed, sufficient heat is provided, dust generating activities have terminated, and overhead work is completed, tested, and approved.

B. Install acoustical units after interior wet work is dry.

PART 2 - PRODUCTS

2.1 ACOUSTICAL CEILING UNITS

A. Basis of Design manufacturers and products are listed below.

B. Manufacturers:
   1. Armstrong World Industries, Inc.; www.armstrongceilings.com.

C. Acoustical Units - General: ASTM E 1264, Class A (UL).

D. Acoustical Panels: As specified in Section 09 00 00 Color and Material Specifications, and as indicated on the Reflected Ceiling Plans for ACT-1, ACT-2. ACT-3, and ACT-4.

2.2 SUSPENSION SYSTEM

A. Basis of Design manufacturers and products are listed below.

B. Manufacturers:
   1. Same as for acoustical units.

C. Suspension Systems - General: ASTM C 635; die cut and interlocking components, with perimeter moldings and hold down clips as required.

D. Exposed Suspension Systems: Formed galvanized steel, commercial quality cold rolled, with painted finish; heavy-duty.
   1. Grid System: As specified in Section 09 00 00 Color and Material Specifications for each acoustical unit type.

2.3 ACCESSORIES

A. Support Channels and Hangers: Galvanized steel; size and type to suit application, seismic requirements, and ceiling system flatness requirement specified.

B. Perimeter Moldings: Same material and finish as grid.
   1. At Exposed Grid: Provide L-shaped molding for mounting at same elevation as face of grid.

C. Hold-Down Clips: Manufacturer's standard. Refer to drawings for room locations.

D. Acoustical Insulation: ASTM C 665, friction fit type, unfaced batts.
   1. Thickness: 4 inch.
   2. Size: To fit acoustical suspension system.

E. Touch-up Paint: Type and color to match acoustical and grid units.

PART 3 - EXECUTION

3.1 EXAMINATION

A. Verify existing conditions before starting work.

B. Verify that layout of hangers will not interfere with other work.

3.2 INSTALLATION - SUSPENSION SYSTEM

A. Install suspension system in accordance with ASTM C 636 and manufacturer's instructions and as supplemented in this section.

B. Rigidly secure system, including integral mechanical and electrical components, for maximum deflection of 1:360.

C. Locate system on room axis according to reflected plan.

D. Install after major above-ceiling work is complete. Coordinate the location of hangers with other work.

E. Hang suspension system from roof structural steel framing. Do not hang suspension system from steel roof deck.

F. Hang suspension system independent of walls, columns, ducts, pipes and conduit. Where

carrying members are spliced, avoid visible displacement of face plane of adjacent members.

G. Where ducts or other equipment prevent the regular spacing of hangers, reinforce the nearest affected hangers and related carrying channels to span the extra distance.

H. Do not support components on main runners or cross runners if weight causes total dead load to exceed deflection capability.

I. Support fixture loads using supplementary hangers located within 6 inches of each corner, or support components independently.

J. Do not eccentrically load system or induce rotation of runners.

K. Perimeter Molding: Install at intersection of ceiling and vertical surfaces and at junctions with other interruptions.
   1. Use longest practical lengths.
   2. Overlap corners.

3.3 INSTALLATION - ACOUSTICAL UNITS

A. Install acoustical units in accordance with manufacturer's instructions.

B. Fit acoustical units in place, free from damaged edges or other defects detrimental to appearance and function.

C. Fit border trim neatly against abutting surfaces.

D. Install units after above-ceiling work is complete.

E. Install acoustical units level, in uniform plane, and free from twist, warp, and dents.

F. Cutting Acoustical Units:
   1. Cut to fit irregular grid and perimeter edge trim.
   2. Make field cut edges of same profile as factory edges.
   3. Double cut and field paint exposed reveal edges.

G. Where round obstructions occur, provide preformed closures to match perimeter molding.

H. Lay acoustical insulation for a distance of 48 inches either side of acoustical partitions that do not extend full height to deck above.

I. Install hold-down clips on each panel to retain panels tight to grid system at the following locations:
   1. Install hold-down clips on panels within 20 ft of an exterior door, and also where noted on drawings.

3.4 ERECTION TOLERANCES

A. Maximum Variation from Flat and Level Surface: 1/8 inch in 10 feet.

B. Maximum Variation from Plumb of Grid Members Caused by Eccentric Loads: 2 degrees.

END OF SECTION 09 51 00

SECTION 09 51 26 – WOOD VENEER GRILLE CEILING

PART 1 – GENERAL

1.1 RELATED DOCUMENTS

Drawings and general conditions of Contract, including General and Supplementary Conditions and Division 01 Specification sections apply to work of this section.

1.2 SUMMARY

A. Section Includes:

1. WoodWorks Grille-Forté Veneered Wood Ceiling Panels with Centered Notched and Flat Backers
2. Exposed grid suspension system.
3. Wire hangers, fasteners, main runners, cross tees, wall angle moldings and accessories.

B. Related Sections:

1. Section 09 51 00 - Acoustical Ceilings
2. Section 09 29 00 – Gypsum Board Assemblies
3. Division 23 Sections- HVAC
4. Division 26 Sections - Electrical Work

1.3 REFERENCES

A. American Society for Testing and Materials (ASTM):

1. ASTM A 641 Standard Specification for Zinc-Coated (Galvanized) Carbon Steel Wire.
2. ASTM A 653 Standard Specification for Steel Sheet, Zinc-Coated (Galvanized) by the Hot- Dip Process.
3. ASTM A 1008 Standard Specification for Steel, Sheet, and Cold Rolled Carbon, Structural, High-Strength Low-Alloy and High-Strength Low-Alloy with Improved Formability.
4. ASTM C 635 Standard Specification for Metal Suspension Systems for Acoustical Tile and Lay-in Panel Ceilings.
5. ASTM C 636 Recommended Practice for Installation of Metal Ceiling Suspension Systems for Acoustical Tile and Lay-in Panels.
6. ASTM E 84 Standard Test Method for Surface Burning Characteristics of Building Materials.
7. ASTM E 580 Application of Ceiling Suspension Systems for Acoustical Tile and Lay-In Panels in Areas Requiring Seismic Restraint.

8. ASTM C 423 Sound Absorption and Sound Absorption Coefficients by the Reverberation Room Method.
9. ASTM E 1264 Classification for Acoustical Ceiling Products.
10. Hardwood Plywood & Veneer Association (HPVA)
11. International Building Code
12. ASHRAE Standard 62 1 2004 Ventilation for Acceptable Indoor Air Quality
13. NFPA 70 National Electrical Code
14. ASCE 7 American Society of Civil Engineers, Minimum Design Loads for Buildings and Other Structures

1.4 SUBMITTALS

A. Shop Drawings: Layout and details of ceilings. Show locations of items that are to be coordinated with or supported by the ceilings.

B. Installation Instructions: Submit manufacturer's installation instructions as referenced in Part 3, Installation.

C. Product Data: Submit manufacturer's technical data for each type of ceiling unit and suspension system required.

D. Samples: 4-1/4"x 7"x 3/4 – Real Wood Veneer on fire rated particle board– Semi-gloss tinted topcoat – Clear Finish

E. Certifications: Manufacturer's certifications that products comply with specified requirements, including laboratory reports showing compliance with specified tests and standards.

1.5 QUALITY ASSURANCE

A. Single-Source Responsibility: Provide ceiling panel units and grid components by a single manufacturer.

B. Fire Performance Characteristics: Identify ceiling components with appropriate markings of applicable testing and inspecting organization.

   1. Surface Burning Characteristics: As follows, tested per ASTM E-84 and complying with ASTM E 1264 for Class A products.
   2. HPVA (Hardwood Plywood and Veneer Association) certification and audit program per ASTM E-84 tunnel test.

C. Woodworking Standards: Manufacturer must comply with specified provisions of Architectural Woodworking Institute quality standards.

D. Coordination of Work: Coordinate ceiling work with installers of related work including, but not limited to building insulation, gypsum board, light fixtures, mechanical systems, electrical systems, and sprinklers.

1.6 DELIVERY, STORAGE, AND HANDLING

A. Store ceiling components in a dry interior location in their cartons prior to installation to avoid damage. Store cartons in a flat, horizontal position. The protectors between the panels should not be removed until installation.

B. Do not store in unconditioned spaces with humidity greater than 55 percent or lower than 25 percent relative humidity and temperatures lower than 50 degrees F or greater than 86 degrees F. Panels must not be exposed to extreme temperatures, for example, close to a heating source or near a window with direct sunlight.

C. Handle ceiling units carefully to avoid chipped edges or damage to units in any way.

1.7 PROJECT CONDITIONS

A. Wood ceiling materials should be permitted to reach room temperature and have a stabilized moisture content for a minimum of 72 hours before installation. (Remove plastic wrap to allow panels to climatize).

B. The wood panels should not be installed in spaces where the temperature or humidity conditions vary from the temperatures and conditions that will be normal in the occupied space.

C. As interior finish products, the veneered panels are designed for installation in temperature conditions between 50 degrees F and 86 degrees F, in spaces where the building is enclosed, and HVAC systems are functioning and will be in continuous operation. Relative humidity should not fall below 25 percent or exceed 55 percent.

1.8 WARRANTY

A. Veneered Wood Panel: Submit a written warranty executed by the manufacturer, agreeing to repair or replace panels that fail within the warranty period. Failures include, but are not limited to:
   1. Veneered Wood Panels: Defects in materials or factory workmanship.
   2. Grid System: Rusting and manufacturing defects.

B. Warranty Period:
   1. Veneered Wood panels: One (1) year from date of installation.
   2. Grid: Ten years from date of installation.

C. The Warranty shall not deprive the Owner of other rights the Owner may have under other provisions of the Contract Documents and will be in addition to and run concurrent with other warranties made by the Contractor under the requirements of the Contract Documents.

1.9 MAINTENANCE

A. Extra Materials: Deliver extra materials to Owner. Furnish extra materials described below that match products installed. Packaged with protective covering for storage and identified with appropriate labels.

   1. Ceiling Units: Furnish quality of full-size units equal to 2.0 percent of amount installed.

2. Exposed Suspension System Components: Furnish quantity of each exposed suspension component equal to 1.0 percent of amount installed.

PART 2 – PRODUCTS

2.1 MANUFACTURERS

A. Basis of Design WoodWorks Grille - Forte' Veneered Ceilings Panels:
   1. Armstrong World Industries, Inc.

B. Suspension Systems:
   1. Armstrong World Industries, Inc.

2.2 WOOD CEILING UNITS

A. Ceiling Panels Type ABC-1:
   1. Size, style, and configuration: As indicated in Section 09 00 00 Interior Color and Material Specification for ABC-1, and where indicated on drawings.
   2. Flame Spread:
      Class A: ASTM E84 surface burning characteristics. Flame Spread Index 25 or less. Smoke Developed Index 50 or less.
   3. Product: WoodWorks Grille Forté Veneered Panels as manufactured by Armstrong World Industries. Armstrong Rep: Thomas Lull talull@armstrongceilings.com

B. Accessories:
   1. Provide all components necessary for a complete installation. Follow manufacturer's installation guidelines.

2.3 SUSPENSION SYSTEMS

A. Components: All main beams and cross tees shall be commercial quality hot dipped galvanized steel as per ASTM A653. Main beams and cross tees are double-web steel construction with 15/16-inch type exposed flange design. Exposed surfaces chemically cleansed, capping prefinished galvanized steel in baked polyester paint. Main beams and cross tees shall have rotary stitching.
   1. Structural Classification: ASTM C635 (Heavy Duty).
   2. Product and Color: As indicated in Section 09 00 00 Interior Color and Material Specification for ABC-1.

B. Attachment Devices: Size for five times design load indicated in ASTM C 635, Table 1, Direct Hung unless otherwise indicated.

C. Wire for Hangers and Ties: ASTM A641, Class 1 zinc coating, soft temper, pre-stretched, with a yield stress load of at least times-three design load, but not less than 12 gauge.

D. Accessories: Provide all components necessary for a complete installation. Follow manufacturer's installation guidelines.

E. Acoustical Infill Panels: As indicated in Section 09 00 00 Interior Color and Material Specification for ABC-1.

PART 3 – EXECUTION

3.1 EXAMINATION

A. Do not proceed with installation until all wet work such as concrete, plastering and painting has been completed and thoroughly dried out.

B. Proper designs for both supply air and return air, maintenance of the HVAC filters and building interior space are essential to minimize soiling. Before starting the HVAC system, make sure supply air is properly filtered and the building interior is free of construction dust.

3.2 PREPARATION

A. Measure each ceiling area and establish layout of acoustical units to balance border widths at opposite edges of each ceiling. Avoid use of less than half width units at borders and comply with reflected ceiling plans. Coordinate panel layout with mechanical and electrical fixtures.

B. WoodWorks ceiling materials should be permitted to reach room temperature and have a stabilized moisture content for a minimum of 72 hours before installation. (Remove plastic wrap to allow panels to climatize).

3.3 INSTALLATION

A. Interior WoodWorks products, the veneered wood panels are designed for installation in temperature conditions between 50 degrees F and 86 degrees F, in spaces where the building is enclosed, and HVAC systems are functioning and will be in continuous operation. Relative humidity should not fall below 25 percent or exceed 55 percent.

B. Install suspension system and panels in compliance with ASTM C636, ASTM E580, with the approval of the authorities having jurisdiction, and in accordance with the manufacturer's WoodWorks Grille Forté Veneered Installation Instructions.

C. Coordinate with light fixtures.

D. When installed, there will be a 1" reveal between end panels.

3.4 ADJUSTING AND CLEANING

A. Replace damaged and broken panels.

B. Clean exposed surfaces of ceilings panels, including trim, edge moldings, and suspension members. Comply with manufacturer's instructions for cleaning and touch up of minor finish damage.

END OF SECTION 09 51 26

SECTION 09 64 23 – WOOD FLOORING

PART 1 - GENERAL

1.1 GENERAL REQUIREMENTS

A. Work of this Section, as shown or specified, shall be in accordance with the Contract Documents.

1.2 SECTION INCLUDES

A. Work of this Section includes all labor, materials, equipment, and services necessary to complete the tile work as shown on the drawings and/or specified herein.

1.3 RELATED SECTIONS

A. Section 03 30 00 – Concrete

B. Section 06 10 00 – Rough Carpenty

1.4 QUALITY ASSURANCE

A. Qualifications of Installers: An experienced installer who has completed wood flooring similar in material, design, and extent to that indicated for this Project and whose work has resulted in wood flooring installations with a record of successful in-service performance.

1.5 SUBMITTALS

A. See Section 01 33 00 - Administrative Requirements, for submittal procedures.

B. Product Data: Provide data on specified products, describing physical and performance characteristics; including sizes, patterns and colors available; and installation instructions.

C. Verification Samples: Submit two samples, full-size units illustrating color and pattern for each flooring product specified.

D. Maintenance Data: Include maintenance procedures, recommended maintenance materials, and suggested schedule for cleaning, stripping, and re-waxing.

1.6 PRODUCT HANDLING

A. Deliver wood flooring materials in unopened cartons or bundles.

B. Protect wood flooring from exposure to moisture. Do not deliver wood flooring until after concrete, masonry, plaster, ceramic tile, and similar wet-work is complete and dry.

C. Store wood flooring materials in a dry, warm, well-ventilated, weathertight location.

D. Do not acclimate (open packages) prior to installation.

1.7 PROJECT CONDITIONS

A. Conditioning:
1. Follow manufacturer's installation instructions for subfloor Moisture testing, material acclimation, maintenance, etc.
2. Use the following guidelines for jobsite evaluation:
a. Acceptable temperature range: 55F-85F degrees [Fahrenheit]
b. Acceptable relative humidity [rh] range: 25%-75% RH
c. Acceptable levelness tolerance: no more than 1/4" variance in 10' radius
d. Acceptable dryness tolerance:
i. Concrete slab: ASTM F2170 in-situ probe readings of 85% or lower
ii.Concrete slab: ASTM F1869 vapor transmission rate of 5lbs/1000sf per 24 hour period or less.
iii. Wooden subfloor: moisture content [MC] of 12% MC or lower
iv. Acceptable alkalinity range: ph readings of 7-10

B. Install wood flooring after other finishing operations, including painting, have been completed

PART 2 - PRODUCTS

2.1 PRODUCTS

A. WOOD FLOORING
1. Manufacturer: NUWUD, nusolutionsgroup.com, T: 973-615-5119.
2. Style, Color, and Pattern: As specified in Section 09 00 00 Interior Color and Material Specifications for WDF-1.
3. Provide coordinating barrier-free compliant wood floor transitions between wood flooring and adjacent floor finishes and heights.

2.2 ADHESIVES

A. As recommended by flooring manufacturer.
1. Always follow the requirements of recommended adhesive manufacturer for acceptable substrates, moisture vapor, and alkalinity tolerances, trowel sizes, spread rates, working time, and open time.

PART 3 - EXECUTION

3.1 INSPECTION

A. Examine the areas and conditions where wood flooring is to be installed and correct any conditions detrimental to the proper and timely completion of the work. Do not proceed with the work until unsatisfactory conditions are corrected to permit proper installation of the work.

3.2 CONDITION OF SURFACES

A. Grind or fill concrete and masonry substrates as required to comply with allowable variations.

3.3 INSTALLATION

A. Comply with flooring manufacturer's written installation instructions.

3.4 CLEANING AND PROTECTION

A. Perform the following operations immediately after completing resilient product installation:
   1. Remove adhesive and other blemishes from exposed surfaces.
   2. Sweep and vacuum surfaces thoroughly.
   3. Use manufacturer's recommended floor cleaner on surfaces to remove marks and soil.
      a. Do not clean surfaces until after time period recommended by manufacturer.

B. Protect wood flooring products from mars, marks, indentations, and other damage from construction operations and placement of equipment and fixtures during remainder of construction period. Use protection methods recommended in writing by manufacturer.
   1. Cover installed wood flooring to protect it from damage or deterioration, during remainder of construction period until Substantial Completion. Use heavy kraft-paper or other suitable covering. Do not use plastic sheet or film that could cause condensation.
      a. Do not tape protection material to wood flooring.
   2. Do not move heavy and sharp objects directly over surfaces. Place hardboard or plywood panels over flooring and under objects while they are being moved. Slide or roll objects over panels without moving panels.

END OF SECTION 09 64 23

SECTION 09 65 13 - RESILIENT STAIR TREADS AND ACCESSORIES

PART 1 - GENERAL

1.1 SECTION INCLUDES

A. Resilient stair treads and risers.

B. Installation accessories.

1.2 RELATED SECTIONS

A. Section 05 51 00 – Concrete Filled Metal Pan Stairs

B. Section 09 00 00 – Interior Color and Material Specifications

C. Section 09 65 19 – Resilient Floor Tile and Accessories

1.3 REFERENCES

A. ASTM F2169, Standard Specification for Resilient Stair Treads

B. ASTM E648, Standard Test Method for Critical Radiant Flux of Floor Covering Systems Using a Radiant Heat Energy Source

C. ASTM E662, Standard Test Method for Specific Optical Density of Smoke Generated by Solid Materials

D. ASTM F386, Standard Test Method for Thickness of Resilient Flooring Materials Having Flat Surfaces

E. ASTM F925, Standard Test Method for Resistance to Chemicals of Resilient Flooring

F. ASTM F1514, Standard Test Method for Measuring Heat Stability of Resilient Flooring by Color Change

G. ASTM D2240, Standard Test Method for Rubber Property—Durometer Hardness

H. ASTM D2047, Standard Test Method for Static Coefficient of Friction as Measured by the James Machine

I. ASTM D3389, Standard Test Method for Coated Fabrics Abrasion Resistance (Rotary Platform Abrader)

J ASTM F710, Standard Practice for Preparing Concrete to Receive Resilient Flooring

K. ASTM F1482, Standard Guide to Wood Underlayments Products Available for Use Under Resilient Flooring

L. NFPA 253, Test Method for Critical Radiant Flux of Floor Covering Systems Using a Radiant Energy Source

M. NFPA 258, Test Method for Specific Density of Smoke Generated by Solid Materials

1.4 SUBMITTALS

A. See Section 01 33 00 - Administrative Requirements, for submittal procedures.

B. Product Data: Provide data on specified products, describing physical and performance characteristics; including sizes, patterns and colors available; and installation instructions.

C. Verification Samples: Submit two samples, full-size units illustrating color and pattern for each resilient flooring product specified.

D. Maintenance Data: Include maintenance procedures, recommended maintenance materials, and suggested schedule for cleaning, stripping, and re-waxing.

1.5 DELIVERY, STORAGE, AND HANDLING

A. Deliver materials in labeled packages. Store and handle in strict compliance with manufacturer's recommendations. Protect from damage due to weather, excessive temperatures, and construction operations.

B. Deliver materials sufficiently in advance of installation to condition materials to the required temperature for 48-hours prior to installation.

1.6 PROJECT CONDITIONS

A. Install Rubber Stair Treads after other finishing operations, including painting, have been completed.

B. Maintain temperature at service levels and/or the ambient temperature must remain steady (± 10° F) between 65° F and 85° F for at least 48-hours prior to, during and until substantial completion.

C. Maintain relative humidity at service levels, or between 40% and 65% RH.

D. Avoid conditions in which dew point causes condensation on the installation surface.

1.7 WARRANTY

A. Provide manufacturer’s standard limited commercial warranty to cover manufacturing defects.

PART 2 - PRODUCTS

2.1 MATERIALS - STAIR COVERING

A. Manufacturer:

1. Roppe Corporation, 1602 N Union St., Fostoria, OH 44830, P: (800) 537-9527
   Roppe Rep.: Joette Massi: joettemassi@salesmaster.com
2. Substitutions: No substitutions permitted.

B. Rubber Tile at Landings:

1. Roppe Raised Design Rubber Tile, #986 Raised Circular Vantage Design.
   a. Size and Color as specified in Section 09 00 00 Interior Color and Material Specification for RT-S.

C. Rubber Stair Tread: Full width and depth of stair tread in one piece.
1. Roppe Raised Design Rubber Tread, #98 Raised Circular Vantage Design.
   a. Nose Type: Square.
   b. Color: As indicated in Section 09 00 00 Interior Color and Material Specification for TRD-1.
   c. Length: As required for stair tread.

D. Rubber Riser: Full width and height of stair riser in one piece.

1. Roppe Risers (RSR)
   a. Color: As indicated in Section 09 00 00 Interior Color and Material Specification for RIS-1.
   b. Height: As required for stair riser.

E. Rubber Base:
1. Roppe Pinnacle Rubber Base.
   a. Profile: Standard Toe
   b. Height: 4”
   c. Color: As indicated in Section 09 00 00 Interior Color and Material Specification for B-S

2.2 ACCESSORIES

A. Subfloor Filler: White premix latex; type recommended by adhesive material manufacturer.

B. Primers, Adhesives, and Seaming Materials: Waterproof; types recommended by flooring manufacturer.

C. Sealer and Wax: Types recommended by flooring manufacturer.

PART 3 - EXECUTION

3.1 EXAMINATION

A. Verify that sub-floor surfaces are smooth and flat within the tolerances specified for that type of work and are ready to receive resilient flooring.

B. Verify that wall surfaces are smooth and flat within the tolerances specified for that type of work, are dust-free, and are ready to receive resilient base.

C. Verify that sub-floor surfaces are dust-free and free of substances which would impair bonding of adhesive materials to sub-floor surfaces.

D. Verify that concrete sub-floor surfaces are ready for resilient flooring installation by testing for moisture emission rate and alkalinity in accordance with ASTM F 710; obtain instructions if test results are not within limits recommended by resilient flooring manufacturer and adhesive materials manufacturer.

E. Verify that required floor-mounted utilities are in correct location.

3.2 PREPARATION

A. Remove sub-floor ridges and bumps. Fill minor low spots, cracks, joints, holes, and other defects with sub-floor filler to achieve smooth, flat, hard surface.

B. Prohibit traffic until filler is cured.

C. Clean substrate.

D. Apply primer as required to prevent "bleed-through" or interference with adhesion by substances that cannot be removed.

3.3 INSTALLATION - STAIR COVERINGS

A. Install in accordance with manufacturer's instructions.

B. Adhere over entire surface. Fit accurately and securely.

3.4 CLEANING

A. Remove excess adhesive from floor, base, and wall surfaces without damage.

B. Clean, seal, and wax resilient flooring products in accordance with manufacturer's instructions.

3.5 PROTECTION OF FINISHED WORK

A. Prohibit traffic on resilient flooring for 48 hours after installation.

END OF SECTION 09 65 13

SECTION 09 65 19 - RESILIENT FLOOR TILE AND ACCESSORIES

PART 1 - GENERAL

1.1 SECTION INCLUDES

A. Luxury Vinyl Tile (LVT).

B. Vinyl Composition Tile (VCT).

C. Static Dissipative Tile (SDT).

D. Installation accessories.

E. Reducer strips at doors.

F. Resilient base.

1.2 RELATED SECTIONS

A. Section 09 00 00 – Interior Color and Material Specifications.

B. Section 09 65 13 – Resilient Stair Treads and Accessories.

C. Section 09 68 13 – Carpet Tile.

1.3 REFERENCES

A. ASTM F 710 - Standard Practice for Preparing Concrete Floors to Receive Resilient Flooring.

1.4 SUBMITTALS

A. See Section 01 33 00 - Administrative Requirements, for submittal procedures.

B. Product Data: Provide data on specified products, describing physical and performance characteristics; including sizes, patterns and colors available; and installation instructions.

C. Verification Samples: Submit two samples, full-size units illustrating color and pattern for each resilient flooring product specified.

D. Maintenance Data: Include maintenance procedures, recommended maintenance materials, and suggested schedule for cleaning, stripping, and re-waxing.

1.5 DELIVERY, STORAGE, AND PROTECTION

A. Store resilient products and installation materials in dry spaces protected from the weather, with ambient temperatures maintained within range recommended by manufacturer, but not less than 55 degrees F and 90 degrees F.

1.6 ENVIRONMENTAL REQUIREMENTS

A. Maintain temperature in storage area between 55 degrees F and 90 degrees F.

B. Store materials for not less than 48 hours prior to installation in area of installation at a temperature of 70 degrees F to achieve temperature stability. Thereafter, maintain conditions above 55 degrees F.

PART 2 – PRODUCTS

2.1 MATERIALS – LUXURY VINYL TILE

A. Manufacturer:
1. Interface, 1280 W Peachtree St NW, Atlanta, GA 30309. Interface Rep.: Charlie Trainor, charlie.trainor@interface.com, M: 973.715.4669
2. Substitutions: No substitutions permitted.

B. Luxury Vinyl Tile:
1. Style, Color, and Size: As indicated in Section 09 00 00 Interior Color and Material Specifications for LVT-1.
2. Limited Commercial Warranty: 15 years.

2.2 MATERIALS – VINYL COMPOSITION TILE

A. Manufacturer:
1. Tarkett, Inc. Tarkett – Johnsonite Rep: Robert Rosselli, robert.rosselli@tarkett.com, Cell# 973.866.1545.
2. Substitutions: No substitutions permitted.

B. Vinyl Composition Tile
1. Style, Color, and Size: As indicated in Section 09 00 00 Interior Color and Material Specifications for VCT-1.
2. Limited Commercial Warranty: 5 years.

2.3 MATERIALS – STATIC DISSIPATIVE TILE

A. Manufacturer:
1. Tarkett, Inc. Tarkett – Johnsonite Rep: Robert Rosselli, robert.rosselli@tarkett.com, Cell# 973.866.1545.
2. Substitutions: No substitutions permitted.

B. Static Dissipative Tile
1. Style, Color, and Size: As indicated in Section 09 00 00 Interior Color and Material Specifications for SDT-1.
   a. Provide copper grounding coil Product #1256727 and tile adhesive “Tarkett 906 Conducive Adhesive Coverage” for a complete installation.
2. Limited Commercial Warranty: 20 years.

2.4 REDUCER STRIPS AND RESILIENT BASES

A. Manufacturer:
1. Tarkett, Inc. Tarkett – Johnsonite Rep: Robert Rosselli, robert.rosselli@tarkett.com, Cell# 973.866.1545.
2. Substitutions: No substitutions permitted.

B. Reducer Strips and/or Transitions:
   1. Color: As indicated in Section 09 00 00 Interior Color and Material Specifications for RS-1.
   2. Profile: “X” as required for transitions between varying floor materials. Profile of vinyl reducers and levelers to be tailored to each transition between dissimilar floor materials.

C. Resilient Bases
   1. Color, Type, and Height: As indicated on the Color and Material Specifications for B-1, B-2, and B-3.
   2. Gauge: 1/8” as applicable.
   3. Bases with carpet tile to be straight profile.
   4. Bases with vinyl flooring to be coved.

2.5 ACCESSORIES

A. Subfloor Filler: White premix latex; type recommended by adhesive material manufacturer.

B. Primers, Adhesives, and Seaming Materials: Waterproof; types recommended by flooring manufacturer.

C. Sealer and Wax: Types recommended by flooring manufacturer.

PART 3 - EXECUTION

3.1 EXAMINATION

A. Verify that sub-floor surfaces are smooth and flat within the tolerances specified for that type of work and are ready to receive resilient flooring.

B. Verify that wall surfaces are smooth and flat within the tolerances specified for that type of work, are dust-free, and are ready to receive resilient base.

C. Verify that sub-floor surfaces are dust-free and free of substances which would impair bonding of adhesive materials to sub-floor surfaces.

D. Verify that concrete sub-floor surfaces are ready for resilient flooring installation by testing for moisture emission rate and alkalinity in accordance with ASTM F 710; obtain instructions if test results are not within limits recommended by resilient flooring manufacturer and adhesive materials manufacturer.

E. Verify that required floor-mounted utilities are in correct location.

3.2 PREPARATION

A. Remove sub-floor ridges and bumps. Fill minor low spots, cracks, joints, holes, and other defects with sub-floor filler to achieve smooth, flat, hard surface.

B. Prohibit traffic until filler is cured.

C. Clean substrate.

D. Apply primer as required to prevent "bleed-through" or interference with adhesion by substances that cannot be removed.

3.3 INSTALLATION

A. Install in accordance with manufacturer’s instructions as required for the specified floor materials. Refer to Section 09 00 00 Interior Color and Material Specifications for additional requirements.

3.4 CLEANING

A. Remove excess adhesive from floor, base, and wall surfaces without damage.

B. Clean, seal, and wax resilient flooring products in accordance with manufacturer's instructions.

3.5 PROTECTION OF FINISHED WORK

A. Prohibit traffic on resilient flooring for 48 hours after installation.

END OF SECTION 09 65 19

SECTION 09 68 13 - CARPET TILE

PART 1 - GENERAL

1.1 SECTION INCLUDES

A. Carpet Tile

1.2 RELATED SECTIONS

A. Section 09 00 00 – Interior Color and Material Specification: Color and material selections.

B. Section 09 65 19 – Resilient Floor Tile and Accessories: Resilient base at carpet.

1.3 REFERENCES

A. CRI 104 - Standard for Installation of Commercial Textile Floorcovering Materials; Carpet and Rug Institute.

1.4 SUBMITTALS

A. See Section 01 33 00 - Administrative Requirements, for submittal procedures.

B. Shop Drawings: Indicate layout of joints, direction of carpet pile, and location of edge moldings.

C. Product Data: Provide data on specified products, describing physical and performance characteristics; sizes, patterns, colors available, and method of installation.

D. Samples: Submit two carpet tiles illustrating color and pattern design for each carpet color selected.

E. Submit two samples of edge strip.

F. Manufacturer's Installation Instructions: Indicate special procedures.

G. Maintenance Data: Include maintenance procedures, recommended maintenance materials, and suggested schedule for cleaning.

1.5 QUALITY ASSURANCE

A. Manufacturer Qualifications: Company specializing in manufacturing specified carpet tile with minimum three years documented experience.

B. Installer Qualifications: Company specializing in installing carpet with minimum three years documented experience and approved by manufacturer.

1.3 ENVIRONMENTAL REQUIREMENTS

A. Store materials in area of installation for minimum period of 24 hours prior to installation.

PART 2 – PRODUCTS

2.1 MATERIALS

A. Manufacturer:
   1. Interface, 1280 W Peachtree St NW, Atlanta, GA 30309. Interface Rep.: Charlie Trainor, charlie.trainor@interface.com, M: 973.715.4669
   2. Substitutions: No substitutions permitted.

B. Carpet Tiles: Style, Color, and Size as specified in Section 09 00 00 Interior Color and Material Specification for CT-1, CT-2, CT-3 and CT-4.

C. Refer to Color and Material Plans for direction of carpet tile.

D. Refer to Color and Material Plans for location of varying styles and/or varying color of carpet tiles selected.

2.2 ACCESSORIES

A. Sub-Floor Filler: Type recommended by flooring material manufacturer.

B. Resilient base shall be as specified in Section 09 65 19 - Resilient Floor Tile and Accessories.

C. Adhesive shall be as recommended by the carpet manufacturer.

PART 3 - EXECUTION

3.1 EXAMINATION AND PREPARATION OF SURFACES

A. Verify that sub-floor surfaces are smooth and flat within tolerances specified for that type of work and are ready to receive carpet tile.

B. Verify that sub-floor surfaces are dust-free and free of substances which would impair bonding of adhesive materials to sub-floor surfaces.

C. Verify that concrete sub-floor surfaces are ready for carpet tile installation by testing for moisture emission rate and alkalinity; obtain instructions if test results are not within limits recommended by carpet tile manufacturer and adhesive materials manufacturer.

D. Remove sub-floor ridges and bumps. Fill minor or local low spots, cracks, joints, holes, and other defects with sub-floor filler.

E. Apply, trowel, and float filler to achieve smooth, flat, hard surface. Prohibit traffic until filler is cured.

F. Vacuum clean substrate.

3.2 INSTALLATION PROCEDURES

A. Material shall be stored in rooms heated to at least 70 degrees F and all rooms in which materials are to be laid shall be continuously heated to at least 70 degrees F from at least 48 hours before installation is started to at least one week after installation is finished.

B. Carpet tile installation to be coordinated with installation of glass partition system in office fronts as applicable. General Contractor to coordinate with all trades, including porcelain tile installation, metal edge and/or reducer required at transitions of tile and carpet tile, luxury vinyl tile and carpet tile, and tile and vct/rubber tile.

C. Carpet products shall be cemented in place with a coating of adhesive cement applied in accordance with the manufacturer's specifications.

D. Vinyl base material shall be adhered in strict accordance with the adhesive manufacturer's recommendations. Where base is to be applied to masonry block backup or other irregular surfaces, apply coat of adhesive on the backup and on the base to allow for filling of voids and to bring to a true plane.

E. Contractor shall delay installation of carpet as long as possible so as to avoid inadvertent damage to new carpet.

3.3 CLEAN-UP

A. Clean and remove cementing materials, spots, and dirt from the exposed surfaces, leaving such surfaces thoroughly clean and in good condition. Base shall be washed and wiped dry.

B. Immediately prior to acceptance of the project, and as directed by the Owner, the carpet shall be thoroughly vacuumed.

C. Upon completion of the Work, all surplus materials, debris, tools, and equipment shall be removed from the site.

END OF SECTION 09 68 13

SECTION 09 72 16 – WALLCOVERING

PART 1 - GENERAL

1.1 SUMMARY

A. Section includes vinyl wallcovering.

1.2 RELATED SECTIONS

A. Section 09 00 00 – Interior Color and Material Specification: Color and material selections.

1.3 REFERENCES

A. ASTM E 84 – Standard Test Method for Surface Burning Characteristics of Building Materials.

B. General Services Administration (GSA) Federal Specifications CCC-W408A and CFFA-W 101-D, Quality Standard for Vinyl Coated Fabric Wallcovering.

1.4 SUBMITTALS

A. See Section 01 33 00 - Administrative Requirements, for submittal procedures.

B. Certificate of Compliance: Submit manufacturer's certification that wallcovering furnished meets or exceeds the architect's specification requirements.

C. Samples: Submit samples of each type and color to be installed for the architect's approval.

D. Product Data: Provide data on specified products, describing physical and performance characteristics; sizes, patterns, colors, and method of installation.

E. Manufacturer's Installation Instructions: Indicate special procedures.

F. Maintenance Data: Include maintenance procedures, recommended maintenance materials, and suggested schedule for cleaning.

1.5 DELIVERY, STORAGE, AND HANDLING

A. Deliver vinyl wallcovering and adhesive to the job site in unbroken or undamaged containers and clearly marked with the supplier's identification label. Store vinyl wallcoverings in a flat position to avoid damage to roll ends. Store materials in a clean, dry storage area with temperature maintained above 55 °F with normal humidity. DO NOT CROSS STACK THIS MATERIAL.

1.6 PROJECT CONDITIONS

A. Areas where wallcovering will be installed shall have a constant minimum temperature of not less than 60 °F for at least seven days prior to and throughout installation period and for seven days thereafter.

1.7 WARRANTY

A. Furnish a written warranty against defects in material or workmanship for five (5) years from the date of shipment.

PART 2 – PRODUCTS

2.1 MATERIALS

A. Manufacturer:
   1. Koroseal, www.koroseal.com. Koroseal Rep.: Tina Rouzaire trouzaire@koroseal.com
   2. Substitutions: No substitutions permitted.

B. Vinyl Wallcovering : Style, Color, and Size as specified in Section 09 00 00 Interior Color and Material Specification for WC-1, WC-2, WC-3, WC-4 and WC-T.
   1. Shall meet Federal Specification CCC-W408A and the CFFA-W 101-D, Quality Standard for Vinyl Coated Fabric Wallcovering. Wallcovering shall be Type II. The vinyl wallcovering shall contain mildew inhibitors.
   2. A 0.37 thick protective film shall be factory applied to the wallcovering surface.
   3. Burning Characteristics: The manufacturer shall certify at the time of shipment that the materials furnished meet the published flame spread and smoke development Fire Hazard Classification Rating(s) of those products when tested according to ASTM-E84 Tunnel Test.
   4. UL Label: All products shall be UL labeled assuring complete compliance with all specifications and requirements through continuous inspection by UL inspectors.

2.2 PROTECTIVE COATING

A. The vinyl wallcovering shall have a protective coating applied to its surface to minimize migration of stains into the vinyl and, therefore, offer stain protection from a variety of staining agents and provide greater ease of cleanability.

2.3 ADHESIVE

A. The adhesive used must be manufacturer's recommended adhesive and must contain mildew inhibitors.

2.4 PRIMERS

A. The primer used must be manufacturer's recommended primer.

PART 3 - EXECUTION

3.1 INSPECTION

A. Installer shall inspect all areas and conditions under which vinyl wallcoverings are to be installed. Installer shall notify the contractor and architect in writing of any conditions detrimental to the proper and timely completion of the installation; work will proceed only when conditions have been corrected and accepted by the installer.

B. Substrate shall be checked with a suitable "Moisture Meter". Moisture shall not exceed 4%.

3.2 SURFACE PREPARATION

A. Wall surfaces shall be free from defects and imperfections that could show through the finished covered surface.

B. Sand-finished plaster shall be smoothed, cinder or cement blocks shall be plastered, or otherwise rendered smooth.

C. For new drywall construction, manufacturer's recommended primer should be used before application of wallcovering for ease of future removal when redecorating.

D. Glossy surfaces shall either be sanded to dull surface, or a coat of manufacturer's recommended primer applied prior to installation of wallcovering.

E. If there is any evidence of mildew, it must be removed, and the wall surface treated to inhibit further mildew growth.

F. All painted surfaces should be evaluated for the possibility of pigment bleed-through. If there is any possibility, a coat of sealer, recommended by the manufacturer, should be applied before application of the wallcovering.

G. Do not install vinyl wallcovering over oil-based wood stains as a bleed-through may occur.

3.3 INSTALLATION

A. Wallcovering shall be installed by experienced workers and contractors in strict accordance with the manufacturer's printed instructions using vinyl wallcovering adhesive recommended by the manufacturer (WHEAT PASTE SHALL NOT BE USED). It is absolutely imperative that installer read the manufacturer's instruction sheet in each roll before installing the vinyl wallcovering. Permanent building light shall be available for installation.

B. Installer, before cutting, shall examine pattern and color and determine that they are the correct pattern and color as specified.

C. Installer shall install each roll in sequence starting with largest roll number and each strip in same sequence as cut from roll. If pattern is not random, examine for repeat design. Some patterns should be lined up, matched or reversed for best results. If necessary, trim selvage deep enough to assure color uniformity.

D. After application of three strips, an inspection should be made and if there are any variations in color or pattern which are felt to be excessive, the wallcovering distributor or manufacturer's representative should be notified for his inspection before any further wallcovering is installed.

E. Always bring material six (6) inches around inside and outside corners being sure to fit into corners to avoid bridging or spanning.

F. The wallcovering should be smoothed to the hanging surface with a stiff bristled sweep brush or a flexible broad-knife to eliminate air bubbles. Avoid burnishing the face of the material.

G. Remove excess adhesive along finished seam immediately after each wallcovering strip is applied. Use of clean, warm water, a natural sponge, and clean towels are recommended for this use. It is very important to change water often to maintain cleanliness.

3.4 CLEAN-UP AT COMPLETION

A. Upon completion of work, remove surplus materials, rubbish and debris, resulting from the wallcovering installation. Leave areas in neat, clean and orderly condition

END OF SECTION 09 72 16

SECTION 09 84 13 – ACOUSTICAL WALL PANELS

PART 1 - GENERAL

1.1 SUMMARY

A. Section includes Xorel Artform; prefabricated acoustical, tackable wall panel.

1.2 RELATED SECTIONS

A. Section 09 00 00 – Interior Color and Material Specification: Color and material selections.

1.3 REFERENCES

A. ASTM C 423 – Standard Test Method for Sound Absorption Coefficients by the Reverberation Room Method.

B. ASTM E 84 – Standard Test Method for Surface Burning Characteristics of Building Materials.

1.4 SUBMITTALS

A. See Section 01 33 00 - Administrative Requirements, for submittal procedures.

B. Shop Drawings: Indicate layout and composition of panels, details, and edge treatments.

C. Product Data: Provide data on specified products, describing physical and performance characteristics; sizes, patterns, colors, and method of installation.

D. Manufacturer's Installation Instructions: Indicate special procedures.

E. Maintenance Data: Include maintenance procedures, recommended maintenance materials, and suggested schedule for cleaning.

1.5 DELIVERY, STORAGE, AND HANDLING

A. Manufacturer Materials to be delivered in protective box and inflated wrapping to specified site.

B. Store materials in a dry place under cover and elevated above grade.

C. Stack no more than 10 boxes on top of each other.

1.3 WARRANTY

A. Warranty Period: 5 years. Any Xorel Artform panels that are defective in workmanship or materials (3M command strips, adhesive, Velcro or suspension hardware*) will be replaced at no charge. The warranty does not cover:
   1. (a) ordinary wear and tear; (b) damaged caused by mold or mildew; (c) unacceptable temperature/humidity variation; (d) improper use; (e) improper maintenance; (f) improper storage or handling; (g) any other damage or problem due to external causes unrelated to any Carnegie Fabric product defect.
   2. *Correct installation method must be used for warranty to be in force. Panels must be used within standard industry limitations.

PART 2 – PRODUCTS

2.1 MATERIALS

A. Manufacturer:
   1. Carnegie Fabrics; 110 North Centre Avenue, Rockville Center NY 11570, www.carnegiefabrics.com. Rep: Michele Silva, msilva@carnegiefabrics.com
   2. Substitutions: No substitutions permitted.

B. Acoustical Wall Panels : Style, Color, and Size as specified in Section 09 00 00 Interior Color and Material Specification for AWP-1.
   1. Fire resistance: This product shall meet the requirements of National Fire Protection Association (NFPA 101) Class A or 1; Flame Spread Index: 10; Smoke Developed Index: 25.

2.2 ACCESSORIES

A. Accessories: Quick Grab (All Purpose Construction Adhesive) for wall mounting of panels.

PART 3 - EXECUTION

3.1 EXAMINATION

A. Inspect all conditions from substrates to mounting where work will be performed.

3.2 INSTALLATION

A. Installation to be done with cooperative adherence to the manufacturers specified instructions.

B. Panels shall be applied directly to mounting area as specified.

3.3 CLEANING AND MAINTENANCE

A. Clean Maintenance Materials: In accordance with manufacturer's recommendations, utilize the following for the upkeep and maintenance of installed project:
   1. Water, solvent and diluted bleach cleanable.
   2. Do not apply too much pressure or over wet the substrate as it may adversely affect the panel alignment and/or bond.

END OF SECTION 09 84 13

SECTION 09 91 13 – EXTERIOR PAINTS AND COATINGS

PART 1 - GENERAL

1.1 SECTION INCLUDES

A. Surface preparation.

B. Field application of paints and other coatings.

1.2 RELATED SECTIONS

A. Section 05 50 00 - Metal Fabrications

B. Section 08 11 13 – Hollow Metal Doors and Frames

1.3 REFERENCES

A. 40 CFR 59, Subpart D - National Volatile Organic Compound Emission Standards for Architectural Coatings; U.S. Environmental Protection Agency; current edition.

B. ASTM D 16 - Standard Terminology for Paint, Related Coatings, Materials, and Applications.

1.4 DEFINITIONS

A. Conform to ASTM D 16 for interpretation of terms used in this section.

1.5 SUBMITTALS

A. See Section 01 33 00 - Submittals, for submittal procedures.

B. Product Data: Provide data on all finishing products, including VOC content.

C. Samples: Submit two paper chip samples, 8-1/2 x 11 inch in size illustrating range of colors and textures available for each surface finishing product scheduled.

D. Samples: Submit two painted samples, illustrating selected colors and textures for each color and system selected with specified coats cascaded. Submit on sheet, 8-1/2 x 11 inch in size.

E. Manufacturer's Instructions: Indicate special surface preparation procedures.

F. Maintenance Data: Submit data on cleaning, touch-up, and repair of painted and coated surfaces.

1.6 QUALITY ASSURANCE

A. Manufacturer’s Qualifications: Company specializing in manufacturing the products specified in this section with minimum ten years documented experience.

B. Applicator Qualifications: Company specializing in performing the work of this section with minimum five years experience.

1.7 DELIVERY, STORAGE AND PROTECTION

A. Deliver products to site in sealed and labeled containers; inspect to verify acceptability.

B. Container Label: Include manufacturer's name, type of paint, brand name, lot number, brand code, coverage, surface preparation, drying time, cleanup requirements, color designation, and instructions for mixing and reducing.

C. Paint Materials: Store at minimum ambient temperature of 45 degrees F and a maximum of 90 degrees F, in ventilated area, and as required by manufacturer's instructions.

1.8 ENVIRONMENTAL REQUIREMENTS

A. Do not apply materials when surface and ambient temperatures are outside the temperature ranges required by the paint product manufacturer.

B. Do not apply exterior coatings during rain or snow, or when relative humidity is outside the humidity ranges required by the paint product manufacturer.

C. Minimum Application Temperatures for Latex Paints: 45 degrees F for interiors; 50 degrees F for exterior; unless required otherwise by manufacturer's instructions.

1.9 EXTRA MATERIALS

A. See Section 01 60 00 - Product Requirements, for additional provisions.

B. Supply two gallons of each color; store where directed.

C. Label each container with color and room locations in addition to manufacturer’s label.

PART 2 - PRODUCTS

2.1 MANUFACTURERS

A. Paints:
1. Benjamin Moore & Co.: www.benjaminmoore.com.
2. Sherwin Williams: www.sherwin-williams.com.

2.2 PAINTS AND COATINGS - GENERAL

A. Paints and Coatings: Manufacturer’s first quality product. Ready mixed, except field-catalyzed coatings. Prepare pigments:
1. To a soft paste consistency, capable of being readily and uniformly dispersed to a homogeneous coating.
2. For good flow and brushing properties.
3. Capable of drying or curing free of streaks or sags.

B. Volatile Organic Compound (VOC) Content:
1. Provide coatings that comply with the most stringent requirements specified in the following:

a. 40 CFR 59, Subpart D--National Volatile Organic Compound Emission Standards for Architectural Coatings.
b. Architectural coatings VOC limits of State in which the project is located.

2. Determination of VOC Content: Testing and calculation in accordance with 40 CFR 59, Subpart D (EPA Method 24), exclusive of colorants added to a tint base and water added at project site; or other method acceptable to authorities having jurisdiction.

C. Chemical Content: The following compounds are prohibited:
1. Aromatic Compounds: In excess of 1.0 percent by weight of total aromatic compounds (hydrocarbon compounds containing one or more benzene rings).
2. Acrolein, acrylonitrile, antimony, benzene, butyl benzyl phthalate, cadmium, di (2-ethylhexyl) phthalate, di-n-butyl phthalate, di-n-octyl phthalate, 1,2-dichlorobenzene, diethyl phthalate, dimethyl phthalate, ethylbenzene, formaldehyde, hexavalent chromium, isophorone, lead, mercury, methyl ethyl ketone, methyl isobutyl ketone, methylene chloride, naphthalene, toluene (methylbenzene), 1,1,1-trichloroethane, vinyl chloride.

2.3 PAINT SYSTEMS - EXTERIOR

A. Concrete Block/Brick Masonry, Opaque, Latex, 3 Coat:
1. One coat of block filler.
2. Flat: Two coats of latex enamel.

B. Ferrous Metals, Primed, Latex, 2 Coat:
1. Touch-up with rust-inhibitive primer recommended by top coat manufacturer.
2. Gloss: Two coats of latex enamel.

2.4 ACCESSORY MATERIALS

A. Accessory Materials: Linseed oil, shellac, turpentine, paint thinners and other materials not specifically indicated but required to achieve the finishes specified; commercial quality.

B. Patching Material: Latex filler.

C. Fastener Head Cover Material: Latex filler.

PART 3 - EXECUTION

3.1 EXAMINATION

A. Verify that surfaces are ready to receive Work as instructed by the product manufacturer.

B. Examine surfaces scheduled to be finished prior to commencement of work. Report any condition that may potentially affect proper application.

C. Test shop-applied primer for compatibility with subsequent cover materials.

3.2 PREPARATION

A. Surface Appurtenances: Remove electrical plates, hardware, light fixture trim, escutcheons, and fittings prior to preparing surfaces or finishing.

B. Surfaces: Correct defects and clean surfaces, which affect work of this section.

C. Marks: Seal with shellac those, which may bleed through surface finishes.

D. Impervious Surfaces: Remove mildew by scrubbing with solution of tetra-sodium phosphate and bleach. Rinse with clean water and allow surface to dry.

E. Concrete and Unit Masonry Surfaces to be Painted: Remove dirt, loose mortar, scale, salt or alkali powder, and other foreign matter. Remove oil and grease with a solution of tri-sodium phosphate; rinse well and allow to dry. Remove stains caused by weathering of corroding metals with a solution of sodium metasilicate after thoroughly wetting with water. Allow to dry.

F. Asphalt, Creosote, or Bituminous Surfaces to be Painted: Remove foreign particles to permit adhesion of finishing materials. Apply compatible sealer or primer.

G. Galvanized Surfaces to be Painted: Remove surface contamination and oils and wash with solvent. Apply coat of etching primer.

H. Uncoated Steel and Iron Surfaces to be Painted: Remove grease, mill scale, weld splatter, dirt, and rust. Where heavy coatings of scale are evident, remove by hand wire brushing or sandblasting; clean by washing with solvent. Apply a treatment of phosphoric acid solution, ensuring weld joints, bolts, and nuts are similarly cleaned. Prime paint entire surface; spot prime after repairs.

I. Shop-Primed Steel Surfaces to be Finish Painted: Sand and scrape to remove loose primer and rust. Feather edges to make touch-up patches inconspicuous. Clean surfaces with solvent. Prime bare steel surfaces.

J. Metal Doors to be Painted: Prime metal door top and bottom edge surfaces.

K. The application of finish painting will be considered an acceptance of the surfaces to be covered. Claims for failure of finish painting resulting from unsatisfactory subsurfaces will not be allowed.

3.3 APPLICATION

A. Apply products in accordance with manufacturer's instructions.

B. Where adjacent sealant is to be painted, do not apply finish coats until sealant is applied.

C. Do not apply finishes to surfaces that are not dry. Allow applied coats to dry before next coat is applied.

D. Apply each coat to uniform appearance. Apply each coat of paint slightly darker than preceding coat unless otherwise approved.

E. Vacuum clean surfaces of loose particles. Use tack cloth to remove dust and particles just prior to applying next coat.

F. Where clear finishes are required, tint fillers to match wood. Work fillers into the grain before set. Wipe excess from surface.

3.4 CLEANING

A. Collect waste material which may constitute a fire hazard, place in closed metal containers, and remove daily from site.

3.5 SCHEDULE - GENERAL

A. Do Not Paint or Finish the Following Items:
   1. Items fully factory-finished unless specifically noted.
   2. Fire rating labels, equipment serial number and capacity labels.
   3. Stainless steel items.

B. Paint the surfaces described below under Schedule - Paint and Coating Systems.

3.6 SCHEDULE – PAINT AND COATING SYSTEMS

A. Concrete Block/Brick Masonry: Finish all exterior surfaces indicated to be painted. Finish all interior surfaces indicated to be painted.

B. Steel Doors and Frames: Finish all surfaces exposed to view.

C. Exterior Structural Steel: Finish all surfaces exposed to view.

D. Steel Fabrications (See Section 05 50 00 - Metal Fabrications): Finish all surfaces exposed to view.

END OF SECTION 09 11 13

SECTION 09 91 23 – INTERIOR PAINTS AND COATINGS

PART 1 - GENERAL

1.1 SECTION INCLUDES

A. Surface preparation.

B. Field application of paints and other coatings.

1.2 RELATED SECTIONS

A. Section 05 50 00 - Metal Fabrications: Shop-primed items.

B. Section 05 51 00 – Concrete Filled Metal Pan Stairs: Shop-primed items.

C. Section 08 11 13 – Hollow Metal Doors and Frames: Shop-primed doors and frames.

D. Section 09 00 00 – Interior Color and Material Specifications: Paint and coatings color and sheen selections.

1.3 REFERENCES

A. 40 CFR 59, Subpart D - National Volatile Organic Compound Emission Standards for Architectural Coatings; U.S. Environmental Protection Agency; current edition.

B. ASTM D 16 - Standard Terminology for Paint, Related Coatings, Materials, and Applications.

1.4 DEFINITIONS

A. Conform to ASTM D 16 for interpretation of terms used in this section.

1.5 SUBMITTALS

A. See Section 01 33 00 - Submittals, for submittal procedures.

B. Product Data: Provide data on all finishing products, including VOC content.

C. Samples: Submit two paper chip samples, 8-1/2 x 11 inch in size illustrating range of colors and textures available for each surface finishing product scheduled.

D. Samples: Submit two painted samples, illustrating selected colors and textures for each color and system selected with specified coats cascaded. Submit on aluminum sheet, 8-1/2 x 11 inch in size.

E. Manufacturer's Instructions: Indicate special surface preparation procedures.

F. Maintenance Data: Submit data on cleaning, touch-up, and repair of painted and coated surfaces.

1.6 QUALITY ASSURANCE

A. Manufacturer’s Qualifications: Company specializing in manufacturing the products specified in this section with minimum ten years documented experience.

B. Applicator Qualifications: Company specializing in performing the work of this section with minimum five years experience.

1.7 DELIVERY, STORAGE AND PROTECTION

A. Deliver products to site in sealed and labeled containers; inspect to verify acceptability.

B. Container Label: Include manufacturer's name, type of paint, brand name, lot number, brand code, coverage, surface preparation, drying time, cleanup requirements, color designation, and instructions for mixing and reducing.

C. Paint Materials: Store at minimum ambient temperature of 45 degrees F and a maximum of 90 degrees F, in ventilated area, and as required by manufacturer's instructions.

1.8 ENVIRONMENTAL REQUIREMENTS

A. Do not apply materials when surface and ambient temperatures are outside the temperature ranges required by the paint product manufacturer.

B. Do not apply exterior coatings during rain or snow, or when relative humidity is outside the humidity ranges required by the paint product manufacturer.

C. Minimum Application Temperatures for Latex Paints: 45 degrees F for interiors; 50 degrees F for exterior; unless required otherwise by manufacturer's instructions.

1.9 EXTRA MATERIALS

A. See Section 01 60 00 - Product Requirements, for additional provisions.

B. Supply two gallons of each color; store where directed.

C. Label each container with color and room locations in addition to manufacturer’s label.

PART 2 – PRODUCTS

2.1 MANUFACTURERS

A. Paints:
1. Benjamin Moore & Co: www.benjaminmoore.com.
2. Refer to Section 09 00 00 Color and Material Specifications for color and sheen selections. Refer to Color and Material Plans for locations.

2.2 PAINTS AND COATINGS - GENERAL

A. Paints and Coatings: Manufacturer's first quality product. Ready mixed, except field-catalyzed coatings. Prepare pigments:
   1. To a soft paste consistency, capable of being readily and uniformly dispersed to a homogeneous coating.
   2. For good flow and brushing properties.
   3. Capable of drying or curing free of streaks or sags.

B. Volatile Organic Compound (VOC) Content:
   1. Provide coatings that comply with the most stringent requirements specified in the following:
      a. 40 CFR 59, Subpart D--National Volatile Organic Compound Emission Standards for Architectural Coatings.
      b. Architectural coatings VOC limits of State in which the project is located.
   2. Determination of VOC Content: Testing and calculation in accordance with 40 CFR 59, Subpart D (EPA Method 24), exclusive of colorants added to a tint base and water added at project site; or other method acceptable to authorities having jurisdiction.

C. Chemical Content: The following compounds are prohibited:
   1. Aromatic Compounds: In excess of 1.0 percent by weight of total aromatic compounds (hydrocarbon compounds containing one or more benzene rings).
   2. Acrolein, acrylonitrile, antimony, benzene, butyl benzyl phthalate, cadmium, di (2-ethylhexyl) phthalate, di-n-butyl phthalate, di-n-octyl phthalate, 1,2-dichlorobenzene, diethyl phthalate, dimethyl phthalate, ethylbenzene, formaldehyde, hexavalent chromium, isophorone, lead, mercury, methyl ethyl ketone, methyl isobutyl ketone, methylene chloride, naphthalene, toluene (methylbenzene), 1,1,1-trichloroethane, vinyl chloride.

2.3 PAINT SYSTEMS - INTERIOR

A. Wood, Opaque, Latex, 3 Coat:
   1. One coat of latex primer sealer.
   2. Semi-gloss: Two coats of latex enamel

B. Concrete Block Masonry, Opaque, Latex, 3 Coat:
   1. One coat of block filler.
   2. Two coats of latex.

C. Ferrous Metals, Primed, Latex, 2 Coat:
   1. Touch-up with latex primer.
   2. Two coats of latex enamel.

D. Gypsum Board: Latex-Acrylic, 2 Coat:
   1. One coat of primer sealer.
   2. One coat of latex-acrylic enamel.

2.4 ACCESSORY MATERIALS

A. Accessory Materials: Linseed oil, shellac, turpentine, paint thinners and other materials

not specifically indicated but required to achieve the finishes specified; commercial quality.

B. Patching Material: Latex filler.

C. Fastener Head Cover Material: Latex filler.

PART 3 - EXECUTION

3.1 EXAMINATION

A. Verify that surfaces are ready to receive Work as instructed by the product manufacturer.

B. Examine surfaces scheduled to be finished prior to commencement of work. Report any condition that may potentially affect proper application.

C. Test shop-applied primer for compatibility with subsequent cover materials.

3.2 PREPARATION

A. Surface Appurtenances: Remove electrical plates, hardware, light fixture trim, escutcheons, and fittings prior to preparing surfaces or finishing.

B. Surfaces: Correct defects and clean surfaces, which affect work of this section.

C. Marks: Seal with shellac those, which may bleed through surface finishes.

D. Impervious Surfaces: Remove mildew by scrubbing with solution of tetra-sodium phosphate and bleach. Rinse with clean water and allow surface to dry.

E. Concrete and Unit Masonry Surfaces to be Painted: Remove dirt, loose mortar, scale, salt or alkali powder, and other foreign matter. Remove oil and grease with a solution of tri-sodium phosphate; rinse well and allow to dry. Remove stains caused by weathering of corroding metals with a solution of sodium metasilicate after thoroughly wetting with water. Allow to dry.

F. Gypsum Board Surfaces to be Painted: Fill minor defects with filler compound. Spot prime defects after repair.

H. Asphalt, Creosote, or Bituminous Surfaces to be Painted: Remove foreign particles to permit adhesion of finishing materials. Apply compatible sealer or primer.

I. Galvanized Surfaces to be Painted: Remove surface contamination and oils and wash with solvent. Apply coat of etching primer.

J. Uncoated Steel and Iron Surfaces to be Painted: Remove grease, mill scale, weld splatter, dirt, and rust. Where heavy coatings of scale are evident, remove by hand wire brushing or sandblasting; clean by washing with solvent. Apply a treatment of phosphoric acid solution, ensuring weld joints, bolts, and nuts are similarly cleaned. Prime paint entire surface; spot prime after repairs.

K. Shop-Primed Steel Surfaces to be Finish Painted: Sand and scrape to remove loose primer and rust. Feather edges to make touch-up patches inconspicuous. Clean

surfaces with solvent. Prime bare steel surfaces.

L. Interior Wood Items to Receive Opaque Finish: Wipe off dust and grit prior to priming. Seal knots, pitch streaks, and sappy sections with sealer. Fill nail holes and cracks after primer has dried; sand between coats. Back prime concealed surfaces before installation.

M. Metal Doors to be Painted: Prime metal door top and bottom edge surfaces.

N. The application of finish painting will be considered an acceptance of the surfaces to be covered. Claims for failure of finish painting resulting from unsatisfactory subsurfaces will not be allowed.

3.3 APPLICATION

A. Apply products in accordance with manufacturer's instructions.

B. Where adjacent sealant is to be painted, do not apply finish coats until sealant is applied.

C. Do not apply finishes to surfaces that are not dry. Allow applied coats to dry before next coat is applied.

D. Apply each coat to uniform appearance. Apply each coat of paint slightly darker than preceding coat unless otherwise approved.

E. Sand wood surfaces lightly between coats to achieve required finish.

F. Vacuum clean surfaces of loose particles. Use tack cloth to remove dust and particles just prior to applying next coat.

G. Where clear finishes are required, tint fillers to match wood. Work fillers into the grain before set. Wipe excess from surface.

3.4 CLEANING

A. Collect waste material which may constitute a fire hazard, place in closed metal containers, and remove daily from site.

3.5 SCHEDULE

A. Do Not Paint or Finish the Following Items:
   1. Items fully factory-finished unless specifically noted.
   2. Fire rating labels, equipment serial number and capacity labels.
   3. Stainless steel items.

B. Paint the surfaces described below under Schedule - Paint and Coating Systems.

3.6 SCHEDULE – PAINT AND COATING SYSTEMS

A. Concrete Block Masonry: Finish all interior surfaces indicated to be painted.

B. Gypsum Surfaces: Finish all surfaces indicated to receive paint.

C. Wood: Finish all surfaces indicated to be painted.

D. Steel Doors and Frames: Finish all surfaces exposed to view.

E. Steel Fabrications (See Section 05 50 00 - Metal Fabrications): Finish all surfaces exposed to view.

F. Metal Stairs (See Section 05 51 00 – Concrete Filled Metal Pan Stairs): Finish all metal surfaces exposed to view.

3.7 SCHEDULE - COLORS

A. Color Schedule: As indicated in Section 09 00 00 - Color and Material Specifications.

END OF SECTION 09 91 23

10 21 13 – COMPACT LAMINATE TOILET COMPARTMENTS

PART 1 - GENERAL

1.1 SECTION INCLUDES

A. Compact Laminate (CL/Solid Phenolic). Moisture Resistant Substrate:
   1. Toilet Compartments
   2. Urinal Privacy Screens

1.2 RELATED REQUIREMENTS

A. Section 06 10 00 - Rough Carpentry, coordination with blocking in walls to secure panels, fascia panels.

B. Section 09 29 00 - Gypsum Board Assemblies, coordination with blocking.

C. Section 10 28 13 - Toilet Accessories.

1.3 SUBMITTALS

A. Product Data: Submit manufacturer's data sheets for each product specified.

B. Shop Drawings: Submit manufacturer’s shop drawings for each product specified, including the following:

   1. Plans, elevations, details of construction and attachment to adjacent construction.
   2. Show anchorage locations and accessory items.
   3. Verify dimensions with field measurements prior to final production of toilet compartments.

1.4 QUALITY ASSURANCE

A. Manufacturer: Provide products manufactured by a company with a minimum of 10 years successful experience manufacturing similar products.

B. Single Source Requirements: To the greatest extent possible provide products from a single manufacturer.

C. Accessibility Requirements: Comply with requirements applicable in the jurisdiction of the project, including but not limited to ICC/ANSI A117.1 - 2009 requirements as applicable.

1.5 DELIVERY, STORAGE, AND HANDLING

A. Deliver, store and handle materials and products in strict compliance with manufacturer's instructions and recommendations. Protect from damage.

1.6 PROJECT CONDITIONS

A. Maintain environmental conditions (temperature, humidity, and ventilation) within limits recommended by manufacturer for optimum results. Do not install products under environmental conditions outside manufacturer's recommended limits.

1.7 WARRANTY

A. Manufacturer’s Warranty: Manufacturer's standard 25 year limited warranty for panels, doors, and stiles against breakage, corrosion, delamination, and defects in factory workmanship. Manufacturer's standard 1 year guarantee against defects in material and workmanship for stainless steel door hardware and mounting brackets.

PART 2 PRODUCTS

2.1 MANUFACTURER

A. Acceptable Manufacturer: Bobrick Washroom Equipment, Inc., which is located at: 6901 Tujunga Ave.; North Hollywood, CA 91605-6213; Tel: 818-764-1000; Fax: 818-765-2700; Email:info@bobrick.com; Web:www.bobrick.com

B. Substitutions: No substitutions.

2.2 COMPACT LAMINATE (SOLID PHENOLIC), MOISTURE RESISTANT SUBSTRATE

A. Compact Laminate (Solid Phenolic) Toilet Partitions: Bobrick DuraLineSeries.
1. Design Type:
a. Standard Height.
1) Door/Panel Height: 58 inches (147 cm).
2) Floor Clearance: 12 inches (30 cm).
2. Privacy Style Partitions: No sightlines with gap-free interlocking doors and stiles routed 0.300 inches (7.6 mm) from the edge to allow 0.175 inch (4.4 mm) overlap to prevent line-of-sight into the toilet compartment. Privacy strips fastened or adhered onto the partition material are not acceptable.
3. Mounting Configuration
a. Floor-mounted, overhead-braced with anodized aluminum headrails, 0.065 inch (1.65 mm) thick with anti-grip profile.
1) Stile Maximum Height: 83 inches (211 cm);

B. Compact Laminate (Solid Phenolic) Urinal Screens: Bobrick DuraLineSeries.
   1. Mounting Configuration:
      a. Floor-anchored standard height
         1) Screen Standard Height: 58 inches (178 cm) with floor clearance: 12 inches (30 cm).
         2) Stile Standard Height: 69 inches (175 cm);

C. Materials: Solidly fused plastic laminate with matte-finish melamine surfaces; integrally bonded colored face sheets and black phenolic-resin core.

D. Edges: Black; brown edges not acceptable.

E. Model, Finish, and Color: As indicated in Section 09 00 00 Color and Material Specification for TP-2.

F. Fire Resistance:
   1. National Fire Protection Association/International Building Code Interior Wall and Ceiling Finish: Class B / Uniform Building Code: Class II.
   2. Flame Spread Index (ASTM E 84): 30 for panels and stiles.
   3. Smoke Developed Index (ASTM E 84): 55 for panels, 20 for stiles.

G. Finished Thickness:
   1. Stiles and Doors: 3/4 inch (19 mm).
   2. Panels and Screens: 1/2 inch (13 mm).

H. Stiles: Floor-anchored stiles furnished with expansion shields and threaded rods.
   1. Leveling Devices: 7 gauge, 3/16 inches (5 mm) thick, corrosion-resistant, chromate-treated, double zinc-plated steel angle leveling bar bolted to stile; furnished with 3/8 inch (10 mm) diameter threaded rods, hex nuts, lock washers, flat washers, spacer sleeves, expansion anchors, and shoe retainers.
   2. Stile Shoes: One-piece, 22 gauge (0.8 mm), 18-8, Type 304 stainless steel, 4 inch (102 mm) height; tops with 90 degree return to stile. One-piece shoe capable of adapting to 3/4 inch (19 mm) or 1 inch (25 mm) stile thickness and capable of being fastened (by clip) to stiles starting at wall line.

I. Wall Posts: Pre-drilled for door hardware, 18-8, Type 304, 16 gauge (1.6 mm) stainless steel with satin finish; 1 inch (25 mm) x 1-1/2 inches (38 mm) x 58 inches high (1473 mm).

J. Anchors: Expansion shields and threaded rods at floor connections as applicable. Threaded rods secured to supports above ceiling as applicable. Supports above ceiling furnished and installed as Work of Section 05 50 00 - Metal Fabrications.

K. Hardware:
   1. Compliance: Operating force of less than 5 lbs. (2.25 kg).
   2. Emergency Access: Hinges, latch allow door to be lifted over keeper from outside compartment on inswing doors.
   3. Materials: 18-8, Type 304, heavy-gauge stainless steel with satin finish.
   4. Doorstops: Prevents inswinging doors from swinging out beyond stile; on outswing doors, doorstop prevents door from swinging in beyond stile.

5. Fastening: Hardware is secured to door and stile with pin-in-head Torx stainless steel machine screws. Hinges, latch and optional door stops secured to door with pin-in-head Torx stainless steel machine screws into factory-installed, threaded brass inserts. Fasteners for hinges latch and optional door stops secured directly into core not acceptable.
    a. Threaded Brass Inserts: Factory-installed; withstand direct pull force exceeding 1500 lbs. (680 kg) per insert.
6. Clothes Hooks: Projecting no more than 1-1/8 inch (29 mm) from face of door. Note: Hook height at barrier-free stalls not to exceed maximum required for barrier-free compliance.
7. Door Latch: Track of door latch prevents inswing doors from swinging out beyond stile; on outswing doors, door keeper prevents door from swinging in beyond stile; 16 gauge (1.6 mm) sliding door latch, 14 gauge (2 mm) keeper.
8. Locking: Door locked from inside by sliding door latch into keeper.
9. Hinge Type:
    a. Full-Height Institutional Hinge.
        1) Hinges: 16 gauge (1.6 mm) stainless steel, self-closing, 3 section hinges.
10. Mounting Brackets:
    a. Full-Height.
        1) Mounting Brackets: 18 gauge (1.2 mm) stainless steel and extend full height of panel.
        2) U-Channels: Secure panels to stiles.
        3) Angle Brackets: Secure stiles-to-walls and panels to walls.

PART 3 – EXECUTION

3.1 PREPARATION

A. Prepare substrates including but not limited to blocking and supports in walls at points of attachment using methods recommended by the manufacturer for achieving the best result for the substrates under the project conditions.
    1. Inspect areas scheduled to receive compartments for correct dimensions, plumbness of walls, and soundness of surfaces that would affect installation of mounting brackets.
    2. Verify spacing of plumbing fixtures to assure compatibility with installation of compartments.

B. If preparation is the responsibility of another installer, notify Architect in writing of deviations from manufacturer's recommended installation tolerances and conditions.

C. Do not proceed with installation until substrates have been properly prepared with blocking and supports in walls at points of and deviations from manufacturer's recommended tolerances are corrected. Commencement of installation constitutes acceptance of conditions.

3.2 PROTECTION

A. All units shall be vinyl covered for protection during shipment and installation.

3.3 INSTALLATION

A. Toilet compartment installation must be performed by a dealer/installer that is trained and authorized by the manufacturer.

B. Install products in strict compliance with manufacturer's written instructions and recommendations, including the following:
1. Verify blocking and supports in walls have been installed properly at points of attachment.
2. Verify location does not interfere with door swings or use of fixtures.
3. Use fasteners and anchors suitable for substrate and project conditions
4. Install units rigid, straight, plumb, and level.
5. Conceal evidence of drilling, cutting, and fitting to room finish.
6. Test for proper operation.
7. Verify that gaps between fascia panels and doors are blocked and ensure privacy.

3.4 ADJUSTING, CLEANING AND PROTECTION

A. Adjust hardware for proper operation after installation. Verify that doors self-close and when from the 90-degree position, the door closes in no fewer than 4 seconds.

B Touch-up, repair or replace damaged products.

C. Clean exposed surfaces of compartments, hardware, and fittings.

END OF SECTION 10 21 13

10 21 14 – STAINLESS STEEL TOILET COMPARTMENTS

PART 1 - GENERAL

1.1 SECTION INCLUDES

A. Stainless Steel:
   1. Toilet Compartments
   2. Urinal Privacy Screens

1.2 RELATED REQUIREMENTS

A. Section 06 10 00 - Rough Carpentry, coordination with blocking in walls to secure panels, fascia panels.

B. Section 09 29 00 - Gypsum Board Assemblies, coordination with blocking.

C. Section 10 28 13 - Toilet Accessories.

1.3 SUBMITTALS

A. Product Data: Submit manufacturer's data sheets for each product specified.

B. Shop Drawings: Submit manufacturer’s shop drawings for each product specified, including the following:

   1. Plans, elevations, details of construction and attachment to adjacent construction.
   2. Show anchorage locations and accessory items.
   3. Verify dimensions with field measurements prior to final production of toilet compartments.

1.4 QUALITY ASSURANCE

A. Manufacturer: Provide products manufactured by a company with a minimum of 10 years successful experience manufacturing similar products.

B. Single Source Requirements: To the greatest extent possible provide products from a single manufacturer.

C. Accessibility Requirements: Comply with requirements applicable in the jurisdiction of the project, including but not limited to ICC/ANSI A117.1 - 2009 requirements as applicable.

1.5 DELIVERY, STORAGE, AND HANDLING

A. Deliver, store and handle materials and products in strict compliance with manufacturer's instructions and recommendations. Protect from damage.

1.6 PROJECT CONDITIONS

A. Maintain environmental conditions (temperature, humidity, and ventilation) within limits recommended by manufacturer for optimum results. Do not install products under environmental conditions outside manufacturer's recommended limits.

1.7 WARRANTY

A. Stainless Steel Finish Warranty: Provide 5-year manufacturer warranty against corrosion or discoloration of stainless steel material properly maintained in accordance with manufacturer's recommendations.

PART 2 PRODUCTS

2.1 MANUFACTURER

A. Acceptable Manufacturer: ASI Global Partitions: www.asi-globalpartitions.com
1. Substitutions: No substitutions.

2.2 METAL TOILET COMPARTMENTS AND SCREENS

A. Toilet Compartments with Integrated Privacy: Stainless steel, sightline blocking molding affixed to hinge and latch sides of door during fabrication. Field-applied, no-sight strips not permitted.
1. Standard Privacy-58; floor-anchored, overhead-braced mounting.

B. Model and Finish: As indicated in Section 09 00 00 Color and Material Specification for TP-1.

C. Design Criteria:
1. Surface Burning Characteristics: Provide assemblies with flame spread index of 25 or less and smoke developed index of 450 or less (Class A), when tested in accordance with ASTM E84.

D. Fabrication:
1. Fabricate toilet compartment components to sizes indicated.
2. Coordinate requirements and provide cutouts for through-partition toilet accessories and reinforcement within panel where required for attachment of grab bars.
3. Provide shoes at pilasters and posts to conceal anchors, supports, and leveling mechanisms.

a. Provide Easy-Stall shoes at floor anchored, overhead braced toilet compartments.
4. Provide manufacturer's standard corrosion-resistant supports, leveling mechanisms, anchors, and anchoring assemblies for pilasters and posts.
5. Floor Anchored, Overhead Braced Units: Provide supports, leveling mechanisms, Easy-Stall shoes, and anchors at pilasters to suit floor conditions.
6. Floor Anchored, Overhead Braced Units with Adjustable Pedestals: Provide adjustable pedestals at pilasters to suit floor conditions.

2.3 COMPONENTS

A. Doors, Panels, and Pilasters: Seamless sheet steel faces, pressure bonded to sound-deadening cellular honeycomb core. Provide doors with integral no-sightline system including integrated privacy component on latch and hinge sides that overlaps adjacent pilasters.
1. Stainless Steel: Satin finish.
2. Panel Faces: 22 gauge, 0.0299 inch (0.76 mm).
3. Door Faces: 22 gauge, 0.0299 inch (0.76 mm).
4. Edge Moldings for Stainless Steel Doors: Integrated sightline continuous roll form 22 gauge, 0.0299 inch (0.76 mm).
5. Pilaster Faces, Braced at Both Ends: 22 gauge, 0.0299 inch (0.76 mm).
6. Side Seams: Interlocking continuous molding strip.
7. Internal Reinforcement: Provide reinforcement of size and material adequate for panel to withstand applied downward load on grab bar of at least 250 lbf (1112 N) without deformation of panel.

2.4 MATERIALS

A. Aluminum Extrusions: ASTM B221 (ASTM B221M), 6063 alloy, T6 temper.

B. Steel Sheet: Galvannealed steel sheet, ASTM A653/A653M, with A40/ZF120 coating.

C. Stainless Steel Sheet: ASTM A240/A240M or ASTM A666, Type 304, stretcher-leveled standard of flatness.

D. Stainless Steel Castings: ASTM A743/A743M.

E. Zamac: ASTM B86, commercial zinc-alloy die castings, chrome plated.

2.5 HARDWARE AND ACCESSORIES

A. Brackets:
1. Stirrup Type: Brushed stainless steel, two per panel connection.

B. Door Hardware: Brushed stainless steel:
1. Hinges: Brushed stainless steel wrap-around pivot hinges, gravity type, adjustable for door close positioning; two per door.

2. Latch and Keeper: Surface-mounted ASI integrated privacy slide latch with occupancy indicator and emergency access.
   Coat Hook: Manufacturer's standard coat hook with rubber bumper; one per compartment, mounted on door. Note: Hook height at barrier-free stalls not to exceed maximum required for barrier-free compliance.
3. Door Pull: Provide door pull for outswinging doors. Provide on both sides of doors designated as accessible.
4. Door Bumper: Provide rubber-tipped door bumpers at out-swinging doors.

C. Attachments, Screws, and Bolts: Stainless steel, tamper-resistant type.
   1. For Attaching Panels and Pilasters to Brackets: Sex-type through-bolts and nuts, tamper-resistant.

2.6 SOURCE QUALITY CONTROL

A. Confirm that exposed surfaces are free of pitting, seam marks, roller marks, stains, discolorations, telegraphing of core material, or other imperfections.

PART 3 – EXECUTION

3.1 PREPARATION

A. Prepare substrates including but not limited to blocking and supports in walls at points of attachment using methods recommended by the manufacturer for achieving the best result for the substrates under the project conditions.
   1. Inspect areas scheduled to receive compartments for correct dimensions, plumbness of walls, and soundness of surfaces that would affect installation of mounting brackets.
   2. Verify spacing of plumbing fixtures to assure compatibility with installation of compartments.

B. If preparation is the responsibility of another installer, notify Architect in writing of deviations from manufacturer’s recommended installation tolerances and conditions.

C. Do not proceed with installation until substrates have been properly prepared with blocking and supports in walls at points of and deviations from manufacturer’s recommended tolerances are corrected. Commencement of installation constitutes acceptance of conditions.

3.2 INSTALLATION

A. Install partitions secure, rigid, plumb, and level in accordance with manufacturer's written instructions.

B. Attach Easy Stall shoe system to floor with 1/4 by 2 inch (6 by 52 mm) screws. Insert pilaster into Easy Stall shoe and secure after height adjustment.

C. Attach panel brackets securely to walls using anchor devices.

D. Attach panels and pilasters to brackets. Locate head rail joints at pilaster centerlines.

E. Verify that gaps between fascia panels and doors are blocked and ensure privacy.

F. Do not permit field touch-up of scratches or damaged finish. Replace damaged or scratched materials with new materials.

3.3 TOLERANCES

A. Maximum variation from true position: 1/4 inch.

B. Maximum variation from plumb: 1/8 inch.

3.4 ADJUSTING, CLEANING AND PROTECTION

A. Adjust and align hardware to uniform clearance at vertical edge of doors, not exceeding 3/16 inch.

B. Adjust hinges to locate doors in fully closed position when unlatched. Return outswing doors to closed position.

C. Adjust adjacent components for consistency of line or plane.

D. Clean exposed surfaces of compartments, hardware, and fittings with materials and cleansers in accordance with manufacturer’s recommendations.

END OF SECTION 10 21 14

SECTION 10 22 19 – DEMOUNTABLE PARTITIONS

PART 1 - GENERAL

1.1 SECTION INCLUDES

A. Demountable glass partitions with integral glass doors and door hardware.

1.2 RELATED SECTIONS

A. Section 08 71 00 – Door Hardware.

1.3 REFERENCES

A. ASTM A 276 - Standard Specification for Stainless Steel Bars and Shapes.

B. ASTM B 221-06 - Standard Specification for Aluminum and Aluminum-Alloy Extruded Bars, Rods, Wire, Profiles, and Tubes.

C. ASTM C 1048-04 - Standard Specification for Heat-Treated Uncoated Glass.

1.4 DESIGN / PERFORMANCE REQUIREMENTS

A. Design Requirements: Design glass partition system to withstand live loads in accordance with applicable Building Code with maximum L/120 deflection.

B. Regulatory Requirements: Provide tempered safety glass for locations subject to human impact as required by the applicable Building Code.

1.5 SUBMITTALS

A. Shop Drawings: Include plans, elevations, and details showing type and thickness of glass, hardware, and accessories.

1.6 QUALITY ASSURANCE

A. Manufacturer Qualifications: Glass partition manufacturer to have minimum five years documented experience in the fabrication of glass partitions of the type required for this project and be capable of providing field service representation during installation.

B. Installer Qualifications: Minimum 2 years documented experience in work of this Section and approved by partition system manufacturer.

1.7 DELIVERY, STORAGE, AND HANDLING

A. Store products in manufacturer's unopened packaging until ready for installation.

B. Protect materials from damage and exposure to moisture.

1.8 SEQUENCING

A. Ensure that locating templates and other information required for installation of products of this section are furnished to affected trades in time to prevent interruption of construction progress.

B. Ensure that products of this section are supplied to affected trades in time to prevent interruption of construction progress.

1.9 PROJECT CONDITIONS

A. Maintain environmental conditions (temperature, humidity, and ventilation) within limits recommended by manufacturer for optimum results. Do not install products under environmental conditions outside manufacturer's absolute limits.

B. Field Measurements: Verify opening dimensions of all-glass partitions by field measurements before fabrication and indicate the measurements on Shop Drawings. Coordinate fabrication schedule with construction progress to avoid delaying the Work.

1.10 COORDINATION

A. Coordinate Work with other operations and installation of adjacent surfaces to avoid damage to installed materials.

B. Coordinate work with adjacent floor, wall, and ceiling construction to accommodate frame anchorage, track, and concealed hardware.

C. Coordinate work with concrete floors and floor finishes for adequate tolerances and clearances between panels and floor finish.

PART 2 - PRODUCTS

2.1 MANUFACTURERS

A. Acceptable Manufacturer: MetroWall, which is located at: 520 Landmark Dr, Congers NY 10920; Toll Free Tel: 888-798-8806; Web: www.metro-wall.com, Email: sales@metro-wall.com

2.2 DOORS

A. Hinged Doors:

1. Frameless glass hinged doors (1/2” thick tempered)

a. Hardware: (Coordinate requirements of this Section with Hardware Sets listed under Section 08 71 00 and Owner’s security requirements under Division 27.)

i. Patch Hardware: Top & Bottom patch hardware with brushed stainless steel or matte black covers. Inserts to accommodate specified pivot hardware.

ii. Top Pivot Hardware: Concealed overhead closer mounted in 2 piece 4” wide x 1 ¾” deep aluminum top track

iii. Bottom Pivot Hardware: Adjustable free-swinging pivot

iv. Matte black ladder-style pull with a brushed finish, 12, 48, or 72” inches long, 1 to 1 ¼” diameter.

a) Lock/Latchblock: 4 ½” x 4” Lockblock to accommodate lockset with 2 ¾” backset/ 3” x 4” latchblock to accommodate 2 ¼” square strike plate. Finish: Matte black. Will accommodate most cylindrical lever sets.

b) Latchset: Lever Model: Matte black “Euro” style right angle lever latchset, passage or locking function.

2.3 FULL HEIGHT GLAZED PARTITION SYSTEM

A. LP full height aluminum & glass partition system as manufactured by Metrowall.

1. Single Glazed

a. 1/2 inch (12 mm) clear tempered glass (polished edges).

B. Top Channel

1. Two-piece extruded aluminum track channels with integral seals. 1 ¾” face x 1 ¼” wide OR 1 ¾” face x 4” wide.

2. Flush filler for door header application. Prep for top pivot.

C. Bottom Channel

1. Extruded aluminum track channel with integral seals. ¾” face x 7/8” wide.

2. Neoprene setting strips. 2 per panel.

D. Wall Trim Channel

1. Extruded aluminum track channel with integral seals. ¾” face x 7/8” wide.

E. Glass Joints

1. Translucent bonding tape (0.060 thickness) OR polycarbonate joint.

2. Micro shim glass as required for proper alignment.

2.4 FINISHES

A. Aluminum: Matte Black.

PART 3 - EXECUTION

3.1 EXAMINATION

A. Do not begin installation until substrates have been properly prepared.

B. Verify wall openings are ready to receive work of this section.

C. Verify concealed overhead structural supports are sized and located properly.

D. If substrate preparation is the responsibility of another installer, notify Architect of unsatisfactory preparation before proceeding.

3.2 PREPARATION

A. Clean surfaces thoroughly prior to installation.

B. Prepare surfaces using the methods recommended by the manufacturer for achieving the best result for the substrate under the project conditions.

3.3 INSTALLATION

A. Install in accordance with manufacturer's instructions and approved Shop Drawings.

B. Use anchorage devices to securely attach assembly to structure.

C. Install components plumb and level, in proper plane, free from warp and twist.

D. Installation Tolerances: Maximum variation from plumb or level: 1/8 inch in 10 feet, maximum misalignment of members abutting end to end: 1/16 inch.

3.4 ADJUSTING

A. Adjust doors for smooth operation throughout full operating range.

3.5 PROTECTION

A. Protect installed products until completion of project.

B. Touch-up, repair or replace damaged products before Substantial Completion.

3.6 CLEANING

A. After installation and adjusting clean metal and glass surfaces to remove dust, loose fibers, fingerprints, adhesives, and other foreign materials.

END OF SECTION 10 22 19

SECTION 10 44 13 - FIRE EXTINGUISHERS, CABINETS AND ACCESSORIES

PART 1 - GENERAL

1.1 SECTION INCLUDES

A. Fire extinguishers.

B. Fire extinguisher cabinets.

C. Accessories.

1.2 REFERENCES

A. NFPA 10 - Standard for Portable Fire Extinguishers; National Fire Protection Association.

B. UL (FPED) - Fire Protection Equipment Directory; Underwriters Laboratories Inc.

1.3 PERFORMANCE REQUIREMENTS

A. Conform to NFPA 10.

B. Provide extinguishers classified and labeled by Underwriters Laboratories Inc. for the purpose specified and indicated.

1.4 SUBMITTALS

A. See Section 01 33 00 - Administrative Requirements, for submittal procedures.

B. Shop Drawings: Indicate cabinet physical dimensions, rough-in measurements for recessed cabinets, wall bracket mounted measurements, and location.

C. Product Data: Provide extinguisher operational features, color and finish, and anchorage details.

D. Manufacturer's Installation Instructions: Indicate special criteria and wall opening coordination requirements.

E. Manufacturer's Certificate: Certify that products meet or exceed specified requirements.

F. Maintenance Data: Include test, refill or recharge schedules and re-certification requirements.

1.5 ENVIRONMENTAL REQUIREMENTS

A. Do not install extinguishers when ambient temperature may cause freezing of extinguisher ingredients.

PART 2 - PRODUCTS

2.1 MANUFACTURERS

A. Fire Extinguishers, Cabinets and Accessories:
   1. JL Industries, Inc: www.jlindustries.com.
   2. Larsen's Manufacturing Co: www.larsensmfg.com.
   3. Potter-Roemer: www.potterroemer.com.
   4. Substitutions: See Section 01 60 00 - Product Requirements.

2.2 FIRE EXTINGUISHERS

A. ABC Multi-purpose Dry Chemical Type: Cast steel tank, with pressure gage and hose.
   1. Product: Potter-Roemer Model No. 3010.
   2. Class ABC.
   3. Size 10 lbs.
   4. UL Rating 2A:10B:C.
   5. Factory Mutual Approved.
   6. Finish: Baked enamel, red color.

2.3 FIRE EXTINGUISHER CABINETS

A. Product: Potter-Roemer Model No. 7060-B-2.

B. Metal: Formed 304 stainless steel sheet with number 4 finish.

C. Cabinet Configuration: Recessed type.

D. Cabinet Mounting Hardware: Appropriate to cabinet. Pre-drill for anchors.

E. Weld, fill, and grind components smooth.

2.4 ACCESSORIES

A. Extinguisher Brackets: Product: Potter-Roemer Model No. 3903. Formed steel, galvanized and enamel finished.

B. Graphic Identification: Fire Extinguisher Label, Potter-Roemer Model FA.

PART 3 - EXECUTION

3.1 EXAMINATION

A. Verify existing conditions before starting work.

B. Verify rough openings for cabinet are correctly sized and located.

3.2 INSTALLATION

A. Install in accordance with manufacturer's instructions.

B. Install cabinets plumb and level in wall openings, comply with barrier free mounting requirements of the accessibility code. Place extinguishers in cabinets.

C. Install surface mounted fire extinguisher brackets in compliance with barrier free mounting requirements of the accessibility code. Place extinguishers in brackets.

D. Secure rigidly in place.

E. Position graphic identification (fire extinguisher label) above each cabinet and surface mounted fire extinguisher. Locate the top edge 84 inches above the finished floor.

3.3 LOCATIONS

A. Locations not to exceed 150 feet on center (75 maximum travel distance to units) as indicated on drawings, and as otherwise directed by local authorities.

B. Review additional locations, if required, with Architect prior to installation.

END OF SECTION 10 44 13

SECTION 10 73 13 – METAL CANOPIES

PART 1 - GENERAL

1.1 DESCRIPTION OF WORK

A. Work in this section includes furnishing and installation of pre-engineered extruded aluminum overhead hanger rod style canopies.

1.2 RELATED SECTIONS

A. Section 05 50 00 – Metal Fabrications

B. Section 07 92 00 – Joint Sealants

1.3 REFERENCES

A. ASTM International (ASTM)

1. ASTM E2950 – 14 – Standard Specification for Metal Canopy Systems

1.4 SYSTEM PERFORMANCE REQUIREMENTS

A. General: Provide a complete metal overhead canopy system, manufacturer's standard mutually dependent components and assemblies that form a metal overhead canopy system.

1.5 SUBMITTALS

A. See Section 01 33 00 - Administrative Requirements, for submittal procedures.

B. Product Data: Include construction details, material descriptions, dimensions of individual components and profiles, and finishes for each type of the following metal canopy system components:

1. Framing system.
2. Roof panels.
3. Fascia panels.
4. Drainage System.

C. Shop Drawings: Canopies are to be pre-engineered by the canopy manufacturer. Submit shop drawings and calculations signed and sealed by a professional engineer licensed in the State of New York. Drawings shall include plans, elevations, sections and details. Field verify dimensions prior to preparation of shop drawings.

D. Samples for Initial Selection: Manufacturer's color charts showing the full range of colors available for each type of the following products with factory-applied color finishes:

1. Deck panels.
2. Fascia Panels.
3. Hanger Rods.

1.6 QUALITY ASSURANCE

A. Source Limitations: Obtain metal canopy and components through one source from a single manufacturer.

1.7 DELIVERY, STORAGE, AND HANDLING

A. Deliver components, sheets, panels, and other manufactured items so as not to be damaged or deformed. Package materials for protection during transportation and handling.

B. Handling: Unload, store, and erect canopy assemblies to prevent bending, warping, twisting, and surface damage.

C. Do not store materials in contact with other materials that might cause staining, denting, or other surface damage.

1.8 WARRANTY

A. Provide manufacturer's standard warranty for materials and finishes.

PART 2 - PRODUCTS

2.1 MANUFACTURER

A. Mapes Canopies, Lincoln NE; phone 1-888-273-1132; fax 1-877-455-6572.
   1. Substitutions: See Section 01 60 00 - Product Requirements.

2.2 MATERIALS

A. Decking to be 3" extruded flat soffit .078 decking

B. Fascia shall be standard 8" extruded "J" style (minimum .125 aluminum)

C. Hanger rods and attachment hardware shall be powder coated to match canopy.

D. Decking and fascia shall be extruded aluminum, alloy 6063-T6.

2.3 FINISHES

A. Finish shall be manufacturer's standard 2-coat Kynar finish, color to be selected from manufacturer's full range.

2.4 FABRICATION

A. All connections shall be mechanically assembled utilizing 3/16” fasteners with a minimum shear stress of 350 lb. Pre-welded or factory-welded connections are not acceptable.

B. Decking shall be designed with interlocking extruded aluminum members with mechanical fasteners field applied to provide structural integrity for the completed assembly.

C. Concealed drainage. Water shall drain from covered surfaces into an integral fascia gutter and directed to the rear for discharge via designated downspouts as indicated on drawings.

PART 3 - EXECUTION

3.1 EXAMINATION

A. Confirm that surrounding area is ready for the canopy installation.

B. Installer shall confirm dimensions and elevations to be as shown on drawings provided by the manufacturer.

C. Erection shall be performed by an approved installer and scheduled after all concrete, masonry and roofing in the area is completed.

3.2 INSTALLATION

A. Install in strict accordance with manufacturer's shop drawings and instructions. Particular attention should be given to protecting the finish during handling and erection.

3.3 CLEANING

A. After installation, entire system shall be left in a clean condition.

END OF SECTION 10 73 13

SECTION 12 25 13 - MOTORIZED ROLLER SHADES

PART 1 GENERAL

1.1 SECTION INCLUDES

A. Roller shades, motorized operation and accessories.
   1. Intelligent encoded electronic drive system.
   2. Motor controls, interfaces, and accessories.

B. Shade fabric.

1.2 RELATED SECTIONS

A. Section 06 10 00 - Rough Carpentry: Wood blocking and grounds for mounting roller shades and accessories.

B. Section 09 29 00 - Gypsum Board Assemblies: Coordination with gypsum board assemblies for installation of shade pockets, closures and related accessories.

C. Section 09 51 00 - Acoustical Ceilings: Coordination with acoustical ceiling systems for installation of shade pockets, closures and related accessories.

D. Division 26 - Electrical: Electric service for motor controls. Electrical and low voltage requirements, internal communication, data transfer, and connection to switches as required.

1.3 REFERENCES

A. ASTM International (ASTM):
   1. ASTM G21 and E 2180 - Standard Practice for Determining Resistance of Synthetic Polymeric Materials to Fungi.

B. National Fire Protection Association (NFPA):
   1. NFPA 70 - National Electrical Code; Most Recent Edition Adopted by Authority Having Jurisdiction, Including All Applicable Amendments and Supplements.
   2. NFPA 701 - Standard Methods of Fire Tests for Flame Propagation of Textiles and Films.

C. Underwriters Laboratories (UL):
   1. UL 325 - Standard for Door, Drapery, Gate, Louver, and Window Operators and Systems; Current Edition, Including All Revisions.

D. Window Covering Manufacturers Association (WCMA):
   1. WCMA A100.1 - Safety of Window Covering Products; 2018.

1.4 ADMINISTRATIVE REQUIREMENTS

A. Coordination:
   1. Where motorized shades are to be controlled by control systems provided under other sections, coordinate the work with other trades to provide compatible products.
   2. Coordinate the work with other trades to provide rough-in of electrical wiring as required for installation of hardwired motorized shades.

B. Preinstallation Meeting: One week prior to commencing work related to this section. Require attendance of all affected installers.

C. Sequencing:
   1. Do not fabricate shades until field dimensions for each opening have been taken with finished conditions in place. "Hold to" dimensions are not acceptable.
   2. Do not install shades until final surface finishes and painting are complete.

1.5 SUBMITTALS

A. See Section 01 33 00 - Administrative Requirements, for submittal procedures.

B. Product Data: Manufacturer's catalog pages and data sheets for products specified including materials, finishes, dimensions, profiles, mountings, and accessories.
   1. Preparation instructions and recommendations.
   2. Styles, material descriptions, dimensions of individual components, profiles, features, finishes , accessories, and operating instructions.
   3. Storage and handling requirements and recommendations.
   4. Mounting details and installation methods.
   5. Manufacturer's Instructions: Include storage, handling, protection, examination, preparation, and installation.
   6. Project Record Documents: Record actual locations of control system components and show interconnecting wiring.
   7. Motorized Shades: Power requirements. Typical wiring diagrams including integration of EDU controllers with building management system, audiovisual and lighting control systems as applicable.

C. Shop Drawings: Plans, elevations, sections, product details, installation details, operational clearances, wiring diagrams and relationship to adjacent work.
   1. Prepare control wiring diagrams based on zones, switching and operational requirements provided by the Architect in electronic format.
   2. Include one-line diagrams, wire counts, coverage patterns, and physical dimensions of each item.
   3. Provide location plan showing all motor locations, switch locations and control zones as per the performance requirements of the specifications. All switches, sensors and other control accessories must clearly be shown and called out in a bill of materials.
   4. Provide elevation drawings showing shade band layout. Indicate any necessary seam or batten locations and align with horizontal mullions where possible.

E. Window Treatment Schedule: For all roller shades. Use same room designations as indicated on the Drawings and include opening sizes and key to typical mounting details.

F. Verification Samples: For each finish product specified, one complete set of shade components, unassembled, demonstrating compliance with specified requirements.
   1. Shadecloth Sample: Mark face of material to indicate interior faces.
      a. Test reports indicating compliance with specified fabric properties.
      b. Verification Samples: 6 inches (150 mm) square, representing actual materials, color and pattern.

G. Warranty: Provide manufacturer's warranty documents as specified in this Section.

1.6 QUALITY ASSURANCE

A. Product Listing Organization Qualifications: An organization recognized by OSHA as a Nationally Recognized Testing Laboratory (NRTL) and acceptable to authorities having jurisdiction.

B. Manufacturer Qualifications: Obtain roller shades system through one source from a single manufacturer with a minimum of ten years experience and minimum of five projects of similar scope and size in manufacturing products comparable to those specified in this section.

C. Installer for Roller Shade System - Qualifications: Installer trained and certified by the manufacturer with a minimum of ten years experience in installing products comparable to those specified in this section.
   1. Requirements for Roller Shade Installer/Contractor:
      a. Roller Shade Hardware, shade fabric, motor, and all related controls shall be furnished and installed as a complete two-way communicating system and assembly.
      b. Roller Shade Installer/Contractor shall list all components and systems included in their bid, including but not limited to, the prime manufacturer of the motor control and automated equipment and shall be financially responsible for any change orders and/or back charges required by the BMS, AV, or Lighting Control Systems contractors to interface with the automatic solar tracking system and the motorized roller shade system.

D. Product Listing Organization Qualifications: Organization recognized by OSHA as a Nationally Recognized Testing Laboratory (NRTL) and acceptable to authorities having jurisdiction.

E. Fire-Test-Response Characteristics: Passes NFPA 701 small and large-scale vertical burn. Materials tested shall be identical to products proposed for use.

F. Electrical Components: NFPA Article 100 listed and labeled by either UL or ETL or other testing agency acceptable to authorities having jurisdiction, marked for intended use, and tested as a system. Individual testing of components will not be acceptable in lieu of system testing.

G. Requirements for Electronic Hardware, Controls, and Switches: Roller shade hardware, shade fabric, EDU (Electronic Drive Unit), and all related controls shall be furnished and installed as a complete two-way communicating system and assembly.

H. Turn-Key Single-Source Responsibility for Wiring Motorized Interior Roller Shades: To control the responsibility for performance of motorized roller shade systems, assign the design, engineering, and installation of motorized roller shade systems, motors, controls, and low voltage electrical control wiring specified in this Section to a single manufacturer and their authorized installer/dealer. The Architect will not produce a set of electrical drawings for the installation of control wiring for the motors, or motor controllers of the motorized roller shades. Power wiring (line voltage), shall be provided by the general contractor ("GC"), not roller shade installer/dealer (Window Coverings Subcontractor or "WC"), in accordance with the requirements provided by the manufacturer. Coordinate the following with the roller shade installer/dealer:
   1. GC shall provide power panels and circuits of sufficient size to accommodate roller shade manufacturer's requirements, as indicated on the mechanical and electrical drawings.
   2. GC shall coordinate with requirements of WC, before inaccessible areas are constructed.
   3. GC shall run line voltage as dedicated home runs (of sufficient quantity, in sufficient capacity as required) terminating in junction boxes in locations designated by WC.
   4. GC shall provide and run all line voltage (from the terminating points) to the motor controllers. WC shall wire all roller shade motors to the motor controllers, and provide and run low voltage control wiring from motor controllers to switch/ control locations designated by the Architect. All above-ceiling and concealed wiring shall be plenum-rated, or installed in conduit (provided by Electrical Subcontractor), as required by the electrical code having jurisdiction.
   5. GC shall provide conduit with pull wire in all areas, which might not be accessible to roller shade contractor due to building design, equipment location or schedule.

1.7 MOCK-UP

A. Provide a mock-up of one roller shade assembly for evaluation of mounting, appearance and accessories.
   1. Locate mock-up in window designated by Architect.
   2. Mockup Size: Full size.
   3. Mockup Size (WxH): 3 x 3 feet (0.94 x 0.94 m) minimum.
   4. Intent of mock-up is to demonstrate quality of workmanship and visual appearance.
   5. If mock-up is not acceptable, rebuild mock-up until satisfactory results are achieved.
   6. Do not proceed with remaining work until, mock-up is accepted by Architect.
   7. Retain mock-up during construction as a standard for comparison with completed work.
   8. Do not alter or remove mock-up until work is completed or removal is authorized.
   9. Full-sized mock-up may become part of the final installation.
   10. Full-sized mock-up will become the property of the Owner to be used for spare parts.

1.8 DELIVERY, STORAGE, AND HANDLING

A. Deliver in factory-labeled packages, marked with manufacturer and product name, fire-test-response characteristics, and location of installation using same room designations indicated on Drawings.

B. Store and handle products per manufacturer's recommendations.

1.9 PROJECT CONDITIONS

A. Environmental Limitations: Install roller shades after finish work including painting is complete and ambient temperature and humidity conditions are maintained at the levels indicated for Project when occupied for its intended use.

B. Power and control wiring shall be complete and certified, fully operational with uninterrupted communication on the lines and minimal noise certified by a commissioning agent specified in other sections.
   1. 485, ICON, Lonmark and Dry Contract Network: Noise on the line not to exceed shade manufacturer's limits.

1.10 WARRANTY

A. Roller Shade Hardware Warranty: Manufacturer's standard non-depreciating, transferrable warranty for interior shading.
   1. Shade Hardware - 10 years unless otherwise indicated:
      a. ElectroShade with Soho shade fabric: 25-years.
   2. All Mecho Shadecloth: Manufacturer's standard 25-year warranty.
   3. Roller Shade Motors, Motor Control Systems, and Accessories: Manufacturer's standard non-depreciating 10-year warranty for AC motors and controls and 10-year warranty for DC motors, power panels and controls. Roller shade low voltage PoE motor and associated wall controller, IDF, plenum located PoE hubs and associated control systems must have manufacturer’s minimum, non-depreciating 10-year warranty. Somfy motors and controls standard 5-year warranty. NuLEDs SpiceBox, keypads, sensors and associated lighting products standard 5-year warranty.
   4. Roller Shade Installation: One year from date of Substantial Completion, not including scaffolding, lifts or other means to reach inaccessible areas, which are deemed owners responsibility.

PART 2 PRODUCTS

2.1 MANUFACTURERS

A. Acceptable Manufacturer for Window Shade Control System as basis of design, performance and warranty: Mecho, which is located at: 42-03 35th St.; Long Island City, NY 11101; ASD Tel: 718-729-2020; Fax: 718-729-2941; Local Representative: Douglas McCoy douglas.mccoy@springswindowfashions.com, Mobile #267-889-3948.

B. No substitutions permitted.

2.2 APPLICATIONS/SCOPE

A. Roller Shade Schedule:
   1. Shade Type: As specified in Section 09 00 00 Interior Color and Material Specification for WIN-1, WIN-2, WIN-3, and WIN-4, and where indicated on Color and Material Drawings.
      a. WIN-1(First Floor): Motorized ‘Single’ Shade in surface-mounted pocket, semi-recessed in ceiling.
      b. WIN-2 (First Floor): Motorized ‘Double’ Shade in no cost pocket, top mount, #13 bracket, semi-recessed in ceiling.
      c. WIN-3 (Second and Third Floors): Motorized ‘Single’ Shade in recessed #4124 pocket bracket system.
      d. WIN-4 (Second and Third Floors): Motorized ‘Double’ Shade in no cost pocket, top mount, #13 bracket, semi-recessed in ceiling.

2.3 ROLLER SHADES, MOTORIZED OPERATION AND ACCESSORIES

A. Shade System; General:
   1. Motorized Shades: Comply with NFPA 70.
   2. Components capable of being removed or adjusted without removing mounted shade brackets or cassette support channel.
   3. Operates smoothly when raising or lowering shades.
   4. Electrical Components: Listed, classified, and labeled as suitable for intended purpose. Test as total system. Individual component testing is acceptable.
      a. Components: FCC compliant where applicable.

B. Basis of Design: ElectroShade with IQ2-DC Motor As manufactured by MechoShade Systems LLC. Motor operated fabric window shade system complete with mounting brackets, roller tubes, hembars, hardware, and accessories.
   1. Brackets and Mounting Hardware: As recommended by manufacturer for mounting indicated and to accommodate shade fabric roll-up size and weight.
      a. Material: Provide shade hardware constructed of minimum 1/8-inch (3.18 mm) thick plated steel, or heavier, thicker, as required to support 150 percent of the full weight of each shade. Plastic components without use of steel angle construction do not meet the intent of this specification and shall not be accepted. Styrene based plastics, and /or polyester, or reinforced polyester shall not be accepted.
      b. Provide shade hardware system that allows for field adjustment of motor or replacement of any operable hardware component without requiring removal of brackets, regardless of mounting position (inside, or outside mount).
      c. All bands within a single motor group shall be aligned within ¼ inch.
   2. Roller Tubes:
      a. Material: Extruded aluminum.
      b. Size: As recommended by manufacturer; selected for suitability for installation conditions, span, and weight of shades.
      c. Fabric Attachment: Utilize extruded channel in tube to accept vinyl spline welded to fabric edge. Shade band to be removable and replaceable without

removing roller tube from brackets or inserting spline from the side of the roller tube.

3. Hembars: Designed to maintain bottom of shade straight and flat.
   a. Style: Full wrap fabric covered bottom bar, flat profile with heat sealed closed ends.
   b. Style: Exposed aluminum bottom bar with matching finials.
      1) Profile: Rectangular.
      2) Color: Manufacturer's standard coordinated with shade fabric selected.

4. Accessories:
   a. Provide all accessories as required for a complete installation.

2.4 INTELLIGENT ENCODED ELECTRONIC DRIVE SYSTEM

A. Low Voltage EDU (24 VDC):
   1. Basis of Design: MechoShade Systems LLC; WhisperShade IQ2-DC System. Tubular, asynchronous, integral DC motor. 24 VDC; temperature Class B, thermally-protected, totally enclosed, maintenance-free. Powered by low voltage power supply connection equipped with disconnect plug assembly furnished with EDU.
   2. Audible Noise: 38 dBA measured 3 ft (914 mm) from motor unit, depending on motor torque.
   3. Nominal Speed: 10 to 28 RPM. Configurable. Speed managed such that it does not vary due to load/lift capacity.
   4. Low voltage power supply for powering external accessories connected to either the dry contact or network port.
      a. Products that require accessories to be powered by a plug-in or externally-supplied power supply are not acceptable.
   5. Wireless Controls: Optional built-in two-way wireless EnOcean controls through iQ3-DC-RF motor.
   6. Override Mode: Place motor into Override Mode when local switch commands shade to new position.
      a. Local switch command sources:
         1) Keypad connected to EDU dry contact inputs.
         2) Third-party system connected to EDU dry contact inputs.
         3) Network keypad or other device that serially communicates with EDU and configured to issue override commands as if it were a local switch connected to EDU dry contact inputs.
      b. Entering Override Mode: Monitor and log positioning commands from automation devices. Do not act until exiting Override Mode.
      c. Return from Override Mode: Position shade to last commanded position in log.
      d. Automated Return from Override Mode:
         1) Override Return Timer: When Override Mode is entered by changing shade position with local switch as described above, Enable override return timer to make these changes temporary such that automation can regain control of shade after configurable time duration (default of 60 minutes).
         2) Pocket temperature sensor integral to EDU to track pocket temperature.

a) When shade is in Override Mode and Heat Gain Sensing is Enabled: Sensor determines when direct sunlight and associated solar heat gain has left the window.
   1) When this condition occurs, after the shade has been overridden to cover the window, EDU to return from Override Mode if Override Return Timer has not done so already in order for automation controllers to once again optimize shade position for exposure to daylight.

7. Preventative Maintenance:
   a. Internally monitor important operating parameters to ensure motor and its shade assembly are functioning properly.
   b. Performance Degradation: Provide visual indication via feedback LED and communicate warnings on repetitive basis through its serial port.
   c. Warning Conditions: Logged and queryable. Allow sending of multiple warnings until condition is acknowledged.
   d. Stop shade rotation for parameters of critical concern until reset by trained technician after being serviced.
   e. Devices capable of receiving warnings include SolarTrac automated solar-evaluation control system.
   f. Tracked Parameters to include:
      1) Operating life (cycles, hours).
      2) Pocket temperature.
      3) Internal motor temperature.
      4) Vibration.
      5) Stall.
      6) Power reset.
      7) Maintenance Mode.
      8) Speed regulation.
      9) Position targeting.
      10) Movement without command.
      11) One Bus availability.
   g. Detectable Potential Warning Conditions to Include:
      1) Assembly vibration/bearing wear warning.
      2) Tube/shade assembly drop.
      3) Fabric hung-up/telescoping.
      4) Motor mount warning.
      5) Lifecycle replacement warning.
      6) Brake/limit failure.
      7) Network warning.
      8) Motor internal temperature warning.
      9) Pocket temperature warning.

B. Modes of Operation:
   1. Uniform Mode: Shades move to defined intermediate stop positions in order to maintain aesthetic uniformity.

2. Normal Mode: Shades move to defined intermediate stop positions and any position between defined upper and lower limits.
3. Maintenance Mode: Prevents shade from moving via dry contact or network control commands mode has been cleared/disabled.

C. Control Methods: Local isolated dry contact input and network control.
1. Local Isolated Dry Contact Inputs:
a. Local switch control, third party system integration without separate interface.
b. Moving EDU/shade to upper and lower limits and local switch preset positions.
c. Configuration of upper and lower limits, custom presets, and key modes of operation without a PC or microprocessor-based tools.
d. Configuration under protected sequences to prevent changes by casual user.
e. Switch Personalities: Configuration of dry contact control port over network such that any type of dry contact keypad/third-party interface and actuation methodology (maintained and/or momentary actuation) can be used to operate shade.
f. Dry Contact Control Connection Options to Include:
1) One-button.
2) Two-button.
3) Three-button. Able to support configuring limits, presets, and key operating modes (default).
4) Three-button. No configuration capability to prevent accidental changes in settings.
2. Network Control:
a. Bi-directional network communication to enable commanding operation of large groups of shades over a common backbone.
b. Each EDU:
1) Support eight network addresses capable of being employed for various levels of group control.
2) Dry Contact Ports: Assigned its own local switch address which can be matched by other EDUs within eight network addresses in order to support group control when dry contact commands are received.
a) The EDU receiving dry contact commands may or may not be configured to operate based on commands coming through its own dry contact input port.
3) To have an independent unique identifier address (UID) enabling EDU to be independently controlled and configured over network via handheld configurator and/or PC controller.
c. Network Communication Card: Integral with tubular EDU assembly.
d. Support configuration of upper and lower limits using either a handheld removable program module/configurator or a local switch.
e. Support configuration of addresses using a handheld removable program module/configurator.

D. Alignment Positions:
1. Repeatable and precisely aligned shade positions and limits.
a. Support positioning commands from 0 to 100 percent in 1 percent increments.
b. Customizable Presets: 32.

c. Include three intermediate dry contact presets
2. Shades on same switch circuit or same network group address with same opening height, to align at each intermediate stopping position when traveling from any position, up or down.
3. Shades of differing heights: Capable of custom, aligned intermediate stop positions when traveling from any position, up or down.
4. Alignment of shade bands mechanically aligned on same EDU: Plus or minus 0.125 inch (3 mm).
5. Alignment of standard shades on adjacent EDUs: Plus or minus 0.25 inch (6 mm) when commanded to same alignment position.

E. Local Switch Presets:
1. Minimum of three customizable preset positions accessible over the local dry contact control inputs and over the network connection.
2. Preset positions: Customizable to any position between and including defined upper and lower limits (initially defaults to 25, 50, and 75 percent of shade travel).
3. Configuration of Custom Preset Positions: A handheld removable program module/configurator or a local switch.

F. Network Presets:
1. Minimum of 32 customizable preset positions (including the three local switch presets) accessible via network commands.
2. Preset positions: Customizable to any position between and including defined upper and lower limits (initially defaults to defined lower limit).
3. Configuration of Custom Preset Positions: A handheld removable program module/configurator or a local switch.

2.5 ROLLER SHADE FABRICATION

A. Field measure finished openings prior to ordering or fabrication.

B. Dimensional Tolerances: Fabricate shades to fit openings within specified tolerances.
1. Vertical Dimensions: Fill Opening from Head to Sill: 1/2 inch (13 mm) space between bottom bar and window sill or finished floor, as applicable.
2. Horizontal Dimensions: Outside mounting.
a. Cover window frames, trim, and casings completely.

C. Openings Requiring Continuous Multiple Shade Units with Separate Rollers: Locate roller joints at window mullion centers; butt rollers end-to-end.

2.6 SHADE FABRIC

A. Basis of Design: Shade fabric as manufactured by MechoShade Systems LLC.
1. Solar Shadecloths:
a. Fabric: Soho: 1600 series. 3 percent open. 2 x 2 basket-weave pattern of fine yarn PVC and polyester blend, also 126 inches (3200 mm) wide.
1) NRC Rating: 0.25.
2) SAA Rating: 0.29.
3) Low-Emitting Material Certification: Greenguard Gold certified and listed in UL (GGG).

4) Health Product Declaration (HPD): Published declaration with full disclosure of known hazards.
Environmental Product Declaration (EPD): Published disclosure of product's environmental impacts based on a full Life Cycle Assessment (LCA). Manufacturer must have EPD certification by independent 3rd party evaluation service.

2. Performance Requirements:
   a. Flammability per NFPA 701: Pass. Large or small scale test.
   b. Fungal Resistance: No growth when tested per ASTM G21.

3. Fabrication:
   a. Fabric Orientation: Railroaded, fabric is turned 90 degrees off the roll.
   b. Battens: Manufacturer's standard material, full width of shade, and enclosed in welded shade fabric pocket; locate as indicated on drawings.
   c. Seams for Railroaded Fabric: Manufacturer's standard seam; locate as indicated on drawings.
   d. Welded Zipper Edge: Full height on both sides of fabric ensuring smooth operation within ShadeLoc channels.

PART 3 EXECUTION

3.1 EXAMINATION

A. Do not begin installation until substrates have been properly prepared.

B. If substrate preparation is the responsibility of another installer, notify Architect of unsatisfactory preparation before proceeding.

C. Start of installation shall be considered acceptance of substrates.

3.2 PREPARATION

A. Clean surfaces thoroughly prior to installation.

B. Prepare surfaces using methods recommended by manufacturer for achieving best result for substrate under the project conditions.

C. Coordinate with window installation and placement of concealed blocking to support shades.

3.3 SYSTEM STARTUP

A. Motorized Shade System: Provide services of a manufacturer's authorized representative to perform system startup.

B. Turn-Key Single-Source Responsibility for Motorized Interior Roller Shades: Design, engineering, and installation of motorized roller shade systems, motors, controls, and low voltage electrical control wiring specified is to be performed by a single manufacturer and their authorized installer/dealer.

1. The Architect will not provide a set of electrical drawings for installation of control wiring for motors, or motor controllers of motorized roller shades.
2. General Contractor (GC) To Provide the Following:
    a. Power Panels and Circuits: Size to accommodate roller shade manufacturer's requirements, as indicated on mechanical and electrical drawings.
    b. Coordinate with requirements of roller shade installer/dealer, before inaccessible areas are constructed.
    c. Line voltage as dedicated home runs, of sufficient quantity, and capacity as required. Terminate in junction boxes at locations designated by roller shade installer/dealer.
    d. Run line voltage from terminating points to motor controllers. Wire roller shade motors to motor controllers.
        1) Above-ceiling and concealed wiring to be plenum-rated, or in conduit, as required by the electrical code having jurisdiction.
    e. Use conduit with pull wire in areas, not accessible to roller shade contractor due to building design, equipment location or schedule.
    f. Verify that wiring conditions, which have been previously installed under other sections or at a previous time, are acceptable for product installation in accordance with manufacturer’s instructions.
    g. Comply with manufacturer’s current product data, including shop drawings, technical bulletins, product catalog installation instructions, and product carton instructions for installation.
    h. Protect installed product and finished surfaces from damage during all phases of installation including preparation, testing, and cleanup.
    i. Be responsible for all other required electrical work including but not limited to roof penetrations, conduits, fireproofing, etc.
    j. Provide conduit with pull wire in all areas, which might not be accessible to subcontractor due to building design, equipment location or schedule.
3. Window Covering Subcontractor (WC) responsibilities:
    a. Shade Control Subcontractor shall furnish, install and fully program shade controllers, interfaces, splitters, coupler, sensors, switches, etc. mounted on the wall, in the ceiling, in shade pocket, etc.. Locations for all visible devices to be coordinated with Architect. The shade control subcontractor shall inspect all material included in this contract prior to installation. Manufacturer shall be notified of unacceptable material prior to installation.
    b. Run low voltage control wiring from motor controllers to switch/control locations designated by Architect.
        1) Above-ceiling and concealed wiring to be plenum-rated, or in conduit, as required by the electrical code having jurisdiction.

C. Integration with 3rd Party Systems:
1. Main contractor shall coordinate and provide for others to furnish, install or program any interfaces or wiring to integrate 3rd party systems to the roller shade control system as specified herein. Integration to shade control network can be accomplished locally through IP via UPoE switch with minimum of 60w output per port.

3.4 INSTALLATION

A. Contractor Furnish and Install Responsibilities:

1. Window Covering Contractor (WC) shall provide an on site, Project Manager, and shall be present for all related jobsite scheduling meetings.
2. WC shall supervise the roller shade installation, and setting of intermediate stops of all shades to assure the alignment of the shade bands within a single EDU group, which shall not exceed +/- 0.125 inches (3.175mm), and to assure the alignment between shade groups, which shall not exceed +/- 0.25” inches (6.35mm).
3. WC shall be responsible for field inspection on an area-by- area and floor-by-floor basis during construction to confirm proper mounting conditions per approved shop drawings.
4. Verification of Conditions: examine the areas to receive the work and the conditions under which the work would be performed and notify General Contractor and Owner of conditions detrimental to the proper and timely completion of the work. Do not proceed until unsatisfactory conditions have been corrected. Commencement of installation shall constitute acceptance of substrate conditions by the installer.
5. WC shall provide accurate to 0.0625” inch (1.5875mm); field measurements for custom shade fabrication on the Roller Shades manufacturers input forms.
6. WC Installer shall install roller shades level, plumb, square, and true according to manufacturer’s written instructions, and as specified here in. Blocking for roller shades furnished and installed under the contract of the interior General Contractor shall be installed plumb, level, and fitted to window mullion as per interior architect’s design documents and in accordance with industry standard tolerances. The horizontal surface of the shade pocket shall not be out-of-level more than 0.625” (15.875mm) over 20 linear feet (6.096 meters)
7. Shades shall be located so the shade band is not closer than 2 inches (50 mm) to the interior face of the glass. Allow proper clearances for window operation hardware.
8. Adjust, align and balance roller shades to operate smoothly, easily, safely, and free from binding or malfunction throughout entire operational range.
9. Installer shall set Upper, Lower and up to 3 intermediate stop positions of all motorized shade bands, and assure alignment in accordance with the above requirements.
10. WC shall certify the operation of all motorized shades and turn over each floor for preliminary acceptance.
11. The WC shall participate and cooperate with the electrical, low voltage and commissioning agent to verify and certify the installation is in full conformance with the specifications and is fully operational. This work to occur during the commissioning stage and is in addition to preliminary acceptance required for each floor.
12. Clean roller shade surfaces after installation, according to manufacturer’s written instructions.
13. WC shall train Owner’s maintenance personnel to adjust, operate and maintain roller shade systems.
    a. Use operation and maintenance manual as a reference, supplemented with additional training materials as required.

3.5 PROTECTION AND CLEANING

A. Protect installed products until completion of project.

B. Touch-up, repair or replace damaged products before Substantial Completion.
   1. Clean soiled shades and exposed components as recommended by manufacturer.
   2. Replace shades that cannot be cleaned to "like new" condition.

END OF SECTION 12 25 13

SECTION 12 36 61 – QUARTZ SURFACING COUNTERTOPS

PART 1 – GENERAL

1.1 SECTION INCLUDES

A. Quartz agglomerate surfacing countertops.

B. Quartz agglomerate backsplashes.

C. Quartz agglomerate endsplashes.

1.2 RELATED SECTIONS

A. Section 06 10 00 – Rough Carpentry.

B. Section 06 41 16 – Plastic-Laminate Clad Architectural Cabinets.

C. Section 12 36 61 – Solid Surfacing Countertops.

1.3 REFERENCES

A. ASTM C 97: Standard Test Methods for Absorption and Bulk Specific Gravity of Dimension Stone.

B. ASTM C 170: Standard Test Method for Compressive Strength of Dimension Stone.

C. ASTM C 501: Standard Test Method for Relative Resistance to Wear of Unglazed Ceramic tile by the Taber Abraser.

D. ASTM C 834: Standard Specification for Latex Sealants.

E. ASTM C 920: Standard Specification for Elastomeric Joint Sealants.

F. ASTM D 790: Standard Test Methods for Flexural Properties of Unreinforced and Reinforced Plastics and Electrical Insulating Materials.

G. ASTM E 84: Standard Test Method for Surface Burning Characteristics of Building Materials

H. NEMA LD-3: High Pressure Decorative Laminates.

I. ISO: International Organization for Standardization.

J. ISO 9001: Quality Management Systems.

K. SCAQMD Rule 1168: Adhesive and Sealant Applications.

1.4 SUBMITTALS

A. Submit under provisions of Section 01 33 00 - Submittals.

B. Product Data:

1. Submit product data for each specified product. Include manufacturer's technical data sheets and published instruction instructions.

C. Shop Drawings:

1. Submit fully dimensioned shop drawings showing countertop layouts,backsplashes, endsplashes, joinery, edge conditions, terminations, substrate construction, cutouts and holes. Show plumbing installation provisions. Include elevations, section details, and large scale details.

D. Samples:

1 Submit selection and verification samples for each color and pattern required.

E Quality Assurance Submittals:

1. Test Reports: Submit certified test reports showing compliance with specified performance characteristics and physical properties, if required.
2. Warranty: Specimen copy of specified warranty.

F. Closeout Submittals:

1 Maintenance Data: Submit manufacturer's published Care & Maintenance manual with closeout submittals.

1.5 QUALITY ASSURANCE

A. Qualifications:

1. Manufacturing Facility Qualifications: Quartz surfacing materials produced in an ISO 9001 certified facility.

2. Fabricator Qualifications: Minimum of five years documented experience in fabricating quartz surfacing countertops similar in scope and complexity to this Project, using water-cooled cutting tools. Currently certified by the manufacturer as an acceptable fabricator.

3. Installer Qualifications: Minimum of five years documented installation experience for projects similar in scope and complexity to this Project, and currently certified by the manufacturer as an acceptable installer.

1.6 DELIVERY, STORAGE, AND HANDLING

A. Delivery and Handling: Comply with manufacturer's recommendations for shipping and handling quartz surfacing materials to preclude breakage or damage. Brace quartz surfacing units as necessary during shipment, transporting in near-vertical position with finished face towards finished face. Do not allow finished surfaces to rub during shipping and handling.

B. Storage and Protection: Store materials protected from exposure to harmful weather conditions, at temperature and humidity conditions recommended by manufacturer. Store quartz surfacing sheet materials on racks in near-vertical position to preclude damage. Store with finished face

turned towards finished face. Prevent warpage and breakage.

1.7 PROJECT CONDITIONS

A. Field Measurements: Verify actual measurements and openings by field measurements before fabrication; show recorded measurements on shop drawings. Coordinate field measurements and fabrication schedule with construction progress to avoid construction delays.

B. Adhesive: Acclimate adhesives to occupancy room temperatures with maximum temperature not to exceed 75 deg F.

1.8 WARRANTY

A. Manufacturer's Limited Warranty: Provide manufacturer's standard 10 Year Commercial Limited Warranty against defects in quartz surfacing sheet materials.

PART 2 – PRODUCTS

2.1 MANUFACTURERS

A. Wilsonart, 2501 Wilsonart Drive, Temple, TX 76503; Wilsonart Rep.: Miguel Mosquera Miguel.mosquera@wilsonart.com T: 551.329.8364.

2.2 QUARTZ SURFACING SHEET MATERIAL

A. Acceptable Product: Wilsonart Quartz.

B. Composition: Up to 93 percent quartz aggregate combined with polyester resin binders and proprietary pigments that are fabricated into slabs using vacuum vibrocompaction technology.

C. Slab Size: 65" X 130"

D. Color and Pattern: As indicated in Section 09 00 00 Interior Color and Material Specification for:

1. QZ-1
2. QZ-2
3. QZ-T

E. Standard Finish: Polished.

F. Thickness: 2 cm

G. Edge: Refer To Details.

H. Countertop Dimensions: Refer to Drawings.

I. Conformance Standards: NSF/ANSI Standard 51.

J. Physical Characteristics:

1. Flexural Strength: Greater than 4,500 psi; ASTM D 790.
2. Flexural Strain: Less than 0.375 percent; ASTM D 790.
3. Flexural Modulus: Greater than 3.75 MPsi; ASTM D 790.
4. Stain Resistance (24 Hour): No effect to moderate effect; NEMA LD-3.
5. Abrasion Resistance: Greater than 100 in.-lbs.; ASTM C 501.
6. Density: Greater than 2.1 g/cm3; ASTM C 97.
7. Compressive Strength (One Axis - Dry): Greater than 20,000 psi; ASTM C 170.
8. Moisture Absorption: Maximum 0.022 percent; ASTM C 97.

2.3 ACCESSORY MATERIALS

A. Joint Adhesive: Methacrylate-based adhesive for chemically bonding quartz surfacing seams. Color complementary to quartz surfacing sheet material. Complies with SCAQMD Rule 1168.

1. Basis of Design: “Wilsonart Hard Surface Adhesive”.

B. Elastomeric Sealant: Mildew-resistant silicone sealant for filling gaps between countertops and terminating substrates in wet environment applications. Complies with ASTM C 920, Type S (single component), Grade NS (nonsag).

1. Product: Acceptable to countertop manufacturer.
2. Color: Complementary to quartz surfacing color.

C. Siliconized Acrylic Sealant: Siliconized acrylic latex sealant. For general applications to fill gaps between countertops and at terminating substrates. Complies with ASTM C 834, Type OP, Grade NF, and SCAQMD Rule 1168.

1. Product: “Wilsonart Color Matched Caulk”.
2. Color: Complementary to quartz surfacing color.

D. Construction Adhesive: Countertop manufacturer’s recommended silicone-based construction adhesive for backsplashes, endsplashes, and other applications according to manufacturer’s published fabrication instructions.

2.4 FABRICATION

A. Fabricate components in shop, to greatest extent practicable, in sizes and shapes indicated according to approved shop drawings and Wilsonart Quartz Fabrication Manual.

B. Form joint seams between quartz surfacing components with specified seam adhesive. Completed joints inconspicuous in appearance and without voids. Provide joint reinforced if required by manufacturer for particular installation conditions.

C. Provide holes and cutouts for plumbing fixtures and accessories indicated on approved shop drawings. Rout cutouts and finish edges smooth.

PART 3 - EXECUTION

3.1 EXAMINATION

A. Examine substrates and conditions that could adversely affect the work of this Section.

B. Substrates must be sound, flat, smooth, and free from dust or other surface contaminants.

C. Commencement of work will constitute acceptance of substrates and conditions to receive the work.

3.2 COUNTERTOP INSTALLATION

A. Install quartz surfacing components plumb, level, and true according to approved shop drawings and manufacturer's published installation instructions. Use woodworking and specialized fabrication tools acceptable to manufacturer.

1. Fasten quartz surfacing components to base cabinets or other supporting substrates with suitable adhesives acceptable to manufacturer.

B. Form joint seams with specified seam adhesive. Seams to be inconspicuous in completed work. Seams in locations shown on approved shop drawings and acceptable to manufacturer. Promptly remove excess adhesive.

1. Clamp or brace quartz surfaces in position until adhesive sets.

C. Fill gaps between countertop and terminating substrates with specified silicone sealant.

D. Install backsplashes and endsplashes where indicated on Drawings. Adhere to countertops with specified construction adhesive.

3.3 REPAIRS

A. If permissible to Architect, minor surface marring for quartz surfacing components may be repaired according to manufacturer's published installation instructions.

B. Remove and replace quartz surfacing components that are damaged and cannot be satisfactorily repaired.

3.4 CLEANING AND PROTECTION

A. Clean quartz surfacing components according to manufacturer's published maintenance instructions. Completely remove excess adhesives and sealants from finished surfaces.

B. Protect completed work from damage during remainder of construction period.

END OF SECTION 12 36 61

SECTION 123663 - SOLID SURFACING COUNTERTOPS

PART 1 - GENERAL

1.1 RELATED DOCUMENTS

A. Drawings and general provisions of the Contract, including General and Supplementary Conditions and Division 01 Specification Sections, apply to this Section.

1.2 SUMMARY

A. Section Includes:

1. Solid surface material countertops.
2. Solid surface material backsplashes.
3. Solid surface material end splashes.
4. Solid surface adhesives and sealants.

1.3 ACTION SUBMITTALS

A. Product Data: For countertop including manufacturer's technical data sheets, and published written instructions.

B. Shop Drawings: For countertops. Show materials, finishes, edge and backsplash profiles, methods of joining, terminations, and cutouts.

1. Show locations and details of joints.
2. Show direction of directional pattern, if any.

C. Samples for Verification: For the following products:

1. Countertop material, 6 inches square.

1.4 CLOSEOUT SUBMITTALS

A. Maintenance Data: For solid surface material countertops to include in maintenance manuals. Include Product Data for care products used or recommended by Installer and names, addresses, and telephone numbers of local sources for products.

1.5 QUALITY ASSURANCE

A. Manufacturer Qualifications: ISO 9001 quality management system certification for manufacturing facility(ies).

B. Fabricator Qualifications: Shop that employs skilled workers who custom-fabricate countertops similar to that required for this Project, and whose products have a record of successful in-service performance.

1. Manufacturer-certified fabricator.

C. Installer Qualifications: Manufacturer certified fabricator of countertops.

1.6 FIELD CONDITIONS

A. Field Measurements: Verify dimensions of countertops by field measurements before countertop fabrication is complete.

1.7 COORDINATION

A. Coordinate locations of utilities that will penetrate countertops or backsplashes.

1.8 WARRANTY

A. Manufacturer's Warranty: Manufacturer and installer agree to repair or replace sheet material not free from defects in materials, fabrication, or workmanship within specified warranty period.

1. Warranty Period: 10 years from date of Substantial Completion.

PART 2 - PRODUCTS

2.1 SOLID SURFACE COUNTERTOPS

A. Composition Solid-Surface Material: Homogeneous-filled plastic resin complying with ICPA SS-1.

1. Basis-of-Design Product: Subject to compliance with requirements, provide Wilsonart LLC, 2501 Wilsonart Drive, Temple, TX 76503; Wilsonart Rep.: Miguel Mosquera Miguel.mosquera@wilsonart.com T: 551.329.8364.
2. Thickness: 1/2 inch
3. Panel Weight: 4.4 lb/sq. ft.
4. Surface-Burning Characteristics: Comply with ASTM E 84; testing by a qualified testing agency. Identify products with appropriate markings of applicable testing agency.
5. Colors and Patterns: As indicated in Section 09 00 00 Interior Color and Material Specification for SS-1.

2.2 COUNTERTOP FABRICATION

A. Fabricate countertops according to solid surface material manufacturer's written instructions and to the AWI/AWMAC/WI's "Architectural Woodwork Standards."

B. Configuration: Refer to drawings.

C. Fabricate tops with shop-applied edges unless otherwise indicated. Comply with solid surface material manufacturer's written instructions for adhesives, sealers, fabrication, and finishing.

1. Fabricate with loose backsplashes for field assembly.

D. Joints: Fabricate countertops without joints.

2.3 INSTALLATION MATERIALS

A. Adhesive: Product recommended by solid surface material manufacturer.

B. Sealant for Countertops: Comply with applicable requirements in Section 07 92 00 "Joint Sealants."

PART 3 - EXECUTION

3.1 EXAMINATION

A. Examine substrates to receive solid surface material countertops and conditions under which countertops will be installed, with Installer present, for compliance with requirements for installation tolerances and other conditions affecting performance of countertops.

B. Proceed with installation only after unsatisfactory conditions have been corrected.

3.2 INSTALLATION

A. Install countertops level to a tolerance of 1/8 inch in 8 feet. Do not exceed 1/64-inch difference between planes of adjacent units.

B. Fasten countertops by adhering with 100-percent silicone material in dab format (not bead format) to base units into underside of countertop at 18 to 24 inches o.c. Align adjacent surfaces and, using adhesive in color to match countertop, form seams to comply with manufacturer's written instructions. Carefully dress joints smooth, remove surface scratches, and clean entire surface.

C. Install backsplashes and end splashes by adhering to wall and countertops with adhesive. Mask areas of countertops and splashes adjacent to joints to prevent adhesive smears.

D. Complete cutouts not finished in shop. Mask areas of countertops adjacent to cutouts to prevent damage while cutting. Make cutouts to accurately fit items to be installed, and at right angles to finished surfaces unless beveling is required for clearance. Ease edges slightly to prevent snipping.

E. Apply sealant to gaps at walls; comply with Section 07 92 00 "Joint Sealants."

END OF SECTION 12 36 63

SECTION 14 24 00 – MACHINE ROOM-LESS HYDRAULIC PASSENGER ELEVATORS

PART 1 - GENERAL

1.1 SUMMARY

A. Section includes: Machine room-less hydraulic passenger elevators as shown and specified. Elevator work includes:
   1. Standard pre-engineered hydraulic passenger elevators.
   2. Elevator car enclosures, hoistway entrances and signal equipment.
   3. Operation and control systems.
   4. Jack(s).
   5. Accessibility provisions for physically disabled persons.
   6. Equipment, machines, controls, systems and devices as required for safely operating the specified elevators at their rated speed and capacity.
   7. Materials and accessories as required to complete the elevator installation.

B. Related Sections:
   1. Division 3 Concrete: Installing inserts, sleeves and anchors in concrete.
   2. Division 4 Masonry: Installing inserts, sleeves and anchors in masonry.
   3. Division 5 Metals:
      a. Providing hoist beams, pit ladders, steel framing, auxiliary support steel and divider beams for supporting guide-rail brackets.
      b. Providing steel angle sill supports and grouting hoistway entrance sills and frames.
   4. Division 9 Finishes: Providing elevator car finish flooring and field painting unfinished and shop primed ferrous materials.
   5. Division 22 Plumbing
      a. Sump pit
   6. Division 23 Heating, Ventilation and Air Conditioning
      a. Heating and ventilating hoistways and/or control room.
   7. Division 26 Sections:
      a. Providing electrical service to elevators, including fused disconnect switches where permitted. (Note: fused disconnect switch to be provided as part of elevator manufacture product)
      b. Emergency power supply, transfer switch and auxiliary contacts.
      c. Heat and smoke sensing devices.
      d. Convenience outlets and illumination in control room (if applicable), hoistway and pit.

C. General contractor shall provide the following in accordance with the requirements of the 2020 Building Code of New York State and ANSI A17.1 Code. For specific rules, refer to ANSI A17.1, Part 3 for hydraulic elevators. State or local requirements must be used if more stringent.
   1. A plumb and legal hoistway, properly framed and enclosed an including a pit of proper depth, and a pit ladder for each elevator. Hoistway walls shall be constructed in accordance with the required fire rating. Hoistway should be clear and plumb with variations not to exceed 1/2" at any point. Provide drains, lights, access doors, waterproofing and hoistway ventilation, as required.

2. Install bevel guards at 75° on all recesses, projections or setbacks over 2" except for loading or unloading.
3. Provide rail bracket supports at pit, each floor and roof. For guide rail bracket supports, provide divider beams between hoistway at each floor and roof.
4. Pit floor shall be level and free of debris. Reinforce dry pit to sustain normal vertical forces from rails and buffers.
5. Where pit access is by means of the lowest hoistway entrance, a vertical ladder of non-combustible material extending 42" minimum, (48" minimum for A17.1-2000 areas) shall be provided at the same height, above sill of access door or handgrips.
6. All wire and conduit should run remote from the hoistways.
7. When heat, smoke or combustion sensing devices are required, connect to elevator control cabinet terminals. Contacts on the sensors should be sided for 12 volt D.C.
8. Install and furnish finished flooring in elevator cab.
9. Finished floors and entrance walls are not to be constructed until after sills and door frames are in place. Consult elevator contractor for rough opening size. The general contractor shall supply the drywall framing so that the wall fire resistance rating is maintained, when drywall construction is used.
10. Where sheet rock or drywall construction is used for front walls, it shall be of sufficient strength to maintain the doors in true lateral alignment. Drywall contractor to coordinate with elevator contractor.
11. Before erection of rough walls and doors; erect hoistway sills, headers, and frames. After rough walls are finished; erect fascias and toe guards. Set sill level and slightly above finished floor at landings.
12. To maintain legal fire rating (masonry construction), door frames are to be anchored to walls and properly grouted in place.
13. The elevator wall shall interface with the hoistway entrance assembly and be in strict compliance with the elevator contractor's requirements.
14. General Contractor shall fill and grout around entrances, as required.
15. All walls and sill supports must be plumb where openings occur.
16. Locate a light fixture (200 lx / 19 fc) and convenience outlet in pit with switch located adjacent to the access door.
17. Provide telephone line, light fixture (200 lx / 19 fc), and convenience outlet in the hoistway at the landing where the elevator controller is located. Typically this will be at the landing above the 1st floor. Final location must be coordinated with elevator contractor.
18. As indicated by elevator contractor, provide a light outlet for each elevator, in center of hoistway.
19. For signal systems and power operated door: provide ground and branch wiring circuits.
20. For car light and fan: provide a feeder and branch wiring circuits to elevator control cabinet.
21. Controller landing wall thickness must be a minimum of 8 1/2 inches thick. This is due to the controller being mounted on the second floor landing in the door frame on the return side of the door. For center opening doors, the controller is located on the right hand frame (from inside the elevator cab looking out). These requirements must be coordinated between the general contractor and the elevator contractor.
22. Cutting, patching and recesses to accommodate hall button boxes, signal fixtures, etc.

1.2 SUBMITTALS

A. Product data: When requested, the elevator contractor shall provide standard cab, entrance and signal fixture data to describe product for approval.

B. Shop drawings:
   1. Show equipment arrangement in the corridor, pit, and hoistway and/or optional control room. Provide plans, elevations, sections and details of assembly, erection, anchorage, and equipment location.
   2. Indicate elevator system capacities, sizes, performances, safety features, finishes and other pertinent information.
   3. Show floors served, travel distances, maximum loads imposed on the building structure at points of support and all similar considerations of the elevator work.
   4. Indicate electrical power requirements and branch circuit protection device recommendations.

C. Powder Coat paint selection: Submit manufacturer's standard selection charts for exposed finishes and materials.

D. Plastic laminate selection: Submit manufacturer's standard selection charts for exposed finishes and materials.

E. Metal Finishes: Upon request, standard metal samples provided.

F. Operation and maintenance data. Include the following:
   1. Owner's manuals and wiring diagrams.
   2. Parts list, with recommended parts inventory.

1.3 QUALITY ASSURANCE

A. Manufacturer Qualifications: An approved manufacturer with minimum 15 years of experience in manufacturing, installing, and servicing elevators of the type required for the project.
   1. The manufacturer of machines, controllers, signal fixtures, door operators cabs, entrances, and all other major parts of elevator operating equipment.
      a. The major parts of the elevator equipment shall be manufactured by the installing company, and not be an assembled system.
   2. The manufacturer shall have a documented, on-going quality assurance program.
   3. ISO-9001:2000 Manufacturer Certified
   4. ISO-14001:2004 Environmental Management System Certified
   5. LEED Gold certified elevator manufacturing facility.

B. Installer Qualifications: The manufacturer or an authorized agent of the manufacturer with not less than 15 years of satisfactory experience installing elevators equal in character and performance to the project elevators.

C. Regulatory Requirements:

1. ASME A17.1 Safety Code for Elevators and Escalators, latest edition or as required by the local building code.
2. 2020 Building Code of New York State.
3. NFPA 70 National Electrical Code.
4. NFPA 80 Fire Doors and Windows.
5. Section 407 in ICC A117.1-2009,

D. Fire-rated entrance assemblies: Opening protective assemblies including frames, hardware, and operation shall comply with ASTM E2074, CAN4-S104 (ULC-S104), UL10(b), and NFPA Standard 80. Provide entrance assembly units bearing 1 hour label by a Nationally Recognized Testing Laboratory.

E. Inspection and testing:

1. Elevator Installer shall obtain and pay for all required inspections, tests, permits and fees for elevator installation.
2. Arrange for inspections and make required tests.
3. Deliver to the Owner upon completion and acceptance of elevator work.

1.4 DELIVERY, STORAGE AND HANDLING

A. Manufacturing shall deliver elevator materials, components and equipment and the contractor is responsible to provide secure and safe storage on job site.

1.5 PROJECT CONDITIONS

A. Temporary Use: Elevators shall not be used for temporary service or for any other purpose during the construction period before Substantial Completion and acceptance by the purchaser unless agreed upon by Elevator Contractor and General Contractor with signed temporary agreement.

1.6 WARRANTY

A. Warranty: Submit elevator manufacturer's standard written warranty agreeing to repair, restore or replace defects in elevator work materials and workmanship not due to ordinary wear and tear or improper use or care for 12 months after final acceptance.

1.7 MAINTENANCE

A. Furnish maintenance and call back service for a period of 12 months for each elevator after completion of installation or acceptance thereof by beneficial use, whichever is earlier, during normal working hours excluding callbacks.
1. Service shall consist of periodic examination of the equipment, adjustment, lubrication, cleaning, supplies and parts to keep the elevators in proper operation. Maintenance work, including emergency call back repair service, shall be performed by trained employees of the elevator contractor during regular working hours.
2. Submit parts catalog and show evidence of local parts inventory with complete list of recommended spare parts. Parts shall be produced by manufacturer of original equipment.

3. Manufacturer shall have a service office and full time service personnel within a 100 mile radius of the project site.

PART 2 - PRODUCTS

2.1 MANUFACTURERS

A. Manufacturer: Design based around TK Elevator's Endura Machine Room-Less hydraulic elevator.

2.2 MATERIALS, GENERAL

A. Colors, patterns, and finishes for all Elevator Cab materials including frame, buttons, lighting, wall and ceiling assembly, laminates and carpet:
   1. As selected by the Architect from manufacturer's full range of standard colors, patterns, and finishes.
B. Steel:
   1. Shapes and bars: Carbon.
   2. Sheet: Cold-rolled steel sheet, commercial quality, Class 1, matte finish.
   3. Finish: Factory-applied baked enamel for structural parts, powder coat for architectural parts. Color selection must be based on elevator manufacturer's standard selections.

C. Plastic laminate: Decorative high-pressure type, complying with NEMA LD3, Type GP-50 General Purpose Grade, nominal 0.050" thickness. Laminate selection must be based on elevator manufacturer's standard selections.

D. Finished flooring (maximum 3/4" thick) is furnished and installed by others.

2.3 HOISTWAY EQUIPMENT

A. Platform: Fabricated frame of formed or structural steel shapes, gusseted and rigidly welded with a wood sub-floor. Underside of the platform shall be fireproofed. The car platform shall be designed and fabricated to support one-piece loads weighing up to 25% of the rated capacity.

B. Sling: Steel stiles bolted or welded to a steel crosshead and bolstered with bracing members to remove strain from the car enclosure.

C. Guide Rails: Steel, omega shaped, fastened to the building structure with steel brackets.

D. Guides: Slide guides shall be mounted on top and bottom of the car.

E. Buffers: Provide substantial buffers in the elevator pit. Mount buffers on continuous channels fastened to the elevator guide rail or securely anchored to the pit floor. Provide extensions if required by project conditions.

F. Jack: A jack unit shall be of sufficient size to lift the gross load the height specified. Factory test jack to ensure adequate strength and freedom from leakage. Brittle material, such as gray cast

iron, is prohibited in the jack construction. Provide the following jack type: Twin post holeless telescopic 2-stage. Two jacks piped together, mounted one on each side of the car with each having three telescopic sections designed to extend in a synchronized manner when oil is pumped into the Assembly. Each jack section will be guided from within the casing or the plunger assembly used to house the section. Each plunger shall have a high pressure sealing system which will not allow for seal movement or displacement during the course of operation. A follower guide shall be furnished for the top of the lower two plungers and be guided by rollers running inside a steel guide channel which is firmly attached to the guide rail system. This plunger guide system shall maintain a stabilized support for the plunger sections. Each Jack Assembly shall have check valves built into the assembly to allow for automatically re-syncing the three plunger sections by moving the jack to its fully contracted position.

G. Automatic Self-Leveling: Provide each elevator car with a self-leveling feature to automatically bring the car to the floor landings and correct for over travel or under travel. Self-leveling shall, within its zone, be automatic and independent of the operating device. The car shall be maintained approximately level with the landing irrespective of its load.

H. Wiring, Piping, and Oil: Provide all necessary hoistway wiring in accordance with the National Electrical Code. All necessary code compliant pipe and fittings shall be provided to connect the power unit to the jack unit. Provide proper viscosity grade inherently biodegradable oil as specified by the manufacturer of the power unit (see Power Unit section 2.04.G for further details)

I. Pit moisture/water sensor located approximately 1 foot above the pit floor to be provided. Once activated, elevator will perform “flooded pit operation”, which will run the car up to the designated floor, cycle the doors and shut down and trip the circuit breaker shunt to remove 3 phase power from all equipment, including pit equipment.

J. Motorized oil line shut-off valve shall be provided that can be remotely operated from the controller landing service panel. Also a means for manual operation at the valve in the pit is required.

2.4 POWER UNIT

A. Power Unit (Oil Pumping and Control Mechanism): A self-contained unit located in the elevator pit consisting of the following items:
   1. NEMA 4/Sealed Oil reservoir with tank cover including vapor removing tank breather
   2. An oil hydraulic pump.
   3. An electric motor.
   4. Electronic oil control valve with the following components built into single housing; high pressure relief valve, check valve, automatic unloading up start valve, lowering and leveling valve, and electro-magnetic controlling solenoids.

B. Pump: Positive displacement type pump specifically manufactured for oil-hydraulic elevator service. Pump shall be designed for steady discharge with minimum pulsation to give smooth and quiet operation. Output of pump shall not vary more than 10 percent between no load and full load on the elevator car.

C. Motor: Standard manufacture motor specifically designed for oil-hydraulic elevator service. Duty rating – motors shall be capable of 80 starts per hour with a 30% motor run time during each start.

D. Oil Control Unit: The following components shall be built into a single housing. Welded manifolds with separate valves to accomplish each function are not acceptable. Adjustments shall be accessible and be made without removing the assembly from the oil line.
   1. Relief valve shall be adjustable and be capable of bypassing the total oil flow without increasing back pressure more than 10 percent above that required to barely open the valve.
   2. Up start and stop valve shall be adjustable and designed to bypass oil flow during start and stop of motor pump assembly. Valve shall close slowly, gradually diverting oil to or from the jack unit, ensuring smooth up starts and up stops.
   3. Check valve shall be designed to close quietly without permitting any perceptible reverse flow.
   4. Lowering valve and leveling valve shall be adjustable for down start speed, lowering speed, leveling speed and stopping speed to ensure smooth "down" starts and stops. The leveling valve shall be designed to level the car to the floor in the direction the car is traveling after slowdown is initiated.
   5. Provided with constant speed regulation in both up and down direction. Feature to compensate for load changes, oil temperature, and viscosity changes.
   6. Solid State Starting: Provide an electronic starter featuring adjustable starting currents.
   7. A secondary hydraulic power source (powered by 110VAC single phase) must be provided. This is required to be able to raise (reposition) the elevator in the event of a system component failure (i.e. pump motor, starter, etc.)
   8. Oil Type: Provide a zinc free, inherently biodegradable lubricant formulated with premium base stocks to provide outstanding protection for demanding hydraulic systems, especially those operating in environmentally sensitive areas.

2.5 HOISTWAY ENTRANCES

A. Doors and Frames: Provide complete hollow metal type hoistway entrances at each hoistway opening bolted\knock down construction.
   1. Manufacturer's standard entrance design consisting of hangers, doors, hanger supports, hanger covers, fascia plates (where required), sight guards, and necessary hardware.
   2. Main landing door & frame finish: ASTM A1008 steel panels, factory applied powder coat finish with factory-applied powder coat finish entrance frame.
   3. Typical door & frame finish: ASTM A366 steel panels, factory applied powder coat enamel finish with factory-applied powder coat finish entrance frame.

B. Integrated Control System: the elevator controller to be mounted to hoistway entrance above 1st landing. The entrance at this level, shall be designed to accommodate the control system and provide a means of access to critical electrical components and troubleshooting features. See section 2.09 Control System for additional requirements.

C. At the controller landing, the hoistway entrance frame shall have space to accommodate and provide a lockable means of access (group 2 security) to a 3 phase circuit breaker. See section 2.11 Miscellaneous Elevator Components for further details

D. Interlocks: Equip each hoistway entrance with an approved type interlock tested as required by code. Provide door restriction devices as required by code.

E. Door Hanger and Tracks: Provide sheave type two point suspension hangers and tracks for each hoistway horizontal sliding door.
   1. Sheaves: Polyurethane tires with ball bearings properly sealed to retain grease.
   2. Hangers: Provide an adjustable device beneath the track to limit the up-thrust of the doors during operation.
   3. Tracks: Drawn steel shapes, smooth surface and shaped to conform to the hanger sheaves.

F. Hoistway Sills: Extruded metal, with groove(s) in top surface. Provide mill finish on aluminum.

2.6 PASSENGER ELEVATOR CAR ENCLOSURE

A. Car Enclosure:
   1. Walls: Cab type TKAP, reinforced cold-rolled steel with two coats factory applied baked enamel finish, with applied vertical wood core panels covered on both sides with high pressure plastic laminate.
   2. Reveals and frieze: a. Reveals and frieze: Powder Coated
   3. Canopy: Cold-rolled steel with hinged exit.
   4. Ceiling: Downlight type, metal pans with suspended LED downlights and dimmer switch. Number of downlights shall be dependent on platform size with a minimum of six. The metal pans shall be finished with a stainless steel, no. 4 brushed finish.
   5. Cab Fronts, Return, Transom, Soffit and Strike: Provide panels faced with brushed stainless steel
   6. Doors: Horizontal sliding car doors reinforced with steel for panel rigidity. Hang doors on sheave type hangers with polyurethane tires that roll on a polished steel track and are guided at the bottom by non-metallic sliding guides.
      a. Door Finish: Stainless steel panels: No. 4 brushed finish.
      b. Cab Sills: Extruded aluminum, mill finish.
   7. Handrail: Provide 1.5' diameter cylindrical metal on side and rear walls on front opening cars and side walls only on front and rear opening cars. Handrails shall have a stainless steel, no. 4 brushed finish.
   8. Ventilation: Manufacturer’s standard exhaust fan, mounted on the car top.
   9. Protection pads and buttons: Provide one set of vinyl protection pads with metal grommets for the project. Provide pad buttons on cab front(s) and walls.

B. Car Top Inspection: Provide a car top inspection station with an “Auto-Inspection” switch, an "emergency stop" switch, and constant pressure "up and down" direction and safety buttons to make the normal operating devices inoperative. The station shall give the inspector complete

control of the elevator. The car top inspection station shall be mounted in the door operator assembly.

2.7 DOOR OPERATION

A. Door Operation: Provide a direct or alternating current motor driven heavy duty operator designed to operate the car and hoistway doors simultaneously. The door control system shall be digital closed loop and the closed loop circuit shall give constant feedback on the position and velocity of the elevator door. The motor torque shall be constantly adjusted to maintain the correct door speed based on its position and load. All adjustments and setup shall be through the computer based service tool. Door movements shall follow a field programmable speed pattern with smooth acceleration and deceleration at the ends of travel. The mechanical door operating mechanism shall be arranged for manual operation in event of power failure. Doors shall automatically open when the car arrives at the landing and automatically close after an adjustable time interval or when the car is dispatched to another landing. AC controlled units with oil checks, or other deviations are not acceptable.

1. No Un-Necessary Door Operation: The car door shall open only if the car is stopping for a car or hall call, answering a car or hall call at the present position or selected as a dispatch car.
2. Door Open Time Saver: If a car is stopping in response to a car call assignment only (no coincident hall call), the current door hold open time is changed to a shorter field programmable time when the electronic door protection device is activated.
3. Double Door Operation: When a car stops at a landing with concurrent up and down hall calls, no car calls, and no other hall call assignments, the car door opens to answer the hall call in the direction of the car's current travel. If an onward car call is not registered before the door closes to within 6 inches of fully closed, the travel shall reverse and the door shall reopen to answer the other call.
4. Nudging Operation: The doors shall remain open as long as the electronic detector senses the presence of a passenger or object in the door opening. If door closing is prevented for a field programmable time, a buzzer shall sound. When the obstruction is removed, the door shall begin to close at reduced speed. If the infra-red door protection system detects a person or object while closing on nudging, the doors shall stop and resume closing only after the obstruction has been removed.
5. Door Reversal: If the doors are closing and the infra-red beam(s) is interrupted, the doors shall reverse and reopen. After the obstruction is cleared, the doors shall begin to close.
6. Door Open Watchdog: If the doors are opening, but do not fully open after a field adjustable time, the doors shall recycle closed then attempt to open six times to try and correct the fault.
7. Door Close Watchdog: If the doors are closing, but do not fully close after a field adjustable time, the doors shall recycle open then attempt to close six times to try and correct the fault.
8. Door Close Assist: When the doors have failed to fully close and are in the recycle mode, the door drive motor shall have increased torque applied to possibly overcome mechanical resistance or differential air pressure and allow the door to close.

B. Door Protection Device: Provide a door protection system using microprocessor controlled infra-red light beams. The beams shall project across the car opening detecting the presence of a passenger or object. If door movement is obstructed, the doors shall immediately reopen.

2.8 CAR OPERATING STATION

A. Car Operating Station, General: The main car control in each car shall contain the devices required for specific operation mounted in an integral swing return panel requiring no applied faceplate. Wrap return shall have a brushed stainless steel finish. The main car operating panel shall be mounted in the return and comply with handicap requirements. Pushbuttons that illuminate using long lasting LEDs shall be included for each floor served, and emergency buttons and switches shall be provided per code. Switches for car light and accessories shall be provided.

B. Emergency Communications System: Integral phone system provided.

C. Column Mounted Car Riding Lantern: A car riding lantern shall be installed in the elevator cab and located in the entrance. The lantern, when illuminated, will indicate the intended direction of travel. The lantern will illuminate and a signal will sound when the car arrives at a floor where it will stop. The lantern shall remain illuminated until the door(s) begin to close.

2.9 CONTROL SYSTEMS

A. Controller: Shall be integrated in a hoistway entrance jamb. Should be microprocessor based, software oriented and protected from environmental extremes and excessive vibrations in a NEMA 1 enclosure. Control of the elevator shall be automatic in operation by means of push buttons in the car numbered to correspond to floors served, for registering car stops, and by "up-down" push buttons at each intermediate landing and "call" push buttons at terminal landings.

B. Service Panel – to be located outside the hoistway in the controller entrance jamb and shall provide the following functionality/features:
   1. Access to main control board and CPU
   2. Main controller diagnostics
   3. Main controller fuses
   4. Universal Interface Tool (UIT)
   5. Remote valve adjustment
   6. Electronic motor starter adjustment and diagnostics
   7. Operation of pit motorized shut-off valve with LED feedback to the state of the valve in the pit
   8. Operation of auxiliary pump/motor (secondary hydraulic power source)
   9. Operation of electrical assisted manual lowering
   10. Provide male plug to supply 110VAC into the controller
   11. Run/Stop button

C. Automatic Light and Fan shut down: The control system shall evaluate the system activity and automatically turn off the cab lighting and ventilation fan during periods of inactivity. The settings shall be field programmable.

D. Emergency Power Operation: (10-DOA) Upon loss of the normal power supply, building-supplied standby power is available on the same wires as the normal power supply. Once the loss of normal power is detected and standby power is available, the elevator is lowered to a pre-designated landing and the doors are opened. After passengers have exited the elevator, the doors are closed and the car is shut down. When normal power is restored, the elevator automatically resumes operation.

2.10 HALL STATIONS

A. Hall Stations, General: Buttons shall illuminate to indicate call has been registered at that floor for the indicated direction.
   1. Provide one pushbutton riser with faceplates having a brushed stainless steel finish.
      a. Phase 1 firefighter's service key switch, with instructions, shall be incorporated into the hall station at the designated level.

B. Floor Identification Pads: Provide door jamb pads at each floor. Jamb pads shall comply with ICC A117.1-2017 requirements and Chapter 11 of the 2020 Building Code of New York State.

2.11 MISCELLANEOUS ELEVATOR COMPONENTS

A. Oil Hydraulic Silencer: Install multiple oil hydraulic silencers (muffler device) at the power unit location. The silencers shall contain pulsation absorbing material inserted in a blowout proof housing.

B. Lockable three phase circuit breaker with auxiliary contact with shunt trip capability to be provided. Circuit breaker to be located behind locked panel (Group 2 security access) at controller landing entrance jamb and should be sized according to the National Electrical Code.

C. Lockable single phase 110V circuit breaker for cab light and fan to be provided. Circuit breaker to be located behind locked panel (Group 2 security access) at controller landing entrance jamb should be sized according to the National Electrical Code.

PART 3 - EXECUTION

3.1 EXAMINATION

A. Before starting elevator installation, inspect hoistway, hoistway openings, pits and/or control room, as constructed, verify all critical dimensions, and examine supporting structures and all other conditions under which elevator work is to be installed. Do not proceed with elevator installation until unsatisfactory conditions have been corrected in a manner acceptable to the installer.

B. Installation constitutes acceptance of existing conditions and responsibility for satisfactory performance.

3.2 INSTALLATION

A. Install elevator systems components and coordinate installation of hoistway wall construction.
   1. Work shall be performed by competent elevator installation personnel in accordance with ASME A17.1, manufacturer's installation instructions and approved shop drawings.
   2. Comply with the National Electrical Code for electrical work required during installation.

B. Perform work with competent, skilled workmen under the direct control and supervision of the elevator manufacturer's experienced foreman.

C. Supply in ample time for installation by other trades, inserts, anchors, bearing plates, brackets, supports, and bracing including all setting templates and diagrams for placement.

D. Welded construction: Provide welded connections for installation of elevator work where bolted connections are not required for subsequent removal or for normal operation, adjustment, inspection, maintenance, and replacement of worn parts. Comply with AWS standards for workmanship and for qualification of welding operators.

E. Coordination: Coordinate elevator work with the work of other trades, for proper time and sequence to avoid construction delays. Use benchmarks, lines, and levels designated by the Contractor, to ensure dimensional coordination of the work.

F. Install machinery, guides, controls, car and all equipment and accessories to provide a quiet, smoothly operating installation, free from side sway, oscillation or vibration.

G. Alignment: Coordinate installation of hoistway entrances with installation of elevator guide rails for accurate alignment of entrances with cars. Where possible, delay final adjustment of sills and doors until car is operable in shaft. Reduce clearances to minimum safe, workable dimensions at each landing.

H. Erect hoistway sills, headers, and frames before erection of rough walls and doors; erect fascia and toe guards after rough walls finished. Set sill units accurately aligned and slightly above finish floor at landings.

I. Lubricate operating parts of system, where recommended by manufacturer.

3.3 FIELD QUALITY CONTROL

A. Acceptance testing: Upon completion of the elevator installation and before permitting use of elevator, perform acceptance tests as required and recommended by Code and governing

regulations or agencies. Perform other tests, if any, as required by governing regulations or agencies.

B. Advise Owner, Contractor, Architect, and governing authorities in advance of dates and times tests are to be performed on the elevator.

3.4 ADJUSTING

A. Make necessary adjustments of operating devices and equipment to ensure elevator operates smoothly and accurately.

3.5 CLEANING

A. Before final acceptance, remove protection from finished surfaces and clean and polish surfaces in accordance with manufacturer's recommendations for type of material and finish provided. Stainless steel shall be cleaned with soap and water and dried with a non-abrasive surface; it shall not be cleaned with bleach-based cleansers.

B. At completion of elevator work, remove tools, equipment, and surplus materials from site. Clean equipment rooms and hoistway. Remove trash and debris.
   1. Use environmentally preferable and low VOC emitting cleaners for each application type. Cleaners that contain solvents, pine and/or citrus oils are not permitted.

3.6 PROTECTION

A. At time of Substantial Completion of elevator work, or portion thereof, provide suitable protective coverings, barriers, devices, signs, or other such methods or procedures to protect elevator work from damage or deterioration. Maintain protective measures throughout remainder of construction period.

3.7 DEMONSTRATION

A. Instruct Owner's personnel in proper use, operations, and daily maintenance of elevators. Review emergency provisions, including emergency access and procedures to be followed at time of failure in operation and other building emergencies. Train Owner's personnel in normal procedures to be followed in checking for sources of operational failures or malfunctions.

B. Make a final check of each elevator operation, with Owner's personnel present, immediately before date of substantial completion. Determine that control systems and operating devices are functioning properly.

3.8 ELEVATOR SCHEDULE

A. Elevator #1:
   1. Elevator Model: Endura MRL Twinpost above-ground 2-stage
   2. Elevator Type: Hydraulic Machine Room-Less, Passenger
   3. Rated Capacity: 3,500 lbs.
   4. Rated Speed: 150 ft./min.
   5. Operation System: TAC32H
   6. Travel: 27'-0"
   7. Landings: 3 total
   8. Openings:
      a. Front: 3
      b. Rear: 0
   9. Clear Car Inside: 6'-8" wide x 5'-5" deep
   10. Inside clear height: 7'-4" standard
   11. Door clear height: 7'-0" standard
   12. Hoistway Entrance Size: 3'-6" wide x 7'-0" high
   13. Door Type: One-speed | RH Side opening
   14. Power Characteristics: 460 volts, 3 Phase, 60 Hz.
   15. Seismic Requirements: Design Category B.
   16. Hoistway Dimensions: 8'-4" wide x 6'-11" deep
   17. Pit Depth: 5'-0"
   18. Button & Fixture Style: Traditional Signal Fixtures

B. Elevator #2:
   1. Elevator Model: Endura HMRL Twinpost above-ground 2-stage
   2. Elevator Type: Hydraulic Machine Room-Less, Passenger
   3. Rated Capacity: 4,000 lbs.
   4. Rated Speed: 150 ft./min.
   5. Operation System: TAC32H
   6. Travel: 27'-0"
   7. Landings: 3 total
   8. Openings:
      a. Front: 3
      b. Rear: 0
   9. Clear Car Inside: 7'-8" wide x 5'-5" deep
   10. Inside clear height: 7'-4" standard
   11. Door clear height: 7'-0" standard
   12. Hoistway Entrance Size: 3'-6" wide x 7'-0" high
   13. Door Type: One-speed | RH Side opening
   14. Power Characteristics: 460 volts, 3 Phase, 60 Hz.
   15. Seismic Requirements: Design Category B.
   16. Hoistway Dimensions: 8'-4" wide x 6'-11" deep
   17. Pit Depth: 5'-0"
   18. Button & Fixture Style: Traditional Signal Fixtures

END OF SECTION 14 24 00

ORANGE & ROCKLAND UTILITIES, INC
SVOC NEW OFFICE ADDITION

Tax Map ID 56.52-1-2
390 West Route 59
Village of Spring Valley
Town of Ramapo
Rockland County, New York

FIRE SUPPRESSION
TECHNICAL SPECIFICATIONS

PREPARED BY

OMDEX INCORPORATED CONSULTING ENGINEERS
21 Cross Avenue, Midland Park, NJ 07432-1811, 201-444-0753, FAX 201-444-0839

April 28, 2025 – Issued for Bidding and Building Department Filing

PROFESSIONAL ENGINEER

BRIAN W. PASECHNICK, PE
NY License No. 91385

SECTION 21 00 00 - GENERAL FIRE SUPPRESSION REQUIREMENTS

PART 1 - GENERAL

1.1 RELATED DOCUMENTS

A. Drawings and general provisions of the Contract, including General and Supplementary Conditions and Division 01 Specification Sections, apply to this Section.
B. Drawings and general provisions of contract, including General and Supplementary Conditions and Division 1 Specification sections, apply to work specified in this section.

C. Section 23 00 00– Special Requirements for Mechanical and Electrical Work shall apply.

D. Section 23 00 50 - Vibration Isolation and Seismic Restraints for HVAC, Fire Protection, Electrical and Plumbing shall apply.

1.2 SUMMARY

A. This Section includes the following:
1. Piping materials and installation instructions common to most piping systems.
2. Mechanical sleeve seals.
3. Sleeves.
4. Escutcheons.
5. Grout.
6. Fire-suppression demolition.
7. Concrete bases.
8. Supports and anchorages.
9. New equipment/component bar coding (see 3.7 near end of this section).

1.3 DEFINITIONS

A. Finished Spaces: Spaces other than mechanical and electrical equipment rooms, furred spaces, pipe chases, unheated spaces immediately below roof, spaces above ceilings, unexcavated spaces, crawlspaces, and tunnels.
B. Exposed, Interior Installations: Exposed to view indoors. Examples include finished occupied spaces and mechanical equipment rooms.
C. Exposed, Exterior Installations: Exposed to view outdoors or subject to outdoor ambient temperatures and weather conditions. Examples include rooftop locations.
D. Concealed, Interior Installations: Concealed from view and protected from physical contact by building occupants. Examples include above ceilings and in chases.
E. Concealed, Exterior Installations: Concealed from view and protected from weather conditions and physical contact by building occupants but subject to outdoor ambient temperatures. Examples include installations within unheated shelters.

1.4 SUBMITTALS

A. Welding certificates.
B. Qualifications for installing and maintenance technicians.

C. In Microsoft Excel, a complete sprinkler device report is required, which covers all sprinkler devices by location, per building served. Report to include all system components identified on the risers, total number of sprinklers per floor, flow switches, tampers, FDC's, inspectors test valves, standpipes, backflow preventers, gauges, hose connections and cabinets, and all other similar and required components. The University can provide a sample of the report when requested.

1.5 QUALITY ASSURANCE AND COORDINATION

A. Steel Support Welding: Qualify processes and operators according to AWS D1.1, "Structural Welding Code--Steel."
B. Steel Pipe Welding: Qualify processes and operators according to ASME Boiler and Pressure Vessel Code: Section IX, "Welding and Brazing Qualifications."
   1. Comply with provisions in ASME B31 Series, "Code for Pressure Piping."
   2. Certify that each welder has passed AWS qualification tests for welding processes involved and that certification is current.
C. Electrical Characteristics for Fire-Suppression Equipment: Equipment of higher electrical characteristics may be furnished provided such proposed equipment is approved in writing and connecting electrical services, circuit breakers, and conduit sizes are appropriately modified. If minimum energy ratings or efficiencies are specified, equipment shall comply with requirements.
D. Comply with applicable codes, standards, and requirements of authorities having jurisdiction.
E. Comply with the New Jersey Building Code and Fire Code, and required references, and required references, and with all other requirements of the local Authority Having Jurisdiction (AHJ). In cases where these requirements deviate from the project contract documents, the most stringent shall govern.
F. System Designs: Shall be provided by a properly qualified and NJ licensed Professional Engineer.
G. All system designs, materials, and installations shall meet applicable FM Global requirements.

1.6 SPECIAL WARRANTIES

A. 5 year service warranty from date of project handover to Owner at beneficial occupancy, see Division 01 for more information. These warranties shall also include a 4 hour response to emergency service calls, parts and labor, and maintenance per all applicable NFPA codes.

PART 2 - PRODUCTS

2.1 EQUIPMENT AND MATERIALS:

A. All equipment and materials shall be furnished in strict accordance with the instructions of the manufacturer of the equipment named, according to NFPA and FM Global requirements and standards, and according to Specification requirements. Bids shall be based upon one of the manufacturers specified.
B. Where multiple manufacturers are named the drawings and specifications are based on the requirements and layouts for the equipment of the first named manufacturer, any changes required by the use of other named manufacturers such as revisions to

foundations, bases, piping, controls, wiring, openings, and appurtenances shall be made by the Contractor at no additional cost to the University.

C. As system flows, tampers, etc need to be connected to facility fire alarm system (by the FA contractor) the flows, tampers, and other similar devices are to be furnished with two sets of contacts so that the fire alarm contractor can tie to one set and the Division 25 contractor can tie to the other set.

2.2 PIPE TUBE, AND FITTINGS

A. Refer to individual Division 21 Sections for pipe, tube, and fitting materials and joining methods. No cast fittings allowed for new piping, all must be malleable iron or steel (for couplings), as applicable with specific piping system.
B. Pipe Threads: ASME B1.20.1 for factory-threaded pipe and pipe fittings.

2.3 JOINING MATERIALS

A. Refer to individual Division 21 Sections for special joining materials not listed below.
B. Pipe-Flange Gasket Materials: ASME B16.21, nonmetallic, flat, asbestos-free, 1/8-inch maximum thickness unless thickness or specific material is indicated.
C. Solder Filler Metals: ASTM B 32, lead-free alloys. Include water-flushable flux according to ASTM B 813.
D. Brazing Filler Metals: AWS A5.8, BCuP Series or BAg1, unless otherwise indicated.
E. Welding Filler Metals: Comply with AWS D10.12.

2.4 MECHANICAL SLEEVE SEALS

A. Description: Modular sealing element unit, designed for field assembly, to fill annular space between pipe and sleeve.
B. Sealing Elements: EPDM interlocking links shaped to fit surface of pipe. Include type and number required for pipe material and size of pipe.
C. Pressure Plates: Stainless steel. Include two for each sealing element.
D. Connecting Bolts and Nuts: Stainless steel of length required to secure pressure plates to sealing elements. Include one for each sealing element.

2.5 SLEEVES

A. Galvanized-Steel Sheet: 0.0239-inch minimum thickness; round tube closed with welded longitudinal joint.
B. Steel Pipe: ASTM A 53, Type E, Grade B, Schedule 40, galvanized, plain ends.
C. Cast Iron: Cast or fabricated "wall pipe" equivalent to ductile-iron pressure pipe, with plain ends and integral waterstop, unless otherwise indicated.
D. Stack Sleeve Fittings: Manufactured, cast-iron sleeve with integral clamping flange. Include clamping ring and bolts and nuts for membrane flashing.
   1. Underdeck Clamp: Clamping ring with set screws.

2.6 ESCUTCHEONS

A. Description: Manufactured wall and ceiling escutcheons and floor plates, with an ID to closely fit around pipe, and tube, that completely covers opening.
B. One-Piece, Deep-Pattern Type: Deep-drawn, box-shaped brass with polished chrome-plated finish.
C. One-Piece, Cast-Brass Type: With set screw.
   1. Finish: Polished chrome-plated.
D. Split-Casting, Cast-Brass Type: With concealed hinge and set screw.
   1. Finish: Polished chrome-plated.

2.7 GROUT

A. Description: ASTM C 1107, Grade B, non-shrink and nonmetallic, dry hydraulic-cement grout.
   1. Characteristics: Post-hardening, volume-adjusting, non-staining, noncorrosive, nongaseous, and recommended for interior and exterior applications.
   2. Design Mix: 5000-psi, 28-day compressive strength.
   3. Packaging: Premixed and factory packaged.

PART 3 - EXECUTION

3.1 PIPING SYSTEMS - COMMON REQUIREMENTS

A. Install piping according to the following requirements and Division 21 Sections specifying specific systems.
B. Drawing plans, schematics, and diagrams indicate general location and arrangement of piping systems. Indicated locations and arrangements were used to size pipe and calculate friction loss, expansion, pump sizing, and other design considerations. Install piping as indicated unless deviations to layout are approved on Coordination Drawings.
C. Install piping in concealed locations, unless otherwise indicated and except in equipment rooms and service areas.
D. Install piping indicated to be exposed and piping in equipment rooms and service areas at right angles or parallel to building walls. Diagonal runs are prohibited unless specifically indicated otherwise.
E. Install piping above accessible ceilings to allow sufficient space for ceiling panel removal.
F. Install piping to permit valve servicing.
G. Install piping at indicated slopes.
H. Install piping free of sags and bends.
I. Install fittings for changes in direction and branch connections.
J. Select system components with pressure rating equal to or greater than system operating pressure in accordance with applicable NFPA document.
K. Install escutcheons for penetrations of walls, ceilings, and floors.
L. Install sleeves for pipes passing through concrete and masonry walls, gypsum-board partitions, and concrete floor and roof slabs.
M. Aboveground, Exterior-Wall Pipe Penetrations: Seal penetrations using sleeves and mechanical sleeve seals. Select sleeve size to allow for 1-inch annular clear space between pipe and sleeve for installing mechanical sleeve seals.
   1. Install steel pipe for sleeves smaller than 6 inches in diameter.
   2. Install cast-iron "wall pipes" for sleeves 6 inches and larger in diameter.
   3. Mechanical Sleeve Seal Installation: Select type and number of sealing elements required for pipe material and size. Position pipe in center of sleeve. Assemble mechanical sleeve seals and install in annular space between pipe and sleeve.

Tighten bolts against pressure plates that cause sealing elements to expand and make watertight seal.

N. Underground, Exterior-Wall Pipe Penetrations: Install cast-iron "wall pipes" for sleeves. Seal pipe penetrations using mechanical sleeve seals. Select sleeve size to allow for 1-inch annular clear space between pipe and sleeve for installing mechanical sleeve seals.
   1. Mechanical Sleeve Seal Installation: Select type and number of sealing elements required for pipe material and size. Position pipe in center of sleeve. Assemble mechanical sleeve seals and install in annular space between pipe and sleeve. Tighten bolts against pressure plates that cause sealing elements to expand and make watertight seal.

O. Fire-Barrier Penetrations: Maintain indicated fire rating of walls, partitions, ceilings, and floors at pipe penetrations. Seal pipe penetrations with firestop materials. Refer to Division 07 Section "Penetration Firestopping" for materials.

P. Verify final equipment locations for roughing-in.

Q. Refer to equipment specifications in other Sections of these Specifications for roughing-in requirements.

R. For all systems utilizing water from a campus main, all connections to same shall include a properly rated check valve and isolation valve, in addition to any required backflow preventers, etc. S. For water based suppression systems, for multi-story buildings, each branch off a riser per floor, is to have a properly rated check valve.

3.2 PIPING JOINT CONSTRUCTION

A. Join pipe and fittings according to the following requirements and Division 21 Sections specifying specific systems.

B. Ream ends of pipes and tubes and remove burrs. Bevel plain ends of steel pipe.

C. Remove scale, slag, dirt, and debris from inside and outside of pipe and fittings before assembly.

D. Soldered Joints: Apply ASTM B 813, water-flushable flux, unless otherwise indicated, to tube ends. Construct joints according to ASTM B 828 or CDA's "Copper Tube Handbook," using lead-free solder alloy complying with ASTM B 32.

E. Brazed Joints: Construct joints according to AWS's "Brazing Handbook," "Pipe and Tube" Chapter, using copper-phosphorus brazing filler metal complying with AWS A5.8.

F. Threaded Joints: Thread pipe with tapered pipe threads according to ASME B1.20.1. Cut threads full and clean using sharp dies. Ream threaded pipe ends to remove burrs and restore full ID. Join pipe fittings and valves as follows:
   1. Apply appropriate tape or thread compound to external pipe threads unless dry seal threading is specified.
   2. Damaged Threads: Do not use pipe or pipe fittings with threads that are corroded or damaged. Do not use pipe sections that have cracked or open welds.

G. Welded Joints: Construct joints according to AWS D10.12, using qualified processes and welding operators according to Part 1 "Quality Assurance" Article.

H. Flanged Joints: Select appropriate gasket material, size, type, and thickness for service application. Install gasket concentrically positioned. Use suitable lubricants on bolt threads.

3.3 CONCRETE BASES

A. Concrete Bases: Anchor equipment to concrete base according to equipment manufacturer's written instructions and according to seismic codes at Project.
   1 Construct concrete bases of dimensions indicated, but not less than 4 inches larger in both directions than supported unit.
   2. Install dowel rods to connect concrete base to concrete floor. Unless otherwise indicated, install dowel rods on 18-inch centers around the full perimeter of the base.
   3. Install epoxy-coated anchor bolts for supported equipment that extend through concrete base, and anchor into structural concrete floor.
   4. Place and secure anchorage devices. Use supported equipment manufacturer's setting drawings, templates, diagrams, instructions, and directions furnished with items to be embedded.
   5. Install anchor bolts to elevations required for proper attachment to supported equipment.
   6. Install anchor bolts according to anchor-bolt manufacturer's written instructions.
   7. Use 3000-psi 28-day compressive-strength concrete and reinforcement as specified in Division 03 Section "Cast-in-Place Concrete"3.5 ERECTION OF METAL SUPPORTS AND ANCHORAGES

B. Refer to Division 05 Section "Metal Fabrications" for structural steel.
C. Cut, fit, and place miscellaneous metal supports accurately in location, alignment, and elevation to support and anchor fire-suppression materials and equipment.
D. Field Welding: Comply with AWS D1.1.

3.4 GROUTING

A. Mix and install grout for fire-suppression equipment base bearing surfaces, pump and other equipment base plates, and anchors.
B. Clean surfaces that will come into contact with grout.
C. Provide forms as required for placement of grout.
D. Avoid air entrapment during placement of grout.
E. Place grout, completely filling equipment bases.
F. Place grout on concrete bases and provide smooth bearing surface for equipment.
G. Place grout around anchors.
H. Cure placed grout.

3.5 NEW WORK BAR CODING

A. Coordinate with University, and bar code all new Division 21 equipment and components for them, according to their requirements. Requirements include, but not limited to, being iPad compatible, have the ability to call up maps of the areas on bar code scan, must have safeguards built in to flag missing extinguishers and/or other items, and the devices on the maps need to be color coded based on inspection status.

3.6 SYSTEM TESTING

A. All system testing to meet local jurisdiction and fire fighting authority, applicable NFPA codes and standards (NFPA 10, 101, 2001, 96, and other as applicable), and FM Global requirements. Testing methods (initial installation for acceptance and then weekly, monthly, quarterly, semi-annually, and annually as required) to be included, and tests to

be used are ones that actually flow water (depending on exactly what type of system or component is being tested).

END OF SECTION 21 00 00

SECTION 21 13 14 – AUTOMATIC SPRINKLER SYSTEMS (WET PIPE SYSTEMS)

PART 1 - GENERAL

1.1 RELATED DOCUMENTS

A. Drawings and general provisions of the Contract, including General and Supplementary Conditions and Division 01 Specification Sections, apply to this Section.
B. Section 21 00 00, "General Fire Suppression Requirements."

1.2 SUMMARY

A. Section Includes:
1. Aboveground fire protection pipe, fittings, and specialties inside the building from 1’-0” above finished floor, 1’-0” inside the exterior wall, or connection provided in the domestic water line as shown on the drawings.
2. Fire-protection valves.
3. Fire-department connections.
4. Sprinklers.
5. Hose Cabinets.
6. Alarm devices.
7. Pressure gages.
8. Backflow preventers.

1.3 SYSTEM DESCRIPTIONS

A. Wet-Pipe Sprinkler System: Automatic sprinklers are attached to piping containing water and that is connected to water supply through alarm valve. Water discharges immediately from sprinklers when they are opened. Sprinklers open when heat melts fusible link or destroys frangible device. Hose connections are included if indicated.

1.4 PERFORMANCE REQUIREMENTS

A. Standard-Pressure Piping System Component: Listed for 175-psig minimum working pressure.
B. Delegated Design: Design sprinkler system(s), including comprehensive engineering analysis by a properly licensed and qualified Professional Engineer, using performance requirements and design criteria indicated. Professional Engineer shall seal (stamp) hydraulic calculations and sprinkler system drawings. Professional Engineer shall be registered in the State of New York.
1. The Contractor shall perform a flow test in accordance with NFPA or obtain water design data from the Local Water Department if data is not shown on the drawings.
C. Sprinkler system design shall be approved by the authorities having jurisdiction.
1. Margin of Safety for Available Water Flow and Pressure: 10 percent, including losses through water-service piping, valves, and backflow preventers.
2 Sprinkler Occupancy Hazard Classifications, densities, and head spacing shall be as indicated on the drawings.

1.5 SUBMITTALS

A. Product Data: For each type of product indicated.
B. Shop Drawings: For wet-pipe sprinkler systems. Include plans, elevations, sections, details, and attachments to other work.
   1. Wiring Diagrams: For power, signal, and control wiring.
C. Delegated-Design Submittal: For sprinkler systems indicated to comply with performance requirements and design criteria, including analysis data signed and sealed by the qualified professional engineer responsible for their preparation.
D. Qualification Data: For qualified Installer and Professional Engineer.
E. Approved Sprinkler Piping Drawings: Working plans, prepared according to NFPA 13, that have been approved by authorities having jurisdiction, including hydraulic calculations if applicable.
F. Welding certificates.
G. Field Test Reports and Certificates: Indicate and interpret test results for compliance with performance requirements and as described in NFPA 13. Include "Contractor's Material and Test Certificate for Aboveground Piping."
H. Field quality-control reports.
I. Operation and maintenance data.

1.6 QUALITY ASSURANCE

A. Installer Qualifications:
   1. Installer's responsibilities include designing, fabricating, and installing sprinkler systems and providing professional engineering services needed to assume engineering responsibility. Base calculations on results of fire-hydrant flow test with corrections to the flow obtained per NFPA 291 Part 4.12 System Correction.
      a. Engineering Responsibility: Preparation of working plans, calculations, and field test reports by a properly qualified and licensed Professional Engineer.
B. Welding Qualifications: Qualify procedures and operators according to ASME Boiler and Pressure Vessel Code.
C. Electrical Components, Devices, and Accessories: Listed and labeled as defined in NFPA 70, by a qualified testing agency, and marked for intended location and application.
D. NFPA Standards and Other Requirements: Sprinkler system equipment, specialties, accessories, installation, and testing shall comply with the following:
   1. NFPA 13, "Installation of Sprinkler Systems."
   2. NFPA 14, "Standpipe and Hose Systems."
   3. NFPA 70, "National Electrical Code."
   4. NFPA 72, "National Fire Alarm and Signaling Code."
   5. NFPA 291, "Fire Flow Testing and Marking of Hydrants."
   6. NFPA 1963, "Fire Hose Connections."
   7. Comply with the New Jersey Building Code and Fire Code, and required references, and with all other requirements of the local Authority Having Jurisdiction (AHJ).
E. Comply with FM Global requirements for general installation of systems, prevention and control of internal corrosion in automatic sprinkler systems, installations in any residential occupancies, for deluge, and pre-action valves and accessories, for cross connections, for pressure reducing valves for fire protection service, for system inspections, testing and maintenance, for pipe friction losses for hydraulics of fire protection systems, for fire

protection pumps, for fixed water spray systems for fire protection, for water mist systems, for installation/maintenance of fire service mains, for standpipes and hose systems, and for fire protection water demand for non-storage sprinkled properties.

F. WARRANTIES

1. 5 years, see Section 21 00 00.

PART 2 - PRODUCTS

2.1 All materials and components shall meet local jurisdiction, NFPA, and FM Global requirements.

2.2 PIPING MATERIALS

A. Comply with requirements in "Piping Schedule" Article at the end of this Section for applications of pipe, tube, and fitting materials, and for joining methods for specific services, service locations, and pipe sizes.

2.3 STEEL PIPE AND FITTINGS

A. Standard Weight, Black-Steel Pipe: ASTM A 53 Schedule 40. Pipe ends may be factory or field formed to match joining method.
B. Schedule 30, Black-Steel Pipe: ASTM A 135; ASTM A 795/A 795M,; or ASME B36.10M, wrought steel; with wall thickness not less than Schedule 30 and not more than Schedule 40. Pipe ends may be factory or field formed to match joining method.
C. Thinwall Black-Steel Pipe: ASTM A 135 or ASTM A 795/A 795M, threadable, with wall thickness less than Schedule 30 and equal to or greater than Schedule 10. Pipe ends may be factory or field formed to match joining method.
D. Black Steel Pipe Nipples: ASTM A 733, made of ASTM A 53/A 53M, standard-weight, seamless steel pipe with threaded ends.
E. Uncoated, Steel Couplings: ASTM A 865, threaded.
F. Uncoated, Gray-Iron Threaded Fittings: ASME B16.4, Class 125, standard pattern.
G. Malleable- or Ductile-Iron Unions: UL 860.
H. Cast-Iron Flanges (must be approved by the University): ASME 16.1, Class 125.
I. Steel Flanges and Flanged Fittings: ASME B16.5, Class 150.
J. Steel Welding Fittings: ASTM A 234/A 234M and ASME B16.9.
K. Grooved-Joint, Steel-Pipe Appurtenances:
1. Manufacturers: Subject to compliance with requirements, provide products by one of the following:
a. Corcoran Piping System Co.
b. Tyco Fire & Building Products LP.
c. Victaulic Company.
2. Pressure Rating: 175 psig minimum.
3. Grooved-End Fittings for Steel Piping: ASTM A 47/A 47M, malleable-iron casting or ASTM A 536, ductile-iron casting; with dimensions matching steel pipe.
4. Grooved-End-Pipe Couplings for Steel Piping: AWWA C606 and UL 213, rigid pattern, unless otherwise indicated, for steel-pipe dimensions. Include ferrous housing sections, EPDM-rubber gasket, and bolts and nuts.

2.4 PIPING JOINING MATERIALS
A. Pipe-Flange Gasket Materials: AWWA C110, rubber, flat face, 1/8 inch thick.

1. Full-face gaskets.

B. Metal, Pipe-Flange Bolts and Nuts: ASME B18.2.1, carbon steel unless otherwise indicated.

C. Welding Filler Metals: Comply with AWS D10.12M/D10.12 for welding materials appropriate for wall thickness and chemical analysis of steel pipe being welded.

2.5 LISTED FIRE-PROTECTION VALVES

A. General Requirements:
1. Valves shall be UL listed or FM approved, and meet FM Global requirements.
2. Minimum Pressure Rating: 175 psig.

B. Check Valves:
1. Standard: UL 312.
2. Pressure Rating: 250 psig minimum.
3. Type: Swing check.
4. Body Material: Cast iron.
5. End Connections: Flanged or grooved.

C. Bronze OS&Y Gate Valves:
1. Standard: UL 262.
2. Pressure Rating: 175 psig.
3. Body Material: Bronze.
4. End Connections: Threaded.

D. Iron OS&Y Gate Valves:
1. Standard: UL 262.
2. Pressure Rating: 250 psig minimum.
3. Body Material: Cast or ductile iron.
4. End Connections: Flanged or grooved.

E. Ball Valves 2” and smaller:
1. Standard UL 1091.
2. Pressure Rating: 175 psig minimum.
3. Body Material: Bronze.
4. End Connections: Threaded.

F. Indicating-Type Butterfly Valves:
1. Standard: UL 1091.
2. Pressure Rating: 175 psig minimum.
3. Valve Type: Butterfly.
4. Body Material: Cast or ductile iron.
5. End Connections: Flanged, grooved, or wafer.
6. Valve Operation: Integral electrical, 115-V ac, prewired, single-circuit, supervisory switch indicating device.

2.6 TRIM AND DRAIN VALVES

A. General Requirements:
1. Standard: UL's "Fire Protection Equipment Directory" listing or "Approval Guide," published by FM Global, listing.
2. Minimum Pressure Rating: 175 psig.

2.7 SPECIALTY VALVES

A. General Requirements:
1. Standard: UL's "Fire Protection Equipment Directory" listing or "Approval Guide," published by FM Global, listing.
2. Minimum Pressure Rating: 175 psig.
3. Body Material: Cast or ductile iron.
4. Size: Same as connected piping.
5. End Connections: Flanged or grooved.

B. Riser Check Valves with Trim:
1. Manufacturers: Subject to compliance with requirements, provide products by one of the following:
a. Reliable Automatic Sprinkler Co., Inc.
b. Victaulic Company.
c. Viking Corporation.
2. Standard: UL 193.
3. Design: For vertical installation.
4. Trim Package: All necessary nipples and fittings, main drain valve, and gauges.

C. Automatic (Ball Drip) Drain Valves:
1. Standard: UL 1726.
2. Pressure Rating: 175 psig minimum.
3. Type: Automatic draining, ball check.
4. Size: NPS 3/4.
5. End Connections: Threaded.

28. FIRE-DEPARTMENT CONNECTIONS

A. Flush-Type, Fire-Department Connection:
1. Standard: UL 405.
2. Type: Flush, for wall mounting.
3. Pressure Rating: 175 psig minimum.
4. Body Material: Corrosion-resistant metal.
5. Inlets: Brass with threads according to NFPA 1963 and matching local fire-department sizes and threads. Include extension pipe nipples, brass lugged swivel connections, and check devices or clappers.
6. Caps: Brass, lugged type, with gasket and chain.
7. Escutcheon Plate: Rectangular, brass, wall type.
8. Outlet: With pipe threads.
9. Body Style: Horizontal.
10. Number of Inlets: Two.
11. Outlet Location: Back.
12. Escutcheon Plate Marking: Similar to " AUTO SPKR", and if dual service, mark the 2nd service as well per University requirements.
13. Finish: Polished chrome plated.
14. Outlet Size: 4”.
15. For the Evanston campus, provide a weatherproof, visual fire alarm signal device above the connection along with a weatherproof box/cabinet/panel for a future audible device.

2.9 SPRINKLER SPECIALTY PIPE FITTINGS

A. Branch Outlet Fittings:
   1. Standard: UL 213.
   2. Pressure Rating: 175 psig minimum.
   3. Body Material: Ductile-iron housing with EPDM seals and bolts and nuts.
   4. Type: Mechanical-T and -cross fittings.
   5. Configurations: Snap-on and strapless, ductile-iron housing with branch outlets.
   6. Size: Of dimension to fit onto sprinkler main and with outlet connections as required to match connected branch piping.
   7. Branch Outlets: Grooved, plain-end pipe, or threaded.

B. Flow Detection and Test Assemblies:
   1. Standard: UL's "Fire Protection Equipment Directory" listing or "Approval Guide," published by FM Global, listing.
   2. Pressure Rating: 175 psig minimum.
   3. Body Material: Cast- or ductile-iron housing with orifice, sight glass, and integral test valve.
   4. Size: Same as connected piping.
   5. Inlet and Outlet: Threaded.

C. Zone/Floor Control Module:
   1. UL listed, FM approved complete with flow switch, pressure gage, and ball valve.

D. Branch Line Testers:
   1. Standard: UL 199.
   2. Pressure Rating: 175 psig minimum.
   3. Body Material: Brass.
   4. Size: Same as connected piping.
   5. Inlet: Threaded.
   6. Drain Outlet: Threaded and capped.
   7. Branch Outlet: Threaded, for sprinkler.

E. Sprinkler Inspector's Test Fittings:
   1. Standard: UL's "Fire Protection Equipment Directory" listing or "Approval Guide," published by FM Global, listing.
   2. Pressure Rating: 175 psig minimum.
   3. Body Material: Cast- or ductile-iron housing with sight glass.
   4. Size: Same as connected piping.
   5. Inlet and Outlet: Threaded.

F. Adjustable Drop Nipples:
   1. Standard: UL 1474.
   2. Pressure Rating: 250 psig minimum.
   3. Body Material: Steel pipe with EPDM-rubber O-ring seals.
   4. Size: Same as connected piping.
   5. Length: Adjustable.
   6. Inlet and Outlet: Threaded.

G. Braided Flexible, Sprinkler Hose Fittings:
   1. Standard: UL 1474.
   2. Type: Flexible hose for connection to sprinkler, and with bracket for connection to ceiling grid.
   3. Pressure Rating: 175 psig minimum.
   4. FM approved.
   5. Size: Same as connected piping, for sprinkler.

2.10 SPRINKLERS

A. Manufacturers: Subject to compliance with requirements, provide products by one of the following:
   1. Globe Fire Sprinkler Corporation.
   2. Reliable Automatic Sprinkler Co., Inc.
   3. Viking Corporation.
   4. Victaulic Company.

B. General Requirements:
   1. Standard: UL's "Fire Protection Equipment Directory" listing or "Approval Guide," published by FM Global, listing.
   2. Pressure Rating for Automatic Sprinklers: 175 psig minimum.
   3. Sprinklers shall be used in accordance with their listed coverage limitations.
   4. Sprinkler temperature classification shall be as required**.**
   5. Sprinklers in high heat areas including attic spaces or in close proximity to unit heaters shall have temperature classification in accordance with NFPA 13.

C. Sprinkler Types:
   1. Concealed Sprinkler: Concealed sprinkler shall be chrome-plated quick-response type and shall have a nominal 1/2 inch or 17/32 inch orifice. Cover to be color selected by Architect.
   2. Recessed Sprinkler: Recessed sprinkler shall be chrome-plated quick-response type and shall have a nominal 1/2 inch or 17/32 inch orifice.
   3. Upright Sprinkler: Upright sprinkler shall be chrome-plated quick-response type and shall have a nominal 1/2 inch or 17/32 inch orifice.
   4. Sidewall Sprinkler: Sidewall sprinkler shall have a nominal 1/2 inch orifice. Sidewall sprinkler shall have a polished chrome finish. Sidewall sprinkler shall be the quick-response type.
   5. Intermediate Level Rack Sprinkler: Intermediate level rack sprinkler shall be of the upright or pendent type with nominal 13 mm 1/2 inch orifice and minimum "K" factor of 5.5. The sprinkler shall be equipped with a deflector plate to shield the fusible element from water discharged above it.

D. Sprinkler Escutcheons: Materials, types, and finishes for the following sprinkler mounting applications. Escutcheons for concealed, flush, and recessed-type sprinklers are specified with sprinklers.
   1. Sidewall Mounting: Chrome-plated steel, one piece, flat.

E. Sprinkler Guards
   1. Guards shall be a steel wire cage designed to encase the sprinkler and protect it from mechanical damage. Guards shall be provided on sprinklers in sports activity areas, and as otherwise noted on drawings.

2.11 ALARM DEVICES

A. Alarm-device types shall match piping and equipment connections.

B. Water-Flow Indicators:
   1. Standard: UL 346.
   2. Water-Flow Detector: Electrically supervised.
   3. Components: Two single-pole, double-throw circuit switches for isolated alarm and auxiliary contacts, 7 A, 125-V ac and 0.25 A, 24-V dc; complete with factory-set, field-adjustable retard element to prevent false signals and tamperproof cover that sends signal if removed.

4. Type: Paddle operated.
5. Pressure Rating: 250 psig.
6. Design Installation: Horizontal or vertical.

C. Valve Supervisory Switches:
1. Standard: UL 346.
2. Type: Electrically supervised.
3. Components: Single-pole, double-throw switch with normally closed contacts.
4. Design: Signals that controlled valve is in other than fully open position. Also, external tamper switches or external wired tamper switches are required.

2.12 PRESSURE GAGES

A. Standard: UL 393.
B. Dial Size: 3-1/2- to 4-1/2-inch (90- to 115-mm) diameter.
C. Pressure Gage Range: 0 to 300 psig (0 to 2070 kPa).
D. Water System Piping Gage: Include "WATER" label on dial face, as directed by the University/AHJ.

2.13 BACKFLOW PREVENTERS

A. Basis-of-Design Product: Subject to compliance with requirements, provide a Conbraco RPDA 4A reduced pressure detector assembly backflow preventer. The assembly shall consist of two independent tri-link check valves within a single housing, sleeve access port, four test cocks and two drip tight shut-off valves. Tri-link checks shall be removable and serviceable, without the use of special tools.
B. The bypass assembly shall consist of a meter, which registers in either gallon or cubic measurement, a double check backflow assembly and required test cocks
C. The housing shall be constructed of 304 Schedule 40 stainless steel pipe with grooved end connections. Tri-link checks shall have chloramine resistant silicone discs and in operation shall produce drip tight closure against reverse flow caused by backpressure or back-siphonage.
D. UL/FM grooved gear operated butterfly valves with tamper switches.
E. Refer to Division 21 and other site related divisions for other requirements for when connection to domestic water mains or services.
F. Devices shall be located in a Hot Box located on site. Coordinate requirements with water company.

2.14 SPECIAL COMPONENT ELECTRICAL CONTACT REQUIREMENTS

A. All devices/components required to be monitored electrically for flow, tamper, etc, shall have two sets of contacts, one for the fire alarm system connection and one for the Division 25 system connection.

PART 3 – EXECUTION

3.1 WATER-SUPPLY CONNECTIONS
A. If applicable, connect sprinkler piping to building's interior water-distribution piping. Comply with requirements for interior piping in Division 22 Section "Domestic Water Distribution System."

B. Install shutoff valve, backflow preventer, pressure gage, drain, and other accessories indicated at connection to water-distribution piping.

3.2 PIPING INSTALLATION

A. Locations and Arrangements: Drawing plans, schematics, and diagrams indicate general location and arrangement of piping. Install piping as indicated, as far as practical.
   1. Deviations from approved working plans for piping require written approval from authorities having jurisdiction. File written approval with Architect before deviating from approved working plans.
B. Piping Standard: Comply with requirements for installation of sprinkler piping in NFPA 13.
C. Use listed fittings to make changes in direction, branch takeoffs from mains, and reductions in pipe sizes.
D. Install unions adjacent to each valve in pipes NPS 2 and smaller.
E. Install flanges, flange adapters, or couplings for grooved-end piping on valves, apparatus, and equipment having NPS 2-1/2 and larger end connections.
F. Install "Inspector's Test Connections" in sprinkler system piping, complete with shutoff valve, and sized and located according to NFPA 13.
G. Install sprinkler piping with drains for complete system drainage.
H. Install sprinkler control valves, test assemblies, and drain risers adjacent to standpipes when sprinkler piping is connected to standpipes.
I. Install automatic (ball drip) drain valve at each check valve for fire-department connection, to drain piping between fire-department connection and check valve. Install drain piping to and spill over floor drain or to outside building. J. Install alarm devices in piping systems.
K. Install hangers and supports for sprinkler system piping according to NFPA 13. Comply with requirements for hanger materials in NFPA 13.
L. Install pressure gages on riser or feed main, at each sprinkler test connection, and at top of each standpipe. Include pressure gages with connection not less than NPS 1/4 and with soft metal seated globe valve, arranged for draining pipe between gage and valve. Install gages to permit removal, and install where they will not be subject to freezing.
M. Fill sprinkler system piping with water.
N. For multi-story buildings, refer to Section 21 0000 for floor branch check valve requirements.

3.3 JOINT CONSTRUCTION

A. Install couplings, flanges, flanged fittings, unions, nipples, and transition and special fittings that have finish and pressure ratings same as or higher than system's pressure rating for aboveground applications unless otherwise indicated.
B. Ream ends of pipes and tubes and remove burrs. Bevel plain ends of steel pipe.
C. Remove scale, slag, dirt, and debris from inside and outside of pipes, tubes, and fittings before assembly.
D. Flanged Joints: Select appropriate gasket material in size, type, and thickness suitable for water service. Join flanges with gasket and bolts according to ASME B31.9.
E. Threaded Joints: Thread pipe with tapered pipe threads according to ASME B1.20.1. Cut threads full and clean using sharp dies. Ream threaded pipe ends to remove burrs and restore full ID. Join pipe fittings and valves as follows:

1. Apply appropriate tape or thread compound to external pipe threads.
2. Damaged Threads: Do not use pipe or pipe fittings with threads that are corroded or damaged.

F. Steel-Piping, Pressure-Sealed Joints: Join lightwall steel pipe and steel pressure-seal fittings with tools recommended by fitting manufacturer.

G. Welded Joints: Construct joints according to AWS D10.12M/D10.12, using qualified processes and welding operators according to "Quality Assurance" Article.
1. Shop weld pipe joints where welded piping is indicated. Do not use welded joints for galvanized-steel pipe.

H. Steel-Piping, Roll-Grooved Joints: Roll rounded-edge groove in end of pipe according to AWWA C606. Assemble coupling with housing, gasket, lubricant, and bolts. Join steel pipe and grooved-end fittings according to AWWA C606 for steel-pipe grooved joints.

I. Dissimilar-Material Piping Joints: Make joints using adapters compatible with materials of both piping systems.

3.4 VALVE AND SPECIALTIES INSTALLATION

A. Install listed fire-protection valves, trim and drain valves, specialty valves and trim, controls, and specialties according to NFPA 13 and authorities having jurisdiction.

B. Install listed fire-protection shutoff valves supervised open, located to control sources of water supply except from fire-department connections. Install permanent identification signs indicating portion of system controlled by each valve.

C. Install backflow preventers at connection to potable-water-supply source.

D. Specialty Valves and Switch Requirements:
1. General Requirements: Install in vertical position for proper direction of flow, in main supply to system.

2. Alarm Valves: Include bypass check valve and retarding chamber drain-line connection.
3. Valve supervisory switches shall be provided for each point where the water supply to the system or parts of the system can be shut off. Valves grouped at a common location can be combined into the same zone to a maximum of 5. In no case shall valves be concealed.

E. All devices/components required to be monitored electrically for flow, tamper, etc, shall have two sets of contacts, one for the fire alarm system connection and one for the Division 25 system connection.

3.5 SPRINKLER INSTALLATION AND APPLICATION

A. Install sprinklers in suspended ceilings in center of narrow dimension of acoustical ceiling panels or where indicated on Architectural Reflected Ceiling Plans, unless the sprinklers can be otherwise be aesthetically located, but off-center locations must be approved ahead of time individually by the University/Architect.

B. Quick response sprinklers are required in offices, classrooms, hallways, assembly areas, atriums, sleeping rooms, dining rooms, and most lab areas. Ordinary response sprinklers shall be used in storage areas, mechanical rooms, janitor closets, and areas where special coated sprinklers are required. Temperature ratings shall be the maximum expected ceiling temperatures.

C. Install sprinklers into flexible, sprinkler hose fittings and install hose into bracket on ceiling grid.

3.6 FIRE-DEPARTMENT CONNECTION INSTALLATION

A. Install wall-type, fire-department connection.
B. Install automatic (ball drip) drain valve at each check valve for fire-department connection.

3.7 ESCUTCHEON INSTALLATION

A. Install escutcheons for penetrations of walls, ceilings, and floors.
B. Escutcheons for New Piping:
1. Piping with Fitting or Sleeve Protruding from Wall: One piece, deep pattern.
2. Bare Piping at Wall and Floor Penetrations in Finished Spaces: One piece, cast brass with polished chrome-plated finish.
3. Bare Piping at Ceiling Penetrations in Finished Spaces: One piece, cast brass with polished chrome-plated finish.
4. Bare Piping in Unfinished Service Spaces: One piece, cast brass with polished chrome-plated finish.
5. Bare Piping in Equipment Rooms: One piece, cast brass.
6. Bare Piping at Floor Penetrations in Equipment Rooms: One-piece floor plate.

3.8 SLEEVE INSTALLATION

A. General Requirements: Install sleeves for pipes and tubes passing through penetrations in floors, partitions, roofs, and walls.
B. Sleeves are not required for core-drilled holes.
C. Permanent sleeves are not required for holes formed by removable PE sleeves.
D. Cut sleeves to length for mounting flush with both surfaces unless otherwise indicated.
E. Install sleeves in new partitions, slabs, and walls as they are built.
F. For interior wall penetrations, seal annular space between sleeve and pipe or pipe insulation using joint sealants appropriate for size, depth, and location of joint. Comply with requirements for joint sealants in Division 07 Section "Joint Sealants."
G. For exterior wall penetrations above grade, seal annular space between sleeve and pipe using joint sealants appropriate for size, depth, and location of joint. Comply with requirements for joint sealants in Division 07 Section "Joint Sealants."
H. For exterior wall penetrations below grade, seal annular space between sleeve and pipe using sleeve seals.
I. Seal space outside of sleeves in concrete slabs and walls with grout.
J. Install sleeves that are large enough to provide 1/4-inch annular clear space between sleeve and pipe or pipe insulation unless otherwise indicated.
K. Install sleeve materials according to the following applications:
1. Sleeves for Piping Passing through Concrete Floor Slabs: Galvanized-steel pipe.
2. Sleeves for Piping Passing through Concrete Floor Slabs of Mechanical Equipment Areas or Other Wet Areas: Galvanized-steel pipe.
a. Extend sleeves 2 inches above finished floor level.
b. For pipes penetrating floors with membrane waterproofing, extend cast-iron sleeve fittings below floor slab as required to secure clamping ring if ring is specified. Secure flashing between clamping flanges. Install section of cast-iron soil pipe to extend sleeve to 2 inches above finished floor level. Comply with requirements for flashing in Division 07 Section "Sheet Metal Flashing and Trim."
3. Sleeves for Piping Passing through Gypsum-Board Partitions:

a. Galvanized-steel-sheet sleeves for pipes NPS 6 (DN 150) and larger.

4. Sleeves for Piping Passing through Exterior Concrete Walls:
   a. Galvanized-steel-pipe sleeves for pipes smaller than NPS 6.
   b. Cast-iron wall-pipe sleeves for pipes NPS 6 and larger.
   c. Install sleeves that are large enough to provide 1-inch annular clear space between sleeve and pipe or pipe insulation when sleeve seals are used.

5. Sleeves for Piping Passing through Interior Concrete Walls:
   a. Galvanized-steel-pipe sleeves for pipes smaller than NPS 6.
   b. Galvanized-steel-sheet sleeves for pipes NPS 6 and larger.

L. Fire-Barrier Penetrations: Maintain indicated fire rating of walls, partitions, ceilings, and floors at pipe penetrations. Seal pipe penetrations with firestop materials. Comply with requirements for firestop materials and installations in Division 07 Section "Penetration Firestopping."

3.9 SLEEVE SEAL INSTALLATION

A. Install sleeve seals in sleeves in exterior concrete walls at water-service piping entries into building.

B. Select type and number of sealing elements required for pipe material and size. Position pipe in center of sleeve. Assemble sleeve seal components and install in annular space between pipe and sleeve. Tighten bolts against pressure plates that cause sealing elements to expand and make watertight seal.

3.10 IDENTIFICATION

A. Install labeling and pipe markers on equipment and piping according to requirements in NFPA 13.

B. Identify system components, wiring, cabling, and terminals. Comply with requirements for identification specified in Division 26 Section covering identification for electrical systems.

3.11 FIELD QUALITY CONTROL

A. Perform tests and inspections.

B. Tests and Inspections:
   1. Leak Test: After installation, charge systems and test for leaks. Repair leaks and retest until no leaks exist.
   2. Test and adjust controls and safeties. Replace damaged and malfunctioning controls and equipment.
   3. Flush, test, and inspect sprinkler systems according to NFPA 13, "Systems Acceptance" Chapter, and to FM global requirements.
   4. Energize circuits to electrical equipment and devices.
   5. Coordinate with fire-alarm tests. Operate as required.
   6. Verify that equipment hose threads are same as local fire-department equipment.

C. Sprinkler piping system will be considered defective if it does not pass tests and inspections.

D. Prepare test and inspection reports.

3.12 CLEANING

A. Clean dirt and debris from sprinklers.
B. Remove and replace sprinklers with paint other than factory finish.

3.13 PIPING SCHEDULE

A. Piping between Fire-Department Connections and Check Valves: Galvanized, standard-weight steel pipe with grooved ends; grooved-end fittings; grooved-end-pipe couplings; and grooved joints.
B. Sprinkler specialty fittings may be used, downstream of control valves, instead of specified fittings.
C. Wet-pipe sprinkler system, NPS 2 and smaller, shall be one of the following:
   1. Standard-weight or Schedule 30, black-steel pipe with threaded ends; uncoated, gray-iron threaded fittings; and threaded joints.
   2. Standard-weight or Schedule 30, black-steel pipe with cut- or roll-grooved ends; uncoated, grooved-end fittings for steel piping; grooved-end-pipe couplings for steel piping; and grooved joints.
D. Standard-pressure, wet-pipe sprinkler system, NPS 2-1/2 to NPS 6, shall be one of the following:
   1. Standard-weight or Schedule 30, black-steel pipe with threaded ends; uncoated, gray-iron threaded fittings; and threaded joints.
   2. Standard-weight or Schedule 30, black-steel pipe with cut- or roll-grooved ends; uncoated, grooved-end fittings for steel piping; grooved-end-pipe couplings for steel piping; and grooved joints.
   3. Thinwall black-steel pipe with roll-grooved ends; uncoated, grooved-end fittings for steel piping; grooved-end-pipe couplings for steel piping; and grooved joints.

3.14 SPRINKLER SCHEDULE

A. Use sprinkler types in subparagraphs below for the following applications:
   1. Rooms without Ceilings: Upright sprinklers.
   2. Rooms with Suspended Ceilings: Concealed sprinklers
   3. Wall Mounting: Sidewall sprinklers.
   4. Spaces Subject to Freezing: dry sprinklers
B. Provide sprinkler types in subparagraphs below with finishes indicated.
   1. Concealed Sprinklers: Rough brass, with factory-painted white cover plate.
   2. Recessed Sprinklers: Bright chrome, with bright chrome escutcheon.
   3. Upright and Sidewall Sprinklers: Chrome plated in finished spaces exposed to view; rough bronze in unfinished spaces not exposed to view; wax coated where exposed to acids, chemicals, or other corrosive fumes.

END OF SECTION 21 13 14

SECTION 21 22 00 – CLEAN AGENT FIRE SUPPRESSION SYSTEMS

PART 1 - GENERAL

1.1 SCOPE:

This specification outlines the requirements for a “Total Flood” Clean Agent Fire Suppression System utilizing FK-5-1-12 as the fire extinguishing agent and with an SHP™ PRO™ detection and control system. The work described in this specification includes all engineering, labor, materials, equipment, and services necessary to complete and test the suppression and detection systems.

1.2 APPLICABLE STANDARDS AND PUBLICATIONS:

The design, equipment, installation, testing, and maintenance of the clean agent System shall be in compliance and accordance with the applicable requirements set forth in the latest edition of the following codes, standards, and third-party approval agencies:

A. NFPA No. 2001 - Clean Agent Fire Extinguishing Systems

B. NFPA No. 70 - National Electrical Code

C. NFPA No. 72 - National Fire Alarm Code

D. FM Approvals

E. Underwriters Laboratory

F. Requirements of the Authority Having Jurisdiction (AHJ)

The standards listed and all other applicable codes and standards shall be used as "minimum" design standards. Also to be considered are the requirements of the "Authority Having Jurisdiction" and good engineering practices.

1.3. REQUIREMENTS**:**

The Clean Agent Fire Suppression Systems installation shall be made in accordance with the drawings, specifications, and applicable standards. Should a conflict occur between the drawings and specifications, the specifications shall prevail.

1.4. EXCLUSIONS:

The work listed below shall be provided by others or under other sections of this specification:

A. 120 VAC or 240 VAC power supply to the system control panel.

B. Interlock wiring and conduit for the shutdown of HVAC, dampers, and/or electric power supplies, relays, or shunt trip breakers.

C. Connection to local/remote fire alarm systems, listed central alarm station(s).

1.5 QUALITY ASSURANCE:

A. MANUFACTURER:

1. The manufacturer of the clean agent system hardware and detection components shall have at least ten years of experience designing and manufacturing similar suppression systems and refer to similar installations providing satisfactory service.
2. The manufacturer's name, part numbers, and serial numbers shall appear on all major components.
3. All devices, components, and equipment shall be the same manufacturer's products.
4. All devices, components, and equipment shall be new, standard products of the manufacturer's latest design and suitable to perform the functions intended.
5. All devices and equipment shall be U.L. listed or F.M. approved.
6. Locks for all cabinets shall be keyed alike.

B. INSTALLER:

1. The supplier shall train the installing contractor to design, install, test, and maintain a clean agent system.
2. When possible, the installing contractor shall employ a NICET-certified special hazard designer, level 2 or above, who will be responsible for this project.
3. The installing contractor shall be an experienced firm regularly installing automatic clean agents or similar fire suppression systems in strict accordance with all applicable standards.
4. The installing contractor must have at least five (5) years of experience designing, installing, and testing clean agent or similar fire suppression systems. A list of systems of a similar nature and scope shall be provided on request.
5. The installing contractor shall show evidence that his company carries a minimum $2,000,000.00 liability and completed operations insurance policy. These limits shall supersede limits required in the general conditions of the specifications.
6. The installing contractor shall maintain or have access to a clean agent recharging station. The installing contractor shall provide proof of his ability to recharge the largest clean agent system within 24 hours after a discharge. Include the amount of bulk agent storage available.
7. The installing contractor shall be an authorized stocking distributor of the clean agent system equipment so that immediate replacement parts are available from inventory.
8. The installing contractor shall show proof of emergency service available twenty-four hours, seven days a week.

C. SUBMITTALS:

1. The installing contractor shall submit the following design information and drawings for approval before starting work on this project:
   a) Field installation layout drawings having a scale of not less than 1/8" =1’-0" (1:100m) detailing the location of all agent storage tanks, pipe runs including pipe sizes and lengths, control panel(s), detectors, manual pull stations, abort stations, audible and visual alarms, etc.
   b) Auxiliary details and information such as maintenance panels, door holders, special sealing requirements, and equipment shutdowns.
   c) Separate layouts, or drawings, shall be provided for each level (i.e., room, underfloor, and above the ceiling) and for mechanical and electrical work.
   d) A separate layout or drawing shall show isometric details of agent storage containers, mounting details, proposed pipe runs, and sizes.

e) Electrical layout drawings shall show the location of all devices, including point-to point conduit runs and a description of the method(s) used for detector mounting.
f) Provide an internal control panel wiring diagram, including power supply requirements and field wiring termination points.
g) Graphic Annunciator wiring schematics and dimensioned display panel illustration shall be provided. (Optional device)
h) Complete hydraulic flow calculations from Fike's UL/FM Approved Flow Calculation Program shall be provided for all engineered Clean Agent systems. The individual pipe sections to be used, as shown on the isometrics, must be identified and included in the calculation. Total agent discharge time must be shown and detailed by zone.
i) Provide calculations for the battery standby power supply considering the power requirements of all alarms, initiating devices, and auxiliary components under full load conditions.
j) A complete sequence of operations shall be submitted detailing all alarm devices, shutdown functions, remote signaling, damper operation, time delay, and agent discharge for each zone or system.

PART 2 – AGENT REQUIREMENTS

2.1 SYSTEM DESCRIPTION AND OPERATION:

A. The system shall be a Clean Agent Fire Suppression System utilizing FK-5-1-12 as the fire extinguishing agent supplied by:

Fike Corporation
704 South 10th Street
Blue Springs, MO 64015

B. The Clean Agent Fire Suppression System shall provide a minimum design concentration by volume, in all areas and/or protected spaces, at the minimum anticipated temperature within the protected area. Per NFPA 2001, the system design shall not exceed a maximum exposure limit concentration level of 10% by volume unless provisions for room evacuation before agent release is provided. All personnel should be able to leave the protected space before the discharge or at least within 5 minutes of the commencement of discharge.

C. The system shall be complete in all ways. It shall include all mechanical and electrical installation, all detection and control equipment, agent storage containers, suppression agent, system actuation equipment, discharge nozzles, pipe and fittings, manual release and abort stations, audible and visual alarm devices, auxiliary devices and controls, shutdowns, alarm interface, caution/ advisory signs, functional checkout and testing, training and all other operations necessary for a functional U.L. Listed and/or F.M. Approved Clean Agent Fire Suppression System.

D. Provide two (2) inspections during the first year of service. Inspections shall be made at six-month intervals when the system is first placed into regular service.

E. The general contractor shall seal and secure the protected spaces against agent loss and/or leakage during the 10-minute "hold" period.

F. The system(s) shall be actuated by a combination of ionization and/or photoelectric detectors installed in accordance with the guidelines stated in NFPA 72.

G. Detectors shall be wired in the Sequential Detection method of operation, standard Cross-Zoned

detection, or single detector release. No other detection/wiring arrangements will be acceptable.

H. The automatic operation of each protected area shall be as follows:

1. Actuation of one (1) detector within the system shall:
   a) Illuminate the "ALARM" lamp on the control panel face.
   b) Energize an alarm bell and/or an optional visual indicator.
   c) Transfer sets of 5 Amp rated auxiliary contacts which can perform auxiliary system functions such as:
      (1) Operate door holders/closures on access doors.
      (2) Transmit a signal to a fire alarm system.
      (3) Shutdown HVAC equipment.
   d) Light an individual lamp on an optional graphic annunciator.

2. Actuation of a 2nd detector within the system shall:
   a) Illuminate the "PRE-DISCHARGE" lamp on the control panel face.
   b) Energize a pre-discharge horn or horn/strobe device.
   c) Shut down the HVAC system and/or close dampers.
   d) Start time-delay sequence (not to exceed 60 seconds).
   e) The system abort sequence is enabled at this time.
   f) Light an individual lamp on an optional graphic annunciator.

3. After completion of the time-delay sequence, the Clean Agent Fire Suppression System shall activate, and the following shall occur:
   a) Illuminate a "RELEASE" lamp on the control panel face.
   b) The shutdown of all power to high-voltage equipment
   c) Energize a visual indicator(s) outside the hazard in which the discharge occurred.
   d) Energize a "System Release" audible device. (Optional)

4. The system shall be capable of being actuated by manual discharge devices located at each hazard exit. Operation of a manual device shall duplicate the sequence described above, except that the time delay and abort functions SHALL be bypassed. The manual discharge station shall be of the electrical actuation type and shall be supervised at the main control panel.

5. The system shall be capable of providing a "PRE-ALARM" feature that can give advanced warning `of a possible alarm condition.

2.2 MATERIALS AND EQUIPMENT:

A. GENERAL REQUIREMENTS:

1. The Clean Agent Fire Suppression System materials and equipment shall be standard products of the supplier's latest design and suitable to perform the functions intended. When one or more pieces of equipment must perform the same function(s), they shall be duplicates produced by one Manufacturer.
2. All devices and equipment shall be U.L. Listed and/or F.M. Approved.

C. AGENT STORAGE AND DISTRIBUTION:

1. Each system shall have its own supply of clean agent.

2. The system design can be modular, central storage, or a combination of both design criteria utilizing a fast-acting rupture disc valve. The valve shall contain a scored, non-fragmenting rupture disc to provide an immediate total discharge of the suppression agent.
3. Systems shall be designed in accordance with the manufacturer's guidelines.

4. Each supply shall be located within the hazard area, or as near as possible, to reduce the amount of pipe and fittings required to install the system.

5. The clean agent shall be stored in FIKE P/N 70-XXX Series Agent Storage Containers. Containers shall be super-pressurized, with dry Nitrogen, to an operating pressure of 500 psi @ 70° F (34.5 bar @ 21° C). Containers shall be of high-strength alloy steel construction and conform to NFPA 2001.

6. Containers shall be actuated by the following methods:
   a) Single container applications (Electric) – By an Impulse Valve Operator (IVO) wired through a Fike P/N 10-2748 Impulse Releasing Module (IRM). This method allows mechanical release.
   b) Multiple container applications (Electric / Pneumatic) – The 1st container is operated by an Impulse Valve Operator (IVO) wired through a Fike P/N 10-2748 Impulse Releasing Module (IRM). 6 additional containers equipped with an Impulse Valve Pneumatic Operator(s) (IVPO) can be operated by the pressure from the 1st container. This method allows mechanical release.
   c) Multiple container applications (Electric) – By Impulse Valve Operators (IVO) wired through a Fike P/N 10-2748 Impulse Releasing Modules (IRM) located at each agent storage container. (maximum six container system). This method does not allow mechanical release.

7. Each container shall have a pressure gauge and low-pressure switch to provide visual and electrical supervision of the container pressure. The low-pressure switch shall be wired to the control panel to provide an audible and visual "Trouble" alarm if the container pressure drops below 478 psi (33 bar). The pressure gauge shall be color coded to provide an easy visual indication of container pressure.

8. Each container shall have a pressure relief provision that automatically operates when the internal temperature exceeds 150°□ F (66° C).

9. Engineered discharge nozzles shall be provided, within the manufacturer's guidelines, to distribute the suppression agent throughout the protected spaces. The nozzles shall be FIKE P/N 80-XXX designed to provide proper agent quantity and distribution.
   a) Nozzles shall be available in NPT sizes 1/2" – 2.0" (15mm- 50mm). Each size shall be available in 180° and 360° distribution patterns.

10. Distribution piping and fittings shall be installed per the manufacturer's requirements, NFPA 2001, and approved piping standards and guidelines.
    a) All distribution piping shall be installed by qualified individuals using good, accepted practices and quality procedures.
    b) All piping shall be adequately supported and anchored at all directional changes and nozzle locations.
    c) All piping shall be reamed, blown clear, and swabbed with suitable solvents to remove burrs, mill varnish, and cutting oils before assembly.
    d) All pipe threads shall be sealed with Teflon tape pipe sealant applied to the male thread ONLY.

PART 3 – ELECTRICAL REQUIREMENTS

A. CONTROL PANEL:

1. The control panel shall be an SHP PRO Conventional Control Panel, P/N 10-063-M-C-P, manufactured by Fike Corporation, Blue Springs, MO.
   a) The SHP PRO Control System, and its components, shall be U.L. listed and F.M. approved for releasing service and be suitable for Deluge/Pre-action sprinkler service.
   b) As outlined, the SHP PRO Control System shall perform all functions necessary to operate the system detection, actuation and auxiliary functions.
   c) The SHP PRO Control System shall be capable of providing 7AH or 40AH battery standby power supplies.
   d) The SHP PRO Control System shall be microprocessor based with hardware and software integration designed to guarantee reliability.
   e) The SHP PRO Control System shall support Cross Zoned, Sequential, Single Detector Release, and Manual Release detection/actuation methods.
   f) The SHP PRO Control System shall provide the following capabilities and functions:
      (1) Three (3) Class B (Style Y) notification appliance circuits rated for 2.0 amps @ 24 VDC.
      (2) Up to two (2) Style B initiating device circuits capable of sequential alarm, cross-zone, or single detector release operation with a maximum system capacity of 50 detectors.
      (3) Three (3) Style B initiating device circuits capable of monitoring closed contact devices.
      (4) Optional Class A module that converts all five initiating device circuits to Style D wiring and operation.
      (5) Optional Class A module that converts all five output circuits to Style Z (3 NAC, 2 Releasing)
      (6) Eight (10) Status LEDs plus the alpha-numeric display for troubleshooting: A.C. normal; alarm; pre-discharge; release; supervisory; trouble; panel silenced; abort; release disabled; and ground fault.
      (7) Programmable pre-discharge and discharge timers
      (8) Resettable and continuous auxiliary output power
      (9) Five (5) optional Abort types
      (10) Intelligent Transistor protection to prevent noise spikes and microprocessor failure from inadvertently activating release outputs
      (11) A dedicated Disarm switch for release outputs
      (12) Dedicated alarm and trouble contacts programmable for alarm, trouble, pre-discharge, discharge, abort, supervisory, or water flow functions, depending on panel configuration.
      (13) Two (3) Form "C" relays, rated at two amps, are provided on the SHP PRO□ panel board. Installation of up to two (2) optional CRM4 Relay Modules (P/N 10-2204) will provide up to eight (8) additional 2 amp relays.
      (14) Multiple input power source - 120 VAC or 240 VAC
      (15) 4.0 amp @ 24 VDC power supply to operate high current draw horns and strobes.
      (16) Available in either Red or Gray finish

B. DETECTORS

1. The detectors shall be spaced and installed in accordance with the manufacturer's specifications and the guidelines of NFPA No. 72 – current edition.
   a) The Photoelectric detector shall be a Fike P/N 63-1024 *
      * Additional detectors are available from Fike.

C. DETECTOR BASES:

1. The detector bases shall be selected according to their operational characteristics and base size.

   a) 430-ohm bases provide Sequential or Cross Zone detection on the SHP PRO initiating circuits. The bases shall be Fike P/N 67-1034 (6"/15mm) base or P/N 67-1036 (4"/10mm) base.*
   b) 220-ohm bases provide Cross Zone or Single Detector Release detection on the SHP PRO initiating circuits. The bases shall be Fike P/N 67-1035 (6"/15mm) base or P/N 67-1037 (4"/10mm) base.*
   c) The following old-style bases must be used when using the SHP PRO with a Graphic Annunciator panel.
      (1) Fike P/N 67-1034 (6”/15 cm) 430 ohm base.
      (2) Fike P/N 67-1036 (4”/10 cm) 430 ohm base.
      (3) Fike P/N 67-1035 (6”/15 cm) 220 ohm base.
      (4) Fike P/N 67-1037 (4”/10 cm) 220 ohm base.
      * Additional bases are available from Fike Corporation.

D. MANUAL RELEASE (Electric):

1. The electric manual release switch shall be a dual-action device that manually discharges the Clean Agent Fire Suppression System when used with the Fike SHP PRO Control System.
   a) The Manual Release switch shall be a Fike P/N 10-1638 or a Manual Pull station, P/N 02-3710.
   b) The Manual Release switch or Manual Pull station shall be a dual action device requiring two distinct operations to initiate a system actuation.
   c) Manual actuation shall bypass the time delay and abort functions, cause the system to discharge, and cause all release and shutdown devices to operate in the same manner as if the system had operated automatically.
   d) A Manual Release or Manual Pull switch shall be located at each exit from the protected hazard and shall have an advisory sign, Fike P/N 02-10312, provided at each location.
   e) The Manual Release or Pull station shall be connected to an FRCM programmed for the intended function.

E. MANUAL RELEASE (Mechanical):

1. Mechanical Manual Release shall be made available in the event all battery backup and commercial power is lost. The Impulse Valve Operator (IVO) has a manual strike button for mechanical manual release for actuation methods a and b in paragraph 5 on page 4. Consideration should be given to the convenience of operation and egress from the hazard area(s).

F. ABORT STATION (Optional):

1. The optional Abort Station shall be the "Dead Man" type and shall be located next to each manual switch.
   a) "Locking" or "Keyed" abort stations shall not be permitted.
   b) The Abort Station shall be a Fike P/N 10-1639.
   c) The Abort Station shall be supervised and indicate a trouble condition at the SHP PRO Control Panel if depressed and no alarm condition exists.
   d) The (optional) Abort Station shall be located adjacent to each manual station. It can be furnished with a Manual Release Switch or a Manual Release Switch and (optional) Digital Countdown Timer (Fike P/N 20-046).
   e) The Abort Station shall be connected to an FRCM programmed for the intended function.

G. AUDIBLE and VISUAL ALARMS:

1. Alarm audible and visual signal devices shall operate from the SHP PRO Control Panel.
   a) The Alarm Bell, Alarm Horn, and Horn/Strobe devices shall be Fike P/N's 20-XXX or equal in quality, performance, and features. An “AGENT” label shall be attached to the strobe lens when required.
   b) The visual alarm unit shall be a Fike P/N 20-XXX Vertical Strobe device or equal in quality, performance, and features. An “AGENT” label shall be attached to the strobe lens when required
   c) A Strobe device shall be placed outside and above each exit door from the protected space. Provide an advisory sign at each light location.

H. CAUTION and ADVISORY SIGNS:

1. Provide signs, as required, to comply with NFPA 2001 and the recommendations of the equipment supplier:
   a) Entrance sign: One (1) is required at each entrance into a protected space. (Fike P/N 02-10139)
   b) Manual Discharge sign: One (1) is required at each manual discharge station. (Fike P/N 02-10317)
   c) Flashing Light sign: One (1) is required at each flashing light over each exit from a protected space.

I. AUXILIARY PANELS: (Optional)

1. A Graphic Annunciator panel will be mounted adjacent to the SHP PRO control panel. The graphic annunciator shall show a scale layout of the protected area(s) and have indicator lamps to locate each system detector and/or other system components. The panel shall have a lamp test switch located on the panel face. Other panel options shall be available. The scale shall not be less than 1/8" = 1’-0" (1:100 m).

J. SYSTEM and CONTROL WIRING:

1. All system wiring shall be furnished and installed by the contractor.
   a) All wiring shall be installed in electrical metallic tubing (EMT) or conduit and must be installed and kept separate from all other building wiring.
   b) All system components shall be securely supported independent of the wiring. Conduit and wiring runs shall be straight, neatly arranged, adequately supported, and installed parallel and perpendicular to walls and partitions.
   c) The sizes of the conductors shall be those specified by the manufacturer. Color coded wire shall be used. All wires shall be tagged at all junction points and free

from shorts, earth connections (unless so noted on the system drawings), and crosses between conductors. Final terminations between the SHP PRO control panel and the system field wiring shall be made under the direct supervision of a factory-trained representative.

d) Qualified individuals shall install all wiring in a neat and workmanlike manner to conform to the National Electrical Code, Article 725, and Article 760, except as otherwise permitted for limited energy circuits, as described in NFPA 72 -1993 edition. Wiring installation shall meet all local, state, province, and/or country codes.
e) The complete system electrical installation and all auxiliary components shall be connected to earth ground in accordance with the National Electrical Code.

K. SYSTEM INSPECTION and CHECKOUT:

1. After the system installation has been completed, the entire system shall be checked out, inspected, and functionally tested by qualified, trained personnel, in accordance with the manufacturer's recommended procedures and NFPA standards.
   a) All containers and distribution piping shall be checked for proper mounting and installation.
   b) All electrical wiring shall be tested for proper connection, continuity, and resistance to earth.
   c) The complete system shall be functionally tested in the presence of the owner or his representative. All functions, including system and equipment interlocks, must be operational five (5) days before the final acceptance tests.
   d) Each detector shall be tested per the manufacturer's recommended procedures, and test values will be recorded.
   e) All system and equipment interlocks, such as door release devices, audible and visual devices, equipment shutdowns, local and remote alarms, etc., shall function as required and designed.
   f) Each SHP PRO control panel circuit shall be tested for trouble by inducing a trouble condition into the system.

L. TRAINING REQUIREMENTS:

1. Before final acceptance, the installing contractor shall provide operational training to each shift of the owner's personnel. Each training session shall include system SHP PRO Control Panel operation, manual and (optional) abort functions, trouble procedures, supervisory procedures, auxiliary functions, and emergency procedures.

M. OPERATION and MAINTENANCE:

1. Before final acceptance, the installing contractor shall provide the owner with complete operation and maintenance instruction manuals, four (4) copies for each system. All system operation and maintenance aspects shall be detailed, including piping isometrics, wiring diagrams of all circuits, a written description of the system design, sequence of operation, and drawing(s) illustrating control logic and equipment used in the system. Checklists and procedures for emergency situations, troubleshooting techniques, maintenance operations, and procedures shall be included in the manual.

N. AS-BUILT DRAWINGS:

1. Upon completion of each system, the installing contractor shall provide four (4) copies of the system "As-Built" drawings to the owner. The drawings shall show actual installation details, including all equipment locations (i.e., control panel(s), agent container(s), detectors, alarms, manuals, aborts, etc.), as well as piping and conduit routing details. Show all room or facility modifications, including door and/or damper installations, completed. One (1) copy of reproducible engineering drawings shall be provided, reflecting all actual installation details.

O. ACCEPTANCE TESTS:

1. At the time "As-Built" drawings and maintenance/operations manuals are submitted, the installing contractor shall submit a "Test Plan" describing procedures to be used to test the control system(s). The Test Plan shall include a step-by-step description of all tests to be performed and indicate the type and location of the test apparatus. The tests shall demonstrate that the operational and installation requirements of this specification have been met. All tests shall be conducted in the owner's presence and not until the Test Plan has been approved.
2. The tests shall demonstrate that the entire control system functions as designed and intended. All circuits shall be tested: automatic actuation, solenoid and manual actuation, HVAC and power shutdowns, audible and visual alarm devices, and manual override of abort functions.
   Supervision of all panel circuits, including A.C. power and battery power supplies, shall be tested and qualified.
3. In each protected space, a room pressurization test shall be conducted to determine the presence of openings, which would affect the agent system concentration levels. The test(s) shall be performed using the Retro-Tec Corp. Door Fan system, or equivalent, with an integrated computer program. All testing shall be in accordance with NFPA 2001, current edition.
4. If room pressurization testing indicates that openings exist which would result in leakage and/or loss of the extinguishing agent, the installing contractor shall be responsible for coordinating the proper sealing of the protected space(s) by the general contractor or his sub-contractor or agent. The general contractor shall adequately seal all protected space(s) against agent loss or leakage. The installing contractor shall inspect all work to ascertain that the protected space(s) have been adequately and properly sealed.
5. THE SUPPRESSION SYSTEM INSTALLING CONTRACTOR SHALL BE RESPONSIBLE FOR THE SUCCESS OF THE ROOM PRESSURIZATION TESTS.
6. If the first room pressurization test is not successful, in accordance with these specifications, the installing contractor shall direct the general contractor to determine and correct the cause of the test failure. The installing contractor shall conduct additional room pressurization tests at no extra cost to the owner until a successful test is obtained. Copies of successful test results shall be submitted to the owner for the record.
7. Upon acceptance by the owner, the completed system(s) shall be placed into service.

P. SYSTEM INSPECTIONS:

1. The installing contractor shall provide two (2) inspections of each system installed under this contract during the one-year warranty period. The first inspection shall be at the six-

month interval and the second at the 12-month interval after system acceptance.

Inspections shall be conducted in accordance with the manufacturer's guidelines and the recommendations of NFPA 2001.

2. After inspection completion, documents certifying satisfactory system(s) operation shall be submitted to the owner.

Q. WARRANTY:

1. All FIKE system components furnished, and installed under this contract, shall be guaranteed against defects in design, materials, and workmanship for the full warranty period which is standard with the manufacturer, but in no case less than one (1) year from the date of system acceptance.

END OF SECTION 22 01 50

ORANGE & ROCKLAND UTILITIES, INC
SVOC NEW OFFICE ADDITION

Tax Map ID 56.52-1-2
390 West Route 59
Village of Spring Valley
Town of Ramapo
Rockland County, New York

PLUMBING
TECHNICAL SPECIFICATIONS

PREPARED BY

OMDEX INCORPORATED CONSULTING ENGINEERS
21 Cross Avenue, Midland Park, NJ 07432-1811, 201-444-0753, FAX 201-444-0839

April 28, 2025 – Issued for Bidding and Building Department Filing

PROFESSIONAL ENGINEER

BRIAN W. PASECHNICK, PE
NY License No. 91385

SECTION 22 01 50 - PLUMBING GENERAL PROVISIONS

PART 1 - GENERAL

1.1 RELATED DOCUMENTS

A. Drawings and general provisions of contract, including General and Supplementary Conditions and Division 1 Specification sections, apply to work specified in this section.

B. Section 23 00 00 - Special Requirements for Mechanical and Electrical Work shall apply.

C. Section 23 00 50 “Vibration Isolation and Seismic Restraints for HVAC, Fire Protection, Electrical and Plumbing” shall apply.

1.2 SCOPE OF WORK

A. Except otherwise specified under “Related Work Not Included” the work of this Division consists of furnishing all labor, materials, equipment and appliances necessary and required to completely do all Plumbing Work as indicated on the Drawings, described or referred to in the Specifications. The following is a brief outline of the work to be done under this Division. It is given only as an aid to the bidders and is not intended to be considered complete; without excluding the generality of the foregoing, the work includes the following:

1. Complete sanitary drainage and venting systems with all required connections to all plumbing fixtures and equipment and sanitary house sewers to five (5) feet beyond the outside building walls, including connection to the sanitary sewers within the site that is provided under site utility work.
2. Storm water drainage system conveying all storm water from flat roofs to five (5) feet beyond the outside building walls, including connections to the storm water sewers within the site that are provided under the site utility work.
3. Domestic water, service including connection to the domestic water service within the site that are provided under the site utility work. Include heated enclosure per Veolia requirements.
4. Complete domestic hot and cold water distribution systems, including connections to all plumbing fixtures and equipment requiring hot and cold water.
5. Plumbing fixtures and trim for same.
6. Furnishing of access doors.
7. Domestic water heaters and accessories.
8. Floor, funnel and roof drains.
9. Hose bibbs, wall hydrants, shock absorbers and vacuum breakers.
10. Sump pumps,
11. Sleeves, hangers and supports.
12. Insulation on piping.
13. Make all required plumbing connection for fixtures and equipment provided under other Divisions or Sections.
14. Valves, valve tags and charts.
15. Color coding and stenciling of all piping systems.
16. Testing of all systems provided under this Division.
17. Shop drawings.
18. Complete sprinkler systems.

19. Prime painting.
20. Hot Box for meters and Reduced pressure backflow preventors.
21. Apply for, obtain and pay for all permits, certificates, inspections and approvals required in connection with all work provided under this division.
22. Where due to union regulations or trade agreements, any of the work shown on the drawings or specified herein is not considered Plumber's Work, the Contractor shall provide the work in question, and the Contractor shall be held responsible for the complete installation.
23. It is not the intention of these Specifications to describe nor the Contract Drawings to show in detail, all the various pieces of apparatus and appurtenances and their connections. The Contractor shall as part of the Contract, furnish and install all incidentals, such as pipe, fittings valves, etc., required to complete the installation of the fixtures and equipment.
    The Contractor shall refer to Architectural Drawings and Plumbing Drawings for exact location of fixtures and equipment including type and quantity. The Contractor shall be responsible for providing and connecting all fixtures and equipment.

1.3 RELATED WORK INCLUDED UNDER OTHER DIVISIONS OR SECTIONS

A. The following items of work shall be provided under other Divisions or Sections:

1. Installation of access doors.
2. Finished patching and painting.
3. Cap and base flushing for roof drains and piping passing through roof.
4. Temporary water, heat, light, power and toilets.
5. Keeping site and excavations free from water.
6. Subsoil drainage inside and outside of the building.
7. Concrete foundations, pads, etc., for equipment.
8. Fire extinguishers and cabinets for same except within fire hose valve cabinets.
9. Toilet accessories
10. Ladders to equipment and valves.
11. Electrical power wiring, conduit etc.
12. Domestic water service within the site from five (5) feet beyond the outside building walls including curb valves and boxes etc.
13. Exterior gutters and leaders.

1.4 SHOP DRAWINGS

A. Prior to installation, submit shop drawings covering the following items:

1. Plumbing fixtures and trim for same.
2. Valves, valve tags and valve charts.
3. Insulation for piping.
4. Floor, funnel, area and roof drains.
5. Domestic hot water heaters and accessories.
6. Hangers, supports and access doors.
7. Hose bibbs, wall hydrants, shock absorbers and vacuum breakers.
8. Sprinkler equipment.
9. Access doors.
10. Pipe and fittings materials for all systems.
11. Reduced pressure backflow preventors.
12. Sump pumps.

13. The above listed items are major equipment and do not limit the Contractor's responsibility to submit shop drawings for all equipment and accessories which are to be provided under this Division.

1.5 WATER SUPPLY CONTAMINATION

A. All water supply connections to plumbing fixtures and other equipment to be installed under this Division shall be in accordance with the rules relative to Submerged Inlets and Protective Methods to be applied to prevent contamination of water as required by Local and State Regulations.

1.6 CONCEALED PIPING

A. All piping installed in finished areas shall be completely concealed within hung ceilings, furrings, soffits, pipe spaces, etc.
B. Where complete concealment is impossible because of obstructions such as beams, ducts, lights, piping, etc., the Contractor shall not install any work before first consulting with the Architect and his instructions (written or on revised drawings) shall be followed.
C. All piping installed below grade shall have a minimum cover of four (4) feet, to provide complete protection from frost or vehicular damage, except as noted on the Drawings.
D. All piping, etc., shall be completely tested and approved by all authorities having jurisdiction before any concealment begins.

1.7 EQUIPMENT CONNECTIONS FOR EQUIPMENT FURNISHED UNDER OTHER DIVISIONS OR SECTIONS

A. The Contractor shall make all plumbing connections to all equipment and fixtures requiring such connections as shown on Drawings whether the equipment and fixtures are furnished under other Divisions or Sections of this Specification. Determine if combination fittings have a means of shutoff or require the installation of check valves. Make all final connections to fixtures and/or equipment, including installations of all special traps, supplies, control valves, vacuum breakers, etc. furnished with fixtures and/or equipment, and furnish all material necessary that is not supplied with the fixtures and/or equipment.
B. Leave valve water connections in equipment spaces and other locations where shown for the use of other Divisions or Sections. On each valved outlet for equipment with submerged inlets, provide a back flow preventor or swing check valve and a vacuum breaker after the shutoff valve as indicated on drawings. Funnel drains and/or floor drains for the heating and ventilation work shall be provided.
C. Fixture supplies and traps where exposed to view shall be chrome plated brass. Where concealed from view, in cabinets, they may be rough brass. All fixture supplies shall have stops.

1.8 INTENT OF SPECIFICATIONS

A. This Specification is not intended to describe, nor the Drawings to show, in detail the various systems, equipment, or the connections thereto. The Contractor shall, as part of the Contract furnish and install all equipment, accessories, supports, pipe connections, fittings, valves, controls, insulation, testing, etc., as herein specified or required to make the various systems complete and ready for proper operation.
B. The Drawings are diagrammatic and indicate the general arrangement and location of

equipment, piping, fixtures, etc. The Contractor shall, without extra compensation, make all reasonable modifications in the layout work that may be required to suit actual job conditions.

C. Any items of work described in this Specification, but not shown on the Drawings, or vis-versa, shall be furnished and installed as are items both specified and shown.

D. All plumbing fixtures and drains indicated on the Architectural Drawings, whether shown on the Plumbing Drawings or not, shall be furnished and installed with all required piping, trim and supports as herein specified.

E. Where a proprietary name of an item is specified, the intent is to establish the items as a manufacturer's standard.

1.9 INSTALLATION NOTES

A. The size of water, soil, waste, storm water and vent piping shall be as determined by the local and state codes, rules and regulations for plumbing the drainage, except where specifically noted to be larger by the Specifications, or plans and all fixed rules of installation, as set forth in the State and Local Codes, rules and regulations, shall be followed as part of the Specifications.

B. It is the intent that each part of the Plumbing System shall be complete in all details and water lines provided with all control valves as indicated on Drawings, or as may be required for the proper control of the pipe lines under this Division so that any fixture, line or piece of apparatus may be cut out for repair without interference or interruption of the service to the rest of the building.

C. The Contractor shall examine carefully the architectural and structural plans in detail and familiarize himself with all conditions relative to the installation of piping, particularly where same is concealed behind furring or in hung ceiling.

D. In no case shall the Contractor permit his pipes to be exposed beyond finished plaster lines unless specifically shown on Drawings. He shall consult with the other trades in the building and install his piping in such a way as to least interfere with the installation of the work of other trades.

E. Piping shall be installed, whether indicated or not, so as to rise and/or drop to clear any and all conduits, lighting fixtures, ductwork and heating mains to maintain the desired clear heights. The Contractor shall consult with the other trades and facilitate the erection of the equipment and piping.

F. Run piping straight and as direct as possible, in general forming right angles with or parallel to walls or other piping. Risers and stacks shall be erected plumb and true.

G. After cutting, all pipes shall be reamed out to full bore and before erection the inside of all pipes shall be thoroughly cleaned.

H. No piping or work shall be concealed or covered until all required tests have been satisfactorily completed and work has been approved by the Architect and all other authorities having jurisdiction.

I. Branch connections shall be made with "Wye" and long "Tee-Wye" fittings, short ¼ bends, common offsets and double hubs will not be permitted. Short "Tee-Wye" fittings are to be used in vertical piping only. All fittings shall conform to code requirements.

J. Cleanouts shall be provided at foot of all stacks, storm water leaders, at changes of directions, at the ends of branch runs where shown, every 50 feet and as required by Code, and shall be terminated as described under cleanouts.

K. The house drains must be run at a minimum grade of 1/8" per foot downward in the direction of flow. Wherever possible a ¼" per foot pitch shall be maintained. Branch connections to stacks from fixtures shall pitch ¼" per foot where possible. Attention is again called to the necessity of maintaining the ceiling heights established.

L. Provide shock absorbers on hot and cold-water branch pipes to fixtures and equipment. Shock absorbers shall be as hereinafter specified.

M. The water piping shall all be installed so as to drain, and branches shall not be trapped but shall have continuous pitch. Where necessary to raise or lower mains, the same shall be provided with a drip and shall be properly valved.
N. All materials shall be new and installed in a first-class manner.
O. In erecting pipe, friction wrenches and vises shall be used exclusively, and any pipe that is; cut, dented or otherwise damaged shall be removed and replaced by the Contractor.
P. All ferrous to non-ferrous pipe connections shall be made with approved dielectric fitting, unions, or isolating joints to prevent any electrolytic action between dissimilar materials.
Q. Any piece of pipe 6” in length or less shall be considered a nipple. All nipples with unthreaded portion 1-1/2” and less shall be of weight corresponding to fitting connected. Only shoulder nipples shall be used, close nipples will not be accepted.

1.10 CLEANING PROTECTION AND ADJUSTING

A. The Contractor shall be responsible for the protection of all plumbing fixtures and equipment against breakage, damage, or theft at all times until final acceptance of the job.
B. All openings left in floor for passage of lines of soil, storm, waste and vent, and water supply pipes shall be covered and protected. See Section 15000, 1.21,0. All set traps shall be sealed with oil or molasses. Due precautions shall be taken against freezing during cold weather. All pipes shall be protected with suitable coverings as soon as set. All open ends of pipes shall be closed by a plug or cap fittings to prevent obstruction and damage. The use of new permanent water closets and other new plumbing fixtures during the progress of the work is prohibited.
C. As soon as installed, all metal fixture trimmings shall be thoroughly covered by the Contractor with non-corrosive grease which shall be maintained until all construction work is completed.
D. Upon the completion of the work, all fixtures and trimmings shall be thoroughly cleaned and polished and free from all marks and left in first-class condition.
E. Upon completion of the work, test all pumps, equipment, flush valves and faucets for leaks or drips and adjust same for quiet operation.

1.11 IDENTIFICATION

A. All control valves shall be suitably tagged. Tags shall be brass 1-1/2” in size on which shall be stamped designating numbers 1” high, filled in with black enamel, and securely fastened to valve hand-wheels with heavy brass “S” hooks.
B. Tags used shall be of a different pattern to differentiate from those supplied under the Heating, Ventilating and Air Conditioning Work. The System of numbering shall be such as to discriminate between the different classes of services and shall indicate the floor level on which the valve is installed.
C. In the areas where removable ceiling occur, furnish to the General Contractor for installation by him appropriate tile markers to indicate locations of valves or other equipment.
D. Charts shall be provided for each Piping System and shall consist of schematic diagrams of piping layouts showing and identifying each valve and piece of equipment, etc. Upon completion, one (1) copy of diagram and valve chart, suitably framed under glass, shall be furnished and mounted where directed.

1.12 GUARANTEE

A. The Contractor shall submit in writing (triplicate) a guarantee of Plumbing and Sprinkler work in accordance with the standard conditions as established under the AIA rules and regulations.

B. Such guarantee shall be for a period of one (1) year after the date of final acceptance of the work, and shall include the making of any repairs which may be required owing to the defective workmanship and materials.

END OF SECTION 22 01 50

SECTION 22 03 20 - PIPING AND PIPE FITTINGS FOR PLUMBING

PART 1 - GENERAL

1.1 RELATED DOCUMENTS

A. Drawings and general provisions of contract, including General and Supplementary Conditions and Division 1 Specification sections, apply to work specified in this section.

B. Section 23 00 00- Special Requirements for Mechanical and Electrical Work shall apply.

C. Section 23 00 50 - "Vibration Isolation and Seismic Restraints for HVAC, Fire Protection, Electrical and Plumbing" shall apply.

1.2 SCOPE OF WORK

A. The work includes the providing of all labor, materials, accessories, services and tests necessary to install complete and make ready for operation by the Owner, all work as shown on Drawings and as specified hereinafter.

PART 2 - PRODUCTS

2.1 MATERIALS

A. The various piping systems shall be of the following materials and shall be in accordance with the latest ASTM and ASME Standards.

B. Domestic water service piping within the site from the point of connection the domestic water and fire service provided under site utility work to within the building shall be ductile iron pipe conforming to the requirements of AWWA C151 Class 52, with push on joints. Mechanical joints shall be provided at all connections for fitting and valves. Fittings shall conform to AWWA C110, 150 psi working pressure.

C. All above ground soil, waste, vent and storm water piping shall be service weight No-Hub cast iron soil pipe and fittings using a stainless-steel corrugated shield and screw clamp assembly over a one-piece neoprene sealing sleeve. The gasket sleeve shall conform to ASTM Standard C-564. Cast iron soil pipe and fittings shall be made in accordance to CISPI Standard 310-90.

D. All underground soil, waste, vent and storm water piping shall be service weight cast iron soil piping and fittings with grooved hub and male spigot compression type joints using a neoprene gasket and lubricant ASTM A-74 & ASTM C-564 similar to tyler pipe TY-SEAL. Provide required adaptor fittings to make connections to piping materials provided under site utility work.

E. Interior above ground domestic water piping shall be type "L" copper, hard temper, conforming to ASTM B88-58, or latest revision with a working pressure of 150 P.S.I.G. Fittings shall be wrought copper of weight corresponding to the piping to which they are attached. Joints shall be soldered with 95-5 lead free solder, 95% tin and 5% antimony.

F. Interior underground domestic water piping shall be Type "K" copper of Chase, Anaconda or Revere or approved equal, hard temper ASTM-B-88 with silver brazing end fittings. Fittings shall be brass or bronze, banded pattern, brazing type, having pre-inserted silver brazing allow or face-fed type and shall be as manufactured by Walworth, Crane or Flagflow Co. Joints shall be made with a brazing alloy consisting of 80% copper, 15% silver and 5% phosphorous and shall conform to Handy Harmon Spec. M-195 (1300 Degrees F.) or equal. Flush shall be Handy Harmon or equal. Provide union type adapters for brazed to threaded joints. All underground domestic water pipe and fittings shall be asphaltum coated.

G. Above ground sprinkler piping shall be black steel schedule 40 pipe with 300 psi WWP threaded malleable fittings.

H. Subject to the approval of the authorities having jurisdiction, the Contractor has the option of providing grooved end pipe and fittings with mechanical joints, Vitaulic or approved equal for sprinkler piping. Hole cut piping system will not be permitted.

If the Contractor elects to provide grooved end pipe with mechanical joints, he shall state same in his bid.

I. Above ground gas piping 5" and larger, shall be Schedule 80 seamless steel pipe with steel welding fittings. Piping and fitting shall comply with gas company standards.

J. Above ground gas piping 4" and smaller shall be Schedule 40 seamless steel pipe and galvanized threaded malleable iron fittings.

1. Brazing Alloy

All brazed joints in the piping shall be made up using brazing giller alloys that bond with the base metals being brazed and that comply with Specifications for Brazing Filler Metal, ANSI/AWS A5.8.

a. Copper-to-copper joints shall be made using a copper-phosphorous brazing filler alloy (BCuP series) without flux.

b. Dissimilar metals such as copper and brass shall be joined using an appropriate flux with either a copper-phosphorous (BCuP series) or a silver (BAg series) brazing filler alloy. Apply flux sparingly and in a manner to avoid leaving any excess inside of completed joints. Use of prefluxed rod is acceptable.

NOTE: Some BAg series filler metals contain cadmium, which, when heated during brazing, can produce toxic fumes.

c. While being brazed, joints shall be continuously purged with an inert gas such as dry nitrogen or carbon dioxide to prevent the formation of scale within the tubing.

d. A visual inspection of each brazed joint shall be made to assure that the alloy has flowed completely in and around the joint and, where flux has been used, that hardened flux has not formed a temporary seal that holds test pressure.

The outside of all fluxed joints shall be washed with hot water after assembly to remove excess flux for clear visual inspection of brazed connections.

e. The outside of all tubes, joints, and fittings shall be cleaned by washing with hot water after assembly.

PART 3 - EXECUTION

3.1 TECHNICAL REQUIREMENTS

A. Each length of pipe, each pipe fittings, traps, material and/or device used in the plumbing system shall have cast, stamped or indelibly marked on it, the maker's name or mark, weight and quality of the product when such marking is required by the approved standard that applied.

B. Exposed water piping at fixtures shall be chrome plated.

C. All threaded joints shall be made with Teflon tape.

D. Nipples shall be the same material as the pipe or tubing with which they are installed. They shall be extra strong; the unthreaded portion shall not be less than one (1) inch long.

E. All changes in pipe size on soil, waste and storm water drain lines shall be made with reduced fittings for shoulder type reducers, Y fittings and 1/8 or 1/16 bends or combination Y and 1/8 bends shall be used where possible.

F. Long-turn fittings shall be used wherever conditions permit.

END OF SECTION 22 03 02

SECTION 22 03 60 - HANGERS AND SUPPORTS

PART 1 - GENERAL

1.1 RELATED DOCUMENTS

A. Drawings and general provisions of contract, including General and Supplementary Conditions and Division 1 Specification sections, apply to work specified in this section.

B. Section 23 00 00 - “Special Requirements for Mechanical and Electrical Work” shall apply.

C. Section 23 00 50 - "Vibration Isolation and Seismic Restraints for HVAC, Fire Protection, Electrical and Plumbing" shall apply.

1.2 SCOPE OF WORK

A. The work includes the providing of all labor, materials accessories, and services necessary to install complete and make ready for operation by the Owner, all work as shown on Drawings and as specified hereinafter.

PART 2 - PRODUCTS

A. The following type and figure numbers as manufactured by F & S, F & M, Grinnel or approved equal.

B.

Pipe Hanger Schedule	F & S	F & M	GRINNEL
360 Shield (split)	931	___	___
Beam Clamp	55	282	___
Multi-3 Hoop Plate	9293	239	___
Clevis Hange	86	239	260
120 deg. Shield	980	80	___
Pipe Saddle	900 Series	170+ Series	180 Series
Rigid Trapeze	710	___	Std. 45
U-Bolt	37	176	137
Adj. Steel Pipe Stanchion	421	291	259
Welded Steel Bracket	800 or 801	151 or 155	195 or 199
Single Bolt Riser Clamp	91 or 93	241	261
Double Bolt Riser Clamp	92	---	Std. 40
Structural Pipe Stanchion	720	---	---
Double Bolt Pipe Clamp 89	261	295	
Welded Beam Attachment	953	---	66

C.

Welded Beam Attachment	F & S	F & M	GRINNEL
W/B&A	966A	751	66
Insert	180A-180B	---	280
Continuous Slotted Insert	150	190	---

D. Hangers and supports for sprinkler system shall be in accordance with NFPA and specifically for fire protection systems.

E. ANCHORS

1. The Contractor shall anchor horizontal hot water and hot water circulating piping to the building. Drill required holes and provide anchoring clamps where required. Contractor shall be careful when making up anchors, so that pipe lines are not crushed.

2. Expansion Joints and Guides:

   The Contractor shall furnish and install four elbow expansion joints and guides where shown on Drawings and as required. All expansion joints shall be provided with guides.

3. Furnish shop drawings for all anchors and guides.

F. INSULATION PROTECTION

1. For all insulated pipe furnish clevis hangers with welded shields equal to F & S Mfg. Corp., Fig. 86C.

G. Provide seismic restraints as required by the International Building Code, 2002, New Jersey Edition.

PART 3 - EXECUTION

3.1 INSTALLATION REQUIREMENTS

A. Supports and hangers shall be provided for all horizontal and vertical piping. The hanger design shall conform to the ASA Code for Pressure Piping. Hangers shall be kept outside of pipe insulation.

B. All pipe supports shall be of type and arrangement as hereinafter specified. They shall be so arranged as to prevent excessive deflection and avoid excessive bending stresses between supports.

C. All bracket clamps and rod sizes indicated in these Specifications are minimum size only. The Contractor shall be responsible for structural integrity of all supports. All structural hanging materials shall have a safety factor of five (5) built-in.

D. All horizontal cast iron pipes shall be supported every five (5) feet at each hub and/or clamping assembly. When concentration of fittings occur, additional support shall be installed consistent with good trade practices.

E. All horizontal steel and copper pipe shall be supported at maximum intervals as follows: Steel pipe - up to 1-1/4" - 8'-0"; 1-1/2" to 2-1/1" - 10'-0"; 3" and larger - 12'-0". Copper and Brass Pipe - up to 1-1/4 - 6'-0"; 1-1/2" to 2-1/2" - 8'0"; 3" and larger - 10'-0". There shall be no metal-to-metal contact at supports for non- ferrous pipes. Provide 1/8" thick teflon tape or lead strips under uninsulated piping at supports. Hangers and supports shall be installed outside of insulation or insulated piping.

F. Trapeze type hangers shall be made up of angles bolted back-to-back or channels for supporting parallel lines of piping. Trapeze type hangers shall be supported with suspension rods having double nuts, and securely attached to construction with inserts, beam clamps, steel fishplates, cantilever brackets, lag screws or other approved means. Use approved type brackets for supporting piping attached along walls.

G. Maximum weights on hanger rods shall be such that stress in tension shall not exceed 9,000 psi, using root area of threaded portion. In no case, shall hanger size be less than 3/8" for pipe up to 2", 1/2" for pipe 2-1/2 to 3-1/2, 5/8" for pipe 4" to 5", 3/4" for pipe 6", 7/8" for pipe 8" to 12".

H. All required auxiliary steel for pipe supports shall be furnished and installed by the Contractor.

I. All hangers, rods, inserts, clamps, brackets, etc., shall be dipped in zinc chromate primer before installation and provided with one (1) coat of approved type paint after installation.

J. Chains, straps, perforated bars, wire hangers are not permitted. Piping shall not be hung from metal deck.

K. The Architect must approve method of supporting pipes from building structure before work is started. The Contractor shall bear all responsibility for materials and workmanship as described in this Section, and shall make sure that all hangers and supports are properly and permanently connected to building structure.

L. All pipe support shall be designed to avoid interference with other piping, hangers, electrical conduits and supports, building structures and equipment.

M. If any pipe has to be hung in spaces where no inserts have been provided, the Contractor shall drill holes from below through construction and provide rods and hangers attached to not less than two (2) approved type expansion shields. The rods on all hangers shall be of adequate size to support the loads which they carry.

N. No piping shall be hung from other piping.

O. Anchor points shall be located and constructed to permit the Piping System to take up its expansion and contraction freely in opposite direction away from the anchored points.

END OF SECTION 22 03 60

SECTION 22 05 23 - GENERAL DUTY VALVES FOR PLUMBING

PART 1 – GENERAL

1.1 RELATED DOCUMENTS

A. Drawings and general provisions of the Contract, including General and Supplementary Conditions and Division 01 Specification Sections, apply to this Section.
B. Section 23 00 00- Special Requirements for Mechanical and Electrical Work shall apply.
C. Section 23 00 50 - "Vibration Isolation and Seismic Restraints for HVAC, Fire Protection, Electrical and Plumbing" shall apply.

1.2 REFERENCE

A. Applicable provisions of Division 1 govern work under this section.

1.3 LEAD FREE REQUIREMENTS

A. All materials that contact potable water shall be lead free. Lead free refers to the wetted surface of pipe, fittings and fixtures in potable water systems that have a weighted average lead content ≤0.25% per the Federal Safe Drinking Water Act as amended January 4th 2011 Section1417.

1.4 QUALITY ASSURANCE

A. Substitution of Materials: Refer to Section GC - General Conditions of the Contract, Equals and Substitutions.

1.5 SUBMITTALS

A. Schedule of all valves indicating type of service, dimensions, materials of construction, and pressure/temperature ratings for all valves to be used on the project. Temperature ratings specified are for continuous operation.

1.6 OPERATION AND MAINTENANCE DATA

A. All operations and maintenance data shall comply with the submission and content requirements specified under section GENERAL REQUIREMENTS.

1.7 DESIGN CRITERIA

A. ANSI Z21.22 - Relief Valves and Automatic Gas Shutoff Devices for Hot Water Supply Systems.
B. ASSE 1003 - Water Pressure Reducing Valves for Domestic Water Supply Systems.
C. Where valve types (ball, butterfly, etc.) are specified for individual plumbing services (i.e. domestic water, gas, etc.), each valve type shall be of the same manufacturer unless prior written approval is obtained from the Owner.
D. Valves to be line size unless specifically noted otherwise.

PART 2 - PRODUCTS

2.1 WATER SYSTEM VALVES

A. All water system valves to be rated at not less than 125 water working pressure at 240 degrees F unless noted otherwise.

2.2 BALL VALVES:

A. 3" and smaller: Two-piece bronze body; sweat, threaded or ASTM F1960 joint connection ends, full port stainless steel ball and stem; glass filled teflon seat; teflon packing and threaded packing nut; blowout-proof stem; 600 psig WOG. Provide valve stem extensions for valves installed in all piping with insulation. Nibco 585-70-66 LF or equal by Apollo, Milwaukee, Watts.

2.3 BUTTERFLY VALVES:

A. 2-1/2" and larger: Cast or ductile iron body; stainless steel shaft; bronze, copper or teflon bushings; EPDM resilient seat; EPDM seals; EPDM encapsulated ductile iron or stainless steel disc. 200 psig WOG through 12. Valve assembly to be bubble tight to 175 psig with no downstream flange/pipe attached. Use tapped lug type valves with stud bolts or cap screws, or grooved end connection valves, permitting removal of downstream piping while using the valve for system shutoff. Nibco LD-2022 or GD-4765, or equal by Milwaukee, Victaulic or Watts.
B. Provide 10 position locking lever handle actuators for valves 6" and smaller. Provide worm gear operators with external position indication for valves 8" and larger.

2.4 SWING CHECK VALVES:

A. 3" and smaller: Bronze body, sweat or threaded ends, Y-pattern, regrindable bronze seat, renewable bronze disc, Class 125, suitable for installation in a horizontal or vertical line with flow upward. Hammond UP904, Milwaukee UP509, Nibco S413-Y-LF, Watts LFCV, Apollo equal.
B. 4" and larger: Cast iron body, flanged ends, bronze trim, bolted cap, renewable bronze seat and disc, Class 125, non-asbestos gasket, suitable for installation in a horizontal or vertical line with flow upward. Hammond IR 1124, Milwaukee F2974, Nibco F918B, Watts Series 411, Apollo equal.

2.5 SPRING LOADED CHECK VALVES:

A. 2" and smaller: Bronze body, sweat or threaded ends, bronze trim, stainless steel spring, stainless steel center guide pin, Class 125, teflon seat unless only bronze available. ConBraCo 61 series, Nibco S480-Y-LF, Watts LF600 or equal.
B. 2-1/2" and larger: Cast or ductile iron body, wafer or globe type, bronze trim, bronze or EPDM seat, stainless steel spring, stainless steel stem if stem is required, Class 125. Hammond IR9253 or IR9354, Milwaukee 1400 or 1800 series, Nibco W910-LF or F910-LF.

2.6 BALANCE VALVES:

A. 2" and smaller: Brass body, 304 stainless steel ball, sweat or threaded ends, glass filled teflon seat, brass readout valves with EPT checks, with adjustable memory stop position indicator and extended handle stem, suitable for 300 psig water working pressure at 200 degrees F. B&G Xylem Circuit Setter Plus CB1SLF/CB-1LF, or equal by Nibco, Red and White Valve or Watts.

2.7 DRAIN VALVES:

A. 3/4 inch ball valve with integral threaded hose adapter, sweat or threaded inlet connections, with threaded cap and chain on hose threads, Apollo 70LF-200-HC, Milwaukee BA-100H or BA-150H Hammond 8501H or 8511H or equal by Nibco, or Watts.

2.8 BURIED WATER SERVICE GATE VALVES:

A. Cast iron body, resilient elastomer coated cast iron disc, permanently lubricated stuffing box, bronze non-rising stem and stem nut, double O-ring stem seal, Delrin thrust bearings, electroplated nuts and bolts, cast iron operating nut, AWWA C509, rated for 200 psi. Coat valve inside and out with fusion bonded epoxy, AWWA C550. Clow F-6100, Kennedy 1571, Mueller A-2360, Waterous 500, Watts 406RW.

2.9 UNDERGROUND WATER SERVICE BUTTERFLY VALVES:

A. Rubber-seated butterfly valve meeting the requirements of AWWA C504, for Class 150B. Body and disc shall be constructed of cast iron. Disc shall be lens shaped.
B. Interior and exterior surfaces of valve shall be provided with epoxy coating meeting the requirements of AWWA C550. Disc shall be provided with a stainless steel disc edge.
C. Valve stem shall be stainless steel. Packing shall be permanent duty “chevron V-type” or “O-ring” type. Bearings shall be permanent, non-metallic, and self-lubricating.
D. Valve seat shall be a single piece of elastomeric material that is not penetrated by the valve shaft.
E. Provide manual operator that is suitable for underground service and includes a standard 2” square operating nut.
F. Valve shall be provided with mechanical joint connections.
G. Mueller, Clow, Henry Pratt, or approved equal.

2.10 CORPORATION STOP VALVES:

A. 2" and smaller: Bronze body ground key valve, bronze plug, AWWA taper thread inlet and copper flare outlet nut connections or compression type, AWWA C800.

2.11 CURB STOP VALVES:

A. 2" and smaller: Bronze body plug valve, bronze plug, quarter turn check, O-ring seals, copper flare nut connections or compression type, AWWA C800.

2.12 PURE WATER VALVES

A. DIAPHRAGM VALVES:
1. 2" smaller, polypropylene type 1 homopolymer construction ASTM D-4101 and D-2146, butt fusion or spigot ends, rated 150 psi at 68 deg. F, PTFE/Teflon diaphragm seals with EDPM backing, wheel handle operated. George Fischer type 315 or equal.
2. 2-1/2" thru 4", polypropylene type 1 homopolymer construction ASTM D-4101 and D-2146, flanged connections, rated at 150 psi at 68 deg. F, PTFE/Teflon diaphragm seals with EDPM backing, wheel handle operated. George Fischer type 317 or equal.

B. CHECK VALVES:

1. 2" and smaller, three piece body, ball check type, polypropylene type 1 homopolymer construction ASTM D-4101 and D-2146, fusion socket, rated 150 psi at 68 deg. F. George Fischer type 360 or equal.

2. Polypropylene valves, unions, flanges, fittings to be constructed of same materials as pipe and fittings and compatible with the piping installed in the system.

2.13 WASTE SYSTEM VALVES

A. GATE VALVES:
1. 2-1/2" and larger: Iron body, bronze trim, bolted bonnet, O.S. & Y., solid wedge, flanged, suitable for 200 psi WOG. Crane 465-1/2, Hammond IR1140, Lunkenheimer 1430, Milwaukee F2885, Nibco F617-O, Powell 1793, Stockham G623.
B. BALL VALVES:
1. 3" and smaller: Two piece bronze body; sweat or threaded ends, chrome plated bronze ball; glass filled teflon seat; teflon packing and threaded packing nut; blowout-proof stem; 400 psig WOG. Apollo 70-200, Milwaukee BA150, Nibco S585-70, Watts B-6001.

C. SWING CHECK VALVES:

1. 1-1/2" and smaller: Bronze body, threaded ends, Y-pattern, regrindable bronze seat, renewable bronze disc, Class 125, suitable for installation in a horizontal or vertical line with flow upward. Crane 1342, Hammond IB941, Nibco S413B, Watts CVYS.
2. 2" and larger: Cast iron body, flanged ends, bronze trim, bolted cap, renewable bronze seat and disc, Class 125, non-asbestos gasket, outside lever and weight or spring, suitable for installation in a horizontal or vertical line with flow upward. Crane 383, Milwaukee F2974, Nibco F918B.

D. SPRING LOADED CHECK VALVES:
1. 2" and smaller: Bronze body, sweat or threaded ends, bronze trim, stainless steel spring, stainless steel center guide pin, Class 125, teflon seat unless only bronze available. ConBraCo 61 series, Mueller 203BP, Nibco S480Y, Val-Matic S1400 series.
2. 2-1/2" and larger: Cast or ductile iron body, wafer or globe type, bronze trim, bronze or EPDM seat, stainless steel spring, stainless steel stem if stem is required, Class 125. APCO 300 or 600 series, Centerline CLC with full body option, Hammond IR9354, Milwaukee 1800 series, Mueller Steam 101AP or 105AP, Nibco W910 or F910, Val-Matic 1400 or 1800 or 8000 series.

2.14 NATURAL GAS SYSTEMS

A. PRESSURE REDUCING VALVES:
. Bronze or aluminum body and trim, diaphragm or balanced piston, 250 psig maximum, 0-125 psig adjustable output, internal relief, 1/4" outlet gauge tapping.

2.15 SPECIALTY VALVES AND VALVE ACCESSORIES

A. GAUGE VALVES:

1. Use 1/4" ball valves. Needle valves and gauge cocks will not be accepted.

2.16 WATER PRESSURE REDUCING VALVES:

A. Bronze body, diaphragm operated, with an integral thermal expansion bypass valve, inlet union, stainless steel strainer, renewable monel or stainless steel seat and adjustable reduced pressure range, 300 psig at 160 degrees F. Pre-set for the scheduled pressure. A. W. Cash, Conbraco, Watts, Wilkins.

2.17 SAFETY RELIEF VALVES:

A. Bronze body, temperature and pressure actuated, stainless steel stem and spring, thermostat with non-metallic coating, test lever, suitable for 125 psig water working pressure at 240 degrees F, sized for full BTUH input and operating pressure of equipment, with valve capacity on metal label. For equipment less than or equal to 200,000 BTUH input, provide AGA, UL or ASME listed and labeled valve. Provide ASME listed and labeled valve for larger equipment. Bell & Gossett, A. W. Cash, Conbraco, Watts, Wilkins. Temperature and pressure relief valve shall be sized per AGA rating for BTUH input, Re: SPS 382.40(5)(d).

PART 3 - EXECUTION

3.1 GENERAL

A. Properly align piping before installation of valves. Install and test valves in strict accordance with valve manufacturer's installation recommendations.
B. Do not support weight of piping system on valve ends. Mount valves in locations which allow access for operation, servicing and replacement.
C. Provide valve handle extensions for all valves installed in insulated piping.
D. Install all valves with the stem in the upright or horizontal position. If possible, install butterfly valves with

the stem in the horizontal position. Valves installed with the stems down will not be accepted.

E. Prior to flushing of piping systems, place all valves in the full-open position.

3.2 SHUT-OFF VALVES

A. Install shut-off valves at each piece of equipment, at each branch take-off from mains for isolation or repair and elsewhere as indicated.

3.3 BALANCING VALVES

A. Install where indicated on the drawings and details for balancing of flow in pumped hot water recirculation piping systems.

B. Upon project completion, adjust each valve and set position stop. Balance system to minimum flow in return piping branches needed to maintain even supply water temperature throughout building.

3.4 DRAIN VALVES

A. Provide drain valves for complete drainage of all systems. Locations of drain valves include low points of piping systems, downstream of riser isolation valves, equipment locations specified or detailed, other locations required for drainage of systems and elsewhere as indicated.

3.5 SPRING LOADED CHECK VALVES

A. Install a spring-loaded check valve in each circulating pump discharge line, each clearwater sump pump discharge line and elsewhere as indicated.

3.6 SWING CHECK VALVES

A. Install swing check valves in recirculation branch lines and elsewhere as indicated. Provide weighted swing check valves at sanitary sump pump discharges.

3.7 PRESSURE REDUCING VALVES

A. Provide ball valve and strainer at inlet and ball valve at outlet. Install pressure gauges to indicate inlet and outlet pressure at each pressure reducing valve.

3.8 SAFETY RELIEF VALVES

A. Install relief valves on all pressure vessels and elsewhere as indicated. Inlet and outlet piping connecting to valves must be the same size as valve connections or larger. Pipe discharge to drain where indicated or to floor.

END OF SECTION 22 05 23

SECTION 22 05 53

IDENTIFICATION FOR PLUMBING PIPING AND EQUIPMENT

PART 1 - GENERAL

1.1 RELATED DOCUMENTS

A. Drawings and general provisions of the Contract, including General and Supplementary Conditions and Division 01 Specification Sections, apply to this Section.
B. Section 23 00 00- Special Requirements for Mechanical and Electrical Work shall apply.
C. Section 23 00 50 - "Vibration Isolation and Seismic Restraints for HVAC, Fire Protection, Electrical and Plumbing" shall apply.

1.2 SUMMARY

A. Section Includes:
1. Equipment labels.
2. Pipe labels.
3. Valve tags.
4. Warning tags.

1.3 SUBMITTALS

A. Product Data: For each type of product indicated.
B. Samples: For color, letter style, and graphic representation required for each identification material and device.
C. Equipment Label Schedule: Include a listing of all equipment to be labeled with the proposed content for each label.
D. Valve numbering scheme.
E. Valve Schedules: For each piping system to include in maintenance manuals.

1.4 COORDINATION

A. Coordinate installation of identifying devices with completion of covering and painting of surfaces where devices are to be applied.
B. Coordinate installation of identifying devices with locations of access panels and doors.
C. Install identifying devices before installing acoustical ceilings and similar concealment.

1.5 WORK INCLUDED

A. Furnish and install nameplates, valve tags, valve charts, and pipe markers on all Plumbing equipment, and piping.
B. Provide nameplates with the unit number and service designation on all plumbing equipment.
C. Indicate all valve tag numbers on Record Drawings and submit framed under glass valve tag charts including valve service and location.
D. Install color coded ceiling tacks in acoustical tile ceilings or color coded tape on ceiling grid to identify location of equipment, valves and dampers that require regular maintenance or are part of a life safety system (fire dampers, smoke dampers, sprinkler valves or main isolation valves). Concealed fire protection valves shall be marked by red label triangles (3" equilateral) and circle dots (1" diameter). Triangles shall be placed on the wall nearest the valve with the apex pointing toward the ceiling tile. Dots shall be placed on border of ceiling tile.
E. Provide underground plastic pipe markers 6 to 8 inches below finish grade, directly above buried pipes.
F. Prepare valve charts and frame under glass. All valves and the tag numbers shall be shown on the Record As-Built Drawings.

G. Provide valve computer data base to match chart.
H. Prepare and install exterior protected brass plaques indicating underground service entrances.

PART 2 - PRODUCTS

2.1 GENERAL

A. Acceptable manufactures contingent on compliance with the specification.
1. Seton
2. Brady Corporation
3. Marking Services Incorporated

2.2 EQUIPMENT NAMEPLATES

A. Equipment nameplates shall be 3” x 6” long, 0.02” aluminum with a black enamel background with engraved natural aluminum letters similar to Seton Style 2065-20. Nameplate shall have pressure sensitive taped backing.
B. The nameplate shall contain the unit or equipment designation (“AHU” for air handling unit, “P” for circulating pump, etc.), unit number and area or system served.
C. Nameplates for exterior equipment shall be applied with waterproof adhesive.

2.3 PIPE IDENTIFICATION AND VALVE TAGS

A. All piping, except that piping which is within inaccessible chases, shall be identified with semi-rigid plastic identification markers equal to Seton Setmark pipe markers.
1. Direction of flow arrows are to be included on each marker.
2. Each marker background shall be appropriately color coded with a clearly printed legend to identify the contents of the pipe in conformance with the “Scheme for the Identification of Piping Systems” (ASME A13.1-1981).
3. Setmark snap-around markers shall be used for overall diameters up to 6” and strap-around markers shall be used above 6” overall diameters.
4. Markers shall be located:
a. Adjacent to each valve
b. At each branch
c. At each cap for future
d. At each riser takeoff,
e. At each pipe passage through wall (each side)
f. At each pipe passage at 20’ – 0” intervals maximum.
g. At each piece of equipment.
h. At all access doors.
i. A minimum of one (1) marker shall be provided at each room.
5. Underground pipe markers:
a. Provide detectable tape on all underground piping:
b. Labels shall be color coded and labeled the same as indoors.
B. Valve tags
1. All valves shall be designated by distinguishing numbers and letters carefully coordinated with a valve chart. Valve tags shall include what room(s) the valve serves and piece of equipment served.
2. Valve tags shall be color coded 0.032” anodized aluminum tags, with engraved letters similar to Seton S Type 250-BL or approved equal.
a. HVAC tags shall be round 2” diameter, similar to Seton 15426.
b. Plumbing tags shall be square 2” x 2” similar to Seton 42769.
c. Fire Protection tags shall be square 2” x 2” similar to Seton 42769 RED.
d. Lettering shall be ¼” high for type service and ½” for valve number. Tag shall indicate service and valve number.

e. Each service shall be a different color.
3. Tag shall be attached to valves with chain similar to Seton No 16 stainless steel jack chain.
4. Whenever a valve is above a hung ceiling, the valve tag shall be located immediately above the hung ceiling.
5. Provide a tag for every valve except:
a. Perimeter radiation shut-off valves that are located at the finned tube radiation element within the accessible (from the space) heating enclosure

C. Furnish a minimum of two (2) typed valve lists
1. Each framed under glass or Plexiglas. Each chart shall be enclosed in an approved 0.015” thick plastic closure for permanent protection.
2. Valve numbers shall correspond to those indicated on the Record Drawings and on the printed valve lists.
3. The printed list shall include the valve number, location and purpose of each valve.
4. valve when one valve is to be opened or closed.
5. Printed framed valve lists shall be displayed in each Mechanical Room or in a location designated by Owner.

D. Valve data base.
1. Provide a valve data base for all valves to operate on the building computer.
2. Every valve shall include:
a. Tag Number
b. Service (Hot water, Chilled water, Sprinkler, etc.)
c. Size
d. Operation
e. Location
f. Manufacture
g. Model number
h. Submittal reference

2.4 UTILITY ENTRANCE DESIGNATIONS

A. Provide a brass wall plaque, minimum 0.020” thickness, secured to the exterior wall just above the grade line for all buried service entrances or exits. Samples are: Water Service Below; Gas Service Below; Sanitary Sewer Below; Storm Sewer Below; Irrigation Water Below; etc.
B. Ceiling Tacks or Tape.
C. Provide steel color coded 3/4 inch diameter ceiling tacks in acoustical tile ceilings or color coded tape applied to ceiling grid to locate equipment, valves or dampers that require regular maintenance or are part of a Life Safety System.
D. The tacks or tapes shall be color codes as follows:
1. Yellow – HVAC
2. Red – Life Safety (fire dampers, sprinkler valves, etc.)
3. Green - Plumbing Valves.
4. Blue – Heating/Cooling Valves.

PART 3 - EXECUTION

3.1 PREPARATION

A. All surfaces shall be cleaned and insulated (if applicable) prior to installing any identification.
B. Exterior surfaces of outdoor equipment shall be dry and prepared to accept the specified identification.

3.2 INSTALLATION

A. Install nameplates with corrosive-resistant mechanical fasteners, or adhesive. Apply with sufficient adhesive to ensure permanent adhesion. Seal with clear lacquer.
B. Install valve tags with chain.

C. Install plastic pipe markers in accordance with manufacturer's Instructions.
D. Install plastic tape markers complete around pipe in accordance with manufacturer's instructions.
E. Install underground plastic pipe markers 6 to 8 inches below finished grade, directly above buried pipe.
F. Identify air handling units, pumps, domestic hot water heaters, fire pumps, heat transfer equipment tanks, water treatment devices, etc. with plastic nameplates. Small devices, such as in-line pumps, may be identified with tags.
G. Identify control panels and major control components outside panels with plastic nameplates.
H. Install detector tape on all underground services in accordance with the manufacturer's recommendations.
I. Identify thermostats relating to air handling equipment serving multiple spaces.
J. Identify valves in main and branch piping with valve tags.
K. Tag automatic controls, instruments and relays. Key to control schematic.
L. Identify piping, concealed or exposed, with pipe markers or where buried using plastic tape pipe markers. Use tags on piping ¾ inch diameter and smaller. Identify service, flow direction and pressure. Install in clear view and align with axis of piping. Locate identification not to exceed 20 feet on straight runs including risers and drops, adjacent to each valve and Tee, at each side of penetration of structure or enclosure, and at each obstruction.

END OF SECTION 22 05 53

SECTION 22 11 18

DOMESTIC WATER DISTRIBUTION SYSTEM

PART 1 - GENERAL

1.1 RELATED DOCUMENTS

A. Drawings and general provisions of the Contract, including General and Supplementary Conditions and Division 01 Specification Sections, apply to this Section.
B. Section 23 00 00- Special Requirements for Mechanical and Electrical Work shall apply.
C. Section 23 00 50 - "Vibration Isolation and Seismic Restraints for HVAC, Fire Protection, Electrical and Plumbing" shall apply.

1.2 SUMMARY

A. Section Includes:
1. Under-building slab supply, and aboveground domestic water supply and recirculation pipes, tubes, fittings, and certain specialties inside the building and as coordinated with the related work of Division 33.
2. Flexible connectors.
3. Piping encasement.
4. Water meters.
5. Application of valves.

B. Related Sections:
1. Division 33 Section "Facility Water Distribution Piping" for water-service piping outside the building from the source to a point 1’-0” above finished floor or 1’-0” inside the exterior wall of the building as shown on the drawings.
2. Division 22 0523 "General Duty Valves for Plumbing Piping"
3. Section 22 2114 "Plumbing Specialties."
4. Section 22 4000 "Plumbing Fixtures."
5. Section 22 4500 "Plumbing Equipment."

1.3 SUBMITTALS

A. Product Data: For each type of product indicated.
B. Field quality-control reports.

1.4 INFORMATIONAL SUBMITTALS

A. For any systems requiring State code pre-approval, provide letters from the State for same.
B. Documentation that proposed products meet California Health and Safety Code 116875 (AB 1953) -2010, for 25% low lead content of piping, pipe fittings, and faucets for water intended for human consumption.
C. Water tests: After system completion, provide water tests for proof of compliance with the Authority Having Jurisdiction.

1.5 QUALITY ASSURANCE

A. Piping materials shall bear label, stamp, or other markings of specified testing agency.
B. Comply with California Health and Safety Code 116875 (AB 1953) -2010, for 25% low lead content of piping, pipe fittings, and faucets for water intended for human consumption, and NSF/ANSI Standard 61, including Annex G-2010 -Drinking Water System Components -Low Lead Content Requirement.
C. To assure uniformity and compatibility of piping components in grooved end piping systems, all grooved products utilized shall be supplied by the same manufacturer.
D. All grooved couplings shall be installed strictly according to grooved manufacturer’s instructions including

torque verification and specific lubrication as published.

E. Flexible connectors shall be installed according to the manufacturer's instructions, with any adjacent special pipe support/guiding required.

F. Comply with FM Global requirements for cross connections, and for any pressure reducing valves for fire protection service.

1.6 SPECIAL WARRANTIES

A. Five (5) years, see Division 01 for more information.

PART 2 - PRODUCTS

2.1 PIPING MATERIALS

A. Comply with requirements in "Piping Schedule" Article for applications of pipe, tube, fitting materials, and joining methods for specific services, service locations, and pipe sizes.

2.2 COPPER TUBE AND FITTINGS

A. Hard Copper Tube: ASTM B 88, Type L water tube, drawn temper.
1. Cast-Copper Solder-Joint Fittings: ASME B16.18, pressure fittings.
2. Wrought-Copper Solder-Joint Fittings: ASME B16.22, wrought-copper pressure fittings.
3. Bronze Flanges: ASME B16.24, Class 150, with solder-joint ends.
4. Copper Unions: MSS SP-123, cast-copper-alloy, hexagonal-stock body, with ball-andsocket, metal-to-metal seating surfaces, and solder-joint or threaded ends.
5. Grooved-End Copper Fittings: ASTM B 75 copper tube, or ASTM B 152 wrought copper, with copper tubing sized grooved ends designed to accept grooved couplings. Flaring of tube and fitting ends to IPS dimensions is not permitted.
6. Grooved-End-Tube Couplings: Rigid pattern, unless otherwise indicated; gasketed fitting. Ductile-iron housing with keys matching pipe and fitting grooves: 2” through 8”: Installation ready rigid coupling with Grade EHP/EPDM gaskets (unless noted otherwise herein) rated for maximum 250 deg F for use with housing, and steel bolts and nuts. Victaulic Style 607.
7. Grooved-End-Tube Mechanical Tube Fittings: Copper-tube dimensions and design similar to AWWA C606. Bronze upper housing and copper-colored enamel coated ductile iron lower housing, threaded outlet and locating collar, EPDM synthetic rubber gasket suit able for hot and cold water, and bolts and nuts. Victaulic Style 622.
8. Soldering of piping and fittings greater than 2” is not allowed. These joints and connections must be brazed or grooved.

2.3 DUCTILE-IRON PIPE AND FITTINGS (For 3" and Larger Pipe Sizes)

A. Mechanical-Joint, Ductile-Iron Pipe:
1. AWWA C151/A21.51, with mechanical-joint bell and plain spigot end unless grooved or flanged ends are indicated.
2. Glands, Gaskets, and Bolts: AWWA C111/A21.11, ductile-or gray-iron glands, rubber gaskets, and steel bolts.

B. Standard-Pattern, Mechanical-Joint Fittings:
1. AWWA C110/A21.10, ductile or gray iron.
2. Glands, Gaskets, and Bolts: AWWA C111/A21.11, ductile-or gray-iron glands, rubber gaskets, and steel bolts.

C. Compact-Pattern, Mechanical-Joint Fittings:
1. AWWA C153/A21.53, ductile iron.
2. Glands, Gaskets, and Bolts: AWWA C111/A21.11, ductile-or gray-iron glands, rubber gaskets, and steel bolts.

D. Plain-End, Ductile-Iron Pipe: AWWA C151/A21.51.

2.4 PIPING JOINING MATERIALS

A. Pipe-Flange Gasket Materials: AWWA C110, rubber, flat face, 1/8 inch thick or ASME B16.21, nonmetallic and asbestos free, unless otherwise indicated; full-face or ring type unless otherwise indicated.
B. Metal, Pipe-Flange Bolts and Nuts: ASME B18.2.1, carbon steel unless otherwise indicated.
C. Solder Filler Metals: ASTM B 32, lead-free alloys. Include water-flushable flux according to ASTM B 813. Shall be Lead free NSF/ANSI 61 compliant.
D. Brazing Filler Metals: AWS A5.8/A5.8M, BCuP Series, copper-phosphorus alloys for general-duty brazing unless otherwise indicated. Shall be Lead free NSF/ANSI 61 compliant.
E. Flux: ASTM B 813, water flushable.
F. Pipe Thread Tape: Food grade commercial duty pipe thread sealant tape only.

2.5 TRANSITION FITTINGS

A. Fitting-Type Transition Couplings: Manufactured piping coupling or specified piping system fitting.
B. Sleeve-Type Transition Coupling: AWWA C219.

2.6 DIELECTRIC FITTINGS

A. General Requirements: Assembly of copper alloy and ferrous materials or ferrous material body with separating nonconductive insulating material suitable for system fluid, pressure, and temperature.
B. Dielectric Flanges:
   1. Description:
      a. Factory-fabricated, bolted, companion-flange assembly.
      b. Pressure Rating: 150 psig.
      c. End Connections: Solder-joint copper alloy and threaded ferrous; threaded solder-joint copper alloy and threaded ferrous.
C. Dielectric-Flange Kits:
   1. Description:
      a. Nonconducting materials for field assembly of companion flanges.
      b. Pressure Rating: 150 psig.
      c. Gasket: Neoprene or phenolic.
      d. Bolt Sleeves: Phenolic or polyethylene.
      e. Washers: Phenolic with steel backing washers.
D. Dielectric Couplings:
   1. Description:
      a. Galvanized-steel coupling.
      b. Pressure Rating: 300 psig at 225 deg F.
      c. End Connections: Female threaded.
      d. Lining: Inert and noncorrosive, thermoplastic.
E. Dielectric Nipples:
   1. Description:
      a. Electroplated steel nipple complying with ASTM F 1545.
      b. Pressure Rating: 300 psig at 225 deg F.
      c. End Connections: Male threaded or grooved.
      d. Lining: Inert and noncorrosive, propylene.

2.7 FLEXIBLE CONNECTORS

A. Bronze-Hose Flexible Connectors: Corrugated-bronze tubing with bronze wire-braid covering and ends brazed to inner tubing.
   1. Working-Pressure Rating: Minimum 200 psig (1380 kPa).
   2. End Connections NPS 2 (DN 50) and Smaller: Threaded copper pipe or plain-end copper tube.
   3. End Connections NPS 2-1/2 (DN 65) and Larger: Flanged copper alloy.

B. Stainless-Steel-Hose Flexible Connectors: Corrugated-stainless-steel tubing with stainless-steel wire-braid covering and ends welded to inner tubing.
   1. Working-Pressure Rating: Minimum 200 psig (1380 kPa).
   2. End Connections NPS 2 (DN 50) and Smaller: Threaded stainless steel pipe nipple.
   3. End Connections NPS 2-1/2 (DN 65) and Larger: Flanged stainless steel pipe nipple.

C. Manufacturers: Subject to compliance with requirements, provide products by one of the following:
   1. Flex-Hose.
   2. Flexicraft.
   3. Hyspan.
   4. Flex Precision.

2.8 WATER METERS

A. Water meter type to be as indicated on the drawings, and they must meet VEOLIA requirements.
B. Coordinate directly with VEOLIA for specific information and responsibilities.

PART 3 - EXECUTION

3.1 EARTHWORK

A. Comply with requirements in Division 31 2000 Section "Earth Moving" for excavating, trenching, and backfilling.

3.2 PIPING INSTALLATION

A. Drawing plans, schematics, and diagrams indicate general location and arrangement of domestic water piping and related components. Indicated locations and arrangements are used to size pipe and calculate friction loss, expansion, and other design considerations. Install piping as indicated unless deviations to layout are approved on Coordination Drawings.
B. Install copper tubing under building slab according to CDA's "Copper Tube Handbook" and no joints allowed under slabs.
C. The maximum developed length of 1/2" diameter piping shall be 10'.
D. Install ductile-iron piping under building slab with restrained joints according to AWWA C600 and AWWA M41.
E. Install underground pipe according to ASTM A 674 or AWWA C105/A21.5.
F. No joints or fittings in lines below floors after the facility water entry assembly.
G. Install shutoff valve, hose-end drain valve, strainer, pressure gage, and test tee with valve, inside the building at each domestic water service entrance. Comply with requirements in Division 22 Section "Meters and Gages for Plumbing Piping" for pressure gages and Division 22 Section "Plumbing Specialties" for drain valves and strainers.
H. Install shutoff valve immediately upstream of each dielectric fitting.
I. Install domestic water piping level and plumb.
J. Rough-in domestic water piping for water-meter installation according to utility company's requirements.
K. Install piping concealed from view and protected from physical contact by building occupants unless otherwise indicated and except in equipment rooms and service areas.
L. Install piping indicated to be exposed and piping in equipment rooms and service areas at right angles or parallel to building walls. Diagonal runs are prohibited unless specifically indicated otherwise.
M. Install piping above accessible ceilings to allow sufficient space for ceiling panel removal, and coordinate with other services occupying that space.
N. Install piping adjacent to equipment and specialties to allow service and maintenance.
O. Install piping to permit valve servicing.
P. Install nipples, unions, special fittings, and valves with pressure ratings the same as or higher than system pressure rating used in applications below unless otherwise indicated.
Q. Install piping free of sags and bends.

R. Install fittings for changes in direction and branch connections.
S. Install unions in copper tubing at final connection to each piece of equipment, machine, and specialty.
T. Provide proper access to components and work that require inspection, repair, service, or maintenance.
U. No piping or mechanical equipment with a fluid shall be routed over electrical busway housings or spaces sensitive to water damage.
V. Install pressure gages on suction and discharge piping from each plumbing pump and packaged booster pump. Comply with requirements in Division 22 Section "Meters and Gages for Plumbing Piping" for pressure gages.
W. Install thermometers on inlet and outlet piping from each water heater. Comply with requirements in Division 22 Section "Meters and Gages for Plumbing Piping" for thermometers.
X. Install sleeves for piping penetrations of walls, ceilings, and floors. Comply with requirements for sleeves specified in Division 22 Section "Common Work Results for Plumbing."
Y. Install sleeve seals for piping penetrations of concrete walls and slabs. Comply with requirements for sleeve seals specified in Division 22 Section "Common Work Results for Plumbing."
Z. Install escutcheons for piping penetrations of walls, ceilings, and floors.

AA. When a two-inch diameter or greater water service enters a building, install two backflow preventers side by side. Provide full-service size backflow preventers and install them so that one may be shut off without interrupting the flow of domestic water to the building.
BB. Install piping so that there is a minimal amount of stagnant water conditions. Route branch lines for showers and safety equipment so that water is constantly circulating.
CC. Install ball valves, balancing valves, check valves, etc. in the direction of the water flow.

3.3 JOINT CONSTRUCTION

A. Ream ends of pipes and tubes and remove burrs. Bevel plain ends of steel pipe.
B. Remove scale, slag, dirt, and debris from inside and outside of pipes, tubes, and fittings before assembly.
C. Threaded Joints: Thread pipe with tapered pipe threads according to ASME B1.20.1. Cut threads full and clean using sharp dies. Ream threaded pipe ends to remove burrs and restore full ID. Join pipe fittings and valves as follows:
   1 Apply appropriate tape or thread compound to external pipe threads.
   2 Damaged Threads: Do not use pipe or pipe fittings with threads that are corroded or damaged.
D. Brazed Joints, Join copper tube and fittings according to CDA's "Copper Tube Handbook," "Brazed Joints" Chapter. Shall be Lead free NSF/ANSI 61 compliant
E. Soldered Joints: Apply ASTM B 813, water-flushable flux to end of tube. Join copper tube and fittings according to ASTM B 828 or CDA's "Copper Tube Handbook." Shall be Lead free NSF/ANSI 61 compliant.
F. Joint Construction for Grooved-End Copper Tubing: Make joints according to AWWA C606. Roll groove ends of tubes. Lubricate and install gasket over ends of tubes or tube and fitting. Install coupling housing sections over gasket with keys seated in tubing grooves. Install and tighten housing bolts.
G. Joint Construction for Grooved-End, Ductile-Iron Piping: Make radius cut joints according to AWWA C606. Cut round-bottom grooves in ends of pipe at gasket-seat dimension required for specified (flexible or rigid) joint. Lubricate and install gasket over ends of pipes or pipe and fitting. Install coupling housing sections over gasket with keys seated in piping grooves. Install and tighten housing bolts.
H. Flanged Joints: Select appropriate asbestos-free, nonmetallic gasket material in size, type, and thickness suitable for domestic water service. Join flanges with gasket and bolts according to ASME B31.9.
I. Dissimilar-Material Piping Joints: Make joints using adapters compatible with materials of both piping systems.
J. Grooved Joints for Copper Piping: Roll grooves in ends of pipe based on pipe and coupling manufacturer's written instructions for pipe wall thickness. The gasket style and elastomeric material (grade) shall be verified as suitable for the intended service as specified. Grooved end shall be clean and free from indentations, projections, and roll marks in the area from pipe end to groove. A representative shall provide on-site training for contractor's field personnel. Contractor shall remove and replace any improperly installed products.

3.4 VALVE INSTALLATION

A. General-Duty Valves: Comply with requirements in Division 22 Section "General-Duty Valves for Plumbing Piping" for valve installations. Shall be Lead free NSF/ANSI 61 compliant.
B. Install shutoff valve close to water main on each branch and riser serving plumbing fixtures or equipment, on each water supply to equipment, and on each water supply to plumbing fixtures that do not have supply stops. Use ball valves for piping NPS 2 and smaller. Use OS&Y or NRS gate valves for piping NPS 2-1/2 and larger.
C. Install drain valves for equipment at base of each water riser, at low points in horizontal piping, and where required to drain water piping. Drain valves are specified in Division 22 Section "Domestic Water Piping Specialties."

3.5 TRANSITION FITTING INSTALLATION

A. Install transition couplings at joints of dissimilar piping.
B. Transition Fittings in Aboveground Domestic Water Piping NPS 2 and Smaller: Plastic-to-metal transition [**fittings**][**or**][**unions**].
C. Transition Fittings in Underground Domestic Water Piping:
NPS 1-1/2 and Smaller: Fitting-type coupling.
NPS 2 and Larger: Sleeve-type coupling.

3.6 DIELECTRIC FITTING INSTALLATION

A. Install dielectric fittings in piping at connections of dissimilar metal piping and tubing. Shall be Lead free NSF/ANSI 61 compliant.
B. Dielectric Fittings for NPS 2 and Smaller: Use dielectric couplings or nipples.
C. Dielectric Fittings for NPS 2-1/2 to NPS 4: Use dielectric flanges.
D. Dielectric Fittings for NPS 5 to NPS 6: Use dielectric flange kits.

3.7 FLEXIBLE CONNECTOR INSTALLATION

A. Install flexible connectors in suction and discharge piping connections to each domestic water pump and in suction and discharge manifold connections to each domestic water booster pump.
B. Install bronze-hose flexible connectors in copper domestic water tubing.
C. Install stainless-steel-hose flexible connectors in non-copper domestic water piping.

3.8 WATER METER INSTALLATION
A. Rough-in domestic water piping, and install water meter as indicated on the drawings according to AWWA M6 and the utility company's requirements.
B. Install water meters with shutoff valves on water-meter inlet and outlet. Provide a valved bypass around meter only if required by the utility company. Support meters, valves, and piping on brick or concrete piers.

3.9 HANGER AND SUPPORT INSTALLATION

A. Comply with requirements in Division 22 Section "Hangers and Supports for Plumbing Piping and Equipment" for pipe hanger and support products and installation.
1. Vertical Piping: MSS Type 8 or 42, clamps.
2. Individual, Straight, Horizontal Piping Runs:
a. 100 Feet and Less: MSS Type 1, adjustable, steel clevis hangers.
b. Longer Than 100 Feet: MSS Type 43, adjustable roller hangers.
3. Base of Vertical Piping: MSS Type 52, spring hangers.
B. Support vertical piping and tubing at base and at each floor.
C. Rod diameter may be reduced one size for double-rod hangers, to a minimum of 3/8 inch.
D. Install hangers for copper tubing with the following maximum horizontal spacing and minimum rod diameters:

1 NPS 3/4 and Smaller: 60 inches with 3/8-inch rod.
2 NPS 1 and NPS 1-1/4: 72 inches with 3/8-inch rod.
3 NPS 1-1/2 and NPS 2: 96 inches with 3/8-inch rod.
4 NPS 2-1/2: 108 inches with 1/2-inch rod.
5 NPS 3 to NPS 5: 10 feet with 1/2-inch rod.
6 NPS 6: 10 feet with 5/8-inch rod.

E. Install supports for vertical copper tubing every 10 feet.

F. Install hangers for ductile iron piping with the following maximum horizontal spacing and minimum rod diameters:
1 NPS 3: 12 feet with 1/2-inch rod.
2 NPS 4: 12 feet with 5/8-inch rod.
3 NPS 6: 12 feet with 3/4-inch rod.
4 NPS 8 and Larger: 12 feet with 3/4-inch rod.

G. Install supports for vertical ductile iron piping every 15 feet.

3.10 CONNECTIONS

A. Drawings indicate general arrangement of piping, fittings, and specialties.

B. Install piping adjacent to equipment and machines to allow service and maintenance.

C. Connect domestic water piping to water-service piping at a point 1’-0” above finished floor or 1’0” inside the exterior wall, as shown on the drawings, with a shutoff valve using a transition fitting to join dissimilar piping materials then extend and connect to the following:
1 Water Heaters: Cold-water inlet and hot-water outlet piping in sizes indicated, but not smaller than sizes of water heater connections.
2 Plumbing Fixtures: Cold-and hot-water supply piping in sizes indicated, but not smaller than required by plumbing code. Comply with requirements in Division 22 plumbing fixture Sections for connection sizes.
3 Equipment: Cold-and hot-water supply piping as indicated, but not smaller than equipment connections. Provide shutoff valve and union for each connection. Use flanges instead of unions for NPS 2-1/2 and larger.

3.11 IDENTIFICATION

A. Identify system components. Comply with requirements in Division 22 Section "Identification for Plumbing Piping and Equipment" for identification materials and installation.

B. Label pressure piping with system operating pressure.

3.12 FIELD QUALITY CONTROL

A. Perform tests and inspections.

B. Piping Inspections:
1. Schedule inspections with FMO periodically to correspond to completion of floors or zones or areas to allow timely review.
2. Do not enclose, cover, or put piping into operation until it has been inspected and approved by authorities having jurisdiction, FMDC and FMO.
3. During installation, notify authorities having jurisdiction at least one day before inspection must be made. Perform tests specified below in presence of authorities having jurisdiction:
a. Roughing-in Inspection: Arrange for inspection of piping before concealing or closing-in after roughing-in and before setting fixtures.
b. Final Inspection: Arrange final inspection for authorities having jurisdiction to observe tests specified below and to ensure compliance with requirements.
4. Re-inspection: If authorities having jurisdiction find that piping will not pass tests or inspections, make required corrections and arrange for re-inspection.
5. Reports: Prepare inspection reports and have them signed by authorities having jurisdiction.

C. Piping Tests:
1 Fill domestic. Check components to determine that they are not air bound and that piping is full of water.
2 Test for leaks and defects in new piping and parts of existing piping that have been altered, extended, or repaired. If testing is performed in segments, submit a separate report for each test, complete with diagram of portion of piping tested.
3 Leave new, altered, extended, or replaced domestic water piping uncovered and unconcealed until it has been tested and approved. Expose work that was covered or concealed before it was tested.
4 Cap and subject piping to static water pressure of 50 psig above operating pressure, minimum of 100 psi, without exceeding pressure rating of piping system materials. Isolate test source and allow to stand for four hours. Leaks and loss in test pressure constitute defects that must be repaired.
5 Repair leaks and defects with new materials and retest piping or portion thereof until satisfactory results are obtained.
6 Prepare reports for tests and for corrective action required.
7 Following approved testing, thoroughly flush water systems to ensure piping is free of debris and contaminants.

D. Domestic piping will be considered defective if it does not pass tests and inspections.

E. Prepare test and inspection reports.

3.13 ADJUSTING

A. Perform the following adjustments before operation:
1. Close drain valves, hydrants, and hose bibbs.
2. Open shutoff valves to fully open position.
3. Open throttling valves to proper setting.
4. Adjust balancing valves in hot-water-circulation return piping to provide adequate flow.
   a. Manually adjust ball-type balancing valves in hot-water-circulation return piping to provide hot-water flow in each branch.
   b. Adjust calibrated balancing valves to flows indicated.
5. Remove plugs used during testing of piping and for temporary sealing of piping during installation.
6. Remove and clean strainer screens. Close drain valves and replace drain plugs.
7. Remove filter cartridges from housings and verify that cartridges are as specified for application where used and are clean and ready for use.
8. Check plumbing specialties and verify proper settings, adjustments, and operation.

3.14 CLEANING

A. Clean and disinfect potable domestic water piping as follows (and in accordance with local code and jurisdiction):
1. Purge new piping and parts of existing piping that have been altered, extended, or repaired before using.
2. Use purging and disinfecting procedures prescribed by authorities having jurisdiction; if methods are not prescribed, use procedures described in either AWWA C651 or AWWA C652 or follow procedures described below:
   a. Flush piping system with clean, potable water until dirty water does not appear at outlets.
   b. Fill and isolate system according to either of the following:
      1) Fill system or part thereof with water/chlorine solution with at least 50 ppm of chlorine. Isolate with valves and allow to stand for 24 hours.
      2) Fill system or part thereof with water/chlorine solution with at least 200 ppm of chlorine. Isolate and allow to stand for three hours.
   c. Flush system with clean, potable water until no chlorine is in water coming from system after the standing time.
   d. Submit water samples in sterile bottles to authorities having jurisdiction. Repeat procedures if biological examination shows contamination.

B. Prepare and submit reports of purging and disinfecting activities.
C. Clean interior of domestic water piping system. Remove dirt and debris as work progresses.

3.15 PIPING SCHEDULE

A. Transition and special fittings with pressure ratings at least equal to piping rating may be used in applications below unless otherwise indicated.
B. Flanges and unions may be used for aboveground piping joints unless otherwise indicated.
C. Under-building-slab, domestic water piping, NPS 2 1/2 and smaller, shall be the following:
   1. Soft copper tube, ASTM B 88, Type K; no joints allowed under floor slabs.
D. Under-building-slab, domestic water piping, NPS 3 and larger, shall be the following:
   1. Ductile Iron; with ductile iron fittings, and mechanical joints.
E. Aboveground domestic water piping, NPS 2 and smaller, shall be the following:
   1. Hard copper tube, ASTM B 88, Type L; cast or wrought copper solder-joint fittings; and soldered joints. Shall be Lead Free NSF/ANSI 61 compliant.
F. Aboveground domestic water piping, NPS 2 1/2, shall be one of the following:
   1. Hard copper tube, ASTM B 88, Type L; cast or wrought copper braze joint fittings; and brazed joints. Shall be Lead Free NSF/ANSI 61 compliant.
   2. Hard copper tube, ASTM B 88, Type L; grooved, with matching fittings; and roll grooved joints. Shall be Lead Free NSF/ANSI 61 compliant.
G. Aboveground domestic water piping, NPS 3 and 4, shall be one of the following:
   1. Hard copper tube, ASTM B 88, Type L; cast or wrought copper braze-joint fittings; and brazed joints. Shall be Lead Free NSF/ANSI 61 compliant.
   2. Hard copper tube, ASTM B 88, Type L; grooved, with matching fittings; and roll grooved joints. Shall be Lead Free NSF/ANSI 61 compliant.
H. Aboveground domestic water piping, NPS 6 and Larger, shall be the following:
   1. Hard copper tube, ASTM B 88, Type L; cast or wrought copper braze-joint fittings; and brazed joints. Shall be Lead Free NSF/ANSI 61 compliant.
   2. Hard copper tube, ASTM B 88, Type L; grooved, with matching fittings; and roll grooved joints. Shall be Lead Free NSF/ANSI 61 compliant

3.16 VALVE SCHEDULE (Including Access to Same)

A. Drawings indicate valve types to be used. Where specific valve types are not indicated, the following requirements apply:

   1. Shutoff Duty: Use ball valves for piping NPS 2 and smaller. Use OS&Y or NRS gate valves or ball valves with flanged ends for piping NPS 2-1/2 and larger (ball valves only to 3"). Shall be Lead Free NSF/ANSI 61 compliant.
   2. Throttling Duty: Use gate valves for piping NPS 2 and smaller. Shall be Lead Free NSF/ANSI 61 compliant.
   3. Hot-Water Circulation Piping, Balancing Duty: Memory-stop balancing valves.
   4. Drain Duty: Hose-end drain valves. Shall be Lead Free NSF/ANSI 61 compliant.

   5. Faucets and fixtures, such as emergency showers, eyewashes, dishwashers, and autoclaves, shall have local shutoff valves within 5' of the faucet/fixture. Valves must be readily accessible. Shall be Lead Free NSF/ANSI 61 compliant.
   6. Shut-off isolation valves shall be provided on every branch line no more than 18" off of the main lines or risers. Additional shut-off isolation valves may be needed further down the branch lines also, and are to be provided to the satisfaction of the University. Shall be Lead Free NSF/ANSI 61 compliant.
   7. Locate shut off valves outside or directly inside every space that requires water for research. Locate shut off valves for restricted access spaces immediately outside the space.
   8. Provide shut off valves for each space to allow water shut off in that space without interrupting water service to any other space.
   9. When a water line is fed from a floor above or below, provide an accessible shutoff valve on both floors. The supply stop for a fixture is not considered a shut off valve.

B. Iron grooved-end valves may be used with grooved-end piping. Shall be Lead Free NSF/ANSI 61 compliant. Install grooved valves that are full port or greater than the size of the piping in which it is installed.

C. Access panels shall be provided for any plumbing valves that may be in walls or in-accessible ceilings. Access panels shall be a minimum of 12" x 12".

D. For valves located behind an access panel, locate the valve within twelve inches (1’-0”) of the opening of the access panel.

E. Locate all shutoff valves so that they are accessible from a standard A-frame ladder. This includes valves above ceiling access panels, or any ceiling finish material. Use of an extension ladder or lift is not acceptable. Exceptions must be approved in advance by NU Facilities Management.

END OF SECTION 22 11 18

SECTION 22 11 19

PLUMBING SPECIALTIES

PART 1 - GENERAL

1.1 SCOPE

A. This section includes specifications for drains, cleanouts, backflow preventers, water hammer arrestors and other miscellaneous plumbing specialties.

1.2 RELATED DOCUMENTS

A. Drawings and general provisions of the Contract, including General and Supplementary Conditions and Division 01 Specification Sections, apply to this Section.
B. Section 23 00 00- Special Requirements for Mechanical and Electrical Work shall apply.
C. Section 23 00 50 - "Vibration Isolation and Seismic Restraints for HVAC, Fire Protection, Electrical and Plumbing" shall apply.

1.3 REFERENCE

A. Applicable provisions of Division 1 shall govern work under this section.

1.4 REFERENCE STANDARDS

ANSI A112.14.1 - Backwater Valves
ANSI A112.21.1 - Floor Drains.
ANSI A112.21.2 - Roof Drains.
ANSI A112.26.1/PDI WH-201 - Water Hammer Arrestors.
ASSE 1001 - Pipe Applied Atmospheric Type Vacuum Breakers.
ASSE 1010 - Water Hammer Arrestors.
ASSE 1011 - Hose Connection Vacuum Breakers.
ASSE 1012 - Backflow Preventers with Intermediate Atmospheric Vent.
ASSE 1013 - Reduced Pressure Principle Backflow Preventers.
ASSE 1018 - Trap Seal Primer Valves.
ASSE 1019 - Wall Hydrants, Frost Proof Automatic Draining, Anti-Backflow Type.

1.5 QUALITY ASSURANCE

A. Substitution of Materials: Refer to Section GC - General Conditions of the Contract, Equals and Substitutions.
B. Plumbing products requiring approval by the State of Wisconsin Dept. of Safety and Professional Services must be approved or have pending approval at the time of shop drawing submission.

1.6 SHOP DRAWINGS

A. Include data concerning dimensions, capacities, materials of construction, ratings, certifications, weights, manufacturer's installation requirements, manufacturer's performance limitations, and appropriate identification.

1.7 OPERATION AND MAINTENANCE DATA

A. All operations and maintenance data shall comply with the submission and content requirements specified under section GENERAL REQUIREMENTS.

PART 2 – PRODUCTS

2.1 FLOOR DRAINS

A. Manufacturer: Josam, Smith, Wade, Watts, Zurn.
B. Trap Guards
1. Manufacturer: ProSet Systems Trap Guard, JR Smith Quad Close, Sure Seal or approved equal.
2. Flexible elastomeric PVC construction diaphragm trap guard for installation in new and existing floor drains, hub drains, and trench drains. Trap guard to prevent trap evaporation and waste backflow. Size as applicable to the drain outlet size, up to 4” size.

2.2 HUB DRAINS

A. Manufacturer: Josam, Smith, Wade, Watts, Zurn.

2.3 ROOF DRAINS

A. Manufacturer: Josam, Smith, Wade, Watts, Zurn.

2.4 CLEANOUTS

A. Manufacturer: Josam, Smith, Wade, Watts, Zurn.

1. INTERIOR CONCRETE FLOOR AREAS: Enameled cast iron body with round or square adjustable scoriated polished nickel bronze cover, tapered threaded ABS closure plug. Zurn ZN-1400- / ZN-1400-T.
2. INTERIOR CERAMIC TILE FLOOR AREAS: Enameled cast iron body with square adjustable scoriated nickel bronze cover, tapered threaded ABS closure plug. Zurn ZN-1400-T.
3. INTERIOR VINYL TILE FLOOR AREAS: Enameled cast iron body with round adjustable scoriated nickel bronze cover, tapered threaded ABS closure plug. Zurn ZN-1400.
4. INTERIOR CARPETED FLOOR AREAS: Enameled cast iron body with round adjustable scoriated nickel bronze cover and secured carpet marker, tapered threaded ABS closure plug. Zurn Z-1400-CM.
5. INTERIOR FINISHED WALL AREAS: Line type cleanout tee with tapered threaded ABS cleanout plug, round polished stainless steel access cover secured with machine screw. Zurn Z-1446-
(Note: Screw shall not pass completely through the ABS plug, trim screw as necessary)
6. INTERIOR EXPOSED VERTICAL STACKS: Line type cleanout tee with tapered threaded ABS closure plug. Zurn Z-1445.
7. INTERIOR HORIZONTAL LINES: Cast iron hub with tapped ferrule and tapered threaded ABS or PVC closure plug, or no-hub coupling and blind plug.
8. EXTERIOR PAVED AREAS: Cast iron hub or plug with tapered threaded ABS or PVC closure plug, cast iron frost sleeve and cover set in 24" square by 4" min. thick reinforced concrete pad top or surrounding pavement, crowned for drainage. Neenah R-1976 with non-ferrous securing screw.
9. EXTERIOR UNPAVED AREAS: Cast iron hub or plug with tapered threaded ABS or PVC closure plug, cast iron or PVC frost sleeve and cover set in 24” square by 4” min. thick reinforced concrete pad top. Neenah R-1976 with non-ferrous securing screw.

2.5 BACKWATER VALVES

A. Manufacturers:, Josam 67500, Smith 7012, Watts BV-200, Zurn Z1090.
B. Hub and spigot or No-Hub inlet and outlet cast iron body, cast iron gasketed bolted access cover, bronze valve. Flapper to hang in closed position during non-operation period.

2.6 WATER HAMMER ARRESTORS

A. Manufacturer: PPP Industries, Sioux Chief, Wade, Watts.
B. ANSI A112.26.1, ASSE 1010; sized in accordance with PDI WH-201, precharged piston type constructed of hard drawn Type K copper, threaded brass adapter, brass piston with o-ring seals, FDA approved silicone lubricant, suitable for operation in temperature range 35 to 150 degrees F, maximum 250 psig working pressure, 1500 psig surge pressure. Watts series 15.

2.7 BACKFLOW PREVENTERS

A. Manufacturers: Beeco, Cla-Val, Conbraco, Febco, Watts, Wilkins.

2.8 HOSE CONNECTION VACUUM BREAKERS:

A. ASSE 1011, brass or bronze construction, EPDM diaphragm and seat, rated for 125 psig and 180°F. Watts 8 (interior application).

2.9 REDUCED PRESSURE ZONE BACKFLOW PREVENTERS:

ASSE 1013 reduced pressure zone backflow assembly complete with inlet strainer, inlet and outlet ball or non-rising stem gate isolation valves. Size for maximum pressure drop of __ psig at __ GPM. Constructed of bronze or epoxy coated cast iron body with bronze and plastic internal parts, stainless steel springs, non-threaded vent outlet, 4 test cocks, rated for 175 psig and 210°F, with air gap apparatus on drain. Watts series 919-S-QT-AG, Wilkins #975 or approved equal.

2.10 WALL HYDRANTS

A. Manufacturer: Josam, Smith, Wade, Watts, Woodford, Zurn.
B. Freezeproof automatic draining wall hydrant with exposed chrome plated bronze wall plate, 3/4" inlet, 3/4" hose thread ASSE 1019-93 backflow preventer outlet, copper or bronze casing, loose key operator. Woodford model 65 series

2.11 HOSE BIBBS

A. Bronze or brass construction hose faucet/valve, cast iron handwheel, replaceable disc, hose thread spout, with ASSE 1011 backflow preventer outlet, 3/4” size. Watts model SC-8-3.

2.12 TRAP PRIMER VALVES

A. Manufacturers: Ancon, PPP Industries, Smith, Watts.
B. Bronze body, O-ring seals, integral threaded outlet vacuum breaker, adjustable, in conformance with ANSI/ASSE 1018. PPP model P-1/P-2.

2.13 WASHING MACHINE WALL BOXES

A. Manufacturers: Guy Gray, Oatey.
B. Epoxy paint coated steel recessed wall box with face flange, overflow lip, fastening tabs, 1/2" hot and cold bronze washing machine ¼ turn shutoff valves rated for 125 psi and 180 degrees F, long shank valve fittings for replacement of valves within box, 2" drain outlet fitting. Oatey no 38934.

PART 3 - EXECUTION

3.1 INSTALLATION
A. Coordinate location and setting of plumbing specialties with adjacent construction. Install in accordance with manufacturers recommendations.

B. Set floor drains, roof drains, trench drains and cleanouts level and plumb adjusted to finished floor elevation, roof elevation or finished wall location. Locate where serviceable. Allow minimum of 18" clearance around cleanouts for rodding. Lubricate threaded cleanout plugs with graphite and oil, teflon tape or waterproof grease. Install trap primer connections where indicated. Provide deep seal traps on floor drains and hub drains installed in mechanical rooms, penthouses or rooms with excessive positive or negative pressure.

C. Floor drains and hub drains installed in public restrooms, locker rooms, seldom used rooms, and areas with minute drainage flow shall have installations of combination trap evaporation/backflow preventer diaphragm installations.

D. Set backwater valves on undisturbed soil or compacted granular backfill, level and plumb with top adjusted to finished floor elevation. Test and adjust valve for proper operation. Allow minimum 18" clearance for servicing.

E. Install water hammer arrestors at quick closing valve installations.

F. Install backflow preventers in accordance with project requirements maintaining minimum clearance distances for servicing and testing. Provide indirect waste piping with air gap installation from relief opening to above hub drain or floor drain.

G. Mount wall hydrants recessed in exterior wall construction with valve plug extended beyond interior side of building insulation. Slope to drain to exterior. Install so discharge is 18” min. above finished grade. Set wall box in grout or caulk and fill exterior wall penetration with insulation.

H. Mount hose bibbs securely fastened to wall where indicated. Provide water hammer arrestor in line to hose bibb.

I. Install washing machine boxes in wall construction, secured to structure, directly behind proposed washing machine location. Provide water hammer arrestors in supply piping. Mount box a min. of 36” above floor.

END OF SECTION 22 11 19

SECTION 22 13 16 - SANITARY WASTE AND VENT PIPING

PART 1 -GENERAL

1.1 RELATED DOCUMENTS

A. Drawings and general provisions of the Contract, including General and Supplementary Conditions and Division 01 Specification Sections, apply to this Section.
B. Section 23 00 00- Special Requirements for Mechanical and Electrical Work shall apply.
C. Section 23 00 50 - "Vibration Isolation and Seismic Restraints for HVAC, Fire Protection, Electrical and Plumbing" shall apply.

1.2 SUMMARY

A. This Section includes sanitary drainage inside the building up to a point 5’-0” outside the building and vent piping inside the building including:
1 Pipe and fittings.
2 Special pipe fittings.

1.3 PERFORMANCE REQUIREMENTS

A. Components and installation shall be capable of withstanding the following minimum working pressure, unless otherwise indicated:
1. Soil, Waste, and Vent Piping: 10-foot head of water.

1.4 SUBMITTALS

A. Field quality-control inspection and test reports.

1.5 QUALITY ASSURANCE

A. Piping materials shall bear label, stamp, or other markings of specified testing agency.
B. Comply with NSF 14, "Plastics Piping Systems Components and Related Materials," for plastic piping components. Include marking with "NSF-DWV" for plastic drain, waste, and vent piping; and "NSF-drain" for plastic drain piping.

1.6 FIELD CONDITIONS

A. Interruption of Existing Sanitary Waste Service: Do not interrupt service to facilities occupied by Owner or others unless permitted under the following conditions and then only after arranging to provide temporary service according to requirements indicated:

PART 2 - PRODUCTS

2.1 PIPING MATERIALS

A. Hub-and-Spigot, Cast-Iron Pipe and Fittings: ASTM A 74, Service class.
1. Gaskets: ASTM C 564, rubber.
B. Hubless Cast-Iron Pipe and Fittings: ASTM A 888 or CISPI 301.
1. Shielded Couplings: ASTM C 1277 assembly of metal shield or housing, corrosion-resistant fasteners, and rubber sleeve with integral, center pipe stop.
a. Standard, Shielded, Stainless-Steel Couplings: CISPI 310, with stainless-steel corrugated shield; stainless-steel bands and tightening devices; and ASTM C 564, rubber sleeve.

b. Heavy-Duty, Shielded, Stainless-Steel Couplings: With stainless-steel shield, stainless-steel bands and tightening devices, and ASTM C 564, rubber sleeve.

C. Schedule 40 PVC Pipe: ASTM D 2665, solid-wall drain, waste, and vent.
1. PVC Socket Fittings: ASTM D 2665, socket type, made to ASTM D 3311, drain, waste, and vent patterns.
2. Solvent Cement and Adhesive Primer:
a. Use PVC solvent cement that has a VOC content of 510 g/L or less when calculated according to 40 CFR 59, Subpart D (EPA Method 24).
b. Use adhesive primer that has a VOC content of 550 g/L or less when calculated according to 40 CFR 59, Subpart D (EPA Method 24).

D. Steel Pipe: ASTM A 53/A 53M, Type E or S, Grade A or B, Schedule 40, galvanized. Include ends matching joining method.
1. Drainage Fittings: ASME B16.12, galvanized, threaded, cast-iron drainage pattern.
2. Pressure Fittings:
a. Steel Pipe Nipples: ASTM A 733, made of ASTM A 53/A 53M or ASTM A 106, Schedule 40, galvanized, seamless steel pipe. Include ends matching joining method.
b. Malleable-Iron Unions: ASME B16.39; Class 150; hexagonal-stock body with balland-socket, metal-to-metal, bronze seating surface; and female threaded ends.
c. Gray-Iron, Threaded Fittings: ASME B16.4, Class 125, galvanized, standard pattern.
d. Cast-Iron Flanges: ASME B16.1, Class 125.
e. Cast-Iron, Flanged Fittings: ASME B16.1, Class 125, galvanized.

E. CPVC Drainage Pipe and Fittings: ASTM F 2618 pipe and drainage-pattern fittings.
1. Acceptable Manufacturers: Charlotte Chemdrain (Basis of Design)
2. Solvent Cement for Joining CPVC Piping: ASTM F 493. Include primer according to ASTM F 656.

PART 3 -EXECUTION

3.1 EXCAVATION

A. Refer to Division 31 Section “Earth Moving” for excavating, trenching, and backfilling.

3.2 PIPING APPLICATIONS

A. Special pipe fittings with pressure ratings at least equal to piping pressure ratings may be used in applications below, unless otherwise indicated.
B. Flanges and unions may be used on aboveground pressure piping, unless otherwise indicated.
C. Aboveground Horizontal and vertical waste and vent piping shall be:
1. Hubless cast-iron soil pipe and fittings; standard, shielded, stainless-steel couplings; and hubless-coupling joints.
D. Above ground vertical waste/vent risers shall be “Sovent”.

E. Underground, soil, waste, and vent piping shall be:
1. Service class, hub-and-spigot, cast-iron soil pipe and fittings; gaskets; and compression joints.
F. Sewage pump or sump pump discharge piping shall be one of the following:
1. Solid-wall Schedule 40 PVC pipe, PVC socket fittings, and solvent-cemented joints.
2. Schedule 40 galvanized steel pipe with screwed galvanized cat iron drainage fittings.
3. Copper tubing Type L, soldered or brazed joints
G. Single-Wall, Chemical-Waste Sewerage Piping: Use the following piping materials for each size range:
1. NPS 1-1/2 to NPS 4 (DN 40 to DN 100): CPVC drainage pipe and fittings and solvent-cemented joints.
J. PVC piping may **not** be installed in a return air plenum for any of the above piping applications unless piping is completely insulated in fire retardant insulation rated for return air plenums.

3.3 PIPING INSTALLATION

A. Site sanitary sewer piping to a point 5’-0” outside the building is specified in Division 33 Section "Facility Sanitary Sewers."

B. Basic piping installation requirements are specified in Division 22 Section "Common Work Results for Plumbing."
C. Install cast-iron soil piping according to CISPI's "Cast Iron Soil Pipe and Fittings Handbook," Chapter IV, "Installation of Cast Iron Soil Pipe and Fittings."
D. Install CPVC drainage piping according to ASTM D 2321 and ASTM F 1668.
E. Make changes in direction for soil and waste drainage and vent piping using appropriate branches, bends, and long-sweep bends. Sanitary tees and short-sweep 1/4 bends may be used on vertical stacks if change in direction of flow is from horizontal to vertical. Use long-turn, double Y-branch and 1/8-bend fittings if 2 fixtures are installed back to back or side by side with common drain pipe. Straight tees, elbows, and crosses may be used on vent lines. Do not change direction of flow more than 90 degrees. Use proper size of standard increasers and reducers if pipes of different sizes are connected. Reducing size of drainage piping in direction of flow is prohibited.
F. Lay buried building drainage piping beginning at low point of each system. Install true to grades and alignment indicated, with unbroken continuity of invert. Place hub ends of piping upstream. Install required gaskets according to manufacturer's written instructions for use of lubricants, cements, and other installation requirements. Maintain swab in piping and pull past each joint as completed.
G. Install soil and waste drainage and vent piping at the following minimum slopes, unless otherwise indicated:
   1 Sanitary Drains: 2 percent downward in direction of flow for piping NPS 2 and 1 percent downward in direction of flow for piping NPS 3 and larger.
   2 Vent Piping: Slope toward vertical fixture vent or toward vent stack.
H. Sleeves are not required for cast-iron soil piping passing through concrete slabs-on-grade if slab is without membrane waterproofing.
I. Install PVC soil and waste drainage and vent piping according to ASTM D 2665 and ASTM D 2321.
J. Do not enclose, cover, or put piping into operation until it is inspected and approved by authorities having jurisdiction.
K. Install sleeves for piping penetrations of walls, ceilings, and floors. Comply with requirements for sleeves specified in Division 22 Section "Common Work Results for Plumbing".
L. Install sleeve seals for piping penetrations of concrete walls and slabs. Comply with requirements for sleeve seals specified in Division 22 Section "Common Work Results for Plumbing".
M. Install escutcheons for piping penetrations of walls, ceilings, and floors. Comply with requirements for escutcheons.
O. Install SE Sovent (SESCO) Tite-Ruff system in accordance to Design manual 101/o and follow piping recommendations for Low Flow water closets and clothes washing machine wastes. See other specification section for supports, hangers, fire rated pipe penetrations and related DWV requirements

3.4 VALVE INSTALLATION

A. General-duty valves are specified in Division 22 Section "General-Duty Valves for Plumbing Piping."
B. Shutoff Valves: Install shutoff valve on each sewage pump or sump pump discharge.
C. Check Valves: Install swing check valve, downstream from shutoff valve, on each sewage pump or sump pump discharge.

3.5 JOINT CONSTRUCTION

A. Basic piping joint construction requirements are specified in Division 22 Section "Common Work Results for Plumbing."
B. Cast-Iron, Soil-Piping Joints: Make joints according to CISPI's "Cast Iron Soil Pipe and Fittings Handbook," Chapter IV, "Installation of Cast Iron Soil Pipe and Fittings."
   1 Gasketed Joints: Make with rubber gasket matching class of pipe and fittings.
   2 Hubless Joints: Make with rubber gasket and sleeve or clamp.
C. PVC Nonpressure Piping Joints: Join piping according to ASTM D 2665.

3.6 HANGER AND SUPPORT INSTALLATION

A. Pipe hangers and supports are specified in Division 22 Section "Hangers and Supports for Plumbing Piping and Equipment." Install the following:

1. Vertical Piping: MSS Type 8 or Type 42, clamps.
2. Individual, Straight, Horizontal Piping Runs: According to the following:
   a. 100 Feet and Less: MSS Type 1, adjustable, steel clevis hangers.
   b. Longer Than 100 Feet: MSS Type 43, adjustable roller hangers.
   c. Longer Than 100 Feet, if Indicated: MSS Type 49, spring cushion rolls.
3. Multiple, Straight, Horizontal Piping Runs 100 Feet or Longer: MSS Type 44, pipe rolls. Support pipe rolls on trapeze.
4. Base of Vertical Piping: MSS Type 52, spring hangers.

B. Install supports according to Division 22 Section "Hangers and Supports for Plumbing Piping and Equipment."
C. Support vertical piping and tubing at base and at each floor.
D. Install piping hangers and rod diameters per MSS-SP-69
E. Install supports for vertical cast-iron soil piping every 15 feet.
F. Install supports for vertical steel piping every 15 feet.
G. Install supports for vertical CPVC piping every 48 inches.
H. Install supports for vertical PVC piping every 48 inches.
I. Support piping and tubing according to MSS SP-69 and manufacturer's written instructions.

3.7 CONNECTIONS

A. Connect soil and waste piping to exterior sanitary sewerage piping. Use transition fitting to join dissimilar piping materials.
B. Connect drainage and vent piping to the following:
   1 Plumbing Fixtures: Connect drainage piping in sizes indicated, but not smaller than required by plumbing code. Refer to Division 22 Section "Sanitary Waste Piping Specialties."
   2 Plumbing Fixtures and Equipment: Connect atmospheric vent piping in sizes indicated, but not smaller than required by authorities having jurisdiction.
   3 Plumbing Specialties: Connect drainage and vent piping in sizes indicated, but not smaller than required by plumbing code. Refer to Division 22 Section "Sanitary Waste Piping Specialties."
   4 Equipment: Connect drainage piping or pump discharge piping as indicated. Provide shutoff valve, if indicated, and union for each connection. Use flanges instead of unions for connections NPS 2-1/2 and larger.

3.8 FIELD QUALITY CONTROL

A. During installation, notify authorities having jurisdiction at least 24 hours before inspection must be made. Perform tests specified below in presence of authorities having jurisdiction.
   1 Roughing-in Inspection: Arrange for inspection of piping before concealing or closing-in after roughing-in and before setting fixtures. Inspections shall be made by FMO plumbing staff prior to closing-in of walls.
   2 Final Inspection: Arrange for final inspection by authorities having jurisdiction to observe tests specified below and to ensure compliance with requirements.
B. Re-inspection: If authorities having jurisdiction find that piping will not pass test or inspection, make required corrections and arrange for re-inspection.
C. Reports: Prepare inspection reports and have them signed by authorities having jurisdiction.
D. Test sanitary drainage and vent piping according to procedures of authorities having jurisdiction or in absence of published procedures, as follows:
   1 Test for leaks and defects in new piping and parts of existing piping that have been altered, extended, or repaired. If testing is performed in segments, submit separate report for each test, complete with diagram of portion of piping tested.
   2 Leave uncovered and unconcealed new, altered, extended, or replaced drainage piping until it has been tested and approved. Expose work that was covered or concealed before it was tested.
   3 Test Procedure: Test drainage piping on completion of roughing in. Close openings in piping system and fill with water to point of overflow, but not less than 10-foot head of water. From 15 minutes before inspection starts to completion of inspection, water level must not drop. Inspect joints for leaks.

4 Repair leaks and defects with new materials and retest piping, or portion thereof, until satisfactory results are obtained.
5 Prepare reports for tests and required corrective action.

3.9 CLEANING

A. Clean interior of piping. Remove dirt and debris as work progresses.
B. Protect drains during remainder of construction period to avoid clogging with dirt and debris and to prevent damage from traffic and construction work.
C. Place plugs in ends of uncompleted piping at end of day and when work stops.

3.10 PROTECTION

A. Exposed PVC Piping: Protect PVC piping exposed to sunlight with two coats of water-based latex paint.

END OF SECTION 22 13 16

SECTION 22 13 19 - SANITARY WASTE PIPING SPECIALTIES

PART 1 - GENERAL

1.1 RELATED DOCUMENTS

A. Drawings and general provisions of the Contract, including General and Supplementary Conditions and Division 01 Specification Sections, apply to this Section.
B. Section 23 00 00- Special Requirements for Mechanical and Electrical Work shall apply.
C. Section 23 00 50 - "Vibration Isolation and Seismic Restraints for HVAC, Fire Protection, Electrical and Plumbing" shall apply.

1.2 SUMMARY

A. This Section includes the following sanitary drainage piping specialties:
1. Cleanouts.
2. Floor drains.
3. Through penetration firestop assemblies.
4. Roof flashing assemblies.
5. Miscellaneous sanitary drainage piping specialties.
6. Flashing materials.

1.3 SUBMITTALS

A. Product Data: For each type of product indicated. Include rated capacities, operating characteristics, and accessories for grease interceptors.

1.4 QUALITY ASSURANCE

A. Drainage piping specialties shall bear label, stamp, or other markings of specified testing agency.

PART 2 - PRODUCTS

2.1 CLEANOUTS

A. Manufacturers: Subject to compliance with requirements, provide products by one of the following:
1. Josam Company.
2. Smith, Jay R. Mfg. Co.
3. Tyler Pipe; Wade Div.
4. Zurn Plumbing Products Group.

B. Exposed Horizontal Cleanouts, HCO:
1. Standard: ASME A112.36.2M for cast iron for cleanout test tee.
2. Size: Same as connected drainage piping
3. Body Material: Hubless, cast-iron soil pipe test tee as required matching connected piping.

C. Floor Cleanouts, FCO:
1. Standard: ASME A112.36.2M for adjustable housing cleanout.
2. Size: Same as connected branch.
3. Coated cast iron internal gasketed ABS cleanout plug and adjustable ABS housing.
4. Medium-duty scoriated secured round satin finish Nikaloy top.

D. Wall Cleanouts, WCO:
1. Standard: ASME A112.36.2M. Include wall access.
2. Size: Same as connected drainage piping.
3. Round stainless steel wall access cover with screw and no-hub cleanout.

2.2 FLOOR DRAINS

A. Manufacturers: Subject to compliance with requirements, provide products by one of the following:
1. Josam Company.
2. Smith, Jay R. Mfg. Co.
3. Tyler Pipe; Wade Div.
4. Zurn Plumbing Products Group.

2.3 THROUGH-PENETRATION FIRESTOP ASSEMBLIES

A. Through-Penetration Firestop Assemblies:
1. Refer to Firestopping and Fireproofing specifications for requirements.

2.4 ROOF FLASHING ASSEMBLIES

A. Roof Flashing Assemblies: 1. Manufacturers: Subject to compliance with requirements, provide products by one of the following:
a. Acorn Engineering Company; Elmdor/Stoneman Div.
b. Thaler Metal Industries Ltd.

B. Description: Manufactured assembly made of 4.0-lb/sq. ft., 0.0625-inch- thick, lead flashing collar and skirt extending at least 8 inches from pipe, with galvanized-steel boot reinforcement and counterflashing fitting.

2.5 MISCELLANEOUS SANITARY DRAINAGE PIPING SPECIALTIES

A. Deep-Seal Traps:
1. Description: Cast-iron or bronze casting, with inlet and outlet matching connected piping and cleanout trap-seal primer valve connection.
2. Size: Same as connected waste piping.
a. NPS 2: 4-inch- minimum water seal.
b. NPS 2-1/2 and Larger: 5-inch- minimum water seal.

B. Air-Gap Fittings:
1. Standard: ASME A112.1.2, for fitting designed to ensure fixed, positive air gap between installed inlet and outlet piping.
2. Body: Bronze or cast iron.
3. Inlet: Opening in top of body.
4. Outlet: Larger than inlet.
5. Size: Same as connected waste piping and with inlet large enough for associated indirect waste piping.

C. Vent Caps:
1. Description: Cast-iron body with threaded or hub inlet and vandal-proof design. Include vented hood and setscrews to secure to vent pipe.

2.6 FLASHING MATERIALS

A. Lead Sheet: ASTM B 749, Type L51121, copper bearing, with the following minimum weights and thicknesses, unless otherwise indicated:
1. General Use: 4.0-lb/sq. ft., 0.0625-inch thickness.
2. Vent Pipe Flashing: 3.0-lb/sq. ft., 0.0469-inch thickness.
3. B urning: 6-lb/sq. ft., 0.0938-inch thickness.

B. Fasteners: Metal compatible with material and substrate being fastened.

C. Metal Accessories: Sheet metal strips, clamps, anchoring devices, and similar accessory units required for installation; matching or compatible with material being installed.

D. Solder: ASTM B 32, lead-free alloy.

E. Bituminous Coating: SSPC-Paint 12, solvent-type, bituminous mastic.

PART 3 - EXECUTION

3.1 INSTALLATION

A. Refer to Division 22 Section "Common Work Results for Plumbing" for piping joining materials, joint construction, and basic installation requirements.

B. Install cleanouts in aboveground piping and building drain piping according to the following, unless otherwise indicated:
   1. Size same as drainage piping up to NPS 4. Use NPS 4 for larger drainage piping unless larger cleanout is indicated.
   2. Locate at each change in direction of piping greater than 45 degrees.
   3. Locate at minimum intervals of 100 feet.
   4. Locate at base of each vertical soil and waste stack.

C. For floor cleanouts for piping below floors, install cleanout with top flush with finished floor.

D. Floor cleanouts located in concealed piping, install cleanout wall access covers, of types indicated, with frame and cover flush with finished wall.

E. Install floor drains at low points of surface areas to be drained. Set grates of drains flush with finished floor, unless otherwise indicated.
   1. Position floor drains for easy access and maintenance.
   2. Set floor drains below elevation of surrounding finished floor to allow floor drainage. Set with grates depressed according to the following drainage area radii:
      a. Radius, 30 Inches or Less: Equivalent to 1 percent slope, but not less than 1/4-inch total depression.
      b. Radius, 30 to 60 Inches: Equivalent to 1 percent slope.
      c. Radius, 60 Inches or Larger: Equivalent to 1 percent slope, but not greater than 1-inch total depression.
   3. Install floor-drain flashing collar or flange so no leakage occurs between drain and adjoining flooring. Maintain integrity of waterproof membranes where penetrated.
   4. Install individual traps for floor drains connected to sanitary building drain, unless otherwise indicated.

F. Install roof flashing assemblies on sanitary stack vents and vent stacks that extend through roof.

G. Install flashing fittings on sanitary stack vents and vent stacks that extend through roof.

H. Install floor-drain, trap-seal primer fittings on inlet to floor drains that require trap-seal primer connection.
   1. Exception: Fitting may be omitted if trap has trap-seal primer connection.

I. Install air-gap fittings on draining-type backflow preventers and on indirect-waste piping discharge into sanitary drainage system.

3.2 CONNECTIONS

A. Piping installation requirements are specified in other Division 22 Sections. Drawings indicate general arrangement of piping, fittings, and specialties.

B. Install piping adjacent to equipment to allow service and maintenance.

3.3 FLASHING INSTALLATION

A. Fabricate flashing from single piece unless large pans, sumps, or other drainage shapes are required. Join flashing according to the following if required:
   1. Lead Sheets: Burn joints of lead sheets 6.0-lb/sq. ft., 0.0938-inch thickness or thicker. Solder joints of lead sheets 4.0-lb/sq. ft., 0.0625-inch thickness or thinner.

B. Install sheet flashing on pipes, sleeves, and specialties passing through or embedded in floors and roofs with waterproof membrane.

1. Pipe Flashing: Sleeve type, matching pipe size, with minimum length of 10 inches, and skirt or flange extending at least 8 inches around pipe.
2. Sleeve Flashing: Flat sheet, with skirt or flange extending at least 8 inches around sleeve.
3. Embedded Specialty Flashing: Flat sheet, with skirt or flange extending at least 8 inches around specialty.

C. Set flashing on floors and roofs in solid coating of bituminous cement.
D. Secure flashing into sleeve and specialty clamping ring or device.
E. Install flashing for piping passing through roofs with counterflashing or commercially made flashing fittings, according to applicable Division 07 Section.
F. Extend flashing up vent pipe passing through roofs and turn down into pipe, or secure flashing into cast-iron sleeve having calking recess.

3.4 LABELING AND IDENTIFYING

A. Equipment Nameplates and Signs: Install engraved plastic-laminate equipment nameplate or sign on or near each grease interceptor.
B. Distinguish among multiple units, inform operator of operational requirements, indicate safety and emergency precautions, and warn of hazards and improper operations, in addition to identifying unit. Nameplates and signs are specified in Division 22 Section "Identification for Plumbing Piping and Equipment."

3.5 PROTECTION

A. Protect drains during remainder of construction period to avoid clogging with dirt or debris and to prevent damage from traffic or construction work.
B. Place plugs in ends of uncompleted piping at end of each day or when work stops.

END OF SECTION 22 13 19

SECTION 22 14 13 - STORM DRAINAGE PIPING

PART 1 - GENERAL

1.1 RELATED DOCUMENTS

A. Drawings and general provisions of the Contract, including General and Supplementary Conditions and Division 01 Specification Sections, apply to this Section.
B. Section 23 00 00- Special Requirements for Mechanical and Electrical Work shall apply.
C. Section 23 00 50 - "Vibration Isolation and Seismic Restraints for HVAC, Fire Protection, Electrical and Plumbing" shall apply.

1.2 SUMMARY

A. This Section includes storm drainage inside the building up to a point 5’-0” outside the building including:
1. Pipe, tube, and fittings.
2. Special pipe fittings.

1.3 PERFORMANCE REQUIREMENTS

A. Components and installation shall be capable of withstanding the following minimum working pressure, unless otherwise indicated:
1. Storm Drainage Piping: 10-foot head of water.

1.4 SUBMITTALS

A. Field quality-control inspection and test reports.

1.5 QUALITY ASSURANCE

A. Piping materials shall bear label, stamp, or other markings of specified testing agency.
B. Comply with NSF 14, "Plastics Piping Systems Components and Related Materials," for plastic piping components. Include marking with "NSF-drain" for plastic drain piping.

PART 2 - PRODUCTS

2.1 PIPING MATERIALS

A. Hub-and-Spigot, Cast-Iron Pipe and Fittings: ASTM A 74, Service class.
1. Gaskets: ASTM C 564, rubber.
B. Hubless Cast-Iron Pipe and Fittings: ASTM A 888 or CISPI 301.
1. Shielded Couplings: ASTM C 1277 assembly of metal shield or housing, corrosion-resistant fasteners, and rubber sleeve with integral, center pipe stop.
a. Standard, Shielded, Stainless-Steel Couplings: CISPI 310, with stainless-steel corrugated shield ; stainless-steel bands and tightening devices; and ASTM C 564, rubber sleeve.
C. Solid-Wall Schedule 40 PVC Pipe: ASTM D 2665, solid-wall drain, waste, and vent.
1. Schedule 40 PVC Socket Fittings: ASTM D 2665, made to ASTM D 3311, drain, waste, and vent patterns.
2. Solvent Cement and Adhesive Primer:
a. Use PVC solvent cement that has a VOC content of 510 g/L or less when calculated according to 40 CFR 59, Subpart D (EPA Method 24).

b. Use adhesive primer that has a VOC content of 550 g/L or less when calculated according to 40 CFR 59, Subpart D (EPA Method 24).

PART 3 - EXECUTION

3.1 EXCAVATION

A. Refer to Division 31 Section “Earth Moving” for excavating, trenching, and backfilling.

3.2 PIPING APPLICATIONS

A. Special pipe fittings with pressure ratings at least equal to piping pressure ratings may be used in applications below, unless otherwise indicated.
B. Aboveground storm drainage piping shall be:
   1. Hubless cast-iron soil pipe and fittings; standard, shielded, stainless-steel couplings; and coupled joints.
C. Underground storm drainage piping to 5’-0” outside building shall be one of the following:
   1. Service class, cast-iron soil pipe and fittings; gaskets; and gasketed joints.
   2. Solid-wall Schedule 40 PVC pipe, PVC socket fittings, and solvent-cemented joints.

3.3 PIPING INSTALLATION

A. Site storm sewer and piping to a point 5’-0” outside the building is specified in Division 33 Section "Storm Utility Drainage Piping."
B. Basic piping installation requirements are specified in Division 22 Section "Common Work Results for Plumbing."
C. Install cast-iron soil piping according to CISPI's "Cast Iron Soil Pipe and Fittings Handbook," Chapter IV, "Installation of Cast Iron Soil Pipe and Fittings."
D. Make changes in direction for storm piping using appropriate branches, bends, and long-sweep bends. Do not change direction of flow more than 90 degrees. Use proper size of standard increasers and reducers if pipes of different sizes are connected. Reducing size of drainage piping in direction of flow is prohibited.
E. Lay buried building drain piping beginning at low point of each system. Install true to grades and alignment indicated, with unbroken continuity of invert. Place hub ends of piping upstream. Install required gaskets according to manufacturer's written instructions for use of lubricants, cements, and other installation requirements. Maintain swab in piping and pull past each joint as completed.
F. Install storm drainage piping at 1 percent downward in direction of flow.
G. Sleeves are not required for cast-iron soil piping passing through concrete slabs-on-grade if slab is without membrane waterproofing.
H. Install underground PVC storm drainage piping according to ASTM D 2321.
I. Do not enclose, cover, or put piping into operation until it is inspected and approved by authorities having jurisdiction.
J. Install sleeves for piping penetrations of walls, ceilings, and floors. Comply with requirements for sleeves specified in Division 22 Section "Common Work Results for Plumbing”.
K. Install sleeve seals for piping penetrations of concrete walls and slabs. Comply with requirements for sleeve seals specified in Division 22 Section "Common Work Results for Plumbing”.
L. Install escutcheons for piping penetrations of walls, ceilings, and floors. Comply with requirements for escutcheons specified in Division 22 Section "Common Work Results for Plumbing”.
M. Install downspouts in column webs wherever possible.

3.4 JOINT CONSTRUCTION

A. Basic piping joint construction requirements are specified in Division 22 Section "Common Work Results for Plumbing."
B. Hub-and-Spigot, Cast-Iron Soil Piping Gasketed Joints: Join according to CISPI's "Cast Iron Soil Pipe and Fittings Handbook" for compression joints.
C. Hubless Cast-Iron Soil Piping Coupled Joints: Join according to CISPI 310 and CISPI's "Cast Iron Soil Pipe and Fittings Handbook" for hubless-coupling joints.

3.5 HANGER AND SUPPORT INSTALLATION

A. Pipe hangers and supports are specified in Division 22 Section "Hangers and Supports for Plumbing Piping and Equipment." Install the following:
   1. Vertical Piping: MSS Type 8 or Type 42, clamps.
   2. Individual, Straight, Horizontal Piping Runs: According to the following:
      a. 100 Feet and Less: MSS Type 1, adjustable, steel clevis hangers.
      b. Longer Than 100 Feet: MSS Type 43, adjustable roller hangers.
      c. Longer Than 100 Feet, if Indicated: MSS Type 49, spring cushion rolls.
   3. Multiple, Straight, Horizontal Piping Runs 100 Feet or Longer: MSS Type 44, pipe rolls. Support pipe rolls on trapeze.
   4. Base of Vertical Piping: MSS Type 52, spring hangers.

B. Install supports according to Division 22 Section "Hangers and Supports for Plumbing Piping and Equipment."

C. Support vertical piping and tubing at base and at each floor.

D. Rod diameter may be reduced 1 size for double-rod hangers, with 3/8-inch minimum rods.

E. Install supports for vertical cast-iron soil piping every 15 feet.

F. Support piping and tubing not listed above according to MSS SP-69 and manufacturer's written instructions.

3.6 CONNECTIONS

A. Connect interior storm drainage piping to exterior storm drainage piping at a point 5’-0” outside the building. Use transition fitting to join dissimilar piping materials.

B. Connect storm drainage piping to roof drains and storm drainage specialties.

3.7 FIELD QUALITY CONTROL

A. During installation, notify authorities having jurisdiction at least 24 hours before inspection must be made. Perform tests specified below in presence of authorities having jurisdiction.
   1. Roughing-in Inspection: Arrange for inspection of piping before concealing or closing-in after roughing-in.
   2. Final Inspection: Arrange for final inspection by authorities having jurisdiction to observe tests specified below and to ensure compliance with requirements.

B. Reinspection: If authorities having jurisdiction find that piping will not pass test or inspection, make required corrections and arrange for reinspection.

C. Reports: Prepare inspection reports and have them signed by authorities having jurisdiction.

D. Test storm drainage piping according to procedures of authorities having jurisdiction or in absence of published procedures, as follows:
   1. Test for leaks and defects in new piping and parts of existing piping that have been altered, extended, or repaired. If testing is performed in segments, submit separate report for each test, complete with diagram of portion of piping tested.
   2. Leave uncovered and unconcealed new, altered, extended, or replaced drainage piping until it has been tested and approved. Expose work that was covered or concealed before it was tested.
   3. Test Procedure: Test drainage piping on completion of roughing in. Close openings in piping system and fill with water to point of overflow, but not less than 10-foot head of water. From 15 minutes before inspection starts to completion of inspection, water level must not drop. Inspect joints for leaks.
   4. Repair leaks and defects with new materials and retest piping, or portion thereof, until satisfactory results are obtained.
   5. Prepare reports for tests and required corrective action.

3.8 CLEANING

A. Clean interior of piping. Remove dirt and debris as work progresses.
B. Protect drains during remainder of construction period to avoid clogging with dirt and debris and to prevent damage from traffic and construction work.
C. Place plugs in ends of uncompleted piping at end of day and when work stops.

END OF SECTION 22 14 13

SECTION 22 14 23

STORM DRAINAGE PIPING SPECIALTIES

PART 1 - GENERAL

1.1 RELATED DOCUMENTS

A. Drawings and general provisions of the Contract, including General and Supplementary Conditions and Division 01 Specification Sections, apply to this Section.
B. Section 23 00 00 Special Requirements for Mechanical and Electrical Work shall apply.
C. Section 23 00 50 "Vibration Isolation and Seismic Restraints for HVAC, Fire Protection, Electrical and Plumbing" shall apply.

1.2 SUMMARY

A. Section Includes:
1. Roof drains.
2. Deck drains
3. Miscellaneous storm drainage piping specialties.
4. Cleanouts.
5. Flashing materials.

1.3 SUBMITTALS

A. Product Data: For each type of product indicated.

1.4 QUALITY ASSURANCE

A. Drainage piping specialties shall bear label, stamp, or other markings of specified testing agency.

PART 2 - PRODUCTS

2.1 ROOF AND DECK DRAINS

A. Cast-Iron, Large-Sump, General-Purpose Roof Drains:
1. Manufacturers: Subject to compliance with requirements, provide products by one of the following:
a. Josam Company.
b. Smith, Jay R. Mfg. Co.
c. Tyler Pipe; Wade Div.
d. Zurn Plumbing Products Group; Specification Drainage Operation.
2. Standard: ASME A112.6.4, for general-purpose roof drains.
3. Body Material: Cast iron.
4. Dimension of Body: Nominal 15-inch diameter. 5. Combination Flashing Ring and Gravel Stop: Not required.
6. Flow-Control Weirs: Not required.
7. Outlet Location: Bottom.
8. Outlet Size: As indicated on drawings.
9. Extension Collars: Not required.
10. Underdeck Clamp: Required.
11. Expansion Joint: Not required.
12. Dome Material: PE.

2.2 MISCELLANEOUS STORM DRAINAGE PIPING SPECIALTIES

A. Downspout Boots:
1. Description: Manufactured, ASTM A 48/A 48M, gray-iron casting, with strap or ears for attaching to building; 4-inch outlet; and shop-applied bituminous coating.
2. Size: Inlet size to match downspout and 4-inch outlet.

B. Conductor Nozzles for Emergency Drain:
1. Description: Nickel bronze body with threaded inlet and nickel bronze wall flange with mounting holes.
2. Size: Same as connected conductor.

2.3 CLEANOUTS

A. Floor Cleanouts **FCO**:
1. Manufacturers: Subject to compliance with requirements, provide products by one of the following:
   a. Josam Company.
   b. Smith, Jay R. Mfg. Co.
   c. Tyler Pipe; Wade Div.
   d. Zurn Plumbing Products Group; Specification Drainage Operation..
2. Standard: ASME A112.36.2M, for adjustable housing cleanouts.
3. Size: Same as connected branch.
4. Type: Adjustable housing.
5. Body or Ferrule Material: ABS.
6. Clamping Device: Required.
7. Outlet Connection: Inside calk.
8. Closure: Plastic plug.
9. Adjustable Housing Material: ABS Plastic with threads.
10. Frame and Cover Material and Finish: Scoriated Nickel-bronze, copper alloy.
11. Frame and Cover Shape: Round.
12. Top-Loading Classification: Medium Duty.

B. Test Tees:
1. Standard: ASME A112.36.2M and ASTM A 74, ASTM A 888, or CISPI 301, for cleanout test tees.
2. Size: Same as connected drainage piping.
3. Body Material: Hub-and-spigot, cast-iron soil-pipe T-branch or hubless, cast-iron soil-pipe test tee as required to match connected piping.
4. Closure Plug: raised head, brass.
5. Closure Plug Size: Same as or not more than one size smaller than cleanout size.

C. Wall Cleanouts **WCO**:
1. Manufacturers: Subject to compliance with requirements, provide products by one of the following:
   a. Josam Company.
   b. Smith, Jay R. Mfg. Co.
   c. Tyler Pipe; Wade Div.
   d. Zurn Plumbing Products Group; Specification Drainage Operation..
2. Standard: ASME A112.36.2M, for cleanouts. Include wall access.
3. Size: Same as connected drainage piping.
4. Body Material: Hubless, cast-iron soil-pipe test tee as required to match connected piping.
5. Closure: Countersunk, drilled-and-threaded brass plug.
6. Closure Plug Size: Same as or not more than one size smaller than cleanout size.
7. Wall Access: Round, flat, chrome-plated brass or stainless-steel cover plate with screw.

2.4 FLASHING MATERIALS

A. Copper Sheet: ASTM B 152/B 152M, 12 oz./sq. ft..
B. Zinc-Coated Steel Sheet: ASTM A 653/A 653M, with 0.20 percent copper content and 0.04-inch minimum thickness unless otherwise indicated. Include G90 hot-dip galvanized, mill-phosphatized finish for painting if indicated.
C. Elastic Membrane Sheet: ASTM D 4068, flexible, chlorinated polyethylene, 40-mil minimum thickness.
D. Fasteners: Metal compatible with material and substrate being fastened. E. Metal Accessories: Sheet metal strips, clamps, anchoring devices, and similar accessory units required for installation; matching or compatible with material being installed.
F. Solder: ASTM B 32, lead-free alloy.

PART 3 - EXECUTION

3.1 INSTALLATION

A. Install roof drains at low points of roof areas according to roof membrane manufacturer's written installation instructions. Roofing materials are specified in Division 07 Sections.
   1. Install flashing collar or flange of roof drain to prevent leakage between drain and adjoining roofing. Maintain integrity of waterproof membranes where penetrated.
   2. Install expansion joints, if indicated, in roof drain outlets.
   3. Position roof drains for easy access and maintenance.
B. Install downspout boots at grade with top 12 inches above grade. Secure to building wall.
C. Install conductor nozzles at exposed bottom of conductors where they spill onto grade.
D. Install cleanouts in aboveground piping and building drain piping according to the following instructions unless otherwise indicated:
   1. Use cleanouts the same size as drainage piping up to NPS 4. Use NPS 4 for larger drainage piping unless larger cleanout is indicated.
   2. Locate cleanouts at each change in direction of piping greater than 45 degrees.
   3. Locate cleanouts at minimum intervals of 100 feet.
   4. Locate cleanouts at base of each vertical soil and waste stack.
E. For floor cleanouts for piping below floors, install cleanout with top flush with finished floor.
F. For cleanouts located in concealed piping, install cleanout wall access covers, of types indicated, with frame and cover flush with finished wall.
G. Install test tees in vertical conductors and near floor.
H. Install wall cleanouts in vertical conductors. Install access door in wall if indicated.
I. Install sleeve flashing device with each conductor passing through floors with waterproof membrane.

3.2 CONNECTIONS

A. Comply with requirements for piping specified in Division 22 Sections. Drawings indicate general arrangement of piping, fittings, and specialties.

3.3 FLASHING INSTALLATION

A. Fabricate flashing from single piece of metal unless large pans, sumps, or other drainage shapes are required. Join flashing according to the following if required:
   1. Lead Sheets: Burn joints of 6.0-lb/sq. ft. lead sheets, 0.0938-inch thickness or thicker. Solder joints of 4.0-lb/sq. ft. lead sheets, 0.0625-inch thickness or thinner.
   2. Copper Sheets: Solder joints of copper sheets.
B. Install sheet flashing on pipes, sleeves, and specialties passing through or embedded in floors and roofs with waterproof membrane.

1. Pipe Flashing: Sleeve type, matching the pipe size, with a minimum length of 10 inches and with skirt or flange extending at least 8 inches around pipe.
2. Sleeve Flashing: Flat sheet, with skirt or flange extending at least 8 inches around sleeve.
3. Embedded Specialty Flashing: Flat sheet, with skirt or flange extending at least 8 inches around specialty.

C. Set flashing on floors and roofs in solid coating of bituminous cement.
D. Secure flashing into sleeve and specialty clamping ring or device.
E. Fabricate and install flashing and pans, sumps, and other drainage shapes.

3.4 PROTECTION

A. Protect drains during remainder of construction period to avoid clogging with dirt or debris and to prevent damage from traffic or construction work.
B. Place plugs in ends of uncompleted piping at end of each day or when work stops.

END OF SECTION 22 14 23

SECTION 22 59 00 - TESTS

PART 1 - GENERAL

1.1 RELATED DOCUMENTS

A. Drawings and general provisions of contract, including General and Supplementary Conditions and Division 1 Specification sections, apply to work specified in this section.

B. Section 22 00 00 – “Special Requirements for Mechanical and Electrical Work” shall apply.

C. Section 15005 "Vibration Isolation and Seismic Restraints for HVAC, Fire Protection, Electrical and Plumbing" shall apply.

1.2 SCOPE OF WORK

A. The work includes the providing of all labor, materials, accessories, services and tests necessary to install complete and make ready for operation by the Owner, all work as shown on Drawings and as specified hereinafter.

PART 2 - TECHNICAL REQUIREMENTS

2.1 REQUIREMENTS

A. The work of the Contractor shall include the furnishing of all testing instruments, gauges, pumps, and other equipment required for necessary tests, required by laws, rules and regulations and as specified.

B. The Owner and the Architect shall be notified at least 48 hours in advance of all tests and shall be represented at all tests, and all tests shall be conducted to their entire satisfaction.

C. All defects disclosed by tests shall be repaired if permitted by the Architect or replaced without additional cost to the Owner. No caulking on screwed joints, cracks or holes will be acceptable.

D. Tests shall be repeated after defects have been repaired or replaced until all work is approved.

E. All tests shall be made at the expense of the Contractor.

F. Tests are not permitted to be made with air.

G. The Contractor shall provide required test plug tee fittings during erection of piping system.

H. All piping which is to be enclosed in partitions or in hung ceilings shall be tested and made tight when directed by the Architect and in adequate time to permit the installations of partitions and ceilings. When necessary, the Contractor shall drain the piping and/or take other such precautions as required to prevent damage by freezing.

PART 3 - EXECUTION

3.1 DOMESTIC WATER SYSTEMS

A. Domestic cold and hot water systems: The entire water supply shall be tested to a hydrostatic pressure of 150 pounds per square inch and proved tight at this pressure before fixtures are installed. Water supply piping, if in any way concealed by structural work, shall be tested to the aforesaid pressure and proved tight before pipes are concealed.

B. The test pressure shall be held for a period of not less than 60 minutes. The piping system shall be considered tight if the drop in pressure does not exceed 1 pound per square inch during the test period. If the pressure drop exceeds 1 pound, all repairs and alterations in the piping system necessary to meet the tests shall be made.

3.2 SANITARY AND STORM WATER DRAINAGE SYSTEMS

A. Each section of the sanitary, storm and vent piping tested shall have all openings, tightly closed with screw plugs. The drainage and vent systems shall be filled with water and proven tight under a 10'-0" head for a minimum of two (2) hours. Water level must remain constant through test without adding water.

3.3 SPRINKLER SYSTEM

A. Test in accordance with NFPA, State and Local requirements. Test piping with water at least 200 psi at top story outlet for a period of 2 hours.

3.4 GAS SYSTEM

A. Test in accordance with State, Local and Gas Company=s Standards. Test at low pressure for ten (10) minutes without drop with approved mercury gauge. Set at 6 to 10 inches of mercury.

END OF SECTION 22 59 00

SECTION 22 40 00 - PLUMBING FIXTURES

PART 1 - GENERAL

1.1 RELATED DOCUMENTS

A. Drawings and general provisions of the Contract, including General and Supplementary Conditions and Division 01 Specification Sections, apply to this Section.
B. Section 23 00 00- Special Requirements for Mechanical and Electrical Work shall apply.
C. Section 23 00 50 - "Vibration Isolation and Seismic Restraints for HVAC, Fire Protection, Electrical and Plumbing" shall apply.

1.2 SUMMARY

A. This Section includes the following:
1. Faucets for lavatories and showers.
2. Flushometers for water closets and urinals.
3. Toilet seats.
4. Protective shielding guards.
5. Fixture supports.
6. Water closets.
7. Urinals.
8. Water Coolers / Bottle Filling Stations
9. Lavatories.
10. Sinks and sink faucets.
11. Service sinks and faucets.
12. Mop sinks and faucets.
13. Shower cabinets.
14. Shower receptors.

B. Related Sections include the following:
1 Section 22 11 18 "Domestic Water Distribution System."
2 Section 22 21 14 "Plumbing Specialties."

1.3 DEFINITIONS

A. ABS: Acrylonitrile-butadiene-styrene plastic.
B. Accessible Fixture: Plumbing fixture that can be approached, entered, and used by people with disabilities.
C. FRP: Fiberglass-reinforced plastic.
D. PMMA: Polymethyl methacrylate (acrylic) plastic.
E. PVC: Polyvinyl chloride plastic.
F. Solid Surface: Nonporous, homogeneous, cast-polymer-plastic material with heat-, impact-, scratch-, and stain-resistance qualities.

1.4 SUBMITTALS

A. Product Data: For each type of product indicated, and including fixture/item dimensions and rough-in dimensions.
B. Shop Drawings: Diagram power, signal, and control wiring, and for fixture supports and carriers.
C. Operation and maintenance data.
D. At closeout, Northwestern University Maintenance Requirement Forms, see Division 01 for more information.

1.5 QUALITY ASSURANCE

A. Electrical Components, Devices, and Accessories: Listed and labeled as defined in NFPA 70, Article 100, by a testing agency acceptable to authorities having jurisdiction, and marked for intended use.

B. Regulatory Requirements: Comply with requirements in ICC A117.1, "Accessible and Usable Buildings and Facilities"; Public Law 90-480, "Architectural Barriers Act"; and Public Law 101336, "Americans with Disabilities Act"; and Illinois Accessibility Code for plumbing fixtures for people with disabilities.

C. Regulatory Requirements: Comply with requirements in Public Law 102-486, "Energy Policy Act," about water flow and consumption rates for plumbing fixtures.

D. Comply with California Health and Safety Code 116875 (AB 1953) -2010, for 25% low lead content of piping, pipe fittings, and faucets for water intended for human consumption, and NSF/ANSI Standard 61, including Annex G-2010 -Drinking Water System Components -Low Lead Content Requirement.

E. Comply with NSF/ANSI 372 -Low Lead Content Verification Requirement

F. Select combinations of fixtures and trim, faucets, fittings, and other components that are compatible.

G. Comply with the following applicable standards and other requirements specified for plumbing fixtures:
1 Enameled, Cast-Iron Fixtures: ASME A112.19.1M.
2 Stainless-Steel Sinks: ASME A112.19.3.
3 Vitreous-China Fixtures: ASME A112.19.2M.
4 Water-Closet, Flush Valve, Tank Trim: ASME A112.19.5.
5 Water-Closet, Flushometer Tank Trim: ASSE 1037.

H. Comply with the following applicable standards and other requirements specified for lavatory and sink faucets:
1. Backflow Protection Devices for Faucets with Side Spray: ASME A112.18.3M.
2. Backflow Protection Devices for Faucets with Hose-Thread Outlet: ASME A112.18.3M.
3. Diverter Valves for Faucets with Hose Spray: ASSE 1025.
4. Faucets: ASME A112.18.1.
5. Hose-Connection Vacuum Breakers: ASSE 1011.
6. Hose-Coupling Threads: ASME B1.20.7.
7. Integral, Atmospheric Vacuum Breakers: ASSE 1001.
8. NSF Potable-Water Materials: NSF 61.
9. Pipe Threads: ASME B1.20.1.
10. Sensor-Actuated Faucets and Electrical Devices: UL 1951.
11. Supply Fittings: ASME A112.18.1.
12. Brass Waste Fittings: ASME A112.18.2.

I. Comply with the following applicable standards and other requirements specified for shower faucets:
1. Backflow Protection Devices for Hand-Held Showers: ASME A112.18.3M.
2. Combination, Pressure-Equalizing and Thermostatic-Control Antiscald Faucets: ASSE 1016.
3. Faucets: ASME A112.18.1.
4. Hand-Held Showers: ASSE 1014.
5. High-Temperature-Limit Controls for Thermal-Shock-Preventing Devices: ASTM F 445.
6. Hose-Coupling Threads: ASME B1.20.7.
7. Manual-Control Antiscald Faucets: ASTM F 444.
8. Pipe Threads: ASME B1.20.1.
9. Pressure-Equalizing-Control Antiscald Faucets: ASTM F 444 and ASSE 1016 or ASSE 1070.
10. Sensor-Actuated Faucets and Electrical Devices: UL 1951.
11. Thermostatic-Control Antiscald Faucets: ASTM F 444 and ASSE 1016.

J. Comply with the following applicable standards and other requirements specified for miscellaneous fittings:
   1 Atmospheric Vacuum Breakers: ASSE 1001.
   2 Brass and Copper Supplies: ASME A112.18.1.
   3 Manual-Operation Flushometers: ASSE 1037.
   4 Plastic Tubular Fittings: ASTM F 409.
   5 Brass Waste Fittings: ASME A112.18.2.
   6 Sensor-Operation Flushometers: ASSE 1037 and UL 1951.

K. Comply with the following applicable standards and other requirements specified for miscellaneous components:
   1 Flexible Water Connectors: ASME A112.18.6.
   2 Hose-Coupling Threads: ASME B1.20.7.
   3 Off-Floor Fixture Supports: ASME A112.6.1M.
   4 Pipe Threads: ASME B1.20.1.
   5 Plastic Toilet Seats: ANSI Z124.5-2013.
   6 Supply and Drain Protective Shielding Guards: ICC A117.1.

1.6 SPECIAL WARRANTIES
   A. Five (5) years, see Division 01 for more information.

PART 2 -PRODUCTS

2.1 MANUFACTURERS

   A. For flushing fixtures, lavatories, showers, service sinks, and mop sinks specified below, subject to compliance with requirements, provide the products indicated in the Fixture Schedule on the drawings, or a comparable product by one of the following:
      1. Kohler (preferred).
      2. American Standard (acceptable alternate).
      3. Geberit
   B. For water closet and urinal flushometers, subject to compliance with requirements, provide the products indicated in the Fixture Schedule on the drawings, or a comparable product by one of the following:
   1 Moen.
   2 Sloan Valve.

2.2 FIXTURES

   A. Refer to drawings and plans for plumbing fixture schedules and details

PART 3 -EXECUTION

3.1 INSTALLATION

   A. Assemble plumbing fixtures, trim, fittings, and other components according to manufacturers' written instructions.
   B. Install off-floor supports, affixed to building substrate, for wall-mounting fixtures.
      1. Use carrier supports with waste fitting and seal for back-outlet fixtures.
      2. Use carrier supports without waste fitting for fixtures with tubular waste piping.
      3. Use chair-type carrier supports with rectangular steel uprights for accessible fixtures.
   C. Install back-outlet, wall-mounting fixtures onto waste fitting seals and attach to supports.
   D. Install floor-mounting fixtures on closet flanges or other attachments to piping or building substrate.
   E. Install wall-mounting fixtures with tubular waste piping attached to supports.

F. Install fixtures level and plumb according to roughing-in drawings.
G. Install water-supply piping with stop on each supply to each fixture to be connected to water distribution piping. Attach supplies to supports or substrate within pipe spaces behind fixtures. Install stops in locations where they can be easily reached for operation.
H. Install trap and tubular waste piping on drain outlet of each fixture to be directly connected to sanitary drainage system.
I. Install tubular waste piping on drain outlet of each fixture to be indirectly connected to drainage system.
J. Install flushometer valves for accessible water closets and urinals with handle mounted on wide side of compartment. Install other actuators in locations that are easy for people with disabilities to reach.
K. Install tanks for accessible, tank-type water closets with lever handle mounted on wide side of compartment.
L. Install toilet seats on water closets.
M. Install faucet-spout fittings with specified flow rates and patterns in faucet spouts if faucets are not available with required rates and patterns. Include adapters if required.
N. Install water-supply flow-control fittings with specified flow rates in fixture supplies at stop valves.
O. Install faucet flow-control fittings with specified flow rates and patterns in faucet spouts if faucets are not available with required rates and patterns. Include adapters if required.
P. Install shower flow-control fittings with specified maximum flow rates in shower arms.
Q. Install traps on fixture outlets.
   1. Exception: Omit trap on fixtures with integral traps.
   2. Exception: Omit trap on indirect wastes, unless otherwise indicated.
R. Install escutcheons at piping wall and ceiling penetrations in exposed, finished locations and within cabinets and millwork. Use deep-pattern escutcheons if required to conceal protruding fittings. Escutcheons are specified in Division 22 Section "Escutcheons for Plumbing Piping."
S. Seal joints between fixtures and walls, floors, and countertops using sanitary-type, one-part, mildew-resistant silicone sealant. Match sealant color to fixture color.

3.2 CONNECTIONS

A. Piping installation requirements are specified in other Division 22 Sections. Drawings indicate general arrangement of piping, fittings, and specialties.
B. Connect fixtures with water supplies, stops, and risers, and with traps, soil, waste, and vent piping. Use size fittings required to match fixtures.
C. Ground equipment according to Division 26 Section "Grounding and Bonding for Electrical Systems."
D. Connect wiring according to Division 26 Section "Low-Voltage Electrical Power Conductors and Cables."

3.3 FIELD QUALITY CONTROL

A. Verify that installed plumbing fixtures are categories and types specified for locations where installed.
B. Check that plumbing fixtures are complete with trim, faucets, fittings, and other specified components.
C. Inspect installed plumbing fixtures for damage. Replace damaged fixtures and components.
D. Test installed fixtures after water systems are pressurized for proper operation. Replace malfunctioning fixtures and components, then retest. Repeat procedure until units operate properly.
E. Install fresh batteries in sensor-operated mechanisms.

3.4 PROTECTION

A. Provide protective covering for installed fixtures and fittings.
B. Do not allow use of plumbing fixtures for temporary facilities unless approved in writing by Owner.

END OF SECTION 22 40 00

ORANGE & ROCKLAND UTILITIES, INC
SVOC NEW OFFICE ADDITION

Tax Map ID 56.52-1-2
390 West Route 59
Village of Spring Valley
Town of Ramapo
Rockland County, New York

HEATING, VENTILATING AND AIR CONDITIONING
TECHNICAL SPECIFICATIONS

PREPARED BY

OMDEX INCORPORATED CONSULTING ENGINEERS
21 Cross Avenue, Midland Park, NJ 07432-1811, 201-444-0753, FAX 201-444-0839

April 28, 2025 – Issued for Bidding and Building Department Filing

PROFESSIONAL ENGINEER

BRIAN W. PASECHNICK, PE
NY License No. 91385

SECTION 23 00 00

SPECIAL REQUIREMENTS FOR MECHANICAL AND ELECTRICAL WORK

PART 1 – GENERAL

1.1 RELATED DOCUMENTS

A. All of the Project "General Documents" apply to work specified in this Section; consult them in detail for applicable instructions.

B. Manufacturers referenced in the technical specifications are for the purpose of establishing a standard of quality. Alternate manufacturers providing the same quality materials or equipment will be given consideration by the Architect and/or Engineer if they are notified in writing per General Conditions.

C. This Section applies equally and specifically to all Contractors and Subcontractors supplying labor and/or equipment and/or materials as required under the Heating, Ventilating and Air Conditioning, Plumbing, Sprinkler and Electrical Sections of the Specifications.

1.2 DEFINITIONS

A. "The Contractor" or "Each Contractor" means specifically, the Contractor or Subcontractor working under his respective Section (Heating, Ventilating and Air Conditioning, Plumbing, Sprinkler or Electrical) of this Specification.

B. "Piping" includes, in addition to pipe, all fittings, valves, hangers and other accessories related to such piping.

C. "Concealed" means hidden from sight as in chases, furred spaces, shafts, hung ceilings, or embedded in construction.

D. "Exposed" means "not concealed" as defined above. Work in trenches, crawl spaces and tunnels shall be considered "exposed" unless otherwise specifically noted.

E. "HVAC" means Heating, Ventilating and Air Conditioning.

F. "Plumbing Contractor" means the Contractor doing Plumbing Work.

G. “Sprinkler Contractor” means the Contractor doing all the Fire Protection including Sprinkler Work.

1.3 CODES AND STANDARDS

A. 2020 Building Code of New York State
B. International Building Code 2018
C. National Electric Code 2020
D. International Mechanical Code 2018
E. International Plumbing Code 2018
F. ASHRAE 170 and 90.1 Ventilation and Energy Codes
G. ANSI American National Standards Institute
H. ASTM American Society for Testing Materials
I. NEMA National Electrical Manufacturers Association
J. ASHRAE American Society of Heating, Refrigeration and Air Conditioning Engineers
K. SMACNA Sheet Metal and Air Conditioning Contractors National Association, Inc.

L. ARI Air Conditioning and Refrigeration Institute
M. UL Underwriters' Laboratories
N. AMCA Air Moving and Conditioning Association
O. AABC Associated Air Balance Council
P. Local Water Company Rules and Regulations
Q. NFPA 13

1.4 INTENT

A. It is the intention of the Specifications and Drawings to call for finished work, tested and ready for operation. All materials, equipment and apparatus shall be new and of first-class quality.

B. Any apparatus, appliance, material, or work not shown on Drawings, but mentioned in the Specifications, or vice versa, or any incidental accessories, or minor detail not shown but necessary to make the work complete and perfect in all respects and ready for operation, even if not particularly specified, shall be provided without additional expense to the Owner.

1.5 DRAWINGS

A. The Drawings are generally diagrammatic and are intended to convey the scope of work and indicate general arrangement of equipment; ducts, conduits, piping and fixtures.

B. The locations of all items shown on the Drawings or called for in the Specifications that are not definitely fixed by dimensions are approximate only. The exact locations necessary to secure the best conditions and results must be determined at the project and shall have the approval of the Architect before being installed. Do not scale Drawings.

C. Follow Drawings in laying out work and check Drawings of other trades to verify spaces in which work will be installed. Maintain maximum headroom and space conditions at all points. Where headroom and space conditions appear inadequate, Architect shall be notified before proceeding with installation.

D. If directed by the Architect, without extra charge, make reasonable modifications in the layout as needed to prevent conflict with work of other trades or for proper execution of the work.

E. Piping or ductwork connected to the equipment may require different size connections than indicated on the Drawings. The Contractor shall provide transition pieces as required at the equipment.

1.6 COORDINATION AND FIELD MEASUREMENTS

A. Avoid space conflict with other trades.

B. Submit the equipment and material required in accordance with field measurements taken at the proper time during the construction progress.

1.7 EQUIPMENT AND MATERIALS

A. All equipment and materials required for installation under these Specifications shall be new and without blemish or defect. All electrical equipment shall bear labels attesting to Underwriters' Laboratories approval. Where no specific indication as to the type of quality of the material or equipment is indicated, a first-class standard article shall be furnished.

B. All major equipment of one type shall be the product of the same manufacturer and submitted by a certified representative. Submittals off the internet will not be acceptable.

1.8 SHOP DRAWINGS

A. As and when required by the general conditions, submit electronically PDF shop drawings of all equipment, materials, piping, sleeves, conduit, ductwork and wiring diagrams and further obtain written comments "No Exception" or "Exception as Noted" for same from the Architect, before installing any of these items.

B, For piping, sheet metal, sleeve layout and reflected ceiling plan shop drawings, utilize CAD drawings. After the PDF is noted and corrected by the Engineer, it will be returned. Then the required resubmittal shall be prepared.

C. Shop drawings shall consist of manufacturer's certified scale drawings, cuts, or catalogs, including descriptive literature and complete certified characteristics of equipment, showing dimensions, capacity, code requirements, motor and drive testing, as indicated on the Drawings or Specifications.

D. Certified performance curves for all pumping and fan equipment shall be submitted for review.

E. Samples of materials or equipment, when requested by the Architect, shall be submitted for review.

F. Samples, drawings, specifications, catalogs, etc., submitted for review, shall be properly labeled indicating project name, specific service for which material or equipment is to be used, Section and Article number of Specifications.

G. Catalogs, pamphlets, or other documents submitted to describe items on which review is being requested, shall be specific and identification in catalog, pamphlet, etc., of item submitted shall be clearly made in ink. Data of a general nature will not be accepted.

H. The following is the meaning of the comments indicated on the Engineer’s shop drawing review stamp. The review of a shop drawing shall not be considered as a guarantee of measurements or building conditions. Where drawings are reviewed, said review does not in any way relieve responsibility, or necessity, of furnishing material or performing work as required by the Contract Drawings and Specifications.

1. “Reviewed” means that the shop drawing is correct as to performance, capacity, etc. and in substantial conformance with the contract documents.
2. “Rejected” means that the shop drawing does not comply or conform to the contract documents. Fabrication or purchase may not commence.

1) “Revise and Resubmit” means that the comments and/or correction are so extensive and important that the reviewer wants to see how the comments and/or corrections are resolved prior to release for fabrication and/or purchase. Fabrication and/or purchase may not commence.

2) “Furnish as Corrected” means that comments and/or corrections are minimal and do not drastically impact on the performance, capacity, layout, etc. Fabrication and/or purchase may commence as long as all comments are addressed to the Engineer’s satisfaction.

3) Note that the comments "Reviewed" or "Furnish as Corrected" marked on the shop drawings or other information submitted in accordance with the requirements hereinbefore specified does not assure that the Engineer, Architect, or any other Owner's representative attests to the dimensional accuracy or dimensional suitability of the material or equipment involved or the mechanical performance of equipment. Comments on the shop drawings does not invalidate the Plans and Specifications if the shop drawings are in conflict with the Plans and Specifications.

I. Failure to submit shop drawings in ample time for checking shall not entitle an extension of Contract time and no claim for extension by reason of such default will be allowed.

J. Prior to submission of shop drawings, thoroughly check each shop drawing, reject those not conforming to the Specifications and indicate (by signature) that the shop drawings submitted meet Contract Requirements.

K. All shop drawings showing routing of ductwork, piping and conduit, shall not be less than 1/4" = 1'-0" scale.

L. Incorporate this numbering system to help keep track of shop drawing submittals:

M..... HVAC Shop Drawings
E.....Electrical Shop Drawings
P.....Plumbing Shop Drawings
SP.....Sprinkler Shop Drawings

M. Concurrent numbers shall follow the prefix letter. Example: H-1, H-2, etc. In addition, shop drawings requiring resubmission should bear the number of the original submission and bear a suffix as follows: H-1A (second submission), H-1B (third submission), etc.

N. Label resubmitted shop drawings with a stamp indicating the submittal number, for example: SECOND SUBMISSION; THIRD SUBMISSION, etc., and send separate transmittals for each item being submitted so that one transmittal does not cover more than one specific item or group of items from one manufacturer.

O. Before request for acceptance and final payment for the work, write a letter to the Architect stating that all shop drawings have been brought to a condition "No Exception" or "No Exception as Noted." Any outstanding shop drawings must be brought to that condition before the project can be accepted.

1.9 RECORD DRAWINGS

A. Furnish record drawings as described in the General Conditions.

B. During construction, keep an accurate record of all deviations between the work as shown on the Drawings and that which is actually installed.

C. Secure from the Architect, a complete set of CAD drawings of the Drawings and note thereon all changes. Make a complete record of all changes and revisions in the original design which exist in the completed work.

D. Furnishing above transparencies and preparing these Record Drawings shall be at no additional cost to the Owner. When all revisions showing the work as finally installed are made, the corrected Mylar transparencies shall be submitted for review by the Architect.

E. After review of the "Record Drawings" transparencies by the Architect, provide the Owner with one set of blackline prints and Mylar transparencies, at no additional cost to the Owner.

1.10 LAWS, ORDINANCES, PERMITS AND FEES

A. Give all necessary notices, obtain all permits and pay governmental taxes, fees and other costs in connection with the work; file all necessary plans, prepare all documents and obtain all necessary approvals of all governmental departments having jurisdiction for all combustion and refrigeration

equipment such as boilers, furnaces, oil burners, refrigeration condensing units, chillers and air handling units. Obtain all required Certificates of Inspection for the work and deliver to the Architect before request for acceptance and final payment for the work.

Include in the work, without extra cost to the Owner, any labor, materials, services, apparatus, drawings, (in addition to Contract Drawings and Documents) in order to comply with all applicable laws, ordinances, rules and regulations, whether or not shown on Drawings and/or specified.

B. All Materials furnished and all work installed shall comply with the rules and recommendations of the National Fire Protection Association, with all requirements of local utility companies, with the recommendations of the fire insurance rating
organization having jurisdiction and with the requirements of all governmental agencies having jurisdiction.

C. All equipment manufacturers are cautioned to provide internal factory restraints where necessary to comply with the seismic requirements of the New Jersey Uniform Construction Code.

1.11 INDEMNIFICATION

A. Pay all royalties and defend all suits or claims for infringement of any patent rights and save the Owner harmless from loss on account thereof.

B. If process or article specified is an infringement of a patent, promptly notify the Architect in writing and any necessary changes shall be as provided in the Contract for changes in the work to avoid infringement. If the Contractor performs any work specified, knowing it to be an infringement of patent, he shall bear all costs arising there from.

C. Take out all necessary insurance, free of extra charge and agree to indemnify and save harmless the Owner, Architect and Consulting Engineers against loss or expense, by reason of the liability imposed by law upon such party for damages because of bodily injuries, including death at any time resulting there from, accidentally sustained by any person or persons or on account of damage to properly arising out of or in consequence of the performance of this Contract, whether such injuries to persons or damage to property are due or claimed to be due to any negligence in the performance of the Contract by the Owner, Architect or Consulting Engineers,. Or their employees or agents.

1.12 ORGANIZATION OF WORK

A. Coordinate and perform the work called for under this Contract simultaneously with the work of other trades such as not to delay the overall progress of the work. Furnish promptly to other trades involved at the project, all information and measurements
relating to the work which they may require. Cooperate with them in order to secure the harmony necessary in the interest of the project as a whole.

B. Furnish and install all work so as to meet all construction schedules.

C. Keep a competent superintendent in charge of the work at all times. Such superintendent shall be replaced if unsatisfactory to the Owner.

D. Maintain a complete file of shop drawings at all times available to the Owner's representative.

E. Where items of equipment and/or materials are indicated in the Specifications as being furnished by other trades for installation, assume responsibility for the unloading of such equipment and/or materials from the delivery trucks and for providing safe storage for same as required pending installation.

F. Where the work is to be installed in close proximity to work of other trades, or where there is evidence

that the work will interfere with work of other trades, assist in working out space conditions to make a satisfactory adjustment. If installations are made before coordination with other trades, make all necessary changes in the work without extra charge to the Owner.

G. Before submitting shop drawings for sleeves, piping and ductwork, the Heating, Ventilating and Air Conditioning Subcontractor shall prepare combined 1/4" = 1' - 0" scale shop drawings for piping and

ductwork indicating location of piping and ductwork with dimensions for each floor and Mechanical Rooms. A CAD file of these shop drawings shall be given to the Electrical Contractor.

H. The Electrical Contractor shall indicate the location of all lighting fixtures, conduit runs on these shop drawings. The Electrical Contractor shall then forward this shop drawing file to the Plumbing Contractor. The Plumbing Contractor shall indicate his work and forward to the Sprinkler Contractor, who shall indicate his work.

I. The Heating, Ventilating and Air Conditioning Contractor shall arrange a Coordination Meeting with the other Contractors under the supervision of the General Contractor. After coordination, each Contractor shall sign the CAD file. The Heating, Ventilating and Air Conditioning Contractor shall submit these drawings to the Architect for review and he shall call any conflicts that could not be resolved in the coordination meetings and/or deviation from original design, to the Architect's attention. After receiving written review from the Architect, each Contractor shall prepare/revise their required shop drawings.

1.13 TEMPORARY OPENINGS

A. Ascertain, from examination of the Architectural Drawings, whether any special temporary openings in the building will be required for the admission of apparatus provided under the Contract and notify the Architect accordingly. In the event of failure to give sufficient notice to the Architect in time to arrange for these openings during construction, assume all costs of providing such openings thereafter.

1.14 PIPE EXPANSION

A. All pipe connections shall be installed to allow for freedom of movement of the piping during the expansion and contraction without springing. Swing joints, ball joints, expansion loops and expansion joints with proper anchors and guides shall be provided where necessary and/or when shown on the Drawings. Anchors and guides shall be subject to the review of the Architect.

1.15 SCAFFOLDING, RIGGING, HOISTING

A. Provide all scaffolding, rigging, hoisting and services necessary for erection and delivery into the premises of all equipment and materials furnished under this Section of the Specifications and remove same from premises when no longer required.

B. In the event that supplementary bracing of the basic building structure is required to assure a secure rigging procedure and a secure route for the equipment being handled, assume full responsibility for such supplementary bracing, including its engineering in accordance with applicable codes.

1.16 BASES AND SUPPORTS

A. The standards for Concrete bases are specified under “Cast-In-Place Concrete”. Each Contractor shall furnish dimensioned drawings of the concrete bases they are providing, to the Architect for approval. Steel dowels, sleeves and anchor bolts shall be furnished and set by the Contractor.

1.17 SLEEVES, PIPE AND CONDUIT INSERTS AND ANCHOR BOLTS

A. Provide and assume responsibility for the location and maintenance in proper position of all sleeves, inserts and anchor bolts required for the work. In the event that failure to do so requires cutting and

patching of finished work, it shall be done without additional cost to the Owner.

B. All pipes and conduits passing through masonry walls or partitions shall be provided with sleeves having an internal diameter larger than the outside diameter of the pipe or insulation enclosing the pipe or conduit. Sleeves shall be Schedule 40 black steel pipe.

C. Sleeves through foundation walls shall be James B. Clow & Sons No. F-1430 or F-1435 cast iron wall sleeve with intermediate integral flange. Sleeves shall be set with ends flush with each face of wall. The space between sleeve and pipe shall be packed with oakum to within 2" of each face of the wall. The remaining space shall be packed and made watertight with a waterproof compound.

D. Sleeves through concrete floors or interior masonry walls shall be Schedule 40 black steel pipe, set flush with finished wall surfaces, but extending 1/2" above finished floors. The open sleeve space shall be packed with non- combustible materials.

E. Sleeves through non-masonry partitions shall be 22-gauge galvanized sheet steel, set flush with finished surfaces of partitions.

F. Inserts shall be individual type of malleable iron construction with accommodation for removable nuts and threaded rods up to 3/4" diameter, permitting lateral adjustment, except as otherwise noted. Individual inserts shall be Grinnell Fig. 279 up to 5" pipe and
conduit, Fig. 282.6" and up to 8" pipe and conduit, Fig. 152 above 8" and up to 12" pipe
and conduit. For Figures 282 and 152, they shall come with an opening at the tip to allow reinforcing rods up to 1/2" diameter to be passed through the insert body. Rods shall extend a minimum of 4" on either side of the insert.

G. In general, all piping and conduit shall be supported from structural steel building members only or approved malleable steel insets imbedded in concrete pours.

H. Where revisions are required and are approved, piping and conduit 3" and smaller may be supported at intermediate points by Phillips' 3/4" expansion bolts with lead shields, provided main supports are welded to structural steel and are not more than twenty feet on center. Intermediate supports, for pipe 4" and larger shall be attached to concrete by means of 4" x 4"x 3/8" clip knee angles with 3/4" expansion bolt in shear and supporting rod at 90 degrees from another bolt.

I. Piping and conduit 3" and smaller shall be supported from existing slab by "Phillips" 3/4 expansion bolts with lead shields. Piping 4" and larger shall be supported by means of 4" x 4" x 3/8" clip knee angle with 3/4" expansion bolt in shear and supporting rod at 90 degrees from another bolt.

J. Provide sleeves for pipes passing through roofs. Sleeves passing thru roofs shall be as detailed on drawings, extending min. 12" above finished roof. All pipes passing through roofs shall be a minimum of 10" from walls or other construction to permit proper flashing. Provide counter flashing.

K. Where sleeves pass through waterproofed floors, they shall be IPS brass pipe sleeves of the required diameter, brazed at the bottom to 18" x 18", 16-ounce copper flashing for bond with waterproofing. The tops of sleeves shall extend 1/2" above floors.

L. No ductwork, piping, conduit or equipment shall be supported from corrugated decking construction. Provide supplementary steel to support ductwork, piping, conduit or equipment. Supplemental steel members shall be welded to building structural steel.

M. All hangers, rods and supports shall be installed prior to any construction fireproofing.

N. The required fire resistance rating of floor or floor/ ceiling assemblies and walls shall be maintained where a penetration is made for electrical, mechanical, plumbing pipes, conduits, ducts and systems. Firestopping shall be provided at openings around vents, pipes, ducts, conduits at floor levels and walls with non-combustible materials, such as rockwool or equal.

For openings around pipes and conduits and/or sleeves, 3M Product Caulk CP 25 and Putty 303 is approved equal.

1.18 ESCUTCHEONS

A. Provide escutcheons on pipes wherever they pass through ceilings, walls or partitions.

B. Escutcheons or pipes passing through outside walls shall be Ritter Pattern and Casting Co., No. 1, solid, cast brass, flat type secured to pipe with set screw.

C. Escutcheons for pipes passing through floors shall be Ritter Pattern and Casting Co., No. 36A, split-hinged, cast brass type, designed to fit pipe on one end and cover sleeve projecting through floor on the other end.

D. Escutcheons for pipes passing through interior walls, partitions and ceilings shall be Ritter pattern and Casting Co., No. 3A, split-hinged, cast brass chromium plated type.

1.19 MANUFACTURER'S IDENTIFICATION

A. Manufacturer's nameplate, name or trademark, shall be permanently affixed to all equipment and material furnished under this Specification. Where such equipment is in a finished occupied space, the nameplate shall be in a concealed but accessible location. The nameplate of a Subcontractor or Distributor will not be acceptable.

1.20 EQUIPMENT NAMEPLATES

Provide for each item of equipment, including panelboards, disconnects, breakers, starters, switches and all control devices, pumps, fans, compressors, boilers, etc., a permanently attached nameplate made of black surface, white core laminated bakelite with incised letters. Subcontractor furnishing equipment shall provide nameplate. Pneumatic, electric and mechanically actuated gauges shall have a brief, but complete description of their function. Stating the air pressure or voltage range alone is not acceptable. Nameplates shall be a minimum of 3" long by 1-1/2" wide and shall bear the equipment name and item number of 1/2" high white letters as designated in the equipment schedule. Mounting screws shall have chrome plated acorn headed screws.

1.21 TAGS AND CHARTS

A. Furnish and attach to each valve as hereinafter specified, a 1-1/2" diameter brass tag with 1/2" indented numerals filled with durable black compound. Tags shall be securely attached to stems of valves with copper wire and "S" hooks.

1. Valve charts shall consist of schematic drawings of piping layouts, showing and identifying each valve and describing the function. Upon completion of the work, one copy of each chart, sealed to rigid backboard with clear lacquer placed under glass and framed, shall be hung in a conspicuous location in the main equipment room, unless otherwise directed by the Architect. Two (2) additional unmounted copies in 8-1/2" x 11" leather ring binders shall be delivered to the Architect. Also furnish three (3) copies of schematic flow chart with corresponding valve numbers noted on chart.

B. Provide tags for the following valves:

1. Zone control, bypass, shut-off, check and balancing valves.

2. Building and area shut-off and balancing valves.

3. Control, bypass, shutoff, balancing and drain valves for major pieces of equipment such as boilers, domestic hot water heaters, heat exchangers, refrigeration machines, pumps, heating, ventilating and air conditioning units, cooling towers, etc.

4. System drain valves, safety and relief valves. Vacuum breakers.

1.22 IDENTIFICATION

A. Identification shall be in accordance with "Scheme for Identification of Piping System, ANSI A13.1 and OSHA safety color regulation.

B. Markers shall be snap-on type as manufactured by Seton Nameplate Corp., New Haven, Conn. (Setmark System) or approved equal. Markers shall completely encircle the pipe with a substantial overlap. No adhesive shall be used. They shall be manufactured of U.L. approved, self- extinguishing plastic.

C. Provide identification for new and altered piping, ductwork and conduit for electrical work.

D. Pipe shall be lettered and valves tagged in accordance with the schedule below. Lettering shall be located near each valve and branch connection and at intervals of not over 40 feet (10 feet on fire lines) on straight runs of pipe. Provide flow arrows for all piping at each marker. Adjacent to the legend, stencil the size of the pipe, conduit or ductwork. Letter colors are as follows: yellow with black letters, green with white letters, blue with white letters and red with white letters.

STENCIL AND VALVE TAG SCHEDULE

Service Stencil Designation	Tag Color	Designation
Cold Water	Green	C.W.
Hot Water (Plumbing) F.Hot Water Deg. F.	Yellow	H.W. Deg.
Sanitary Sewer San. Sewer	Green	----
Storm Sewer Storm Sewer	Green	-----
Refrigerant Suction	Green	RS
Refrigerant Liquid	Green	RL
Refrigerant Hot Gas	Green	RHG
Vent Piping Vent	Green	-----
Air Conditioning Drain	Green	-----
Safety Valve Discharge Safety V. Discharge	Yellow	S.V.D.

Heating Hot Water Supply Heat. Hot Water Sup.	Green	H.H.W.S.
Heating Hot Water Return Heat. Hot Water Ret.	Green	H.H.W.R.
Chilled Water Supply	Green	CHWS
Chilled Water Demand	Green	CHWS
Chemical Water Treatment Chemical W.T.	Green	C.W.T.
Air Conditioned Supply Air		
A.C. Supply Air	Green	-----
Return Air R.A.	Green	-----
Exhaust Air E.A.	Yellow	-----
Outside Air O.A.	Green	-----
Mixed Air M.A.	Green	-----

E. Pumps and other equipment shall have nameplates to show the number, if any and service.

F. "HIGH VOLTAGE" in black letters two inches high, stenciled at 10-foot intervals over a continuous painted orange background.

G. Except where other means of identification are specified, electric cabinets, switchboards, motor control centers, transformers, system control boards, disconnecting switches, remote control switches, individual motor starters and motor control pushbutton stations shall be stenciled to show the service and number, if any, of the equipment controlled, as appropriate. Panelboards and other electrical equipment located in finished areas, such as offices, shall have the identification placed on the inside of the cabinet doors.

H. Cabinets housing 480V/277-volt panelboards shall have "480/277 volt" stenciled in 2-inch high yellow letters on the inside of the cabinet doors.

I. Cabinet housing emergency lighting panelboards shall have the word "EMERGENCY" in 2-inch high red letters on the outside of the cabinet, in addition to other lettering required above.

J. The bolted covers of housing for disconnecting switches or links in bus ducts between network transformers and switchboards shall be lettered to identify the equipment within.

K. Serial numbers shall be stenciled on the tanks and covers of transformers having their nameplates attached to the high voltage switch chamber covers.

1.23 DRIP PANS

A. Examine the drawings and in cooperation with the Electrical Work confirm the final location of all electrical equipment to be installed in the vicinity of piping. Plan and arrange all overhead piping no closer than two feet from a vertical line to electric switchboards, panelboards, or similar equipment.

B. Where the installation of piping does not comply with the requirements of foregoing paragraph, the piping shall be relocated to achieve compliance.

C, Provide copper gutters as follows:

1. Provide a gutter of 16 ounce cold roller copper under every pipe which is within 2'-0" (two feet) of being vertically over any motor, electrical controllers, switchboards, panelboards, or the like.

2. Each gutter shall be soldered and made watertight, properly suspended; and carefully pitched to a convenient point for draining. Provide a 3/4 inch drain to nearest floor drain or slop sink.

3. In lieu of such separate gutters, a continuous protecting sheet of similar construction, adequately supported and braced, properly rimmed, pitched and drained, may be provided over any such motor and extending 2'-0" in all directions beyond the motor, over which such piping has to run.

1.24 TOOLS

A. All special tools for proper operation and maintenance of the equipment shall be delivered to the Owner's representative and a receipt requested for same at no additional cost to the Owner.

1.25 QUIET OPERATION

A. All equipment and material shall operate under all conditions of load without any sound or vibration which, in the opinion of the Architect, is objectionable. Where sound or vibration conditions arise which are considered objectionable by the Architect, eliminate same in a manner reviewed by the Architect, at no additional cost.

1.26 CLEANING, PIPING, DUCTS AND EQUIPMENT

A. Clean all piping, ducts and equipment of all foreign substances inside and out before being placed in operation.

B. If any part of a system should be stopped by foreign matter after being placed in operation, the system shall be disconnected, cleaned and reconnected wherever necessary to locate and remove obstructions. Any work damaged in the course of removing obstructions shall be repaired when the system is reconnected at no additional cost to the Owner.

C. During construction, properly cap all pipes and equipment nozzles so as to prevent the entrances of sand, dirt, etc.

1.27 DELIVERY OF MATERIAL

A. Deliver the material and store same in spaces indicated by the Architect and assume full responsibility for damage to structure caused by any overloading of the material.

1.28 PAINTING

A. Paint all exposed unpainted, non-insulated, non-galvanized, ferrous metal surfaces of pipes, conduits, ducts, equipment, fixtures, hangers, supports and accessories, including those portions of electrical panels and their doors that are exposed to view into the complete building with one prime coat and one finish coat of acrylic paint in a color selected by Architect.

B. The inside of all ductwork where visible through openings shall be painted with two prime coats of dull black paint.

C. Nameplates on all equipment shall be cleaned and left free of paint.

1.29 LUBRICATION

A. Assume responsibility that all rotating equipment is properly lubricated as soon as it is connected by the Electrical Contractor before operation of this equipment is started. Assume responsibility for any damage to any equipment that is turned on without previously having been oiled or greased when connected up.

1.30 EXCAVATION AND BACKFILL

A. All excavation and backfill, shall be done by each Contractor in accordance with Division 2 Standards.

1.31 TESTS

A. All piping, wiring and equipment shall be tested as specified under the various sections of the work. Labor, materials, instruments and power required for testing shall be furnished under the respective sections of the Specification.

B. Tests shall be performed to satisfaction of the Architect. The Architect will be present at such test, when he deems necessary and such other parties as may have legal jurisdiction.

C. Pressure tests shall be applied to piping only before connection of equipment and installation of insulation. In no case shall piping, equipment, or accessories be subjected to pressure exceeding their rating.

D. All defective work shall be promptly repaired or replaced and the test shall be replaced until the particular system and component parts thereof receive the review of the Architect.

E. Any damages resulting from tests shall be repaired or replaced and the tests shall be repeated until the particular system and component parts thereof receive the approval of the Architect.

F. The duration of tests shall be as determined by all authorities having jurisdiction, but in no case less than the time prescribed in each Section of the Specification.

G. Equipment and systems which normally operate during certain seasons of the year shall be tested during the appropriate seasons. Tests shall be performed on individual equipment, systems and their controls. Whenever the equipment or system under test is interrelated with and depends upon the operation of other equipment, systems and controls for proper operation, functioning and performance, the latter shall be operated simultaneously with the equipment or system being tested.

H. The electrical work shall include providing any assistance (such as removal of switchboard and panelboard trims and covers, pull and junction box covers, etc.) deemed necessary by the Architect to check compliance with the Drawings and Specifications.

1.32 OPERATING INSTRUCTIONS

A. Two months prior to the completion of all work and the final inspection of the installation by the Owner, five (5) copies of a complete Instruction Manual, bound in booklet form and suitably indexed, shall be submitted to the Architect for review. All written material contained in the manual shall be typewritten or printed.

B. The manual shall contain the following items:

Table of Contents (HVAC and Electrical)

I. Introduction - Explanation of Manual and its use.

II. Description of Systems
1. Complete schematic drawings of all systems
2. Functional and sequential description of all systems.
3. Relationship of system where applicable to the supervisory data system.

III. Systems Operation
1. Start-up procedures.
2. Shut-down procedures.
3. Reset and adjustment and balancing procedures.
4. Seasonal operation.
5. All posted instruction charts.

IV. Maintenance
1. Cleaning and replacement - lines, components, filters, strainers, etc.
2. Lubrication.
3. Charging and filling.
4. Purging and draining.
5. Systems trouble shooting charts.
6. Instruments checking and calibration.
7. Procedures for checking out functions with remote (Supervisory Data Console) indication and control.
8. Recommended list of spare parts.

V. Listing of Manufacturers

VI. Manufacturer's Data (Where multiple model, type and size listings are included, clearly and conspicuously indicate those that are pertinent to this installation.)
1. Description - Literature, drawings, illustrations, certified performance charts, technical data, etc.
2. Operation.
3. Maintenance - including complete trouble shooting charts.
4. Parts List.
5. Names, addresses and telephone numbers of local recommended repair and service companies.
6. Guarantee data.
7. Model No. and Serial No. of all equipment.

1.33 TRAINING OF OWNER’S PERSONNEL

A. This article supplements any training called for in other Divisions or Sections.

B. Testing and balancing, the Contractors will thoroughly train the Owner’s personnel.

C. Training will take the form of four (4) four-hour classroom sessions to introduce the operation, maintenance, and management personnel to the manuals, drawings, and other documents and aids available to operate and maintain the equipment and systems. All sessions shall be videotaped by the relevant sub-contractor. The tapes shall be turned over to the Owner with the O/M manual.

D. Factory specialists in the area of major equipment and systems will present sessions on their specific equipment or system, or both.

E. Extensive hands-on training will be conducted so that actual operation and maintenance of the equipment and systems can be the responsibility of these personnel at the completion of the project.

F. TYPICAL TRAINING AGENDA

1. Walk-through of building (Project)

2. Start-up Procedures
a. Seasonal Considerations
b. Check List
c. Emergency Procedures

3. Operation Procedure
a. Occupancy Consideration
b. Seasonal Considerations (Changeover)

c. Manual/Automatic
d. Emergency

4. Shut Down
a. Check List
b. Normal
c. Emergency

5. Maintenance (list major equipment systems)
a. Routine
b. Periodic
c. Service
d. Lubrication
e. Overhaul
f. Factory

6. Warranties
a. What they cover
b. How to use them

7. Spare Parts

8. Tools
a. Normal tools, supplies and equipment
b. Special tools

9. Hands-on operation of equipment and systems

. After completion of all work and all tests and at such time as designated by the Architect, provide the necessary skilled personnel to operate the entire installation for a period of two (2) consecutive days, eight (8) hours each.

H. During the operating period, verify the previous training of the Owner's representatives in the complete operation, adjustment and maintenance of the entire installation before turning over the operation of the installation to the Owner.

1.34 GUARANTEE

A. The Contractor guarantees by his acceptance of the Contract that all work installed will be free from any and all defects and that all apparatus will develop capacities and characteristics specified and that if during a period of two years from date of substantial completion of work any such defects in workmanship, material or performance appear, he shall immediately replace, repair, or otherwise correct the defect or deficiency without cost to the Owner within a reasonable time. Notify the Architect in writing of the time required to do work. For heating systems the guarantee period must include two continuous heating seasons from November 1st to April 1st. For cooling systems the guarantee period must include two continuous cooling season from May 1st to
October 1st.

B. Replace or repair to the satisfaction of the Owner any and all damage done to the building or its contents or to the work of other trades in consequence of work performed in fulfilling guarantee.

C. This Article is general in nature and will not waive stipulations of other claims which specify guarantee periods in excess of two (2) years.

1.35 OPERATION PRIOR TO COMPLETION

A. The Owner may require operation of parts or all of the installation for the beneficial occupancy prior to final completion and acceptance of the building.

B. The operation shall not be construed to mean acceptance of the work by the Owner. The Owner will furnish supervisory personnel to direct operation of the entire system and the Contractor shall continue to assume this responsibility until final acceptance.

1.36 ELECTRICAL WORK

A. The Electrical Contractor shall install and do all power wiring for all electrical devices, motor starters and unmounted motors, furnished to him at the job site by other trades.

B. The Heating, Ventilating and Air Conditioning Contractor shall provide all wiring for the Automatic Temperature Controls and condenser water treatment controls, except as otherwise specified herein.

C. For single phase motors which are not interlocked with other motors and which have temperature control or motor control devices in the power circuit, all installation and wiring shall be done by the Electrical Contractor.

D. For all other motors, temperature control wiring and motor control wiring, including wiring for interlocking shall be provided by the Section providing the motors, including the installation of all control devices.

E. Electrically operated equipment supplied by other trades, which are required to be installed and power wired by the Electrical Contractor, shall be delivered with detailed instructions for their installation and wiring in sufficient time and proper sequence to meet the work schedule.

F. Furnish all electrical motors, all starters and all other motor control devices for motor driven equipment required for the work. The Electrical Contractor shall provide all code required disconnects. The setting of all motors required for mechanical equipment shall be included as part of the mechanical work.

Equipment which includes a number of correlated electrical control devices mounted in a single enclosure or on a common base with equipment, shall be supplied for installation completely wired as a unit with terminal boxes and ample leads ready for external wiring.

G. All electrical items called for as part of the mechanical work shall conform to NEMA Standards, to the requirements of the National Fire Protection Association and to requirements of any local electrical code authority having jurisdiction, any field modifications required to ensure such conformance shall be included as part of the mechanical work.

H. The purchase and delivery of floor mounted motor starter equipment shall include the purchase and delivery of channel sills for mounting the starter equipment.

I. Whether or not shown on drawings, all fan motors shall have disconnected switches, provided by Electrical Contractor.

J. The supplying of any and all "field instruction" diagrams deemed necessary by the Architect for the complete delineation of electrical wiring for mechanical equipment shall be included as part of the mechanical work. The above requirements shall be met regardless of any assignment between trades of the responsibility for the purchase of electric motors and associated starters and control devices.

The drawings describing the electrical/or the mechanical work may include explanatory wiring diagrams indicating the function intended for the motor control circuits of certain specific motors. The "field instructions" wiring diagrams required as part of the mechanical work shall conform to these intended functions.

1.37 ELECTRIC MOTORS

A. Each Contractor shall provide all electric motors required for driving all motor driven equipment required to be furnished under this Section of the Specification.

B. Except as otherwise indicated on the drawings all motors shall be designed for 3-phase, 60 cycle alternating current operation with 208 volts across the motor terminals, except that unless otherwise specified herein, all motors 1/3 HP and smaller shall be designed for single phase, 60 cycle alternating current at 120 volts across the terminals. Before ordering motors, ascertain the actual voltages and other current characteristics that will be available and permissible for each motor. Report the same in writing to the Architect and obtain approval before ordering motors. The designation of current characteristics in these Specifications does not relieve the responsibility for ascertaining the actual conditions of electric service available for each motor or for the proper operation of all motors under the actual conditions.

C. The speed, horsepower, type and other essential data for each motor, if not given under paragraphs describing the various motor driven apparatus, or in the schedules on the drawings shall be obtained from the manufacturer of the respective apparatus and shall be submitted to the Architect for his review. All two speed motors shall be single winding type.

D. Provide oversized motor junction box for 2 speed motors.

E. All motors shall be built in accordance with the latest rules of the National Electrical Manufacturers Association and of the Institute of Electrical and Electronic Engineers and also as hereinafter specified.

F. Motors 1/2 HP and larger shall have Class B insulation. All motors shall be rated for continuous duty and shall be designed for temperature rises not to exceed 55 Degrees C. for fully enclosed type, 55 Degrees C. for splashproof types and 40 Degrees C. for all other motors except as otherwise specified herein. Motors shall be capable of withstanding momentary overloads of fifty percent (50%) without injurious heating. They shall operate without excessive heating, flashing or sparking under any conditions within the specified capacity of load and speed. All motors shall operate quietly and shall be replaced if, in the Architect's opinion, they do not do so. All motors which are in the airstream of air conditioning units, shall be totally enclosed type.

G. Motors 1/2 HP and larger shall have ball or roller bearings with pressure grease lubrication, except where otherwise noted.

H. Direct connected motors shall be furnished without an adjustable base. All motors connected to driven equipment by belt shall be furnished with adjustable sliding bases, except fractional motors with slotted mounting holes.

I. All motor leads shall be permanently identified and supplied with connectors.

J. Motors shall have nameplates giving manufacturer's name, serial number, horsepower, speed, voltage, phase and current characteristics.

K. The insulation resistance between static conductors and frames of motors at the time of final inspection shall be not less than one-half megohm.

L. All motors shall be of the proper type for the duty and shall have sufficient torque to start and run the equipment to which they are connected and starting currents and running currents shall not exceed the limits imposed by the laws or rules and regulations of the public authorities having jurisdiction or of the electrical utility company. All motors shall have sufficient horsepower capacity and rated duty to operate the apparatus to which they are connected so as to give the speeds and performance specified, but the horsepower shall be in no case less than that stated herein or shown on the drawings. A schedule giving the characteristics of the motors proposed for each type of service shall be submitted to the Architect for approval.

M. The maximum full load speed of each direct connected motor shall be suitable for the equipment it drives.

N. Except where V-Belt drive is specified, the fan wheels for ventilating fans shall be mounted on the motor shafts, which shall be designed for this duty.

O. All motors, except motors furnished as an integral part of equipment and factory installed on the equipment, shall be of same manufacture.

P. Polyphase motors shall be squirrel cage induction high efficiency energy saver type, suitable for the starting torque and current requirements.

Q. Single phase motors shall be of the capacitor start induction run or split phase type as required for proper operation of the driven equipment.

R. All motors shall be premium efficiency motors to qualify for NJ Smart Start incentives. The efficiency of energy efficient motors shall be verified in accordance with NEMA Standard NGI-12.53a. Minimum acceptable efficiency shall be as follows:

EFFICIENCY OF ENERGY MOTORS

Rating	H.P.	Efficiency
460 Volts	1	85.53
3 Phase, 60 c/s	1.5 & 2	86.5
1.15 Service Factor	3	89.5
40 Degrees C Ambient	5	89.5
	7.5	91
	7.6	91.7
	15 & 20	93
	25	93.6
	26	94.1
	30	94.5
	40 & above	94.5

1.38 INDIVIDUAL MOTOR STARTERS

A. Each Contractor shall furnish and turn over to the Electrical Contractor, who shall erect and provide power wiring for same, motor starting equipment for motors provided as part of the work. If a motor is replaced (even same HP), provide new starter for that motor.

B. For each motor 1/3 HP or smaller, starters shall be manual, with thermal overload protection, and pilot light, except that where interlocking or automatic control (other than for unit and cabinet heaters) is required, starters shall be 120 volts combination circuit breaker and magnetic starter with pilot light.

C. For each motor 1/2 HP and over, starters shall be combination unfused switch and magnetic across-the line. All magnetic starters shall have 3 thermal overcurrent-units. Provide 460/120 volt transformers for control circuits with a fused secondary.

D. For motors requiring electric interlock, or automatic control features, starters shall be equipped with the necessary auxiliary contacts, or terminals to provide the control features desired. Such starters shall be provided with "hand-off-auto" selection pushbuttons mounted in cover. For two speed motors, provide "high-low-off- auto" four position selector switch. In hand" position, all controls and safeties shall be operative.

E. In addition to any auxiliary contacts required for interlocking purposes, each magnetic starter shall be equipped with one normally open auxiliary control circuit contact either for "sealing in" or as a spare for future use.

F. Transformer type, pilot lights shall be provided for all magnetic starters and for all remote-control stations. Pilot light shall be mounted on cover and shall have 6-volt bulb.

G. For two speed motors, provide a pilot light for each speed. For starters for 10 HP and over, provide adjustable 20 second time delay between Hi and Low Speed.

H. Each starter shall be clearly identified after installation by engraved nameplates. The nameplates shall be bakelite black plates with 1/2" high white letters and shall be securely fastened to starter or to wall immediately below same. Sections furnishing starter shall provide nameplates.

I. The Electrical Contractor shall install all starting equipment except starters specified to the factory mounted and wired as part of the equipment, and shall do all wiring necessary

to supply power to the starter, including connections from the starters to the motors. All selector switches and pilot lights required in accordance with the preceding information, shall be flush mounted in the cover of its respective starter.

J. All enclosures shall be NEMA Type I sheet steel, with hinged cover, for general purpose indoor application, unless otherwise indicated. Enclosures shall be arranged for equipment or wall mounting. Weatherproof NEMA Type 4 enclosures shall be provided for all outdoor starters.

K. Three phase motors under 40HP shall be furnished with full voltage, combination unfused/fused (refer to electrical drawings) switch and magnetic, across-the-line starters. Three phase motors 40HP and over shall be furnished with reduced voltage, combination
unfused/fused (refer to electrical drawings) switch and magnetic starters of the auto transformer closed transition type.

L. All starters, except those furnished as an integral part of equipment and factory installed on the equipment, shall be of the same manufacture.

1.39 MOTOR CONTROLLERS

A. Furnish motor controllers which are not under the starter cover, required for remote control of motors. Motor controllers shall be defined as devices for motor control, such as pushbuttons, switches, etc.

B. Unless otherwise noted, motor controllers shall be housed in NEMA Type 1 general purpose enclosure. Outdoor controllers shall be provided with weatherproof NEMA Type 3 enclosures.

C. The controllers to be installed in finished areas shall be flush mounted.

D. The Electrical Contractor shall provide wiring for motor controllers.

E. All motor controllers shall be minimum NEMA size, regardless of the actual duty they are required to perform.

F. Pushbuttons shall be of the normal duty spring return momentary type.

G. Selector switches shall be equipped with nameplates indicating the function of each of their positions as noted in the list of electric motors and motor controls.

H. Pilot lights shall be transformer type with 6-volt bulbs and shall be equipped with nameplates indicating the operating conditions they annunciate as noted in the list of electric motors and motor controls.

I. Pushbuttons shall be equipped with nameplates indicating their functions as noted in the list of electric motors and motor controls.

J. Devices such as pushbuttons, pilot lights and selector switches, where mounted in enclosures other than the cover of the starter, shall be equipped with nameplates indicating the motor with which they are associated.

END OF SECTION 23 00 00

SECTION 23 00 50

VIBRATION ISOLATION AND SEISMIC RESTRAINTS FOR ALL MEP WORK

PART 1 - GENERAL

1. 1 RELATED DOCUMENTS

A. For the Project's "General Document" apply to work specified in this Section and Sections 23 00 00 thru 23 95 00- consult them in detail for applicable instructions.

B. Manufacturers referenced in the technical specifications are for the purpose of establishing a standard of quality. Alternate manufacturers providing the same quality equipment will be given consideration by the Engineer and Architect if they are notified in writing per General Conditions.

C. This Section applies equally and specifically to all Contractors and Subcontractors supplying labor and/or equipment and/or materials as required under the Heating, Ventilating and Air Conditioning, Plumbing, Sprinkler and Electrical Sections of the Specifications.

D. Section 23 00 00 - Special Requirements for Mechanical and Electrical Work shall apply.

1.2 GENERAL

A. This specification combines vibration control and seismic restraints where applicable, with the new wind load requirements for all roof mounted equipment in any location. Additionally included are provisions for flood control as stated herein. When projects are located in a geographically active seismic, wind or flood location, Article 1.05, General Design & Performance Requirements will elaborate on those requirements and include requirements pertaining to a facilities "continued operation". Article 1.05, Paragraph C is a partial list of components covered herein. This specification is part of the general conditions for the Plumbing, Fire Protection and Electrical contracts. This is an In-Patient Care Building with an Occupancy/Risk Category IV, Seismic Design Category Project unless otherwise designated by the Architect.

1. All equipment, piping, ductwork and conduit as noted on the drawings schedule or in the specification shall be seismically braced if the building is classified as listed herein. Vibration control shall apply as described in all cases herein.
2. All roof mounted components shall comply with section 1609, Wind Load requirements of IBC-2021. There shall be no decrease of the effects of wind load on a component due to other structures or components acting as blocks or screens.
3. All below, at grade or above grade locations located in a flood hazard area as defined and located herein.
4. Seismic bracing, wind, flood load and isolation materials shall be the certified products of the same manufacturing group and shall be certified by that group.
5. It is the intent of the seismic and wind load portion of this specification to keep all mechanical, electrical, plumbing and fire protection building system components in place during a seismic or high wind event and additionally operational where the occupancy category of the building so requires as listed herein.
6. All such systems must be installed in strict accordance with seismic / wind codes, component manufacturer's and building construction standards. Whenever a conflict occurs between the manufacturers or construction standards, the most stringent installation practice shall apply.
7. This specification is considered to be minimum requirements for seismic, wind, flood and vibration control considerations.
8. Any variation which results in non-compliance with the specification requirements shall be corrected by the contractor in an approved manner.

B. The work in this section includes, but is not limited to the following:

1. Vibration isolation for piping, ductwork, conduit and equipment all referred to as components.
2. Equipment isolation bases.
3. Seismic restraints for isolated equipment.
4. Seismic restraints for non-isolated equipment.
5. Wind restraints for isolated and non-isolated equipment.

6. Flood restraints for isolated equipment.
7. Flood restraints for non-isolated equipment.
9. Certification of seismic, wind or flood restraint designs and installation supervision and sign off by a New Jersey Professional Engineer.
10. Certification of seismic attachment of housekeeping pads.
11. All equipment (components) requiring IBC compliance.
12. All inspection and test procedures for equipment (components) requiring IBC compliance.

C. All mechanical, electrical, plumbing or fire protection equipment and pipe, within on or outdoors of the building. Equipment buried underground is included if essential to the building's function. Entry of services to the building, up to but not including the utility connection, is part of this Specification.

Equipment referred to below is typical. (Equipment not listed is still included in this specification.) All systems listed in this paragraph or are part of the structure in any way are referred to as components.

AC Units
Air Handling Units
Air Separators
Battery Chargers
Battery Racks
Boilers
Bus Ducts
Cabinet Unit Heaters
Chillers
Compressors
Computer Room Units
Generators
Curbs
Electrical Panels
Fans (all types)
Fan Coil Units
Fire Alarm Panels
Heat Exchangers
Humidifiers
Light Fixtures
Motor Control Centers
Ductwork
Pipe
Pumps (all types)
Risers
Rooftop Units
Supports
Switch Gear
Tanks (all types)
Transformers
Unit Heaters
Ventilators
Variable Frequency Drives
Vibration Isolators
Water Heaters

1.3 RELATED DOCUMENTS

Drawings and general conditions of the contract, including General Conditions and Division 1 Specification Section apply to this section. In the event that this section conflicts with the isolation or seismic requirements of other sections, the more stringent criteria stated herein shall apply.

1.4. DEFINITIONS (building & components), all codes.

A. ESSENTIAL FACILITIES – Occupancy/Risk Category IV

1. Buildings and other structures that are intended to remain operational in the event of extreme environmental loading from flood, wind, snow or earthquakes.

B. LIFE SAFETY & HIGH HAZARD – Component Importance Factor (IP) of 1.5

1. All systems involved with fire protection including sprinkler piping, jockey pumps, fire pumps, control panels, service water supply piping, water tanks, fire dampers and smoke exhaust systems and fire alarm panels. (Life Safety)

2. All mechanical, electrical, plumbing or fire protection systems that support the operation of or are connected to emergency power equipment including all lighting, generators, transfer switches and transformers. (Life Safety)

3. All medical and life support systems. (Life Safety)

4. Hospital heating systems and air conditioning systems for maintaining normal ambient temperature. (Life Safety)

5. Automated supply, exhaust, fresh air and relief air systems on emergency control sequence including air handlers, duct, dampers, etc. or manually operated systems used for smoke evacuation, purge or fresh air relief by the fire department. (Life Safety)

6. All gases or fluids which must be contained in a closed system which are flammable or combustible. Any gas which poses a health hazard if released into the environment. (High Hazard)

7. Heating systems in any facility in Occupancy Risk Category IV, where the ambient temperature can fall below 32 degrees Fahrenheit.

C. GENERAL

Anchor: A device, such as an expansion bolt, for connecting duct or pipe bracing members into the structure of a building.

Approved Agency: An established and recognized agency regularly engaged in conducting tests or furnishing inspection services, when such agency has been approved.

Attachment: see Positive Attachment below.

Basic Wind Speed: The basic wind speed, in mph, for determination of the wind loads shall be as per IBC. Local jurisdictions shall determine wind speeds for indicated special wind regions located near gorges or mountainous terrain. ASCE-7 shall be used after determination of basic wind speed by the local jurisdiction. Bracing: Metal channels, cables or hanger angles that prevent ducts and pipes and/or equipment components from breaking away from the structure during an earthquake or high winds. See also Longitudinal Bracing and Tranverse Bracing. Together, they resist lateral loads from any direction.

Certificate of Compliance: A certificate stating that materials and products meet specified standards or that work was done in compliance with approved construction documents, provided by an approved agency. (Issued by equipment component manufacturer)

Component: A part or element of an architectural, electrical, mechanical, or structural system within or without a building system.

Component, equipment: A mechanical or electrical component or element that is part of a mechanical and/or electrical system within or without a building system.

Component, flexible: Component, including its attachments, having a fundamental period greater than 0.06 seconds.

Component, rigid: Component, including its attachments, having a fundamental period less than or equal to 0.06 seconds.

Dynamic properties of piping: The tendency of pipe to change in weight and size because of the movement and temperature of fluids in them. This does not refer to movement due to seismic forces.

Equipment: Systems associated with ducts, pipes and conduit, also called components.

Flood or Flooding: A general and temporary condition of partial and complete inundation of normally dry land from:

1. The overflow of inland or tidal waters.

2. The unusual and rapid accumulation of runoff of surface waters from any source.

Flood Hazard Area: The greater of the following of two areas:

The area within a flood plain, subject to a 1-percent or greater chance of flooding in any year. The area designated as a flood hazard area on a community's flood hazard map, or otherwise legally designated.

Flood Hazard Area Subject to High Velocity Wave Action: Area within the flood hazard area that is subject to high velocity wave action and shown on a Flood Insurance Rate Map (FIRM) or other flood hazard map as zone V, VO, VE or VI-30.

Flood Insurance Rate Map (FIRM): An official map of a community on which the Federal Emergency Management Agency (FEMA) has delineated both the special flood hazard areas and the risk premium, zones applicable to the community.

Gas pipes: For the purposes of this Specification Guide, gas pipe is any pipe that carries fuel gas, fuel oil, medical gas, or compressed air.

Hazardous Contents: A material that is highly toxic or potentially explosive and in sufficient quantity to pose a significant life-safety threat to the general public if an uncontrolled release were to occur.

Hurricane Prone Regions: Areas prone to hurricanes include the U.S. Atlantic Ocean, Gulf Coasts, Hawaii, Puerto Rico, Guam, Virgin Islands, and American Samoa where the wind speed is greater than 90 mph.

Inspection Certificate: An identification applied on a product by an approved agency containing the name of the manufacturer, the function and performance characteristics, and the name and identification of an approved agency that indicates that the product or material has been inspected and evaluated by an approved agency *(see Section 1703.5 and "Label" and "Manufacturer's Designation and "Mark").*

Label: An identification applied on a product by the manufacturer that contains the name of the manufacturer, the function and performance characteristics of the product or material, and the name and identification of an approved agency and that indicates that the representative sample of the product or material has been tested and evaluated by an approved agency *(see Section 1703.5 and "Inspection Certificate" and "Manufacturer's Designation and "Mark").*

Lateral forces: Force acting on a duct or pipe in the horizontal plane. This force can be in any direction.

Longitudinal bracing: Bracing that prevents a duct or pipe from moving in the direction of its run.

Longitudinal force: An applied force that happens to be in the same direction as the duct or pipe run.

Manufacturer's Designation: An identification applied on a product by the manufacturer indicating that a product or material complies with a specified standard or set of rules (see also "Inspection Certificate" and "Label").

Occupancy Risk Category: A classification used to determine structural load requirements including those imposed by wind, flood, snow and seismic based on occupancy of the structure.

Occupancy Importance Factor: A factor assigned to each structure according to its User Group.

Positive Attachment: A mechanical device, designed to resist seismic forces that connects a non-structural element, such as a duct, to a structural element, such as a beam. Bolts and welding are examples of positive attachments. Glue and friction anchorage does not constitute positive attachment. Examples of positive attachment are epoxy cast in anchors and drill in wedge shaped anchor bolts to concrete and welded or bolted connections directly to the building structure. Double sided beam clamps only loaded perpendicular to the beam are also acceptable. Single side beam clamps, C type are not acceptable as either brace point attachments to the structure or for the support of the component at the bracing location.

Seismic Design Category: A classification assigned to a structure based on its Seismic Use Group or Occupancy Risk Category and the severity of the design earthquake ground motion at the site.

Seismic Forces: The assumed forces prescribed herein, related to the response of the structure to earthquake motions, to be used in the design of the structure and its components.

Seismic Use Group, Occupancy Category, IBC-2018: A classification assigned to a building based on its use as defined in *Section 1604.5.*

Seismic: (adj.) Related to an earthquake. Seismic loads on a structure are caused by wave movements in the earth during an earthquake.

Site Class: A classification assigned to a site based on the types of soils present and their engineering properties as defined in *Section 1615.15.52, (IBC-2018).*

Special Inspection, Continuous: The full-time observation of work requiring special inspection by an approved special inspector who is present in the area where the work is being performed.

Special Inspection, Periodic: The part-time or intermittent observation of work requiring special inspection by an approved special inspector who is present in the area where the work has been or is being performed and at the completion of the work.

Special Inspection: Inspection as herein required of the materials, installation, fabrication, election or placement of components and connections requiring special documents and referenced standards.

Story Drift Ratio: The story drift divided by the story height.

Transverse bracing: Bracing that prevents a duct or pipe from moving from side to side.
Wind-Borne Debris Region: Portions of hurricane-prone regions that are within 1 mile of the coastal mean high-water line where the basic wind speed is 110 mph or greater, or portions of hurricane-prone regions where the basic speed is 120 mph or greater or Hawaii.

1.5 GENERAL DESIGN & PERFORMANCE REQUIREMENTS

A. General design requirements.

1. SEISMIC CONSIDERATIONS: This project has design requirements as follows:
   a) All components and additionally, components requiring a manufacturer's
   b) Certificate of Compliance to prove, "on line capability".

2. WIND CONSIDERATIONS: This project has design requirements as follows
   a) Wind load in hurricane and or wind-born debris regions having a building height-less than 60 feet.

3. FLOOD CONSIDERATIONS: This project has design requirements in accordance with FEMA and or FIRM (Flood Insurance Rate Map) as follows:
   a) Flood Hazard Area

B. General Performance Requirements

1. Seismic & Wind Load Certification and Analysis:

a) Calculations by the Manufacturer's qualified licensed Engineer substantiating the mounting system, seismic or wind restraints and recommended anchor bolts shall be submitted for approval along with the shop drawings. Seismic loads shall have their calculations based on seismic loads as established in article *1.5 paragraph B.5,"Design Seismic Loads".* Wind loads shall have their calculations based on paragraph B.6 " *Design Wind Loads".* All analysis shall be stamped by a registered professional having a PE from the same state as the project.

b) Unless otherwise specified, all equipment, piping and ductwork shall be restrained to resist seismic forces. Restraints shall maintain equipment, piping or ductwork in a captive position. Restraint devices shall be designed and selected to meet seismic requirements as defined in the latest issue of:

NFPA, (fire protection only).
IBC International Building Code 2018

2. Occupancy Category IV, IBC-2021

In addition to all of the above provisions, projects that are Occupancy Category IV, IBC-2018 all trades shall comply with sections 16 & 17 of the International Building Code using when available, vendors that comply with the provisions stated herein and submitting the special inspections listed within these specifications. Where compliance is not possible, each contractor shall submit a vendor report, (Form CVC-1 at end of this specification) clearly indicating that none of the specified, listed or other vendors known to the contractors meet

the compliance, testing and certification portions of the IBC specifications Section 16 and 17 Special inspections of the component installation shall still be conducted, even if no vendors meet the following requirements. All non-isolated and isolated equipment, (components) shall be secured to the structure in accordance with that code.

a) All component manufacturers will submit for approval the following as listed below:

1) All <u>life safety system</u> components noted in this specification will have the manufacturer of that component submit the Approved Agencies Certificate of Compliance for the specific equipment on this project when the Seismic Design Category is "C–F". Analytical or Shaker Test certification through the component's load path including structure at its center of gravity shall include *<u>anchorage</u>, <u>structural</u>* and *<u>online capability.</u>* Use of historical data shall be permitted if evidence confirms historical based component having the same construction and weight with accompanying center of gravity as submitted unit and basis of historical claim conforms to loads derived in testing with accompanying accelerations based on AC-156.

2) In addition, all components needed for the continued operation of the facility in the above stated categories will have the manufacturer of that component submit the Approved Agency's Certificate of Compliance for their equipment when the Seismic Design Category is "C-F". Analytical or Shaker Test certification through the component's load path to structure at its center of gravity shall include on line capability. This requirement also pertains to projects that combine an emergency preparedness center within a structure of another Use Group. Where components do not effect the facilities functional operation but could effect the performance of other components should they dislodge, only anchorage of that component requires compliance. Components needed for continued operation of the building require Analytical or Shaker Test certification through the total component's load path to structure calculated at its center of gravity. Testing shall prove, *<u>anchorage</u>, <u>structural</u>* and *<u>on line capability</u>*. For use of historical data, see above, (1).

3) All Components Containing Hazardous or Flammable materials will have the manufacturer of that component submit the Approved Agency's Certificate of Compliance for their equipment when used on any project having a minimum Seismic Design Category of "C-F". Testing shall be conducted by Analytical or Shaker Test through the total component's load path to structure at its center of gravity and shall prove anchorage, structural capability and hazardous material containment.

Testing shall prove that no internal component will rupture to insure against loss of hazardous or flammable (explosive) material which could support combustion, ignite or contaminate.

4) All components requiring anchorage compliance only not listed in the above categories shall have the manufacturer of each component submit a PE stamped calculation package that their project specific equipment will accept anchorage through the component's load path to structure at its center of gravity at the designated anchorage locations. This requirement is for all projects having a Seismic Design Category of C-F.

3. SPECIAL & PERIODIC INSPECTION
The following systems shall require Special Inspection and Periodic Special Inspection for anchorage during the course of construction, as defined earlier in this section for all buildings in Seismic Design Categories C-F.

a) All smoke control systems. Periodic Special Inspection during erection of ductwork and prior to concealment, for leakage testing. Additionally, prior to occupancy for pressure differential testing.

b) All electrical components for standby or emergency power systems require Periodic Special inspection. *

c) All electrical equipment in Seismic Design Categories E and F. (Periodic)*

d) All flammable, combustible and highly toxic piping and their associated mechanical systems. (Periodic)

e) All ductwork containing hazardous materials. (Periodic) *

f) All equipment using combustible or toxic energy sources. (Special^{-1})

g) All electric motors, transformers, switchgear unit substations and motor control centers. (Special^{-1})

h). Reciprocating and rotating type machinery. (Special^{-1})

i). Pipe, 3" & larger. (Special^{-1})

j) Tanks, heat exchangers & pressure vessels. (Special^{-1})

k). Isolator units for seismic isolation system (Periodic)*

l). Manufacturer's Quality Control Program for projects in Seismic Design Categories E or F.

4. Contractor Responsibilities and Approvals:

a) Each contractor responsible for the installation of the components asterisked above, (*) shall be responsible for submitting to the design team for their approval, a written contractor's Statement of Responsibility, (IBC Section 1706.1) as outlined below. In addition all (-1) items above require special inspection in accordance with IBC Section 1707.8 (Form CQAP & SQA-1) at the end of this specification.

b) Identify the components that are part of the Quality Assurance Plan. (asterisked above)*

c) Identify all Special Inspection and Testing for components installed as part of this contract.

d) List control procedures within the contractor's organization for all special inspection and testing including methods, frequency of reporting and their distribution of those reports.

e) List personnel and their qualifications exercising control over the seismic aspects of the project.

5. Design Seismic Loads:

a) Testing or calculations (including the combining of tensile and shear loadings) to support seismic restraint designs must be stamped by a registered PE with at least five years of seismic design experience and

licensed in the state of the job location. Testing and calculations must include shear and tensile loads as well as one test or analysis at 45° to the weakest mode. IBC Component testing must be by an Approved Agency.

b) Analysis for anchorage must indicate calculated dead loads, static seismic loads and capacity of materials utilized for connections to equipment and structure. Analysis must detail anchoring methods, bolt diameter, embedment and/or welded length. All seismic restraint devices shall be designed to accept, without failure, the forces detailed in Section 4 acting through the equipment center of gravity. Overturning moments may exceed forces at ground level.

c) Internally isolated equipment in lieu of specified isolation and restraint systems must meet all of the requirements of section 4, all articles.

d) A seismic design Errors and Omissions insurance certificate MUST accompany the equipment manufacturer's certification. Product liability insurance certificates are not acceptable.

e) In the event that the equipment is internally isolated and restrained, the entire unit assembly must be seismically attached to the structure. Curb or roof rail mounted equipment must not only have seismic or wind attachment of the equipment to the roof but also to the curb or rails. The attachment and certification thereof shall be by this section. Sheet metal screw attachment is acceptable provided that the following three conditions are met and verified.

- Calculations support sufficient quantity & size of sheet metal screws to handle all loads including shear.
- Space or gap between the inside overhang of the rooftop unit and the curb at each of the screw locations is closed with structural material, tapered to contour to both the curb and the components inside edge structure.
- The method of attachment does not violate the NRCA rating of the curb by violating the roofs member waterproofing.

f) Failure is defined as the discontinuance of any attachment point between equipment or structure. Permanent deformation is acceptable as long as the component continues to operate without failure and if permanent, it is within acceptable manufacturing or structural tolerances.

6. Design Wind Loads

a) All outdoor mounted components shall be positively fastened to their supporting structure as discussed below.

- If curb or equipment support mounted, article 1.05 paragraph 5h, Design Seismic Loads, shall be followed for all roof mounted components in excess of 9 sq. ft. in area. Curbs shall be as described in Base Type B-3 if isolated, Base type B-4 if non isolated.
- If equipment is support mounted, article 1.05, Design Seismic Loads paragraph 5h. shall be followed for all roof mounted components requiring waterproofed rail supports. Equipment supports shall be Base type B-5 if isolated, Base type B-6 if non isolated.
- If equipment is dunnage mounted, positive attachment will occur through welding or bolting of equipment to dunnage steel.

b) Loads and calculations shall be based on IBC-2006, figure 1609 and relating sections in ASCE7-05.

c) Where buildings are less than 60 feet in height, loads on roof mounted components shall be based on Section 6.5.15.1, ASCE-7-05.

d) Equivalent basic wind speed shall be based on IBC-2009, Table 1609.3.1.

e) In no event shall adjacent buildings, structures or screens be considered to diminish the calculated wind load or its effect on an outdoor component.

7. Design Flood Loads

a) When a building or structure is located in a flood hazard area, anchorage for all components subjected to those locations shall follow article 1.05, paragraph 2 d. for their proper fastening to structure.

b) Components used for anchorage purposes shall be hot dipped galvanized, cadmium plated or powder coated for the purpose of anticorrosion.

8. Additional Seismic Design Requirements for Fire Protection Components.

a. Fire sprinkler piping system shall be braced meeting the minimum requirements of NFPA No. 13. Additionally, all branch lines will be braced for structures in Occupancy Category IV.
b. All branch lines shall be end tied if not braced.
c. Standpipe risers shall be provided with a minimum of (1) flexible coupling, (Victaulic Style 77 or equal) to accommodate lateral drift at each floor level.
d. Vertical pipe risers shall have their weight where possible supported above the center of gravity of the riser. Provide lateral guides at the top and bottom of the riser and at intermediate points not to exceed 30'.
e. Friction connections of any fire protection line to structure is not permissible under any circumstances. All connections must be positive.
f. Branch lines can never act as a brace to mains.
g. All pipe sleeves either vertical or horizontal through walls or floors shall be designed to accommodate differential movement.

1.6 SUBMITTAL DATA REQUIREMENTS

A. Refer to Part I.02 General.

B. The manufacturer of vibration isolation, seismic, wind and flood restraints shall provide submittals for products as follows:

1. Descriptive Data:

a. Catalog cuts or data sheets on vibration isolators and specific restraints detailing compliance with the specification.

b. Detailed schedules of flexible and rigidly mounted equipment, showing vibration isolators and restraints by referencing numbered descriptive drawings.

2. Shop Drawings:

a. Submit fabrication details for equipment bases including dimensions, structural member sizes and support point locations.

b. Provide all details of suspension and support for ceiling hung equipment.

c. Where walls, floors, slabs or supplementary steel work are used for restraint locations, details of acceptable attachment methods for ducts and pipe must be included and approved before the condition is accepted for installation. Restraint manufacturer's submittals must include spacing, static loads and seismic/wind loads at all attachment and support points.

d. Provide specific details of restraints and anchors; include number, size and locations for each piece of equipment.

3. Calculations shall be submitted as required in Section 1.4, General Design Performance Requirements.

1.7 RELATED WORK

A. Housekeeping pad design shall be in accordance with concrete design specifications. Attachment shall be designed and certified according to this section by the seismic/isolation supplier. Material and labor required for attachment and construction shall be by the concrete section contractor, or by this contractor where specified. Housekeeping pads shall be sized to accommodate a minimum of 6“ of clearance all around the equipment or 12 times the anchor bolt diameter, whichever is greater. Where exterior isolators are used, this distance shall be as measured from the outer most holes in the isolator base plate to the edge of the housekeeping pad.

B. The project’s structural engineer shall design all roof and interior steel to support and make connections to all components, including roof-mounted equipment specified in other sections. Design shall comply with IBC requirements including load path to structure.

C. Roof steel supporting roof-mounted equipment shall be designed for all seismic and wind forces including, but not limited to, tension, compression and moment loads.

D. Chimneys, stacks and boiler breeching passing through floors are to be bolted at each floor level or secured above and below each floor with riser clamps.

E. Where ceiling are not braced lighting fixtures shall have independent 4 corner diagonal wire ties to structure.

F. Lay-in ceilings in compliance with seismic zone requirements may use earthquake clips or other approved means of positive attachment to brace fixtures such as panel light and diffusers less than 75 pounds to T-bar structures. Local codes dictate fixture support requirements.

1.8 CODE AND STANDARDS REQUIREMENTS

A. Typical Applicable Codes and Standards
1. All City, State and Local Codes (Code)
2. SMACNA Guidelines for Seismic Restraint of Mechanical Systems (To be used as a Standard, not a code)
3. NFPA 13 and 14 for Fire Protection System (Standard)
4. American Society for Testing and Materials (ASTM) (Standard)
5. International Building Code (Code)
6. ASHRAE (Standard)
7. ASCE

B. In cases where requirements vary, the guideline for the most stringent shall be utilized.

C. Use IBC-2018 as reference code standard unless otherwise designated.

Manufacturer of vibration isolation, seismic and wind load control equipment shall have the following responsibilities:

1. Determine vibration isolation and restraint sizes and locations.
2. Provide vibration isolation and restraints as scheduled or specified.
3. Provide calculations and materials if required for restraint of unisolated equipment.
4. Provide installation instructions, drawings and trained field supervision to insure proper installation and performance.
5. Certify correctness of installation upon completion.
6. All provisions of article 1.05, General Design & Performance

B. All manufacturers including Original Equipment Manufacturer (OEM) providing equipment and/or vibration control, seismic, wind or flood restraint systems must provide a Seismic Design Error and Omissions Insurance Certificate for their firm or their design consultant to certify their ability to provide engineering and design as required by this section.

C. All manufacturers of any type of equipment including Original Equipment Manufacturers (OEM) are responsible for Article 1.05.

D. Equipment manufacturers’ substitution of internally or externally isolated and or restrained equipment supplied by the equipment vendor, in lieu of the isolation and restraints specified in this section, is acceptable provided all conditions of this section are met. The Equipment

manufacturer shall provide a letter of guarantee from their Engineering Department PE stamped and certified per the article on Seismic Restraint Design (See Article 1.05, Paragraph B2), stating that the seismic restraints are in full compliance with these specifications. Where used on an Essential or High Hazard Facility, IBC -2009 is required, manufacturer's certification proving on line capability shall be in addition to all requirements which are stated in Article 1.05, Paragraph B.

E. Letters from field offices or representatives are unacceptable. All costs for converting to the specified vibration isolation and/or restraints shall be borne by the equipment vendor in the event of non-compliance with the preceding. Substitution of internal isolation is unacceptable for:

Indoor or outdoor mounted equipment over or adjacent to:

- Patient or operating areas
- Theatre space
- Office locations
- Assembly areas

PART 2 - PRODUCTS

2.1 DESCRIPTION

A. All vibration isolators and seismic restraints described in this section shall be the product of a single manufacturer. The basis of this specification is Vibro Acoustics (V-A), or Vibration Mountings & Controls. Products from other nationally recognized manufacturers are acceptable provided their systems strictly comply with these specifications and have the approval of the specifying engineer. (See Form VL-1 listing other manufacturers to be considered for use on this project)

2.2 VIBRATION ISOLATION TYPES

A. Type A: Spring Isolator - Free Standing
V-A: ASC
AB: FS

1. Spring isolators shall be free standing and laterally stable without any housing and complete with a molded neoprene cup or 1/4" neoprene acoustical friction pad between the base plate and the support.
2. All mountings shall have leveling bolts that must be rigidly bolted to the equipment.
3. Spring diameters shall be no less than 0.8 of the compressed height of the spring at rated load.
4. Springs shall have a minimum additional travel to solid equal to 50% of the rated deflection.
5. Submittals shall include spring diameters, deflection, compressed spring height and solid spring height.

B. Type B: Seismically and Wind Restrained Spring Isolator
VMC: AMSR, ASCM
V-A: CSR/SCSR

1. Restrained spring mountings shall have a Type A spring isolator within a rigid housing that includes vertical limit stops to prevent spring extension when weight is removed. The housing shall serve as blocking during erection. A steel spacer shall be removed after adjustment. Installed and operating heights are equal. A minimum clearance of 1/4" shall be maintained around restraining bolts and internal neoprene deceleration bushings so as not to interfere with the spring action. Limit stops shall be out of contact during normal operation. Since housings will be bolted or welded in position there must be an internal isolation pad. Housing shall be designed to resist all seismic and/or wind forces.

C. Type C: Combination Spring/Elastomer Hanger Isolator (30° Type)
VMC: HRSA
V-A: SHR

1. Hangers shall consist of rigid steel frames containing minimum 1 1/4" thick neoprene elements at the top and a steel spring with general characteristics as in Type A. The Durolene element shall have resilient bushings projecting through the steel box.
2. Spring diameters and hanger box lower hole sizes shall be large enough to permit the hanger rod to swing through a 30° arc from side to side before contacting the rod bushing and short circuiting the spring.
3. Submittals shall include a hanger-drawing showing the 30° capabilities.
4. Hanger locations requiring pre-compression for holding piping at fixed elevation shall be type pre-compressed for all manufacturers.

D. Type D: Elastomer Double Deflection Hanger Isolator
VMC: HR
V-A: NH
1. Molded (minimum 1 1/4" thick) Durolene element with projecting bushing lining the rod clearance hole. Static deflection at rated load shall be a minimum of 0.35".
2. Steel retainer box encasing neoprene mounting capable of supporting equipment up to four times the rated capacity of the element.

E. Type E: Combination Spring/Elastomer Hanger Isolator
VMC: HRS
V-A: SHR
1. Spring and Durolene elements in a steel retainer box with the features as described for Type C and D isolators.
2. Hanger locations requiring pre-compression for holding piping at fixed elevation shall be type pre-compressed for all manufacturers.
3. 30° angularity feature is not required.

F. Type F: Seismically Restrained Elastomer Floor Isolator
VMC: RSM
V-A: SRD
1. Bridge-bearing neoprene mountings shall have a minimum static deflection of 0.2" and all directional seismic capability. The mount shall consist of a ductile iron or aluminum casting containing two separated and opposing molded neoprene elements. The elements shall prevent the central threaded sleeve and attachment bolt from contacting the casting during normal operation. The shock absorbing neoprene materials shall be compounded to bridge-bearing specifications.

G. Type G: Pad Type Elastomer Isolator (Standard)
VMC: Maxiflex
V-A: NeoPlus
1. One layer of 3/4" thick neoprene pad consisting of 2" square modules for size required.
2. Load distribution plates shall be used as required.
3. Bolting required for seismic compliance. Neoprene and duck washers and bushings shall be provided to prevent short-circuiting.

H. Type H: Pad Type Elastomer Isolator (High Density)
VMC: Fabriflex
AB: NDB
1. Laminated canvas duck & neoprene, maximum loading 1000 psi, minimum 1/2" thick.
2. Load distribution plate shall be used as required.
3. Bolting required for seismic compliance. Neoprene and duck washers and bushings shall be provided to prevent short-circuiting.

I. Type I: Thrust Restraints
VMC: RSHTR
V-A: AHCS
1. A spring element similar to Type A isolator shall be combined with steel angles, backup plates, threaded rod, washers and nuts to produce a pair of devices capable of limiting movement of air handling equipment to 1/4".
2. Restraint shall be easily converted in the field from compression type to tension type.
3. Unit shall be factory precompressed.
4. Thrust restraints shall be installed on all cabinet fan heads, axial or centrifugal fans whose thrust exceeds 10% of unit weight.

J. Type J: Pipe Anchors
VMC: MDPA
V-A: ANCH
1. All-directional acoustical pipe anchor, consisting of two sizes of steel tubing separated by a minimum 1/2" thick 60 durometer neoprene.

2. Vertical restraint shall be provided by similar material arranged to prevent vertical travel in either direction.
3. Allowable loads on the isolation material should not exceed 500 psi and the design shall be balanced for equal resistance in any direction.

K. Type K: Pipe Guides
VMC: PG
V-A: SPG
1. Pipe guides shall consist of a telescopic arrangement of two sizes of steel tubing separated by a minimum 1/2" thickness of 60-durometer neoprene.
2. The height of the guides shall be preset with a shear pin to allow vertical motion due to pipe expansion or contraction. Shear pin shall be removable and reinsertable to allow for selection of pipe movement.
3. Guides shall be capable of + 1 5/8" motion, or to meet location requirements.

2.3 SEISMIC RESTRAINT TYPES

A. Type I: Spring Isolator, Restrained
VMC: ASCM, AWR
V-A: CSR/SGSR
1. Refer to vibration isolation Type B.

B. Type II: Seismically Restrained Elastomer Floor Isolator
VMC: RSM RUD
V-A: SRO
1. Refer to vibration isolation Type F.

C. Type III: All-Directional Seismic Snubber
VMC: SR
V-A: Snubber
1. All- molded neoprene bushing of bridge bearing neoprene. Bushing shall be replaceable and a minimum of 1/4 inch thick. Rated loadings shall not exceed 1000 psi. A minimum air gap of 1/8 inch shall be incorporated in the snubber directional seismic snubbers shall consist of interlocking steel members restrained by a one-piece design in all directions before contact is made between the rigid and resilient surfaces.

Snubber end caps shall be removable to allow inspection of internal clearances. Neoprene bushings shall be rotated to insure no short circuits exist before systems are activated.

D. Type IV: Floor or Roof Anchorage
VMC: FA
V-A: Anchor
1. Rigid attachment to structure utilizing wedge type anchor bolts, anchored plates machine screw, bolting or welding. Powder shots are unacceptable.

E. Type V: Seismic Cable Restraints
VMC: SCR
V-A: BB/BBR
1. Seismic Cable Restraints shall consist of galvanized steel aircraft cables sized to resist seismic loads with a minimum safety factor of 2 and arranged to provide all-directional restraint. Cable end connections shall be steel assemblies that swivel to final installation angle and utilize 2 clamping bolts to provide proper cable engagement. Cables must not be allowed to bend across sharp edges. Single arm braces with resilient bushings can be substituted for seismic cable restraints. Deck fitting shall have two through bolts spaced to ICBO standards for attachment to concrete!

F. Type VI: Rigid Arm Brace
VMC: SAB
V-A: RRK
1. Seismic solid braces shall consist of steel angles or channels to resist seismic loads with a minimum safety factor of 2 and arranged to provide all directional restraint. Seismic solid brace end connectors shall be steel assemblies that swivel to the final installation angle and utilize 2 through bolts to provide proper attachment spaced to ICBO standards for attachment to concrete.

G. Type VII: Internal Clevis Cross Brace
1. Internal clevis cross braces at seismic locations shall be pre-cut pipe sized for internal clevis dimensions.

H. Type VIII: Seismic Waterproof Foundation Wall Sleeve
1. Seismic waterproof foundation wall sleeves shall consist of two elastomeric sleeves that shall be mounted both inside and out of the vertical foundation wall. The conical design shall have a suitably waterproof means of fastening to both concrete and to its concentric utility pipe. Allowable vertical drift shall be plus or minus 2” from the installed neutral point along the vertical “y” axis. All fittings shall be stainless steel or galvanized.

2.4 EQUIPMENT BASES

A. General
1. All curbs and roof rails are to be bolted or welded to the building steel or anchored to the concrete deck (minimum thickness shall be 4") for resisting wind and seismic load forces in accordance with the project location. (Fastening to metal deck is unacceptable.)

B. Base Types
1. Type B-1: Integral Structural Steel Base
VMC: WFB
V-A: IFB/CTB
a. Rectangular bases are preferred for all equipment.

b. Centrifugal refrigeration machines and pump bases may be T or L shaped where space is a problem. Pump bases for split case pump shall include supports for suction and discharge elbows.

c. All perimeter members shall be steel beams with a minimum depth equal to 1/12 of the longest dimension of the base.

d. Base depth need not exceed 12" provided that the deflection and misalignment is kept within acceptable limits as determined by the manufacturer.

e. Height saving brackets shall be employed in all mounting locations to provide a minimum base clearance of 2".

2. Type B-2: Concrete Inertia Base
VMC: MPF/WPF
V-A: CIB
a. Vibration isolation manufacturer shall furnish rectangular welded or bolted modular steel concrete pouring forms for floating and inertia foundations.

b. Bases for split case pumps shall be large enough to provide for suction and discharge elbows.

c. Bases shall be a minimum of 1/12 of the longest dimension of the base but not less than 6".

d. The base depth need not exceed 12" unless specifically recommended by the base manufacturer for mass or rigidity.

e. Forms shall include minimum concrete reinforcing consisting of 1/2" bars welded in place a maximum of 8” on centers running both ways in a layer 1-1/2" above the bottom.

f. Forms shall be furnished with steel templates to hold the anchor bolts sleeves and anchors while concrete is being poured.

g. Height saving brackets shall be employed in all mounting locations to maintain a 2" minimum clearance below the base.

h. Flush profile wooden formed bases having correct depth and reinforcing requirements are acceptable.

3. Type B-3: Seismic Isolation Curb
   VMC: P62/P6300
   V-A: VCR
   Option Sound Package 1&2
   a. Curb mounted rooftop equipment shown on isolation schedule shall be mounted on structural seismic spring isolation curbs. The upper frame must provide continuous support for the equipment and must be captive so as to resiliently resist wind and seismic forces. The lower frame must accept point support for both seismic attachment and leveling. The upper frame must be designed with positive fastening provisions (welding or bolting), to anchor the roof top unit to the curb, which will not violate the National Roofing Contractor's Association (NRCA) ratings of the membrane waterproofing. Sheetmetal screws are only acceptable if all provisions in Article 1.05 Paragraph B, 5h, Design Seismic Loads, are met. Contact points between the roof top unit, the curb and the building's structure shall show load path through those locations only.

   b. All directional neoprene snubber bushings shall be a minimum of 1/4" thick. Steel springs shall be laterally stable and rest on 1/4" thick neoprene acoustical pads or cups.

   c. Hardware must be plated and the springs provided with a rust resistant finish.

   d. The curbs waterproofing shall be designed to meet all NRCA requirements.

   e. All spring locations shall have access ports with removable waterproof covers and all isolators shall be adjustable, removable and interchangeable.
   f. The curb shall be the sound attenuating, open screen type utilizing standard 2" roof insulation supplied and installed by the roofing contractor to act thermally outside and acoustically inside, (TAS, open thermal acoustical screening system). Curbs supplied without this feature shall be factory acoustically lined with 2" duct liner.

   g. Isolated curbs shall be supplied with a continuous air seal between the upper floating member and the stationary wood hailer.

   Option #1
   Where sound barrier package is required, curb shall have full size lay in attenuation panels having a minimum STC rating of 60 when combined with the roof deck's rating. Attenuation system shall add a full sound attenuation structural floor to the curb capable of spanning the curb's width and designed for live loads of 20 psf. Panels shall not weigh more than 6 psf. The 4" nominal galvanized panel shall be joined to allow for airtight construction and additionally shall have a support system where the panels are used below an outside condenser section. Panels shall be waterproof for both outdoor and indoor application. The space below the curb panels and the roof deck shall have 4" of insulation contractor furnished and installed.

   Curb wall construction shall utilize the roofer's standard insulation where curbs use the TAS open thermal acoustical screening system. Solid wall curbs shall use 2" of factory ductliner installed by the curb manufacturer. The entire curb shall have a continuous neoprene air seal. Type RPFMA shall use an open return system with the roof return opening set as far as possible from the unit's return opening.

   Option # 2
   When curb type SRPFMA (Supply Return Plenum Construction) is required, in addition to Option # 1 the walls of the supply section will use 2" sound attenuating panels as well as a continuous inner neoprene air seal and isolated plenum divider. Both supply and return ducts shall seal directly to curb base floor attenuation panels.

4. Type B-4: Seismic Non-Isolated Curbs
   VMC: P6000
   V-A: RC
   Option: Sound Package
   a. Seismic curbs shall have all provisions as Type B-3 curbs with the exception of spring isolation.

5 Type B-5: Isolated Equipment Supports
   VMC: R7200/R7300
   a. Continuous structural equipment support rails that combine equipment support and isolation mounting into one utilized roof flashed assembly with all features as described for Type B-3.

b. System shall be designed for positive anchorage or welding of equipment to supports and welding of supports to the building steel.

6 Type B-6: Non-Isolated Equipment Supports
VMC: R7000
a. This shall have the same provisions as Type B-5 without the spring isolation.

7 Type B-7: Computer Room Unit Base
VMC: CRC
V-A: IFB
a. Computer Room air conditioning units shall be welded or bolted to welded structural steel stands having a minimum 0.5 “G” certified lateral acceleration capabilities.
b. Durolene elastomer isolated stands shall have 1” of adjustment to accommodate floor irregularities and .25” of static deflection.
c. Bolting or welding is required to meet seismic criteria.
d. Stands to have positive fastening provisions for bolting of computer room unit to seismic floor stand and fastening of seismic isolated floor stand to structure.

2.5 FLEXIBLE CONNECTORS

A. Type FC-2: Flexible Stainless Steel Hose
VMC: BS
V-A: FCSS
Flexible stainless steel hose shall have stainless steel braid and carbon steel fittings. Sizes 3" and larger shall be flanged. Smaller sizes shall have male nipples.

B. Type FC-2 connector shall be braided bronze for freon connections.
V-A: FCB

1. Minimum lengths shall be as tabulated:

Flanged		Male Nipples	
3 x 14	10 x 26	1/2 x 9	1½ x 13
4 x 15	12 x 28	3/4 x 10	2 x 14
5 x 19	14 x 30	1 x 11	2½ x 18
6 x 20	16 x 32	1¼ x 12	8 x 22

2. Hoses shall be installed on the equipment side of the shut-off valves horizontally and parallel to the equipment shafts wherever possible.

PART 3 - EXECUTION

3.1 EXAMINATION

A. All areas that will receive components requiring vibration control, seismic or wind load bracing shall be thoroughly examined for deficiencies that will affect their installation or performance. Such deficiencies shall be corrected prior to the installation of any such system.

B. Examine all “rough ins” including anchors and reinforcing prior to placement.

3.2 COMPONENT INSTALLATION (General)

A. All vibration isolators and seismic, wind restraint systems must be installed in strict accordance with the manufacturer’s written instructions and all certified submittal data.

B. Installation of vibration isolators and seismic, wind restraints must not cause any change of position of equipment, piping or ductwork resulting in stresses or misalignment.

C. No rigid connections between equipment and the building structure shall be made that degrades the noise and vibration control system specified herein.

D. The contractor shall not install any isolated equipment, piping or duct, which makes rigid connections with the building unless isolation is not specified. “Building” includes, but is not limited to, slabs, beams, columns, studs and walls.

E. Coordinate work with other trades to avoid rigid contact with the building.

F. Overstressing of the building structure must not occur because of overhead support of equipment. Contractor must submit loads to the structural engineer of record for approval. General bracing may occur from flanges of structural beams, upper truss cords in bar joist construction and cast in place inserts or wedge type drill-in concrete anchors.

G. Seismic cable restraints shall be installed slightly slack to avoid short circuiting the isolated suspended equipment or piping.

H. Seismic cable assemblies are installed taut on non-isolated systems. Seismic single arm braces may be used in place of cables on rigidly attached systems but can also be used on isolated systems when incorporating resilient bushings.

I. At locations where seismic cable restraints or seismic single arm braces are located, the support rods must be braced when necessary to accept compressive loads. See Table “E”.

J. At all locations where seismic cable braces and seismic cable restraints are attached to the pipe clevis, the clevis bolt must be reinforced with pipe clevis cross bolt braces or double inside nuts if required by seismic acceleration levels.

K. Vibration isolation manufacturer shall furnish integral structural steel bases as required. Independent steel rails are not permitted.

L. Where piping passes through walls, floors or ceilings, the contractor shall provide wall seals or resilient packed pipe sleeves.

M. Air handling equipment and centrifugal fans shall be protected against excessive displacement which results from high air thrust in relation to the equipment weight. Horizontal thrust restraints shall be those described in the specification when horizontal motion exceeds 3/8".

N. Special and Periodic Inspections for items listed in Article 1.05, Paragraph B shall be conducted and submitted on a timely basis.

3.3 EQUIPMENT INSTALLATION

A. Equipment shall be isolated and or restrained as per Tables A-E at the end of this section.

B. Place floor mounted equipment on 4" high minimum concrete housekeeping pads properly sized and doweled or expansion shielded to the deck to meet acceleration criteria (see Article 1.05). Anchor isolators and/or bases to housekeeping pads. Concrete work is specified under that section of the contract documents.

C. Additional Requirements

1. The minimum operating clearance under all isolated components bases shall be 2".
2. All bases shall be placed in position and supported temporarily by blocks or shims, as appropriate, prior to the installation of the equipment, isolators and restraints.
3. The equipment shall be installed on blocks to the operating height of the isolators. After the entire installation is complete and under full load including water, the isolators shall be adjusted so that the load is transferred from the blocks to the isolators. Remove all debris from beneath the equipment and verify that there are no short circuits of the isolation. The equipment shall be free in all directions.
4. Ceilings containing diffusers or lighting fixtures must meet seismic requirements by using earthquake clips of other approved means of positive attachment to secure diffuser and fixtures to T-bar structure.
5. All floor or wall mounted equipment and tanks shall be restrained with Type V restraints.

3.4 PIPING AND DUCTWORK ISOLATION

A. Vibration Isolation of Piping

HVAC Water Piping: All spring type isolation hangers shall be precompressed if isolators are installed prior to fluid charge. If installed afterwards, field precompressed isolators can be used. All HVAC piping in the machine room shall be isolated as well as pressurized runs in other locations of the building 6" and larger. Horizontal pressurized runs in all other locations of the

building shall be isolated by Type E hangers. Floor supported piping shall rest on Type B isolators. Heat exchangers and expansion tanks are considered part of the piping run. The first 3 isolators from the isolated equipment will have the same static deflection as specified for the mountings under the connected equipment. If piping is connected to equipment located in basements and hangs from ceilings under occupied spaces, the first 3 hangers shall have 0.75" deflection for pipe sizes up to and including 3", 1 3/8" deflection for pipe sizes thereafter. Where column spacing exceeds 35', isolation hanger deflection shall be 2-1/2" for pipes exceeding 3" diameter. Type L hangers may be substituted for the above where isolation hangers are required.

Steam and Condensate Piping: All ceiling suspended piping in the mechanical equipment room shall be isolated with Type D hangers. All floor supported piping shall be supported with Type F isolators.

Plumbing Water Lines. Plumbing water lines in the machine room shall only be isolated if connected to isolated equipment. (See Table B). Isolator type shall be as listed in Paragraph 1, above.

Riser Location: All risers shall be supported on Type J or K anchors or guide restraints positively attached to both the riser and structure. Spiders welded to the pipe can substitute for Type K guides using J Type anchors.

Control Air Piping: Where control air piping is connected to mechanical piping equipment shall be flexibly connected in horizontal and vertical plane with Type FC-2 flexible connectors.

Gas lines shall not be isolated.

Fire protection lines shall not be isolated.

B. Seismic Restraint of Piping, Conduit, Bus Duct and Cable Tray

1. All high hazard and life safety pipe regardless of size such as fuel oil piping, fire protection mains, gas piping, medical gas piping and compressed air piping shall be seismically restrained or braced. Type V seismic cables restraints or resilient single arm braces shall be used if piping is isolated. Type V seismic cable restraints or Type VI single arm braces may be used on unisolated piping. There are <u>no exclusions</u> for size or distance in this category.

2. Seismically restrain all other piping throughout the building as required by IBE/ASCE Type V seismic cables restraints or resilient single arm braces shall be used if piping is isolated. Type V seismic cable restraints or Type VI single arm braces may be used on unisolated piping.

3. See Table D for maximum seismic bracing distances.

4. Multiple runs of pipe on the same support shall have distance determined by calculation.

5. Rod braces shall be used for all rod lengths as listed in table “E”.

6. Clevis hangers shall have spacers placed inside of hanger at seismic brace locations.

7. Where thermal expansion is a consideration, guides and anchors may be used as transverse and longitudinal restraints provided they have a capacity equal to or greater than the restraint loads in addition to the loads induced by expansion or contraction.

8. For fuel oil and all gas piping, transverse restraints must be at 20' maximum and longitudinal restraints at 40' maximum spacing.

9. Transverse restraint for one pipe section may also act as a longitudinal restraint for a pipe section of the same size connected perpendicular to it if the restraint is installed within 24" of the elbow or TEE or combined stresses are within allowable limits at longer distances.

10. Hold down clamps must be used to attach pipe to all trapeze members before applying restraints. Use Type V or VI restraint, if trapeze is smaller than 48” long.

11. Branch lines may not be used to restrain main lines.

12. All PVC and glass pipe less than 6” are braced only if the pipe use involves hazardous or toxic materials. All other

PVC and glass pipe greater than 6" shall be braced at 20' transversely and 40' longitudinally with bottom shields.

13. All fire protection branch lines shall be end tied, as required by NFPA.

14. Where pipe passes through a two sided sheet rock wall, the wall if tight to the pipe shall act as a lateral / transverse brace for pipe sizes up to and including 4”.

15. Where horizontal pipe crosses a building’s drift expansion joint, allowance shall be part of the design to accommodate differential motion.

16. Vertical pipe rises between floors shall have their differential of movement part of the seismic design for building drift.

17. For horizontal passage of all underground utilities through building’s foundation wall, all pipes shall pass freely through an oversized opening and waterproofed accordingly to accommodate maximum allowable building drift. (Seismic Restraint Type VIII).

C. Vibration Isolation of Ductwork

1. All discharge runs for a distance of 50' from the connected equipment shall be isolated from the building structure by means of Type E combination spring elastomer hanger or Type A floor spring isolators. Spring deflection shall be a minimum of 0.75".

2. All duct runs having air velocity of 1500 feet per minute (fpm) or more shall be isolated from the building structure by Type E combination spring elastomer hangers or Type A floor spring supports. Spring deflection shall be a minimum of 0.75".

Seismic Restraint of Ductwork

1. Restrain rectangular ductwork with cross sectional area of 6 square feet or larger. Type V seismic cable restraints or Type VI single arm braces shall be used on this

   duct. Duct which serves a life safety function or carries toxic materials in an “Essential or High Hazard Facility” must be braced with no exceptions regardless of size or distance requirements..

2. Restrain round ducts with diameters of 28" or larger. Type V seismic cable restraints or Type VI single arm braces.

3. Restrain flat oval ducts the same as rectangular ducts of the same nominal size.

4. See Table D for maximum seismic bracing distances.

5. Duct must be reinforced at the restraint locations. Reinforcement shall consist of an additional angle on top of the ductwork that is attached to the support hanger rods. Ductwork is to be attached to both upper angle and lower trapeze. Additional reinforcing is not required if duct sections are mechanically fastened together with frame bolts and positively fastened to the duct support suspension system.

A group of ducts may be combined in a larger frame so that the combined weights and dimensions of the ducts are less than or equal to the maximum weight and dimensions of the duct for which bracing details are selected.

Walls, including gypsum board non-bearing partitions, which have ducts running through them, may replace a typical transverse brace. Provide channel framing around ducts and solid blocking between the duct and frame.

If ducts are supported by angles, channels or strut, duct shall be fastened to same at seismic brace locations in lieu of duct reinforcement.

3.4 EXCLUSIONS

A. EQUIPMENT

Curb mounted mushroom, exhaust and vent fans with curb area less than nine square feet are excluded unless specifically detailed in the schedules or drawings.

Floor mounted equipment weighing less than 400#s and not resiliently mounted.

B. DUCT
Rectangular, square, and oval air handling ducts less then six square feet in cross sectional area. Round air-handling duct less than28 inches in diameter. Duct supported at locations by two rods less than 12 inches in length from the structural support to the structural connection to the ductwork.

C. PIPE, CONDUIT, CABLE TRAYS & BUS DUCTS (Components)
All pipe or conduit less than 2 ½" diameter suspended by individual hanger rods. All clevis supported pipe or conduit less than 12" from the top of the pipe to the underside of the support point. Trapeze supported pipe, cable trays and bus ducts suspended by hanger rods having a distance less than 12" in length from the underside of the pipe support to the support point of the structure.

C. EXCLUSIONS DO NOT APPLY FOR:

LIFE SAFETY or HIGH HAZARD COMPONENTS needed for the continued operation of the facility, or whose failure could impair the facility's continued operation, Category IV as listed in Article 1.02, Paragraph C regardless of governing code for HVAC, Plumbing, Electrical or Fire Protection. *(A partial list is illustrated)* High Hazard is additionally classified as any system handling flammable, combustible or toxic material. Typical systems not excluded are additionally listed below. The above includes equipment and piping components.

1. ELECTRICAL
Includes critical, standby or emergency power components including conduit (1" nominal diameter and larger), cable tray or bus duct, lighting, panels, communication lines involving 911, etc.

2. PIPING
Fuel oil, gasoline, natural gas, medical gas, steam, compressed air or any piping containing hazardous, flammable, combustible, toxic or corrosive materials. Fire protection standpipe, risers and mains. Branches must be end tied.

3. DUCT
Smoke evacuation duct or fresh air make up connected to emergency system, emergency generator exhaust, boiler breeching or as used by the fire department on manual override!

4. EQUIPMENT
Previously excluded non-life safety duct mounted systems such as fans, variable air volume boxes, heat exchangers and humidifiers having a weight greater than 75 lbs require independent seismic bracing.

3.5 FIELD QUALITY CONTROL, INSPECTION

A. All Independent Special and Periodic Inspections must be performed and submitted on components as outlined in Article 1.05, Paragraph B3. (See also Contractor Responsibility, Article 1.05, Paragraph B4). Note: Special Inspection services are to be supplied by the owner.

B. Upon completion of installation of all vibration isolation devices, the local representative shall inspect the completed project and certify in writing to the Contractor that all systems are installed properly, or require correction. The contractor shall submit a report to the Architect, including the representative's report, certifying correctness of the installation or detailing corrective work to be done.

HVAC EQUIPMENT TABLE - ON GRADE, BASEMENT OR SLAB ON GRADE, ABOVE GRADE										
EQUIPMENT (See Note!)		MTNG	ISOL	DEFL (in.)	BASE	RESTR	ISOL	DEFL (in.)	BASE	RESTR
Air Handling Units Indoor		Flr	B	0.75	---	IV	B	1.5	---	IV
		Clg	E	0.75	---	V	E	0.75	---	V
Condensing Outdoor Units		Roof	---	---	---	IV	B	2.50	B-5	IV
Cabinet Fans		Flr	G	0.10	---	IV	B	0.75	---	IV
Centrif. Chillers		Flr	B	0.75	---	IV	B	1.50	---	IV
Centrif. Fans Arr. 1 & 3	Class 1	Flr	B	0.75	B-1	IV	B	See Guide	B-1	IV
	Class 2 & 3	Flr	B	0.75	B-2	IV	B	See Guide	B-2	IV
Computer Room Units		Flr	F	0.20	B-7	IV	B	1.5	B-7	IV
Condensate Pumps		Flr	F	0.20	If req.	IV	F	0.20	If req.	IV
Cooling Towers		Flr	B	0.75	---	IV	B	2.50	B-5 opt.	IV
Curb Mtd. Equip. (Non-Isol.)		Roof	---	---	---	IV	---	---	B-6	IV
Fan Coil Units		Flr	F	0.20	---	IV	B	0.75	---	IV
		Clg	D	0.35	---	V	E	0.75	---	V
Outdoor Reciprocating, Rotary or Screw Chillers		Flr	F	0.20	---	IV	B	1.50	---	IV
		Roof	---	---	---	IV	B	2.50	B-5	IV
Rooftop AHU/AC	< 10 Ton	Roof	---	---	---	IV	B	1.50	B-3 *(3,4)	IV
	> 10 Ton	Roof	---	---	---	IV	B	2.50	B-3 *(3,4)	IV
Unit/Cab Heaters		Clg	D	0.30	---	V	D	0.30	---	V

GENERAL:

ISOL= ISOLATOR
DEFL= DEFLECTION
RESTR = SEISMIC RESTRAINT
MTNG= MOUNTING.
ALL DEFLECTIONS INDICATED ARE IN INCHES.

Note 1: For equipment with variable speed driven components having driven operating speed below 600 rpm, select isolation deflection from minimum deflection guide

Note 2: For roof applications, use base Type B-5.

Note 3: Specification Option #1 called out on equipment schedule in curb Type B-3 shall use sound barrier RPFMA when there is no concrete under roof top units and this option is selected. Curbs can be used for return plenums. (See Option #1 under curb type B-3)

Note 4: Specification Option #2, called out on equipment schedule in curb Type B-3 shall be used where require supply and return sound attenuation package type SPFMA shall be used. (See Option #2 under curb type B-3)

Note 5: Units may not be capable of point support. Refer to separate air handling unit specification section. If base is not provided by that section and external isolation is required, provide Type B-1 base by this section for entire unit.

Note 6: Static deflection shall be determined based on the deflection guide for Table “A”.

Note 7: Deflections indicated are minimums at actual load and shall be selected for manufacturer’s nominal 5”, 4”, 3” 2” and 1” deflection spring series, RPM is defined as the lowest operating speed of the equipment.

Note 8: Single stroke compressors may require inertia bases with thickness greater than 14” maximum as described for base B-2. Inertia base mass shall be sufficient to maintain double amplitude for 1/8”.

Note 9: Floor mounted fans, substitute base Type B-2 for class 2 or 3 or any fan having static pressure over 5”.

Note 10: Indoor utility sets with wheel diameters less than 24” need not have deflections greater than .75”.

Note 11: Curb mounted fans with curb area less then 9 square feet are excluded.

Note 12: For equipment with multiple motors, Horse Power classification applies to largest single motor.

SEISMIC BRACING TABLE
(Maximum Spacing Shown- Actual Spacing to Be Determined by Calculation)

EQUIPMENT	ON CENTER TRANSVERSE	ON CENTER LONGITUDINAL	CHANGE OF DIRECTION
DUCT	30 FEET	60 FEET	4 FEET
PIPE THREADED, WELDED, SOLDERED OR GROOVED			
TO 16”	40 FEET	80 FEET	4 FEET
18” – 28”	30 FEET	60 FEET	4 FEET
30” – 40”	20 FEET	60 FEET	4 FEET
42” & LARGER	10 FEET	30 FEET	4 FEET
PIPE - NO HUB OR BELL AND SPIGOT			
2.5” & LARGER	10 FEET	20 FEET	4 FEET
BOILER BREECHING	30 FEET	60 FEET	4 FEET
CHIMNEYS & STACKS	30 FEET	60 FEET	4 FEET
CONDUIT	40 FEET	80 FEET	4 FEET
BUS DUCT	20 FEET	40 FEET	4 FEET
CABLE TRAY	40 FEET	80 FEET	4 FEET

SEISMIC ROD BRACING SCHEDULE OF VERTICAL HANGER ROD

V-A Rod Bracing Clamp No.	Rod Dia (Inches)	Rod Lengths Over “X” Inches	Steel Angle Size Inches	Clamp Spacing	Min # of Clamps per Stiffener
VAC – 1	3/8"	19"	1 x 1 x ¼"	16"	2
VAC – 1	½"	25"	1 x 1 x ¼"	20"	2
VAC – 1	5/8"	31"	1 x 1 x ¼"	12"	3
VAC	¾"	37"	1 ½ x 1 ½ x ¼"	16"	3
VAC	7/8"	43"	1 ½ x 1 ½ x ¼"	12"	4
VAC	1"	50"	1 ½ x 1 ½ x ¼"	16"	4

FORM CQAP: OCCUPANCY CATEGORY IV PROJECTS

Section 15005
Vibration Isolation and Seismic Restraints

Contractor Name: _____

Date: _____

Project: _____

Specification Section: _____

Contractor IBC Quality Assurance Seismic Program.

This form is to be filled out as the identifying document for the Contractors Quality Assurance program, (see Contractor Responsibility Section 1.05, Paragraph B4) before the first submission in any vendor group by the installing contractor. All items listed herein shall be part of that program.

1. Acknowledge special requirements contained in the quality assurance plan
2. Acknowledge that control will be exercised to obtain conformance with the construction documents
3. Procedures for exercising control within the contractors organization including frequency and distributions of inspections and testing reports
4. Identification and qualification of the persons exercising control of this program within their organization

Contractor to submit this program acknowledging receipt and program implementation. Each of the 4 listed programs are to be submitted including all applicable details as listed above.

_____
Signature

_____
Print Name

FORM CVC-1 OCCUPANCY GROUP IV PROJECTS

Section 15005
Vibration Isolation and Seismic Restraints

Contractor Name: _____

Date: _____

Project: _____

Specification Section: _____

Notes to the installing contractor

The purpose of this form is for you the contractor to fill in all vendors that are IBC compliant as part of your initial submission for any group of equipment, ie., fans, ac units, pumps, etc. It is acceptable to submit vendors that will be compliant as long as a factory letter is issued stating full compliance will occur at time of shipment. Only IBC compliant vendors can participate on this project. In the event that no vendor in any group is IBC compliant, this information must be submitted to the project's MEP for approval.

Manufacturer	Yes	No

_____ Signature

_____ Print Name

FORM SQA-1 FOR OCCUPANCY CATEGORY IV PROJECTS

Section 15005
Vibration Isolation and Seismic Restraints
Seismic Quality Assurance Plan for The Installation of Life Safety
And High Hazard Systems, (Inspections)

Contractor Name: _____

Date: _____

Project: _____

Specification Section: _____

The following are required for the Seismic Quality Assurance Installation Plan for Life Safety and High Hazard systems to be prepared and submitted by each installing contractor, (see Contractor's Responsibilities Article 1.05, Paragraph B4). This plan must reflect all of the provisions and reports outlined in the paragraphs below. As part of this contractor's final requisition, this form must accompany, along with all satisfactorily completed tests and reports, the final payments request including all applicable certification reports.

Special field inspection and testing is required by IBC Sections 1704, 1707 & 1708 during the installation of Life Safety and High Hazard System components including equipment, piping and all electrical connections. Components must be inspected by a Building Official or approved independent special inspector periodically during the course of installation. Contractor shall submit such inspection reports as part of his project wrap up for each group of equipment, components so requiring this program. All components, which are Life Safety designate or Handle Hazardous substances fall into this category. Typical Life Safety and High Hazard components well are outlined in Article 1.05, Paragraph B and Article 3.04 Paragraph D.1 thru D.4.

_____
Signature

_____
Print Name

SECTION 23 60 00

GENERAL PROVISIONS FOR HVAC WORK

PART 1 - GENERAL

1.1 RELATED DOCUMENTS

A. All of the Project "General Documents" apply to work specified in this Section; consult them in detail for applicable instructions.

B. Manufacturers referenced in the technical specifications are for the purpose of establishing a standard of quality. Alternate manufacturers providing the same quality materials or equipment will be given consideration by the Architect and/or Engineer if they are notified in writing.

C. Section 23 00 00 - Special Requirements for Mechanical and Electrical Work shall apply.

D. Section 23 00 50 - Vibration Isolation and Seismic Restraints for HVAC, Fire Protection, Electrical and Plumbing shall apply.

1.2 GENERAL

A. In addition to the work covered under this Section, comply with description of individual systems under other Sections of the Specifications.

1.3 DESCRIPTION OF WORK

A. Review all plans and specifications relative to this work, particularly those sections describing heating, ventilating, and air conditioning equipment and become familiar with work called upon therein to do. At the conclusion of the work, be responsible for the proper piping, wiring and functioning of all operating equipment furnished and/or installed under this contract.

B. Work Included: Provide all labor, materials, equipment, tools, and management services for proper and complete execution of all HVAC work. Without restricting the generalization of the foregoing, the following items of work are included:

1. Provide complete HVAC systems for the first, second and third floors, including variable refrigerant heat recovery split systems with indoor fan coil units and outdoor condensing units, piping, fi8lters, controls, transformers, wiring, volume dampers, and all necessary accessories to complete the system.

2. Provide energy recovery supply and exhaust outdoor air handling units for code required outside air supply.

3. Provide split heat pump system for the UPS, IT, and EMRS as shown.

4. Refrigerant and condensate piping.

5. Provide air distribution systems, including diffusers, ductwork, dampers, turning vanes, collars, registers and grilles, filters, sound traps and acoustical lining.

6. Provide insulation of all refrigerant condensate piping, concealed interior supply ductwork, and all outdoor ductwork.

7. Electrical heating units.

8. All individual motor starters, variable speed drives and controllers (not incorporated into packaged type units) for equipment furnished by this section. Packaged type units shall be furnished completely pre-wired with electric control panels mounted on the units as specified. Turn over all individual motor starters and controllers to “Electrical” for installation and wiring.

9. Exhaust fans.

10. Electrical heat pumps, electrical wall heaters, unit heaters and dehumidifiers.

11. Seismic wind rated curbs, vibration isolation equipment, and seismic restraints, including calculations, certification, inspection and sign off by New Jersey Professional Engineer.

12. Supports, hangers, pass-throughs and watertight sleeves, caulking and fire proofing associated with HVAC work, seismic type where required.

13. Fire dampers and access doors in ductwork.

14. Installation of smoke detectors in ductwork.

15. Temperature Control and Building Automation: A complete direct digital electronic system of temperature control shall be installed in connection with the HVAC systems, including all microprocessors, CRT's, sensors, thermostats, control valves, damper motors and dampers for the outdoor air intakes and fan discharges. All control wiring for automatic temperature control and building automation, including interlocking wiring for fans, pumps, etc., by the Contractor.

16. Pipe and duct identification, nameplates, tags and charts for all work by this Contractor as specified under General Conditions and in Section 15000.

17. Testing and balancing of all HVAC equipment and systems.

18. Sleeves, pipe inserts and anchor bolts, escutcheons etc., as hereinafter specified.

19. Cutting and patching.

20. Furnishing and setting of electric motors associated with mechanical equipment.

21. Templates and anchor bolts for equipment bases.

22. Roof curbs and cap flashing for pipes and ducts passing through roofing and/or roof curbs.

23. Prime and finish painting for all HVAC work, to standards of “Painting and Finishing”.

24. Furnishing and installing access doors and frames in ceiling and wall construction.

25. All low voltage wiring for miscellaneous switches, alarms, etc., which are part of this Section.

26. Concrete pads (including housekeeping pads) for all HVAC equipment, to standards of “Cast-in-Place Concrete”.

27. Auxiliary steel required for supporting HVAC equipment, ductwork, and piping, other than that specified under “Structural Streel” available in the building structure or shown on the structural drawings.

28. Prime and finish painting of any exposed steel provided under this contract, to standards of “Painting and Finishing”.

29. Ductless split type supplementary air conditioning systems for Server Rooms and Machine Rooms, comprised of indoor fan coil unit with integral DX-coil and remote condensing unit, complete with all interlock power and control wiring between outdoor and indoor unit controls, piping, condensate pump, etc.

30. Warranties, Guarantees, and Service.

31. Instruction, operating, and maintenance manuals, and instruction period with Owner’s operating personnel.

32. Record drawings and as built documents.

33. Apply for, obtain and pay for all permits, certificates, inspections and approvals required in connection with all HVAC work provided under this division.

34. Where due to union regulations or trade agreements, any of the work shown on the drawings or specified herein is not considered HVAC Work, the Contractor shall provide the work in question, and the Contractor shall be held responsible for the complete installation.

35. Special and periodic inspections.

1.4 CODES AND QUALITY ASSURANCE

A. The Contractor is responsible for performing all work in a neat, workmanlike manner. All operating procedures shall be strictly adhered to. Each Bidder shall visit the site and become informed as to the conditions of the premises and the extent and character of the work required. No consideration will be granted for any alleged misunderstanding of the Work to be done.

B. Use adequate numbers of skilled workmen who are thoroughly trained and experienced in the necessary crafts and who are completely familiar with the specified requirements and the methods needed for proper performance of the work of this Section.

C. All HVAC work, equipment and apparatus shall conform to the most recent requirements of the following:

2021 International Building Code of New York State
2018 International Mechanical Code
2019 ASHRAE Standard 90.1 Energy Code

ADA - Americans with Disabilities Act
Local Codes and Utility Requirements
NFPA - National Fire Protection Association
2018 International Plumbing Code
AMCA Air Movement and Control Association, Inc.
SMACNA Sheet Metal and Air Conditioning Contractors National Association, Inc.
ASHRAE American Society of Heating, Refrigerating, and Air Conditioning Engineers
ASTM American Society for Testing and Materials
NEC - National Electrical Code of the NFPA 2014
ASME - American Society of Mechanical Engineers
2018 International Fuel Gas Code
ADC - Air Diffusion Council
AABC - Associated Air Balance Council
ARI - Air Conditioning and Refrigeration Institute
National Board of Fire Underwriters
UL - Underwriters' Labs
Requirements of the Owner's Insurance Underwriter

1.5 SUBMITTALS

A. Submit shop drawings covering the following items:

1. Coordination drawings.
2. VRV Heat Recovery and Split System Heat Pup Condensing Units
3. VRV and Split System Heat Pump Fan Coil Units
4. Sleeve and ductwork penetration drawings.
5. Identification schedule and samples.
6. Rooftop ERV units.
7. Air filters.
8. Air diffusers, registers and grilles.
9. Schedule of ductwork, joints, gauges, supports, flexible connections, fire dampers, access doors, etc.
10. Sheet metal fabrication drawings.
11. Schedule of valves, strainers, vacuum breakers.
12. Piping shop drawings.
13. Vibration isolation and seismic restraints, including analysis, engineering calculations, inspection, signed and sealed by New York State Professional Engineer.
14. Acoustical material.

15. Building automation system and automatic temperature controls.

16. Operating and maintenance manuals.

17. Testing and balancing reports.

18. Record drawings.

B. All shop drawings being submitted that include electrical work shall be submitted with all internal and external wiring diagrams.

C. The previously listed items are major equipment and do not limit this Division's responsibility to submit shop drawings for all equipment and accessories which are to be provided under this Division of the Specifications.

D. Electrical Work - Where the Contractor, or packaged unit manufacturer, performs Electrical Work (line voltage or low voltage), he shall do so in accordance with the criteria of Division 16 of the Specifications. Refer to Division 16 of the Specifications where applicable.

E. Equipment Installation - The Contractor shall obtain start-up and checkout services of the manufacturer’s representatives of all major heating, ventilating and air conditioning equipment and fixtures at the site during the erection or construction of same. Failure to have such checks made by the manufacturer shall place full responsibility for proper installation on the Contractor who shall make any corrections or remedy all defects at no additional cost. Furnish a letter from each manufacturer certifying to the Owner via the Architect that the respective equipment has been checked by the manufacturer’s Rep and is properly installed and operating.

PART 2 - PRODUCTS

2.1 SPARE PARTS

A. Filters:

In addition to the filter requirements for initial installation, start up, balancing etc. the Contractor shall furnish 2 complete spare filter sets for each air handling unit and one spare filter for each filter grille (FG).

2.2 LIST OF AUTHORIZED HVAC MANUFACTURERS

A. The manufacturer's name appearing first on this list is the manufacturer the project design is based upon. However, the additional manufacturers listed herein are also acceptable with the provision that they meet the requirements of the specifications, ratings, and/or space allocations listed in the Specifications are shown on the Drawings.

1. Rooftop ERV Units
   a. OXYGEN 8
   b. Valent
   c. Or Authorized Equal, subject to these specifications (with no greater dimensions or required clearances)

2 VRV Heat Recovery and Split System Heat Pup Systems
   a. Daiken
   b. Trane
   c. Carrier

3. Air Filters
    a. American Air Filter
    b. Farr
    c. Cambridge

4. Motors
    a. General Electric
    b. Westinghouse
    c. Allis Chalmers
    d. Lincoln

5. Individual Starters
    a. Square D
    b. General Electric
    c. Westinghouse
    d. Cutler-Hammer
    e. Siemens

6. Diffusers, Registers & Grilles
    a. Titus
    b. Tuttle & Bailey
    c. Price

7. Insulation
    a. Owens-Corning Fiberglass Co.
    b. Armacell
    c. Manville
    d. KNAUF

8. Vibration Isolation
    a. Vibration Mountings and Controls
    b. Vibration Eliminator Co.
    c. Vibro Acoustics

9. Automatic Temperature Controls & BMS Sub Contractors
    a. AME-Inc (Daikin)
    b. Trane (Trane)
    c. Automated Building Controls Inc. (Carrier)

PART 3 - DEBRIS REMOVAL

A. Routinely remove, in an orderly and efficient manner (and cart away and dispose of, by legal means, off the site and premises), all debris related to work of this Section; worksite and staging areas shall be kept clear of all debris on a daily basis; permit no debris accumulation which poses any threat to life safety or property. Non-conformance with the foregoing Contract requirements will be subject to all remedies established by the Project "General Documents".

PART 4 – GUARANTEE

A. The Contractor shall submit in writing (triplicate) a guarantee of all Mechanical work.

B. Such guarantee shall be for a period of one (12) years after the date of substantial completion, and shall include the making at contractor's expense, of any repairs which may be required owing to defective workmanship and/or materials.

END OF SECTION 23 60 00

SECTION 23 75 00 – ROOFTOP ENERGY RECOVERY UNITS

PART 1 - GENERAL

1.1 RELATED DOCUMENTS

A. All of the Project "General Documents" apply to work specified in this Section; consult them in detail for applicable instructions.

B. Manufacturers referenced in the technical specifications are for the purpose of establishing a standard of quality. Alternate manufacturers providing the same quality materials or equipment will be given consideration by the Architect and/or Engineer if they are notified in writing and approved by the Owner.

C. Section 23 00 00 - Special Requirements for Mechanical and Electrical Work shall apply.

D. Section 23 00 50 - Vibration Isolation and Seismic Restraints for HVAC, Fire Protection, Electrical and Plumbing shall apply.

1.2 DESCRIPTION OF WORK

A. The work includes the providing of all labor, materials, equipment, accessories, services and tests necessary to complete and made ready for operation by the Owner, rooftop air conditioning units as shown on the drawings and hereinafter specified.

1.3 QUALITY ASSURANCE

A. Manufacturing firms regularly engaged in manufacture of this material with characteristics and capacities required, whose products have been in satisfactory use in similar service for not less than ten (10) years.

B. Provide product produced by the manufacturers which are listed in Section 15600 under “List of Approved HVAC Manufacturers.”

C. Provide equipment whose performance, under specified conditions, is certified by the manufacturer.

1.4 SUBMITTALS

A. Refer to Section, "Special Requirements for Mechanical and Electrical Work," and submit shop drawings.

PART 2 - PRODUCTS

2.1 MANUFACTURERS

A. Subject to compliance with project plans and specifications the following manufacturers are approved to supply products: Oxygen8

2.2 CABINET

A. Cabinet shall be nominal 2-inch double wall panel with R13 2.5lb/ft^3 polyurethane foam thermal insulation. Cabinet exterior shall be 20-gauge pre-painted steel that meets or exceeds 650 hour salt spray test based on ASTM B117. 22 Gauge Liners and other steel components shall be galvanized steel. All seams shall be sealed to provide air tight casing.

B. Doors shall be nominal 2-inch double wall panel with the same construction as cabinet. Doors shall be fitted with hinges and door handles. The doors shall have one lockable handle as standard.

C. The unit will be designed for service and maintenance on one side only to allow for a compact installation.

D. All dampers shall have extruded heavy gauge 6063 aluminum frame that includes jamb seals. Blades shall be airfoil shaped extruded aluminum and include rubber blade seals. Linkage shall be installed in the frame outside of the airstream.

E. All dampers shall include factory mounted, wired and tested actuators. Dampers shall be modulating or two position as required. Provide spring return dampers for outdoor air connections.

F. Standing seam roof to provide weather protection for outdoor installation with exhaust air and outdoor air weather hoods

2.3 FILTERS

A. Unit shall include 2" filter rack for the supply air and return air paths upstream of energy recovery exchanger. Filters shall be accessed through hinged filter access door. Supply one set of MERV 13 pleated filters for the Outdoor air stream and one set of MERV 8 for the Return air stream. All filters must be UL approved.

B. Provide factory mounted pressure sensors to measure filter pressure drop across pre-filter and main filter. Pressure drop shall be digitally feedback to controller for utilization in control and alarm sequencing. Unit controller shall monitor filter pressure level and report when filter changes are required.

2.4 FANS

A. Fans shall be mixed flow plenum type with direct drive motor. Fan and motor assembly shall be factory mounted and balanced. The fans will be capable of operating in ambient temperatures of up to 40°C.

B. The fans must be sized to have a specific fan power of <1 Watt/CFM.

C, Fan motors shall be permanent magnet, synchronous motor type with integral digital motor controller. Fan bearings shall be serviceable type with an L-10 life of 40,000 hours. Fan motors will be UL approved.

D. All fans shall be equipped with integral airflow monitoring system connected to the unit controller.

E. Provide means to easily remove fan-motor assembly for service through standard doors.

F. Fans should be designed such that all service can be performed in the field, including replacement of bearings.

G. Fan motor drives shall be 208/60/3 and be UL approved. Fans will be protected by UL approved motor protection circuit breaker.

2.5 ENERGY RECOVERY DEVICE

A. Where indicated, units shall include plate type cross flow heat exchanger fabricated from polymer membrane. Unit shall be capable of withstanding a maximum of 7.2” w.c. Maximum leakage between airstreams shall be 0.5% of nominal airflow.

B. The energy recover efficiency must be a minimum of 50% Total to meet ASHRAE 90.1.
C. The energy recovery device must have an ISO Hygiene rating of 0.
D. Energy recovery device shall be AHRI 1060 certified

2.6 ELECTRIC HEATING COIL

A. Provide open coil electric heaters of the size, capacity and performance shown in the equipment schedules.
B. All duct heaters shall be tested and certified to UL and CSA.
C. Frame to be corrosion-resistant and made of galvanized steel.
D. Coils shall be made of high-grade Nickel-Chrome alloy and shall be insulated from the frame by means of non-rotating ceramic bushings.
E. Heater to come with door mounted disconnect switch and air proving switch
F. SCR control is time proportioning type that modulates the heater and supplies the exact amount of power to match the demand. Input signal will be 0-10V.
G. Heaters shall be equipped with a fail-safe automatic reset disc-type thermal cut-out located in the top frame component above the heating element.
H. Duct heaters shall be non-sensitive to air flow direction and interchangeable for horizontal or vertical ducts without impairing safety.

2.7 CONTROLS

A. Unit shall include an integrated microprocessor-based unit controller. The controls shall be located in the integral control's cabinet. All unit controls shall operate off a transformer from the main power supply for single point power connection. All internal controls and sensors shall be factory prewired and tested. The microprocessor shall have dual Ethernet ports with an internal firewall to allow remote access via third party without compromising the clients internal Network.
B. Include with each unit touch pad type human interface that allows monitoring and control of all unit functions. Human interface shall communicate with unit controller by hardwire connection. Human interface shall be unit mounted. The control system will regulate temperatures, airflows and other functions as required. Unit controller shall be pre-programmed with factory tested software for all possible functions.
C. The controller shall provide the following, refer to sequence of operation for specific unit control sequences;
- Control of fans correcting for both changes in total static pressure and air density in both VAV and constant airflow applications.
- Fan performance monitoring.
- Ventilation airflow monitoring and control.
- Airflow density correction for winter and summer conditions.
- Energy recovery optimization including operation of rotary energy recovery device.
- Supplemental heating and cooling when included.
- Frost protection.
- Monitoring alarms, faults and maintenance points including filter changeout.
- Time and date schedules.
- Humidity control.
- Data logging and trending.

D. Include wireless capability that will allow the client to access remotely via ethernet connection. If non factory controls are proposed as an option, a factory witness test is required to show integration and functionality.
E. Controller shall be BACnet IP, BTL certified and include Modbus communication. Communication shall include monitoring, control, alarms, faults and maintenance information.
F. Provide factory installed and tested contactors, overloads, fusing, starters motor speed controllers for supply and exhaust. Include all necessary control transformers.

G. Provide unit mounted non-fused disconnect switch with single point power connection.

H. Supply all necessary temperature and pressure sensors complete with plug in wiring harnesses for proper option of unit.

2.8 PLASTIC COMPONENTS

A. All plastic components that are in the airstream, must be of a UL94 rated material.
B. If gasketing is used to join unit sections together, gasketing much be a UL94 approved compound.

PART 3 - EXECUTION

3.1. EXAMINATION

A. Prior to start of installation, examine area and conditions to verify correct location for compliance with installation tolerances and other conditions affecting unit performance. See unit IOM.

B. Examine roughing-in of plumbing, electrical and HVAC services to verify actual location and compliance with unit requirements. See unit IOM.

C. Proceed with installation only after all unsatisfactory conditions have been corrected.

3.2. INSTALLATION

A. Installation shall be accomplished in accordance with these written specifications, project drawings, manufacturer's installation instructions as documented in manufacturer's IOM, Best Practices and all applicable building codes.

3.3. CONNECTIONS

A. In all cases, industry Best Practices shall be incorporated. Connections are to be made subject to the installation requirements shown above.

B. Piping installation requirements are specified in Division 22 (Plumbing). Drawings indicate general arrangement of piping, fittings and specialties.

C. Duct installation and connection requirements are specified in Division 23 of this document.

D. Electrical installation requirements are specified in Division 26 of this document.

3.4. FIELD QUALITY CONTROL

A. Manufacturer's Field Service: Engage a factory authorized service representative to inspect field assembled components and equipment installation, to include electrical and piping connections. Report results to A / E in writing. Inspection must include a complete startup checklist to include (as a minimum) the following: Completed Start-Up Checklists as found in manufacturer's IOM.

3.5. START-UP SERVICE

A. Engage a factory authorized service representative to perform startup service. Clean entire unit, comb coil fins as necessary, install clean filters. Measure and record electrical values for voltage and amperage. Refer to Division 23 "Testing, Adjusting and Balancing" and comply with provisions therein.

3.6. DEMONSTRATION AND TRAINING

A. Engage a factory authorized service representative to train owner's maintenance personnel to adjust, operate and maintain the entire unit. Refer to Division 01 Section Closeout Procedures and Demonstration and Training.

3.7 EXTRA MATERIALS

A. Furnish extra materials that match products installed and that are packaged with protective covering for storage and identified with labels describing contents.

1. Filters: 1 set(s) of MERV 8 disposable Supply Air and Exhaust Air filters.

END OF SECTION 23 75 00

SECTION 23 80 10

HVAC SPECIALTIES

PART 1 - GENERAL

1.1 RELATED DOCUMENTS

A. All of the Project "General Documents" apply to work specified in this Section; consult them in detail for applicable instructions.

B. Manufacturers referenced in the technical specifications are for the purpose of establishing a standard of quality. Alternate manufacturers providing the same quality materials or equipment will be given consideration by the Architect and/or Engineer if they are notified in writing per General Conditions.

C. Section 23 00 00 - Special Requirements for Mechanical and Electrical Work shall apply.

D. Section 23 00 50 - Vibration Isolation and Seismic Restraints for HVAC, Fire Protection, Electrical and Plumbing.

1.2 DESCRIPTION OF WORK

A. The work includes the providing of labor, materials, equipment, accessories, services and tests necessary to complete and make ready for operation by the Owner, all HVAC Specialties as shown on the Drawings and hereinafter specified.

1.3 QUALITY ASSURANCE

A. Firms regularly engaged in manufacturer of this equipment with characteristics and capacities required, whose products have been in satisfactory use in similar service for not less than ten (10) years.

B. Provide product produced by the manufacturers, which are listed in Section 15600 under "List of Approved HVAC Manufacturers."

C. Provide equipment whose performance under specified conditions is certified by the manufacturer.

1.4 SUBMITTALS

A. Refer to Section, "Special Requirements for Mechanical and Electrical Work," and submit shop drawings.

PART 2 - PRODUCTS

2.1 THERMOMETERS

A. Furnish and install, where indicated on the Drawings and where specified herein, separable well-type dial or 9" mercury adjustable angle type in glass stem, thermometers as manufactured by American, Weksler, Weiss or approved equal.

B. All thermometers shall be installed in such a manner as to cause a minimum of restriction to flow in the pipes and so that they can easily be read from the floor.

C. Dial thermometers shall be 5 inch hermetically sealed, bimetal with stainless steel case, antiparallax dials with raised jet black figures, stainless steel stems, and brass separable sockets unless otherwise specified. Thermometers for duct mounting shall have union connections in lieu of separable sockets. Separable wells shall be stainless steel for steel pipe and brass for copper pipe. Separable wells shall be standard type for uninsulated pipe and lagging extension type of proper length for insulated pipe. Stem shall extend a minimum of 2_1/2" into the fluid.

D. The accuracy of all thermometers shall be within 1% of the scale range.

E. All instrument wells for controls and indicators furnished by the temperature control manufacturer shall be installed under this Section.

F. Where conditions are such that thermometers would not be readable from the floor, remote bulb dial thermometers shall be mounted on panelboards. The thermometers shall be 5 inch dials and shall be vapor actuated. The thermometers shall have separable wells. Panel mounted thermometers shall be provided with an engraved nameplate mounted below each thermometer to identify its service.

G. A thermometer shall be installed in the inlet and outlet of each heat exchanger. A thermometer shall be installed in the condenser water inlet and chilled water outlet of each chiller. Additional thermometers shall be installed where indicated on the drawings.

H. The scale range for the thermometers shall be as follows:

Service	Temperature Range	Remarks
Hot Water	30 Degrees F. to 300 Degrees F.	

2.2 PRESSURE GAUGES

A. Furnish and install where indicated on the Drawings and where specified herein, Bourdon tube type pressure gauges as manufactured by Weksler, Trerice, Marsh, or approved equal.

B. All gauges shall be installed so as to be easily readable from the floor. Where conditions are such that gauges on piping would not be readable from the floor, the gauges shall be installed on panelboards.

C. The gauges shall have black glass reinforced polypropylene casings and bezels. The gauges shall have white faces with black numerals and adjustable pointer. The diameter of the dial shall be not less than 4-1/2 inches. Gauges shall have brass bronzed bushed rotary type movement.

D. Panel mounted gauges shall be designed for flush mounting with back connections and shall be provided with an engraved nameplate mounted below each gauge to identify its service.

E. The accuracy of all gauges shall be within 1% of the scale range.

F. All gauges on water lines shall be fitted with filter type pressure snubbers consisting of 3/8" dia. x 1/8" thick, micro metallic stainless steel filter, as provided by the manufacturer of the pressure gauges. All gauges on steam lines shall be fitted with pig-tails.

G. A pressure gauge shall be installed in the suction and discharge of each hot water, chilled water and condenser water pump. A pressure gauge shall be installed in the inlet and outlet of each heat exchanger.

A pressure gauge shall be installed in the inlet and outlet of each heat exchanger. Additional pressure gauges shall be installed where indicated on the Drawings.

H. The scale range of pressure gauges shall be as follows:

Service	Pressure Range
Hot Water	0 to 100 Psig

I. All other pressure gauges shall have a range at least twice the working pressure, but in no case less than 0 to 30 lbs. A ball valve shall be installed on the water side of each gauge. A needle valve shall be installed on the system side of each steam gauge.

2.3 MACHINERY GUARDS

A. Moving parts of machinery exposed to contact by personnel shall be guarded by barrier to a type which complies with OSHA Code.

B. Exposed moving parts such as belts and couplings shall have not less than 3/4" No. 16 gauge metal guards with all edges rounded and gauge, material and construction shall be in accordance with OSHA standards- paragraphs 7173.3, 7173.5 and 7174.1. Guards shall have 1-1/4" x 1-1/4" x 1/8" angle iron frame properly supported.

C. All machinery guards covering the ends of motor or equipment shafts shall have openings for the insertion of a tachometer. Machinery guards shall be painted with two coats of machinery gray enamel.

2.4 EXPANSION TANKS

A. Furnish and install as shown on the Drawings, Pressurized Diagram Type Expansion Tanks as manufactured by Bell & Gossett. It shall be air pre-charged to the initial fill pressure of the system. It shall be suitable for a maximum working pressure of 125 psi and shall be furnished with ASME stamp and certification papers. It shall have a sealed-in elastomer diaphragm for an operating temperature of 240 Degrees F.

2.5 EXPANSION JOINTS, LOOPS, ANCHORS AND GUIDES

A. Provisions for expansion in piping mains, branches, and risers shall be made by the installation of off-sets, expansion loops, or compensators as indicated on the Drawings and as required. Every 100'-0" horizontal steam and hot water piping shall have expansion loop and anchors. Minimum loop shall be 8'-0" by 6'-0" if not indicated on the Drawings.

B. All piping with loops or compensators shall be anchored so as to throw all expansion toward the loops or compensators.

C. Guides shall be installed on both sides of each expansion loop and compensator. Guides shall be Flexonics pipe alignment guides or approved equal. Anchors and guides shall be secured to beams, columns or concrete slabs.

D. Pipe hangers and rollers are not considered guides.

E. Provide 12" long guides for each expansion joint. Guides shall be located 3'-0" on each side of the expansion joints.

F. Furnish and install as shown on plans, or where necessary to absorb max. 1-3/4" expansion and max. 1/4" contraction between two anchor points in copper lines, up to and including 2-1/2", Flexonics Model HB Expansion Compensators having two-ply phosphor bronze bellows and brass shrouds and end fittings, as manufactured by Flexonics Division of Calumet and Heela, Inc., Bartlett, Illinois. All internal parts shall be of non-ferrous metals. Service pressure shall be external to the bellows. Compensators shall have internal positive anti-torque devices to prevent twist or torque on installation and shall have properly located positioning clip to insure installation of correct end-to-end dimension to allow full rated traverse. Compensator shall be for max. 125 psig. working pressure. Test pressure shall not exceed 175 psig.

G. Furnish and install as shown on plans, or where necessary to absorb max. 1-3/4" expansion and max. 1/4" contraction between two anchor points in iron and steel pipe lines up to and including 2-1/2" Flexonics Model II Expansion Compensators having two-ply stainless steel bellows and carbon steel shrouds and end fittings, as manufactured by Flexonics Division of Caumet & Heela, Inc., Bartlett, Illinois.

Service pressure shall be external to the bellows. Compensators shall have properly located positioning clip to insure installation at correct end-to-end dimension to allow full rated traverse. Compensator shall be for Max. 150 psig. working pressure. Test pressure shall not exceed 200 psig.

H. Expansion joints in 3" and above piping shall be hydraulically formed bellows type with internal sleeves and external covers for insulation. Expansion joints, except where otherwise noted, shall be of the self-equalizing type having fully-contoured, cast iron equalizing rings.

I. Provide non-equalizing type expansion joints with internal sleeves on low pressure service) up to 15 psig including test pressure) such as diesel engine exhaust, or flexible cooling tower connections.

J. Manufacturer shall note on all submittal forms the resultant anchor loads due to pressure thrust and compressive forces at design conditions. Expansion joints shall be as manufactured by ADSCO, Zallea, Flexonic, or approved equal.

2.6 AIR VENTS

A. In installing water piping systems and all equipment, carefully plan the actual installation in such a manner that high pints and air pockets are kept to a minimum and are properly vented where they are unavoidable. All air elimination devices called for on the drawings and in these Specifications shall be provided and properly installed. In addition, furnish and install all other air elimination devices which may be required due to job conditions.

Assume responsibility for a proper, continuous and automatic air elimination to assure even and balanced distribution of water to all equipment.

B. Furnish and install an Armstrong No. 1 AV or Sarco 13W automatic air vent with test petcock at each high point in the water piping mains and where indicated on the Drawings. Furnish and install a 125 psig rated valve on the system side of each automatic air vent. Vents on hot water, dual temperature water and chilled water lines shall have Hoke Fig. No. PY-271 valves or approved equal. Vents on all other water lines shall have Hoke Fig. No. RB-271 valves or approved equal.

C. Furnish and install manual air vents Hoffman No. 500 or approved equal, for all upfed radiation. Furnish and install a 125 psig rated ball valve on the system side of each manual air vent. Provide access to all air vents.

2.7 AIR SEPARATORS

A. Furnish and install the air separators for water system where indicated on the drawings. The separators shall be Vortex as manufactured by Armstrong or equal as approved by the Engineer.

B. The units shall be of ASME construction and shall be stamped 125 psig W.P.

C. The units shall be furnished without integral strainers.

D. The units shall be installed in strict accordance with the manufacturer's recommendations.

E. The units shall be supported on 2" pipe legs and shall be provided with a 3/4" drain gate or ball valve with hose end and cap.

2.8 STRAINERS FOR WATER SYSTEM

A. Furnish and install a full-size Y-pattern strainer on the inlet of each control valve and each water pump, where indicated on the drawings.

B. The strainers shall be as manufactured by Spence, Sarco, Barnes and Jones, Elliott, Crane or Mueller.

C. All strainers, except where otherwise noted, shall have bronze body up to 2-1/2", semi-steel above 2-1/2", rated at 125 psig for all systems with 50 psig max. pressure and 250 psig for all others. Strainers 2 inch diameter and smaller shall have screwed ends. Strainers 2-1/2 inch diameter and larger shall have flanged ends.

D. All strainers shall have removable cylindrical or conical screens of brass construction. They shall be designed to allow blowing out of accumulated sediment and to facilitate removal and replacement of the screen without disconnecting the main piping.

E. Screens for water 1/16" for 3" inclusive, 1/8" for 4" and above.

F. An approved blow-out connection with gate valve shall be made to each strainer. The valves shall be located not high than 8 feet above the floor.

2.9 REDUCING AND SAFETY VALVES FOR WATER SYSTEM

A. Furnish and install pressure and safety valves for markup water systems and where indicated on the drawings.

B. The reducing valve shall be Model 7 pressure reducing valve with field adjustable setting as manufactured by Bell & Gossett or equal as approved by the Architect.

C. The safety valves shall be of size and capacity as indicated on the drawings. The valves shall be made by Bell and Gossett or approved equal and shall have 150 pound raised face flange on the inlet and discharge for all sizes 2_1/2" and above 2" and below shall be screwed.

D. The safety valves shall be steel valves with stainless steel trim. The bonnet shall be enclosed and equipped with a packed lifting lever. The spring shall be carbon steel rated for 450 Degrees F.

E. The vertical discharge line from the safety valves and shall be installed as close to the safety valves as possible and piped to drain.

2.10 MECHANICAL PIPE COUPLINGS

A. Mechanical pipe couplings similar to Victaulic shall be used in lieu of welded fittings at this Section's option for the following above ground services:

1. Mechanical couplings are permitted in chilled water, condenser water and hot water systems.

B. Couplings shall be self-centering and shall engage and lock in place the grooved or shouldered pipe and pipe fitting ends in a positive watertight couple. Some degree of angular pipe deflection, contraction and expansion should be allowed.

C. Coupling housing clamps shall be fabricated in two or more parts of malleable iron castings, in accordance with Federal specification QO_I_666C, Grade II. Housing clamps shall hold in place a composition water-sealing gasket designed so that internal water pressure serves to increase the seal's water tightness. Water-sealing gasket shall be of molded synthetic rubber in accordance with ASTM D735-61, Grade No. R615BZ, with special heat-resistance test of 16 hours a 380 deg. F. and maximum elongation change of minus 30 percent.

D. Coupling assembly shall be securely held together by two or more track-head, oval-neck, steel bolts. Bolts and nuts shall be heat-treated carbon steel and shall be in accordance with ASTM A-183-60. Coupling on outdoor piping shall have galvanized bolts and nuts.

E. All pipe fittings used in connection with pipe couplings shall have grooved or shouldered ends and shall be fabricated of malleable iron castings in accordance with Federal Specification QO-1-666C, Grade II, or ductile iron Grade 60-45-10 in accordance with ASTM A-339-55.

F. Before assembling couplings, lightly coat pipe ends and outside of gaskets with cup grease or graphite paste as recommended by vendor, to facilitate installation.

G. Pipe grooving shall be in accordance with the manufacturer's specifications.

H. Pipes, fittings, and valves shall be provided with grooved or shouldered ends in accordance with pipe coupling manufacturer's latest published literature. Flanged or threaded end valves may be used with grooved adapters.

I. Couplings and fitting shall be designed for a system pressure specified elsewhere and in conformance with manufacturer's published data.

J. Entire coupling installation shall be done in accordance with manufacturer's latest published literature.

K. After completion of pipe coupling installation, Contractor shall furnish to the Owner's representative a signed certificate of compliance with the manufacturer's installation instructions.

L. Couplings shall be standard weight as a minimum requirement.

2.11 FLOW MEASURING DEVICES

A. Provide a flow measurement system consisting of permanently mounted flow elements and portable flow meters, with all components supplied by a single manufacturer. Locate flow measuring elements where indicated on schedules and/or drawings and install according to manufacturer's recommendations. The Contractor has the option of providing a venturi type flow measuring system as manufactured by BARCO as an alternative to ANNUBAR.

B. Primary elements shall be the Dieterich Standard ANNUBAR averaging pitot consisting of a high pressure sensor with 4 upstream sensing ports; an interpolating tube to average the upstream readings; a single, center line low pressure port; and an instrument head with quick-disconnecting shut-off valves. The sensor shall be made of 316 stainless steel and of a diamond cross sectional shape to provide accuracy of + 1% of value over a wide range of Reynolds numbers. Accuracy must be verified by independent laboratory tests.

C. Each flow measuring station shall be provided with an indented metal identification tag or chain, giving pipe size, station identification flow rate ad meter reading at special flow rate.

D. Portable meters shall be Dieterich Standard Eagle Eye portable differential pressure meters. Meters shall be composed of a sensing diaphragm magnetically coupled to an indicating needle and scaled in inches of differential pressure. Each portable meter shall be enclosed in a rust-proof carrying case with two 12 foot rubber test hoses and quick-disconnecting valves to match those on ANNUBARS. Units shall contain an integral equalizing valve eliminating the need for "add on" equalizer valves, manifolds, etc. Accuracy of the meter shall be +2% of full scale. Where flowing conditions so dictate low and high range meters will be supplied. A total of two meters shall be provided (one 0-20 "H20 and one 0-50" H20). Ranges shall be as approved by the Architect.

2.12 CALIBRATED BALANCE VALVES (CIRCUIT SETTERS)

A. Furnish and install for each hot water and chilled water coil and where shown on drawings, Model CB calibrated balance valves as manufactured by Bell and Gossett or approved equal.

B. Valves to be designed to allow installing contractor to pre-set balance points for proportional system balance prior to system start-up in accordance with pre-set balance schedule.

C. All valves 1/2" to 3" pipe size to be of bronze body/brass ball construction with glass and carbon filled TFE seat rings. Valves to have differential pressure read-out ports across valve seat area. Read-out ports to be fitted with internal EPT insert and check valve. Valve bodies to have 1/4" NPT tapped drain/purge port. Valves to have memory stop feature to allow valve to be closed for service and then reopened to set point without disturbing balance position. All valves to have calibrated name plate to assure specific valve settings. Valves to be leak-tight at full rated working pressure. Valves 4" pipe size to be of cast iron body/brass vane construction with differential pressure read-out ports fitted with internal EPT insert and check valve.

D. All valves to be provided with molded insulation to permit access for balance and read-out.

PART 3 – EXECUTION

3.1 INSPECTION

A. Contractor shall examine location where these specialties are to be installed and determine space conditions and notify Architect in writing of conditions detrimental to proper and timely completion of the work.

B. Do not proceed with the work until unsatisfactory conditions have been corrected.

3.2 INSTALLATION

A. Install HVAC Specialties where shown, in accordance with manufacturer's written instructions and with recognized industry practices, to ensure that HVAC Specialties comply with requirements and serve intended purposes.

B. Coordinate with other work as necessary to interface installation of HVAC Specialties with other components of systems.

3.3 FIELD QUALITY CONTROL

A. Upon completion of installation of HVAC Specialties, test HVAC Specialties to demonstrate compliance with requirements. When possible, field correct malfunctioning units, then retest to demonstrate compliance. Replace units which cannot be satisfactory corrected.

END OF SECTION 23 80 10

SECTION 23 81 00

VARIABLE REFRIGERANT FLOW SYSTEMS

PART 1 - GENERAL

1.1 RELATED DOCUMENTS

A. All of the Project "General Documents" apply to work specified in this Section; consult them in detail for applicable instructions.

B. Manufacturers referenced in the technical specifications are for the purpose of establishing a standard of quality. Alternate manufacturers providing the same quality materials or equipment will be given consideration by the Architect and/or Engineer if they are notified in writing.

C. Section 23 00 00 - Special Requirements for Mechanical and Electrical Work shall apply.

D. Section 23 00 50 - Vibration Isolation and Seismic Restraints for HVAC, Fire Protection, Electrical and Plumbing shall apply.

1.2 GENERAL

A. In addition to the work covered under this Section, comply with description of individual systems under other Sections of the Specifications.

1.3 DESCRIPTION OF WORK

A. Provide complete Air Source Heat Pump Heating and Cooling with Heat Recovery type Variable Refrigerant Flow (VRF) or Volume (VRV) Systems consisting of one or more outdoor compressor units and multiple indoor fan coil units as specified in this Section and as shown on the plans and as in accordance with the following:
   a. The complete systems must be a tested combination in accordance with AHRI 1230. c. Provide control for each zone.
   b. For systems which simultaneously heat and cool, the outdoor units must be interconnected to the indoor units through branch selector boxes in accordance with the manufacturer's engineering data detailing each indoor unit. The indoor units and outdoor must be connected to the branch selector boxes utilizing the manufacturer's specified piping joints and headers.

1.4 REFERENCES

A. AIR-CONDITIONING, HEATING AND REFRIGERATION INSTITUTE (AHRI)

AHRI 1230 (2010; Addendum 1 2011; Addendum 2 2014) Performance Rating of Variable Refrigerant Flow (VRF) Multi-Split Air-Conditioning and Heat Pump Equipment

ANSI/AHRI 270 (2008) Sound Rating of Outdoor Unitary Equipment
ANSI/AHRI 495 (2005) Performance Rating of Refrigerant Liquid Receivers
ANSI/AHRI 760 (2014) Performance Rating of Solenoid Valves for Use With Volatile Refrigerants

B. AMERICAN SOCIETY OF HEATING, REFRIGERATING AND AIR-CONDITIONING ENGINEERS (ASHRAE)

ANSI/ASHRAE 15 & 34 (2013) ANSI/ASHRAE Standard 15-Safety Standard for Refrigeration Systems and
ANSI/ASHRAE Standard 34-Designation and Safety Classification of Refrigerants
ASHRAE 90.1 - IP (2019) Energy Standard for Buildings Except Low-Rise Residential Buildings

ASHRAE 90.1 - SI (2019) Energy Standard for Buildings Except Low-Rise Residential Buildings
ASHRAE 135 (2020; Interpretation 1-8 2021; Errata 1-2 2021; Addenda CD 2021; Addenda BV-CE 2022; Interpretation 9-12 2022; Interpretation 13-24 2023; Addenda BV-CF 2023; Errata 3 2023) BACnet—A Data Communication Protocol for Building Automation and Control Networks

C. AMERICAN SOCIETY OF MECHANICAL ENGINEERS (ASME)

ASME B31.5 (2022) Refrigeration Piping and Heat Transfer Components
ASME BPVC SEC VIII (2010) Boiler and Pressure Vessel Codes: Section VIII Rules for Construction of Pressure Vessel
ASME BPVC SEC VIII D1 (2019) BPVC Section VIII-Rules for Construction of Pressure Vessels Division 1

D. AMERICAN WELDING SOCIETY (AWS)

AWS A5.8/A5.8M (2019) Specification for Filler Metals for Brazing and Braze Welding
AWS Z49.1 (2021) Safety in Welding and Cutting and Allied Processes

E. ASTM INTERNATIONAL (ASTM)

ASTM A307 (2021) Standard Specification for Carbon Steel Bolts, Studs, and Threaded Rod 60,000 PSI Tensile Strength
ASTM B117 (2019) Standard Practice for Operating Salt Spray (Fog) Apparatus
ASTM D520 (2000; R 2011) Zinc Dust Pigment
ASTM E84 (2023) Standard Test Method for Surface Burning Characteristics of Building Materials
ASTM F104 (2011; R 2020) Standard Classification System for Nonmetallic Gasket Materials

E. CONSUMER ELECTRONICS ASSOCIATION (CEA)

CEA-709.1-D (2014) Control Network Protocol Specification

F. MANUFACTURERS STANDARDIZATION SOCIETY OF THE VALVE AND FITTINGS INDUSTRY (MSS)

MSS SP-58 (2018) Pipe Hangers and Supports - Materials, Design and Manufacture, Selection, Application, and Installation

G. NATIONAL ELECTRICAL MANUFACTURERS ASSOCIATION (NEMA)

NEMA 250 (2020) Enclosures for Electrical Equipment (1000 Volts Maximum)
NEMA MG 1 (2021) Motors and Generators
NEMA MG 2 (2014) Safety Standard for Construction and Guide for Selection, Installation and Use of Electric Motors and Generators

H. NATIONAL FIRE PROTECTION ASSOCIATION (NFPA)

NFPA 70 (2020) National Electrical Code

I. UNDERWRITERS LABORATORIES (UL)

UL 207 (2022) UL Standard for Safety Refrigerant-Containing Components and Accessories, Nonelectrical
UL 429 (2013; Reprint Mar 2021) Electrically Operated Valves
UL 586 (2009; Reprint Sep 2022) UL Standard for Safety High-Efficiency Particulate, Air Filter Units
UL 900 (2015; Reprint Aug 2022) UL Standard for Safety Standard for Air Filter Units
UL 1995 (2015; Reprint Aug 2022) UL Standard for Safety Heating and Cooling Equipment

1.5 SUBMITTALS

A. The following submittals are required in addition to submittals specified in Section 23 09 00 INSTRUMENTATION AND CONTROL FOR HVAC. Submittals specified in Section 23 09 00 INSTRUMENTATION AND CONTROL FOR HVAC are required for the VRF system.

1. Preconstruction Submittals
   a. Qualification Of Installer
   b. Verification Of Existing Conditions
2. Shop Drawings
   a. VRF System Contractor Design Drawings
   b. VRF System(s) Piping Diagrams
   c. VRF System(s) Power Wiring Diagrams
   d. VRF System(s) Control Wiring Diagrams
3. Product Data
   a. Spare Parts Data
   b. Coil Corrosion Protection
   c. Manufacturer's Standard Catalog Data
   d. Sample Warranty
   e. Refrigerant SDS Sheets
4. Design Data
   a. Manufacturer's Engineering Data
5. Test Reports
   a. System Performance Tests
6. Certificates
   a. Service Organizations
   b. Warranty
   c. Electronic Refrigerant Leak Detector Calibration
   d. Ozone Depleting Substances Technician Certification
7. Manufacturer's Instructions
8. Manufacturer's Field Reports
   a. Refrigerant Charging
9. Closeout Submittals
   a. Posted Instructions
   b. Inventory

1.6 QUALITY ASSURANCE

A. Complete VRF systems must be purchased from a single supplier. The VRF system supplier must be responsible for providing a fully functional VRF system.

1.7 VRF SYSTEM CONTRACTOR DRAWINGS

A. Submit VRF System Contractor Design Drawings prior to purchasing the VRF components in a single transmittal. Equipment layouts must be drawn to scale. Shop drawings must be approved by the VRF manufacturer’s representative. Include approval with name and contact information of VRF manufacturer's representative in the submittal. Place separation sheets before each of the following items covering each item with title and number.

1. Equipment layouts which identify assembly and installation details. Identify scheduled items with indicating marks. Include manufacturer's selection report for equipment, components and fittings.
2. Plans and elevations which identify dimensioned clearances required for maintenance and operation. Show access panels with dimensions.
3. Foundation drawings, bolt-setting information, and foundation bolts.
4. Details which include loadings and type of frames, brackets, stanchions, guides, anchors or other supports.
5. Installation details which includes refrigerant type and charge weight for the system (not only the factory-supplied outdoor unit). Indicate factory setpoints for superheat/subcooling, target

evaporating/condensing and corresponding refrigerant pressures/temperatures. Also include saturation reset schedule.

6. Refrigerant piping system plans as required. Piping layouts must be to scale and piping must have radial and linear dimensions identifying pipe type. Identify each refrigerant circuit and indicate refrigerant type and mass. Indicate piping expansion components and directions of thermal expansion. Piping layouts must be in accordance with ANSI/ASHRAE 15 & 34.
7. Schedules of equipment, valves, and manufacturer fittings. Mark each item with a common type identifier and unique number.
8. Calculations for refrigerant mass and pipe expansion.
9. Sequence of Operations of system and components.
10. Calculations demonstrating compliance with ANSI/ASHRAE 15 & 34.

1.8 QUALITY CONTROL

A. Submit 3 copies of qualifications prior to installation. The installers must be trained and qualified to install the same type of VRF system components to be installed under this contract by the same manufacturer. Include training certificates in submittal. The installer must have performed three complete installations of VRF systems of the same type and manufacturer that resulted in successful commissioning. Include project VRF installation and product information, location, customer contact information and VRF manufacturer representative contact information. The customer and VRF representative will be contacted to validate information given.

B. Ozone Depleting Substances Technician Certification
All technicians working on equipment that contain ozone depleting refrigerants must be certified as a Section 608 Technician to meet requirements in 40 CFR 82, Subpart F. Provide copies of technician certifications to the Contracting Officer at least 14 calendar days prior to work on any equipment containing these refrigerants. If all products do not contain any refrigerants identified in 40 CFR 82, submit all refrigerant SDS sheets and a general statement of exemption from 40 CFR 82 in alternate to the certifications. Statement of exemption must indicate all equipment containing refrigerants with respective refrigerant types.

C. Standard Products
Provide materials and equipment that are standard products of a manufacturer regularly engaged in the manufacturing of such products, which are of a similar material, design and workmanship. The standard products must have been in satisfactory commercial or industrial use for 3 years immediately prior to the solicitation of this contract. The 3 year use includes applications of equipment and materials under similar circumstances and of similar size. The 3 years' experience must be satisfactorily completed by a product which has been sold on the commercial market through advertisements, manufacturer's catalogs, or brochures. Products must be supported by a service organization. Ensure system components are environmentally suitable for the indicated geographic locations.

D. Manufacturer's Engineering Data
Submit VRF manufacturer's engineering data with the shop drawings under separate cover. Strike out irrelevant items and options not to be installed. Provide all input and output reports for all selection procedures required by the manufacturer and as required by this section. Engineering data must include:

1. Selection Procedures:
   a. Indoor and Outdoor Units
   b. Branch Selector Units
   c. Piping Material and Fittings
   d. Refrigerant Mass for system
   e. Refrigerant Classification
2. System Efficiency Curves/Data including:
   a. Efficiency correlated with OAT
   b. At least five (5) data points covering full range of operation
   c. Minimum and maximum values over the operational range
   d. Efficiency at Standard AHRI conditions.

E. Manufacturer's Instructions
Submit VRF manufacturer's instructions with the shop drawings under separate cover. Strike out irrelevant items and options not to be installed. Provide with the following:
1. Installation: Include mechanical, electrical, controls and piping complete installation requirements.
2. Operation: Include startup, normal operation and shutdown procedures.
3. Maintenance: Include preventative.

1.9 DELIVERY, STORAGE, AND HANDLING
Protect stored items from the weather, humidity and temperature variations, dirt and dust, or other contaminants. Properly protect and care for all material both before and during installation. Submit an inventory of all the stored items. Replace any materials found to be damaged, at no additional cost to the Government. During installation, keep piping and similar openings capped to keep out dirt and other foreign matter.

1.10 WARRANTY
Provide VRF manufactured equipment with the Manufacturer's Standard Warranty in addition to the Warranty of Construction. Submit Sample Warranty prior to construction. Compare warranty requirements with the requirements of this contract and identify discrepancies in the submittal that would prevent coverage of warranty by the manufacturer.

PART 2 – PRODUCTS

2.1 MATERIALS
Provide Manufacturer's standard catalog data, at least 5 weeks prior to the purchase or installation of a particular component, highlighted to show material, size, options, performance charts and curves, in adequate detail to demonstrate compliance with contract requirements. If field installed vibration isolation is specified for a unit, include vibration isolator literature containing catalog cuts and certification that the isolation characteristics of the isolators provided meet the manufacturer's recommendations. Submit data for each specified component. Minimum efficiency requirements must be in accordance with ASHRAE 90.1 - SI ASHRAE 90.1 - IP.

2.2 ELECTRICAL EQUIPMENT / MOTORS

A. Provide electrical equipment, motors, motor efficiencies, and wiring which are in accordance with Code. Electrical motor driven equipment specified must be provided complete with motors, motor starters, and controls. Electrical characteristics must be as shown, and unless otherwise indicated and field wiring must be in accordance with manufacturer's instructions. All motor(s):
1. 746 W 1 horsepower and above must be the premium efficiency type in accordance with NEMA MG 1.
2. Conform to NEMA MG 1 and NEMA MG 2 and be of sufficient size to drive the equipment at the specified capacity without exceeding the nameplate rating.
3. Continuous duty with the enclosure specified.
4. Starters must be provided complete with thermal overload protection and other appurtenances necessary for the motor control indicated.
5. Furnished with a magnetic across-the-line or reduced voltage type starter as required by the manufacturer.
6. Duty requirements must allow for maximum frequency start-stop operation and minimum encountered interval between start and stop.
7. Must be sized for all applicable loads.
8. Bearings with grease supply fittings must have grease relief to outside of enclosure.
9. Control and protective or signal devices required for the operation specified and any control wiring required for controls and devices specified, but not shown, must be provided.

2.3 REFRIGERANT
Refrigerants must have number designations and safety classifications in accordance with ANSI/ASHRAE 15 & 34. Provide Refrigerant SDS sheets for all refrigerants.

2.4 SAFETY DEVICES

Exposed moving parts, parts that produce high operating temperature, parts which may be electrically energized, and parts that may be a hazard to operating personnel must be insulated, fully enclosed, guarded, or fitted with other types of safety devices.

2.5 CONTROLS

The control system, components and network must be in accordance contract requirements.

A. Zone Control

Provide a Space Sensor Module, in accordance with Section 23 09 13 INSTRUMENTATION AND CONTROL DEVICES FOR HVAC, for each fan coil unit unless otherwise indicated in contract drawings and with the following additional requirements:

1. Displays the current temperature, temperature setpoint, fans status, occupancy status and conditioning mode at the same time. If information is displayed electronically then it must be illuminated.
2. Temperature setpoint adjustment in one degree increments.
3. Fans speed control (At least: High-low-Auto).
4. Occupancy override button which changes the mode of the zone to occupied for one hour per press of occupancy override button with 3 hours maximum at any instance.

2.6 INDOOR FAN COIL UNITS

A. Provide with the following:

1. Factory complete, tested and pre-wired with all necessary electronic and refrigerant controls.
2. Equipped with auto-restart function and test run capability either viaa switch or controller.
3. Refrigerant: Refrigerant circuits factory-charged with dehydrated inert gas.
4. Coils: Direct expansion type constructed from copper, aluminum, or copper and aluminum.
5. Fans: Direct-drive, with statically and dynamically balanced impellers; variable speed ECM or multi-speed supporting at least high and low speeds, unless otherwise indicated; motor thermally protected.
6. Return Air Filter: Washable long-life net filter with mildew proof resin, or replaceable, unless otherwise indicated.
7. Condensate Drainage: Built-in condensate drain pan with drain connection.
8. Dedicated electronic modulating refrigerant expansion and flow control.
9. Unit must be in accordance with UL 1995 and AHRI 1230.
10. For units with Built-In Condensate Pumps, provide condensate safety shutoff and alarm. For units without Built-In Condensate Pump, provide built in or field supplied overflow protection.

B. Concealed-In-Ceiling Units

Provide with the following:

1. Ducted horizontal discharge and return; galvanized steel cabinet in accordance with Section 23 84 00 HVAC DUCTWORK
2. Field adjustable external static pressure switch for high efficiency filter operation.
3. Switch box accessible from side or bottom.

C. Recessed Ceiling Units

Provide with the following:

1. Four-way airflow cassette with central return air grille, for installation in a fixed ceiling, unless otherwise indicated.
2. Exposed Housing: White, impact resistant, with washable decoration panel.
3. Supply Airflow Adjustment:
   a. Louvers which can be horizontally and vertically adjusted from 0 to 90 degrees.
   b. Field-modifiable to 3-way and 2-way airflow.

D. Wall Surface-Mounted Units
1. Finished white casing, with removable front grille; sound insulation; wall mounting plate; condensate drain pan.
2. Airflow Control: Auto-swing louver that closes automatically when unit stops; adjustable discharge angle, set using remote controller; upon restart, discharge angle defaulting to same angle as previous operation.
3. Fan: Direct-drive cross-flow type.
4. Condensate Drain Connection: Side (end), concealed in wall.

2.7. OUTDOOR COMPRESSOR UNIT
A. Provide with the following:
1. The outdoor unit must have one or more variable capacity compressors or alternative method resulting in three or more steps of capacity needed to load match the indoor unit fan coils at all times.
2. The unit must be factory complete, tested and pre-wired with all necessary electronic and refrigerant controls.
3. The sound pressure dB(A) at rated conditions must be a value of 58 decibels at 1 meter 3 feet from the front of the unit when rated in accordance with ANSI/AHRI 270.
4. The unit must automatically restart normal operation after a power failure of any duration without reprogramming or manual assistance.
5. Oil recovery cycle must be automatic occurring a minimum of 2 hours after start of operation and then at least every 8 hours of operation.
6. Each outdoor unit must have it's own dedicated power feed, each with disconnect and main power circuit breaker.
7. The unit must be in compliance with ANSI/ASHRAE 15 & 34, factory tested, cleaned, dehydrated, charged, and sealed. Provide refrigerant charging valves. Filter-drier must be provided in liquid line.
8. The outdoor units capacity must meet or exceed the scheduled value in the contract drawings. The ratio of the outdoor unit capacity to the total connected indoor capacity must be in accordance with the manufacturer's recommendations for selecting the outdoor unit.
9. Unit must be in accordance with UL 1995 and AHRI 1230.

B. AIR-COOLED
1. The unit must have full design cooling capacity at 87 degrees F dry bulb ambient.
2. For units other than cooling only, the unit must have full design heating capacity at 10 degrees F dry bulb ambient.

C. CASING
Construct the unit of zinc coated, heavy-gage (14-gage minimum) galvanized steel. Provide cabinet panels with lifting handles and water- and air-tight seal. Insulate all exposed vertical panels, top covers and base pan.

D. Compressor
Each compressor system must have the following:
1. High pressure safety switch, and internal thermal overload protection.
2. Factory installed vibration dampeners on all mounting points.
3. Factory installed crank case heater or other control logic to ensure reliable operation in freezing environments.
4. Oil separator with an oil balance circuit.

E. COMPONENTS
1. Fans
Fan wheel shafts must be supported by either maintenance-accessible lubricated antifriction block-type bearings, or permanently lubricated ball bearings. Unit fans must be selected to produce the flow rate required at the fan total pressure. Motor starters, if applicable, must be magnetic across-the-line type with an enclosed enclosure. Thermal overload protection must be of the manual or automatic-reset type. Fan wheels or propellers must be constructed of aluminum

or galvanized steel. Centrifugal fan wheel housings must be of galvanized steel, and both centrifugal and propeller fan casings must be constructed of aluminum or galvanized steel. Steel elements of fans, except fan shafts, must be hot-dipped galvanized after fabrication or fabricated of mill galvanized steel. Mill-galvanized steel surfaces and edges damaged or cut during fabrication by forming, punching, drilling, welding, or cutting must be recoated with an approved zinc-rich compound. Fan wheels or propellers must be statically and dynamically balanced. Direct-drive fan motors must be of the multiple-speed variety. Belt-driven fans must have adjustable sheaves to provide not less than 10% percent fan-speed adjustment. The sheave size must be selected so that the fan speed at the approximate midpoint of the sheave adjustment will produce the specified air quantity. Centrifugal scroll-type fans must be provided with streamlined orifice inlet and V-belt drive. Each drive will be independent of any other drive. Propeller fans must be direct-drive drive type with fixed pitch blades. Each drive will be independent of any other drive. Drive bearings must be protected with water slingers or shields. Axial fans may not be used to distribute air through duct systems.

2. Supplemental Electric Heating Coil
   Coil must be an electric duct heater in accordance with UL 1995 and NFPA 70. Coil must be duct- or unit-mounted. Coil must be of the nickel chromium resistor, single stage, strip type. Coil must be provided with a built-in or surface-mounted high-limit thermostat interlocked electrically so that the coil cannot be energized unless the fan is energized. Coil casing and support brackets must be of galvanized steel or aluminum. Coil must be mounted to eliminate noise from expansion and contraction and be completely accessible for service. Supplemental Electric Resistance Heating controls must be provided to prevent operation when the heating load can be met by the primary source alone during both steady-state operation and setback recovery. Supplemental heater operation is permitted during outdoor coil defrost cycles.
3. Air Filters
   Air filters must be listed in accordance with requirements of UL 900, except high efficiency particulate air filters of 99.97 percent efficiency must be as listed under the label service and must meet the requirements of UL 586.
4. Coil Frost Protection (Defrost Mode)
   Provide each circuit with a manufacturer's standard coil frost protection (Defrost Mode) system.
5. Pressure Vessels
   Pressure vessels must conform to ASME BPVC SEC VIII D1 or UL 207, as applicable for maximum and minimum pressure or temperature encountered. Where referenced publications do not apply, test pressure components at 1-1/2 times design working pressure.
   a. Liquid Receiver
      Receiver must be rated in accordance with the recommendations of ANSI/AHRI 495.
   b. Suction Accumulator
      Accumulators must comply with UL 207. Accumulators over 15 cm 6 inch in diameter must comply with ASME BPVC SEC VIII.
      (1) Vertical Type
         Provide heat exchanger or heating element around the U-tube in freezing environments.
      (2) Horizontal Type
         Provide only in non-freezing environments.
   c. Oil Separator
      Separator must be the high efficiency type and be provided with removable flanged head for ease in removing float assembly and removable screen cartridge assembly. Connections to compressor must be as recommended by the compressor manufacturer. Separator must be provided with an oil float valve assembly or needle valve and orifice assembly, drain line shutoff valve, sight glass and strainer. Provide an oil separator for each refrigerant circuit.
   d. Oil Reservoir
      Reservoir capacity must equal one charge of all connected compressors. Reservoir must be provided with an external liquid gauge glass, plugged drain, and isolation valves. Vent piping between the reservoir and the suction header must be provided with a 35 kPa 5

psi pressure differential relief valve. Reservoir must be provided with the manufacturer's standard filter on the oil return line to the oil level regulators.

e. Internal Dampers
Dampers must be parallel blade type with renewable blade seals and be integral to the unitary unit. Damper provisions must be provided for each outside air intake, exhaust, economizer, and mixing boxes. Dampers must have minimum position stops and be linked together with automatic modulation and operate as specified.

f. Mixing Boxes
Mixing boxes must match the base unit in physical size and must include equally-sized with flanged] openings, each capable of full air flow. Mixing boxes shall be lined with 1” acoustic lining. Arrangements as indicated on plans.

g. Refrigerant Piping
Provide refrigerant piping external to equipment in accordance with Section 23 23 00 REFRIGERANT PIPING.

h. Condensate Drain Piping
Provide condensate drain piping in accordance with Code.

i. Ductwork
Provide interface to ductwork in accordance with Section 23 84 00 DUCTWORK.

j. Refrigerant Solenoid Valves
Solenoid valves must comply with ANSI/AHRI 760 and UL 429, be suitable for continuous duty rated voltage at maximum and minimum encountered pressure and temperature service conditions. Solenoid valves must be direct-acting pilot-operating type, packless, seal capped. Manual lifting provisions must be furnished. Solenoid coils must comply with NEMA 250 type 4. Valves must have safe working pressure of 125 percent of maximum working pressure and a maximum operating pressure differential of at least half of the valve maximum working pressure at 85 percent rated voltage. Valves must have an operating pressure differential suitable for the fluid phase and refrigerant used.

k. Branch Selector Unit
Branch Selector port control must be provided for each connected indoor unit to enable individual heating and cooling selection year-round unless otherwise indicated in the contract drawings. The cabinet must be galvanized steel. The branch selector units must be factory assembled, wired, piped and run tested.

2.8 EQUIPMENT ACCESSORIES AND MISCELLANEOUS EQUIPMENT

A. Refrigerant Relief Valve/Rupture Disc Assembly
The assembly must be a combination pressure relief valve and rupture disc designed for refrigerant usage. The assembly must be in accordance with ASME BPVC SEC VIII D1 and ANSI/ASHRAE 15 & 34. The assembly must be provided with a pressure gauge assembly which will provide local indication if a rupture disc is broken. Rupture disc must be the non-fragmenting type.

B. Refrigerant Signs
Refrigerant signs must be a medium-weight aluminum type with a baked enamel finish. Signs must be suitable for indoor or outdoor service. Signs must have a white background with red letters not less than 13 mm 0.5 inches in height.

1. Installation Identification
Provide each new refrigeration system with a refrigerant sign which indicates the following as a minimum:
   a. Contractor's name.
   b. Refrigerant number and amount of refrigerant.
   c. The lubricant identity and amount.
   d. Field test pressure applied.

C. Controls and Piping Identification
Provide refrigerant systems containing more than 50 kg 110 lb of refrigerant with refrigerant signs which designate the following as a minimum:

1. Valves or switches for controlling the refrigerant flow and the refrigerant compressor.
2. Pressure limiting device(s).

D. Gaskets
Provide gaskets conforming to ASTM F104 - classification for compressed sheet with nitrile binder and acrylic fibers for maximum 370 degrees C 700 degrees F service.

E. Bolts and Nuts
Bolts and nuts must be in accordance with ASTM A307. The bolt head must be marked to identify the manufacturer and the standard with which the bolt complies in accordance with ASTM A307.

F. FINISHES
1. Coil Corrosion Protection
Provide coil with a uniformly applied epoxy electrodeposition, phenolic, or vinyl type coating to all coil surface areas without material bridging between fins. Submit product data on the type coating selected, the coating thickness, the application process used, the estimated heat transfer loss of the coil, and verification of conformance with the salt spray test requirement. Coating must be applied at either the coil or coating manufacturer's factory. Coating process must ensure complete coil encapsulation. Coating must be capable of withstanding a minimum 1,000 hours exposure to the salt spray test specified in ASTM B117 using a 5 percent sodium chloride solution.

G. Equipment and Components Factory Coating
Unless otherwise specified, equipment and component items, when fabricated from ferrous metal, must be factory finished with the manufacturer's standard finish, except that items located outside of buildings must have weather resistant finishes that will withstand [100] [500] hours exposure to the salt spray test specified in ASTM B117. Immediately after completion of the test, the specimen must show no signs of blistering, wrinkling, cracking, or loss of adhesion and no sign of rust creepage beyond 3 mm 1/8 inch on either side of the scratch mark. Cut edges of galvanized surfaces where hot-dip galvanized sheet steel is used must be coated with a zinc-rich coating conforming to ASTM D520, Type I. Where stipulated in equipment specifications of this section, coat finned tube coils of the affected equipment as specified below. Apply coating at the premises of a company specializing in such work. Degrease and prepare for coating in accordance with the coating applicator's procedures for the type of metals involved. Completed coating must show no evidence of softening, blistering, cracking, crazing, flaking, loss of adhesion, or "bridging" between the fins.
1. Phenolic Coating
Provide a resin base thermosetting phenolic coating. Apply coating by immersion dipping of the entire coil. Provide a minimum of two coats. Bake or heat dry coils following immersions. After final immersion and prior to final baking, spray entire coil with particular emphasis given to building up coating on sheared edges. Total dry film thickness must be 0.064 to 0.076 mm 2.5 to 3.0 mils.
2. Chemical Conversion Coating with Polyelastomer Finish Coat
Dip coils in a chemical conversion solution to molecularly deposit a corrosion resistant coating by electrolysis action. Chemical conversion coatings must conform to MIL-DTL-5541, Class 1A. Cure conversion coating at a temperature of 43 to 60 degrees C 110 to 140 degrees F for a minimum of 3 hours. Coat coil surfaces with a complex polymer primer with a dry film thickness of 0.025 mm 1 mil. Cure primer coat for a minimum of 1 hour. Using dip tank method, provide three coats of a complex polyelastomer finish coat. After each of the first two finish coats, cure the coils for 1 hour. Following the third coat, spray a fog coat of an inert sealer on the coil surfaces. Total dry film thickness must be 0.064 to 0.076 mm 2.5 to 3.0 mils. Cure finish coat for a minimum of 3 hours. Coating materials must have 300 percent flexibility, operate in temperatures of minus 46 to plus 104 degrees C 50 to plus 220 degrees F, and protect against atmospheres of a pH range of 1 to 14.
3. Vinyl Coating
Apply coating using an airless fog nozzle. For each coat, make at least two passes with the nozzle. Materials to be applied are as follows:
a. Total dry film thickness, 0.165 mm 6.5 mils maximum
b. Vinyl Primer, 24 percent solids by volume: One coat 0.051 mm 2 mils thick
c. Vinyl Copolymer, 30 percent solids by volume: One coat 0.114 mm 4.5 mils thick

H. Factory Applied Insulation
Refrigeration equipment must be provided with factory installed insulation on surfaces subject to sweating including the suction line piping. Where motors are the gas-cooled type, factory installed insulation must be provided on the cold-gas inlet connection to the motor in accordance with manufacturer's standard practice.

Factory insulated items installed outdoors are not required to be fire-rated. As a minimum, factory insulated items installed indoors must have a flame spread index no higher than 75 and a smoke developed index no higher than 150. Factory insulated items (no jacket) installed indoors and which are located in air plenums, in ceiling spaces, and in attic spaces must have a flame spread index no higher than 25 and a smoke developed index no higher than 50. Flame spread and smoke developed indexes must be determined by ASTM E84. Insulation must be tested in the same density and installed thickness as the material to be used in the actual construction. Material supplied by a manufacturer with a jacket must be tested as a composite material. Jackets, facings, and adhesives must have a flame spread index no higher than 25 and a smoke developed index no higher than 50 when tested in accordance with ASTM E84.

2.9 TESTS, INSPECTIONS, AND VERIFICATIONS

All manufactured units must be inspected and tested, and documentation provided to demonstrate that each unit is in compliance with applicable ANSI/AHRI and UL requirements and that the minimum efficiency requirements of ASHRAE 90.1 - SI ASHRAE 90.1 - IP have been met.

PART 3 – EXECUTION

3.1 EXAMINATION

After becoming familiar with all details of the work, submit verification of existing conditions at least 2 weeks prior to beginning construction, indicating the date the site was visited, confirming existing conditions, and noting any discrepancies found.

3.2 INSTALLATION

The VRF system must be installed by the contractor identified in Qualification Of Installer. The contractor must install the VRF system in accordance with the manufacturer's instructions and Shop Drawings.

A. Equipment General
Provide necessary supports for all equipment, appurtenances, and pipe as required. Isolate outdoor units from the building structure. If mechanical vibration isolators are not provided, provide vibration absorbing foundations. Each foundation must include isolation units consisting of machine and floor or foundation fastenings, together with intermediate isolation material. In lieu of concrete pad foundation, concrete pedestal block with isolators placed between the pedestal block and the floor may be provided. Concrete pedestal block must be of mass not less than three times the equipment weight. Concrete for foundations must be as specified in Section CAST-IN-PLACE CONCRETE. Equipment must be properly leveled, aligned, and secured in place in accordance with manufacturer's instructions. Air-source outdoor units must be installed per manufacturer's recommendations and must not blow air in the direction of other outdoor unit intakes.

B. Safety Devices
Safety devices must be installed so that proper operation of equipment is not impaired. Welding and cutting safety requirements must be in accordance with AWS Z49.1.

C. Controls

Install Controls in accordance contract requirements and to provide the following functionality:

1. On/Off selection for each individual fan coil unit and group.
2. Temperature set point adjustment for each fan coil unit.
3. Fan speed adjustment for each fan coil.
4. Heat/cool/automatic changeover mode selection for indoor and outdoor units.
5. Priority settings for restriction of local access for start/stop, heat/cool mode and set point adjustment.
6. Temperature limitation in both heating and cooling mode.
7. Weekly occupancy schedule with startup and shut off times, temperature settings and operation modes. Yearly occupancy schedule for holidays and periods of non-use.
8. Reset for non-blocking malfunction codes and maintenance warnings. Provide a Local Display panel as indicated on the points schedule and to provide access to the above specified functionality. The Local Display Panel must additionally indicate current date and time.

D. Electrical Equipment / Motors

Install electrical equipment, motors, motor efficiencies, and wiring in accordance with Section 26 20 00 INTERIOR DISTRIBUTION SYSTEM.

E. Branch Selector Unit

Locate Branch Selector Units inside of the facility with full access for inspection, maintenance and removal. Locate no more than 2 meters 6 feet above finished floor. The unit must have a minimum clearance of 30 centimeters 12 inches from all serviceable sides and be removable without modification to the surroundings.

F. Condensate Removal

Provide condensate removal through gravity flow where possible. Where gravity flow is not possible, provide a condensate pump sufficient ensure complete removal of condensate.

G. Access Panels

Provide access panels for all concealed equipment, valves, controls, dampers, refrigerant fittings, and other fittings for inspection, maintenance and removal. Size panel large enough as to be able to remove the part without modification or damage to the surroundings.

H. Air Filters

Allow access space for servicing filters. Install filters with suitable sealing to prevent bypassing of air. Perform and document that proper indoor air quality during construction procedures have been followed in accordance with Section SUSTAINABILITY REQUIREMENTS AND REPORTING, paragraph Indoor Air Quality During Construction; this includes providing documentation showing that after construction ends, and prior to occupancy, new filters were provided and installed.

I. Flashing and Pitch Pockets

Provide flashing and pitch pockets for equipment supports and roof penetrations and flashing where piping or ductwork passes through exterior walls in accordance with Section FLASHING AND SHEET METAL.

J. Identification Tags and Plates

Provide equipment, gages, thermometers, valves, and controllers with tags numbers stamped or engraved into the material for their use. Provide plates and tags of brass or suitable nonferrous rigid material, securely mounted or attached. Provide minimum letter and numeral size of 3.18 mm 1/8 inch high.

K. Refrigerant Signs

Locate refrigerant signs with in reading distance of outdoor unit.

L. Field Applied Insulation

Apply field applied insulation as specified in INSULATION FOR MECHANICAL SYSTEMS, except as defined differently herein.

M. Piping

1. Pipe Hangers and Supports

Design and fabrication of pipe hangers, supports, and welding attachments must conform to MSS SP-58. Installation of hanger types and supports for bare and covered pipes must conform to MSS SP-58 for the system temperature range. Unless otherwise indicated, horizontal and vertical piping attachments must conform to MSS SP-58.

2. Refrigerant Piping
Cut pipe to measurements established at the site and work into place without springing or forcing. Install piping with sufficient flexibility to provide for expansion and contraction due to temperature fluctuation and as indicated in shop drawings. Where pipe passes through building structure pipe joints must not be concealed, but must be located where they may be readily inspected. Install piping to be insulated with sufficient clearance to permit application of insulation. Install piping as indicated and detailed, to avoid interference with other piping, conduit, or equipment. Except where specifically indicated otherwise, run piping plumb and straight and parallel to walls and ceilings. Provide sleeves of suitable size for lines passing through building structure. Braze refrigerant piping with silver solder complying with AWS A5.8/A5.8M. Inside of tubing and fittings must be free of flux. Clean parts to be jointed with emery cloth and keep hot until solder has penetrated full depth of fitting and extra flux has been expelled. Cool joints in air and remove flame marks and traces of flux. During brazing operation, prevent oxide film from forming on inside of tubing by slowly flowing dry nitrogen through tubing to expel air. Make provisions to automatically return oil on halocarbon systems. Installation of piping must comply with ASME B31.5. All refrigerant lines external to units must have field applied insulation per INSULATION FOR MECHANICAL SYSTEMS unless otherwise indicated. All refrigerant lines external to units must be isolated from system vibrations including those generated by compressors, fans, or pumps, to minimize the risk of refrigerant leaks.

N. Auxiliary Drain Pans, Drain Connections, And Drain Lines
Provide auxiliary drain pans under units located above finished ceilings or over mechanical or electrical equipment. Pan must extend beyond the limits of the units. Provide separate drain lines for the unit drain and auxiliary drain pans. Trap drain pans from the bottom to ensure complete pan drainage. Provide drain lines full size of drain opening. Traps and piping to drainage disposal points must conform to Code.

3.3 REFRIGERANT PIPING TESTS

Perform refrigerant piping tests as specified in Section 23 23 00 REFRIGERANT PIPING and per manufacturer's recommendations in the presence of the contracting officer. Use electronic type leak detector with a sensitivity of 3 grams/year 0.1 ounces/year and a calibrated reference leak rated at 5 grams/year 0.17 ounces/year. Submit current electronic refrigerant leak detector calibration certificate prior to testing. Before testing the refrigerant piping system, perform a test of the leak detector with the reference leak fitting in the presence of the Contracting Officer.

3.4 REFRIGERANT CHARGING

After refrigerant piping test and before system performance test, perform evacuation and dehydration procedures in accordance with manufacturers recommendations and requirements and Section 23 23 00 REFRIGERANT PIPING. Evacuate system to a minimum of 100 microns 0.004 inches Hg for one hour or per manufacturers requirements. Use fresh oil in the vacuum pump. Connect electronic vacuum gauge to system piping for measurement. The refrigerant must be to the weight specified in the shop drawing calculations. The supplemental refrigerant must be weighed in with an electronic scale. Supplemental refrigerant must be introduced to the system in a liquid state for refrigerant blends. Conduct refrigerant charging in the presence of the Contracting Officer. Submit refrigerant charging report before system performance test. Outline refrigerant charging procedures in the report. Report must indicated who performed and witnessed the task. Provide signatures from all parties.

3.5 SYSTEM PERFORMANCE TESTS

Before each VRF system is accepted, conduct tests to demonstrate the general operating characteristics of the VRF as directed by COR/COTR. Submit 3 bound copies of the report as 8-1/2 by 11-inch booklets. The report must document compliance with the specified performance criteria upon completion and testing of the system. The report must indicate the number of days covered by the tests and any conclusions as to the adequacy of the system. Include manufacturer commissioning report for each VRF system. For equipment providing heating and cooling the system performance tests must be performed during the heating and cooling seasons. For systems capable of simultaneous heating and cooling, perform testing of this mode.

1. Submit a schedule, at least 2 weeks prior to the start of related testing, for the system performance tests. The schedules must identify the proposed date, time, and location for each test. Tests must cover a period of not less than 24 hours for each system and must demonstrate that the entire system is functioning in accordance with the drawings and specifications.
2. Make corrections and adjustments, as necessary, tests must be re-conducted to demonstrate that the entire system is functioning as specified. Prior to acceptance, install and tighten service valve seal caps and blanks over gauge points.
3. If tests do not demonstrate satisfactory system performance, correct deficiencies and retest the system. Conduct tests in the presence of the Contracting Officer. Water and electricity required for the tests will be furnished by the Government. Provide all material, equipment, instruments, and personnel required for the test.
4. Coordinate field tests with BUILDING COMMISSIONING and TESTING, ADJUSTING, AND BALANCING OF HVAC SYSTEMS. Submit 3 copies of the report provided in bound 8-1/2 by 11 inch booklets. The report must document compliance with the specified performance criteria upon completion and testing of the system. The report must indicate the number of days covered by the tests and any conclusions as to the adequacy of the system. Submit the report including the following information (where values are taken at least three different times at outside dry-bulb temperatures that are at least 3 degrees C 5 degrees F apart):
   a. Date and outside weather conditions.
   b. The load on the system based on the following:
      (1) The refrigerant used in the system.
   c. Condensing temperature and pressure.
   d. Suction temperature and pressure.
   e. Ambient, condensing and coolant temperatures.
   f. Running current, voltage and proper phase sequence for each phase of all motors.
   g. The actual on-site setting of operating and safety controls.
   h. Electronic expansion valve superheat - value as determined by field test.
   i. Subcooling.
   j. High and low refrigerant temperature switch set-points
   k. Low oil pressure switch set-point.
   l. Defrost system timer and thermostat set-points.
   m. Moisture content.
   n. Capacity control set-points.
   o. Field data and adjustments which affect unit performance and energy consumption.
   p. Field adjustments and settings which were not permanently marked as an integral part of a device.

3.6 CLEANING

Equipment must be wiped clean, with all traces of oil, dust, dirt, or paint spots removed. Temporary filters must be provided for all fans that are operated during construction, and new filters must be installed after all construction dirt has been removed from the building. System must be maintained in this clean condition until final acceptance. Bearings must be properly lubricated with oil or grease as recommended by the manufacturer. Belts must be tightened to proper tension. Control valves and other miscellaneous equipment requiring adjustment must be adjusted to setting indicated or directed. Fans must be adjusted to the speed indicated by the manufacturer to meet specified conditions.

3.7 CLOSEOUT ACTIVITIES

Provide closeout activities in addition to and in accordance with Section CLOSEOUT SUBMITTALS.

A. Extra Materials
Submit spare parts data for each different item of equipment specified, after approval of detail drawings and not later than 2 months prior to the date of beneficial occupancy. Include in the data a complete list of parts and supplies, with current unit prices and source of supply, a recommended spare parts list for 1

year of operation, and a list of the parts recommended by the manufacturer to be replaced on a routine basis.

B. Maintenance Service Providers
Submit a certified list of qualified permanent service organizations, which includes their addresses and qualifications, for support of the equipment. The service organizations must be reasonably convenient to the equipment installation and be able to render satisfactory service to the equipment on a regular and emergency basis during the warranty period of the contract.

C. Warranty
Provide the following:
1. Condensed operating instructions listing step-by-step procedures required for system startup, operation, abnormal shutdown, emergency shutdown, and normal shutdown.
2. Manufacturer's Engineering Data.
3. Manufacturer's Instructions.
4. Shop Drawings.

D. Posted Instructions
Submit the field posted instructions, at least 2 weeks prior to construction completion. Including equipment layout, wiring and control diagrams, piping, valves and control sequences, and typed condensed operation instructions on one sheet of paper. The condensed operation instructions must include preventative maintenance procedures, methods of checking the system for normal and safe operation, and procedures for safely starting and stopping the system. The posted instructions must cover all of the items contained in the approved operation and maintenance manuals as well as demonstrations of routine maintenance operations The posted instructions must be framed under glass or laminated plastic and be posted where indicated by the Contracting Officer.

E. Training
Provide training, for all items provided under this section. Also include refrigeration leak detection and leak detection response training. The training period must consist of a total 24 hours of normal working time for items covered in this section.

END OF SECTION 23 81 00

SECTION 23 82 -00 – PIPING FOR HVAC

PART 1 – GENERAL

1.1 RELATED DOCUMENTS

A. All of the Project "General Documents" apply to work specified in this Section; consult them in detail for applicable instructions.

B. Manufacturers referenced in the technical specifications are for the purpose of establishing a standard of quality. Alternate manufacturers providing the same quality materials or equipment will be given consideration by the Architect and/or Engineer if they are notified in writing per General Conditions.

C. Section 23 00 00- Special Requirements for Mechanical and Electrical Work shall apply.

D. Section 23 00 50 - Vibration Isolation and Seismic Restraints for HVAC, Fire Protection, Electrical and Plumbing.

1.2 DESCRIPTION OF WORK

A. The Work includes providing of all labor, materials, equipment, accessories, services and tests necessary to complete and make ready for operation by the Owner, all piping as shown on the Drawings and hereinafter specified.

1.3 QUALITY ASSURANCE

A. "Manufacturers" - Firms regularly engaged in manufacture of pipe whose products have been in satisfactory use in similar service for not less than ten (10) years.

B. Provide product produced by the manufacturers, which are listed in Section 15600 under "List of Approved HVAC Manufacturers."

C. Provide pipe whose performance, under specified conditions, is certified by the manufacturer.

1.4 SUBMITTALS

A. Refer to Section 15000, "Special Requirements for Mechanical and Electrical Work," and submit shop drawings.

1.5 COORDINATION

A. Refer to Section 15000, "Special Requirements for Mechanical and Electrical Work".

PART 2 – PRODUCTS

2.1 PIPE

A. All pipe shall be new, free from scale or rust, of the material and weight specified under

the various services. Each length of pipe shall be properly marked at the mill for proper identification with name or symbol of manufacturer.

B. All steel piping, except where otherwise rated, shall be standard or extra strong weight, in conformance with the ASTM A-53 Grade A seamless, for piping 2" and larger, as manufactured by National Tube Division, Republic Steel Corp., or approved equal. Piping shall be ASTM A-53 continuous butt weld, for piping less than 2".

C. All copper tubing shall be of weight as required for service specified, with conformance with ASTM B-88 for Types "L" and "K" tubing, as manufactured by Chase, Anaconda, Revere, or approved equal. Tubing and fittings shall be thoroughly cleaned with sand cloth and treated with an approved non-corrosive flux before solder is applied.

D. All galvanized steel piping shall be standard or extra strong weight, as specified, in conformance with the ASTM A-53 Grade B. Pipe shall be hot-dripped zinc-coated with Prime Western smelter and not wiped.

E. Generally, unless otherwise specified, joints in steel piping of sizes 2 inches and under shall be screwed, and all sized 2-1/2 inches and over shall be welded or flanged. Copper tubing shall be silver-soldered or 95-5 solder as herein specified.

F. Screwed Piping

1. All connections to apparatus with screwed piping shall be made with 250 pound brass seat unions.

2. All screwed nipples shall be Schedule 80 nipples.

G. Welding Piping

1. All fittings for welded piping shall be as manufactured by Tube Turn, Grinnell, Bonney Forge or equal as approved by the Architect. The fittings shall be of the same weight and material as the piping to which they are attached.

2. For piping 2-1/2" and larger, full size branch connection shall be made with manufactured welding tees, branch connections for less than full size, shall be made with welding tees or with Weldolet forged branch outlet fittings. Fish mounting, shaped nipples and stubbing not permitted.

H. Welding outlet fittings shall be Weldolets as manufactured by Bonney Forge, Inc., or approved equal 2 or 3 and smaller branches shall be made with thredolets as made by Bonney Forge or approved equal.

I. Weld ells shall have a center line radius not less than diameter of the pipes.

J. All flanges shall be welding neck flanges ANSI B16.5 ASTM 181 Grade I.

All systems, except where otherwise noted - 150 lb. Class, forged steel.

K. Instrumentation connections 3/4" and smaller on all systems shall be provided by welding threaded 2000# forged steel half couplings to the pipe.

L. All pipe to be welded shall be cut off clean and beveled. All welding shot shall be removed.

M. Composition of welding electrodes shall be in accordance with manufacturer's recommendations.

N. Pipe welding shall comply with the provisions of the latest revision of the applicable code, whether ASME Boiler and Pressure Vessel Code, ANSI Code for Pressure Piping B31, or such state or local requirements as may supersede codes mentioned above.

O. Before any pipe welding is performed, submit a copy of the welding procedure specifications together with proof of its qualification as outlined and required by the most recent issue of the code having jurisdiction.

P. Before any operator shall perform any pipe welding, also submit the operator's qualification record in conformance with provisions of the code having jurisdiction, showing that the operator was tested and certified under the Procedure Specification as before mentioned.

Q. Assume responsibility for the quality of welding done and repair or replace any work not in accordance with these specifications.

R. In addition, all pipe welding procedures and procedures for qualification of pipe welding operators shall comply with the requirements of the American Welding Society.

S. Cut weld test plugs at locations selected at random by the Architect. The test plugs shall be tested by the testing agency approved for this project. Failure of the test plugs to meet the standards of the specified codes and agencies shall result in the complete removal and replacement of the joint and retesting of the operator who performed the welding. The removal and replacement of the joints shall be at no additional cost to the owner.

PIPE SCHEDULE: Pipe for the various services shall be as follows:

SERVICE	MATERIAL	SCHEDULE
Overflow and Drain	Copper	Type K
Cold Water Make up	Copper	Type K
Hot Water (Heating)*	Steel	40 or Standard
*Branch runouts to reheat coils, etc.	Copper	Type L
Refrigerant	ACR Tubing	
Vent (water discharge)	Copper Tubing 1/4' Steel	Type “L’ (soft) Gas

* Runouts to radiation, cabinet heaters, reheat coils, etc. only from a bronze valve off steel main or riser.

2.2 FITTINGS

A. Fittings shall be specified under "Fitting Schedule" for various services.

B. Welding fittings shall be of the same material and schedule as the pipe to which they are welded. Welding elbows shall be long radius pattern unless clearance conditions necessitate the use of standard radius pattern. Welding fittings shall be as made by Tube-Turn.

C. Fittings shall be of material conforming to the following schedule:

Steel Welding Fittings	ASTM A-106
Malleable Iron Fittings	ASTM A-197
Cast-Iron Fittings	ASTM A-126
Brass Fittings	ASTM B-62
Solder Fittings	ASTM B-88

D. All fittings used at expansion loops or bends shall be extra heavy.

E. Cast iron, malleable-iron and bronze fittings shall be of Crane manufacture or approved equal.

F. Flanges shall be raised face, of the same weight as the fittings in each service category. All flanges shall be drilled to "US Standard" hex nuts and washers. Bolting shall conform to ASTM 193 Grade B-7, threads Class 7 fit. Nuts shall be semi-finished hexagonal, ANSI B18.2 ASTM A194 Grade 2H.

G. Unions - Unions 2 inches (2") and smaller shall be screwed. Unions 2-1/2 inches and larger shall be flanged. Screwed unions on steel pipe, unless otherwise specified, shall be of malleable iron with bronze ground seats suitable for 30 pounds W.S.P. Screwed unions on copper or brass pipe shall be brass, ground joint suitable for 300 pounds W.S.P. Flanged unions shall be malleable iron for steel pipe and brass for copper or brass pipe, gasket type suitable for 150 pounds W.S.P. Unions shall be as manufactured by Crane or approved equal.

H. Solder for each solder-type fitting shall be of 95% tin and 5% antimony or silver solder, as specified herein. Refrigerant piping joints shall be made with silver solder.

I. Unless otherwise specified, all flanged joints shall be fitted with Manville or equal ring gaskets designed for the intended service.

Fitting Schedule: Fitting for the various services shall be as follows:

Service	Size	Material	Weight Type
Overflow and Drain	ALL	Wrought Copper	125# Solid
Cold Water Make-up	All	Wrought Copper	125# Solid
Hot Water (heating)	2" & below	C.I.	125# Screwed
	2-1/2" & above	Steel	Sch. 40 Welding
Refrigerant	ALL	Wrought Copper	300# Brazed
Vent (water	ALL	Wrought Copper	125#

* Where copper is permitted under "pipe schedule", use 125# solder wrought copper fittings. See "HVAC Specialties" section for use of mechanical couplings.

2.3 PIPE HANGERS AND SUPPORTS

Provide necessary structural members, hangers and supports of approved design to keep piping in proper alignment and prevent transmission of injurious thrusts and vibrations. In all cases where hangers, brackets, etc., are supported from metal decking and/or concrete construction, care shall be taken not to weaken decking and/or concrete or penetrate water-proofing. All hangers and supports shall be capable of screw adjustment after piping is erected. Hangers supporting piping expanding into loops, bends and off-sets shall be secured to the building structure in such a manner that horizontal adjustment perpendicular to the run of piping supported may be made to accommodate displacement due to expansion. All such hangers shall be finally adjusted, both in the vertical and horizontal direction, when the supported piping is hot or chilled, as required. Hangers in contact with copper or brass pipe shall be copper plated steel.

A. Pipe hangers shall be the clevis and pipe roll types, except where otherwise noted.

PIPE HANGER SCHEDULE - MAKE AND MODEL

	Type of Hanger	Grinnell Fig. No.	F&M Fig. No.	Carpenter & Paterson Fig. No.
Pipe 2" & smaller (steel)	Clevis Hanger	260	239	100

2" & smaller (copper)	Adjustable Wrought Iron	CT-65	364	100 CT
2-1/2" to 4" (steel)	Adjustable Swivel Pipe Roll	174	2729	16
2-1/2" to 4" (copper)	Adjustable Wrought Ring	CT-269		
5" & above	Two Rod Roller Hanger	171	170	142

B. Beam clamps - Hangers supported from floor steel shall be approved I beam clamps. I beam clamps for hangers supporting piping 2 inches and smaller shall be C & P Fig. No. 148 adjustable beam clamps. For piping 2_1/2 inches and larger, I beam clamps shall be wrought steel. C & P Fig. No. 268 or equal.

C. Where piping is run near the floor and not hung from the ceiling construction but is supported from the floor, such supports shall be of pipe standards with base flange and adjustable top yoke similar to C & P Fig. 247 or equal.

D. All vertical piping shall be anchored by means of heavy steel clamps securely bolted or welded to the piping and with end extension bearing on the building.

E. All vertical piping shall be guided at each floor by use of clamps fastened to building structure. Provide 360 degrees protective saddle at guides. Saddles shall be fastened to pipe or insulation.

F. Vertical runs of pipe not over 15 feet long shall be supported by hangers placed not over one foot from the elbows on the connecting horizontal runs.

G. Vertical runs of pipe over 15 feet long but not over 60 feet long and not over 6 inches in size, or not over 30 feet long and not over 12 inches in size, shall be sup-ported on heavy steel clamps. Clamps shall be bolted tightly around the pipes and shall reset securely on the building structure without blocking. Clamps shall be welded to the pipes or placed below couplings. Clamps shall be type 8, Federal Specification WW-H-171C, unless other types are approved.

H. For all insulated, condenser, chilled water and makeup water and insulated refrigerant piping, provide "Insul-shield" as made by Insulcoustic Corp. or pipe covering protection shield C & P Fig. 265P with steel shield min. 9 inches long, with vapor barrier jacket. For steam, condensate and hot-water heating piping 2 inches and smaller, same as above. For steam, condensate and hot-water heating piping 2-1/2 inches and larger, provide steel pipe covering protection saddles C & P Fig. 353 series.

I. Piping in trenches shall reset or hang from angle iron cross supports provided by the Contractor with two coatings of red lead primer and final coat of black asphaltum paint.

J. Hanger rods shall be of the following diameters:

Pipe Size	Rod Diameter	Max. Spacing
1-1/4 inch & below	3/8 inch	6'-0"
1-1/2 and 2 inch	3/8 inch	10'-0" (copper 8'-0")
2-1/2 and 3 inch	1/2 inch	10'-0" (copper 8'-0")
4 inch and 5 inch	5/8 inch	12'-0"
6 inch	3/4 inch	14'-0"
8 inch & above	7/8 inch	16'-0"

K. Hanger rods shall be attached to preset concrete inserts with steel reinforcing rod through the insert and both ends hooked over the reinforcing mesh. For pipes 4 inches and larger, rods shall extend through concrete slab above where they shall be attached to steel bearing plates 6" x 6" x 1/4".

L. Piping shall not be hung from other piping ducts, conduits or from equipment of other trades and no vertical expansion shields will be permitted. Hanger rods shall not pierce ducts.

M. All water piping within all mechanical spaces shall be isolated from the building structure as described in Section 15005.

N. Where additional steel is required for the support of hangers, furnish and install same subject to the approval of the Architect. Piping and ductwork shall not be supported from concrete slab construction at ceiling.

O. All piping running on walls shall be supported by means of hanger suspended from heavy angle iron wall brackets. No wall hooks will be permitted.

P. Lateral bracing of horizontal pipe shall be provided where required to prevent side sway or vibration. The lateral bracing shall be of a type approved by the Engineer and shall be installed where directed by the Engineer.

2.4 ANCHORS

A. All anchors shall be separate and independent of all hangers, guides, and supports. Anchors shall be of heavy blacksmith construction suitable in every way for the work approved by the Architect. Anchors shall be welded to the pipe and fastened to the structure with bolts.

B. Anchors shall be fabricated and assembled in such a form as to secure the piping in a fixed position. They shall permit the line to take up its expansion and contraction freely

in opposite directions away from the anchored points; and shall be so arranged as to be structurally suitable for particular location and line loading. Submit details for approval.

C. All heavy piping, such as:

Individual pipes having a nom. dia. greater than 12 inches. Groups of pipes consisting of more than three 8 inch, or more than two 10 inch nom. 1 dia. pipes.
Any combination of closely spaced pipes weighing more than the equivalent of above or 15 lb. per linear ft. shall be supported at all points with overhead floor beams by fastening to the flange of such beams with steel clamps or other suitable means.

D. Where such heavy piping runs parallel with the floor beams properly designed auxiliary steel must be provided. The spacing of such auxiliary steel supports shall in no case be greater than the spacing of the floor beams running perpendicular to the corrugations of the permanent slab steel forms.

E. Assume the responsibility for the proper transfer of the loads of the piping systems to the structure. No additional cost to the owner should be expected for any corrective work during construction.

PART 3 - EXECUTION

3.1 INSPECTION

A. Contractor shall examine location where the piping is to be installed and determine space conditions and notify Architect in writing of conditions detrimental to proper and timely completion of the work. Do not proceed with the work until unsatisfactory conditions have been corrected.

3.2 INSTALLATION

A. Coordinate with other work as necessary to interface installation of piping with other components of systems.

B. Provide and erect in a workmanlike manner, according to the best practices of the trade, all piping shown on the Drawings or required to complete the installation intended by these Specifications.

C. The Drawings indicate schematically the size and location of piping. Piping shall be set up and down and offset to meet field conditions and to provide adequate maintenance room and headroom in the Mechanical Rooms.

D. Study the General Construction Specifications and Plans, of the exact dimension of finished work and of the height of finished ceilings in all rooms where radiation, units, equipment or pipes are to be placed and arrange the work in accordance with the Schedule of Interior Finishes, as indicated on the Architectural Drawings.

E. All exposed piping shall be run perpendicular and/or parallel to floors, interior walls, etc. Piping and valves shall be grouped neatly and shall be run so as to avoid reducing headroom or passage clearance. Provide min. 7'_6" headroom under passageway in mechanical equipment room. All valves, controls and accessories concealed in furred spaces and requiring access for operation and

maintenance shall be arranged to assure the use of a minimum number of access doors.

F. All pipe lines made with screwed fittings must be provided with sufficient number of flanges or unions to make possible any taking down of the pipes without breakage of fittings.

G. All piping shall be erected so as to ensure a perfect and noiseless circulation throughout the system. No bull head tees will be permitted.

H. All valves and specialties shall be so placed as to permit easy operation and access.

I. Provide proper provision for expansion and contraction in all portions of pipe work, to prevent undue strains on piping or apparatus connected therewith. Provide double swings at riser transfers and other offsets wherever possible to take up expansion. Arrange riser branches to take up motion of riser.

J. Approved bolted, gasketed, flanges (screwed or welded) shall be installed at all apparatus and appurtenances, and wherever else required to permit easy connection and disconnection. Screwed unions shall be used on piping 2" or less.

K. All piping connections to coils and equipment shall be made with offsets provided with screwed or welded bolted flanges so arranged that the equipment can be serviced or removed without dismantling the piping.

L. If, after plant is in operation, any coils or other apparatus are stratified or air bound (by vacuum or pressure), they shall be re-piped with new approved and necessary fittings, air vents, or vacuum breakers at no extra cost.

If connections are concealed in furring, floors, or ceilings, bear all expenses of tearing up and refinishing construction and finish, leaving same in as good condition as before it was disturbed.

M. Fittings shall be of the eccentric reducing type, where changes of size occur in horizontal piping to provide for proper drainage or venting. Steel pipe bends shall be made of the very best grade open hearth, low carbon steel, leaving a smooth uniform exterior and interior surface. Pipe bends shall be made with seamless steel pipe, having a minimum radius of not less than five (5) pipe diameters.

N. Tubing shall be erected neatly in a workmanlike manner. Bends in soft copper tubing benders to prevent deformation of the tubing in the bends. Approved seat-to-pipe threaded adapters shall be provided for junctions with valves and other equipment having threaded connections.

O. Vertical sections of main risers shall be constructed of pipe lengths welded together. No couplings shall be used.

P. The ends of all pipe and nipples shall be thoroughly reamed to the full inside diameter of the pipe and all burrs formed in the cutting of the pipes shall be removed.

Q. Piping shall be installed in accordance with the latest edition of the ASME Code for Pressure Piping.

R. All piping shall be concealed above furred ceilings in rooms where such ceilings are provided (except where specifically indicated otherwise on the drawings, or in walls or partitions, except as otherwise indicated.

S. Dissimilar piping shall be connected with dielectric connector as made by Ebco Company or approved equal.

T. Piping at all equipment and control valves shall be supported to prevent strains or distortions in the connected equipment and control valves. Piping shall be supported to allow for removal of equipment, valves and accessories with a minimum of dismantling and without requiring additional supports after these items are removed.

U. Pipe nipples - Any piece of pipe 3" in length and less shall be considered a nipple. All nipples shall be extra heavy. Only shoulder nipples shall be used. No close nipples will be permitted.

V. Screw threads shall be cut clean and true; screw joints made tight without caulking. No caulking will be permitted. A non-hardening lubricant shall be used. No bushings shall be used. Reductions, otherwise causing objectionable water or air pockets, to be made with eccentric reducers or eccentric fittings.

W. Pitch water piping upward one inch per 100 feet in direction of flow to ensure adequate flow without air binding and to prevent noise and water hammer. Pitch drain piping 1/8 inch per foot in the direction of flow. Branch connections to mains are to be made in such a manner as to prevent air trapping and permit free passage of air. To meet job conditions, mains shall set up to maintain headroom, and clear other trades. Provide oversized float operated automatic air vent (with valve). Avoid 90 deg. lift set-ups in supply lines by using 45 degree ells. Where 90 deg. lifts exceed 12" install automatic air vent in supply lines. All lifts in return lines shall be installed with automatic air vents. Pipe outlet of all automatic air vents to an open sight drain if the vent is concealed, or to within two feet of the floor within machine rooms. All water piping shall pitch back to low points for drainage. Low points shall be provided with 3/4 inch hose cocks.

X. Provide drain valves at the heel of all interior main water risers. Provide drain valves at the heel of all perimeter water risers.

Y. Miscellaneous drains, vents, reliefs, and overflows from tanks, equipment, piping, relief valves, pumps, etc., shall be run to the nearest open sight drain or roof drain. Provide drain valves whenever required for complete drainage of piping, including the system side of all pumps.

Z. All drain piping from condensate drain pans shall be properly trapped in accordance with the static pressures involved. Condensate drain piping sizes shall be not less than 1-1/2".

3.3 FIELD QUALITY CONTROL

A. Upon completion of installation of piping (partial or complete) test piping to demonstrate compliance with requirements. Where possible, field correct malfunctioning piping, then retest to demonstrate compliance. Replace piping which cannot be satisfactorily corrected. Refer to Section 15900, “Testing and Balancing.”

END OF SECTION 23 82 00

SECTION 23 84 00

SHEET METAL DUCTWORK

PART 1 - GENERAL

1.1 RELATED DOCUMENTS

A. All of the Project "General Documents" apply to work specified in this Section; consult them in detail for applicable instructions

B. Section 23 00 00 - Special Requirements for Mechanical and Electrical Work shall apply.

C. Section 23 00 50 - Vibration Isolation and Seismic Restraints for HVAC, Fire Protection, Electrical and Plumbing.

1.2 DESCRIPTION OF WORK

A. The work includes the providing of all labor, materials, equipment, accessories, services and tests necessary to complete and make ready for operation by the Owner, all Sheet Metal Ductwork as shown on the drawings and hereinafter specified.

1.3 QUALITY ASSURANCE

A. Fabrication and installation shall be by a single firm specializing and experienced in metal ductwork for not less than 10 years.

B. Comply with SMACNA (American Metal and Air Conditioning Contractor's National Association) recommendations for fabrication, construction and details and installation procedures, except as otherwise indicated.

C. Comply with ASHRAE (American Society of Heating Refrigeration and Air Conditioning Engineers) recommendations, except as otherwise indicated.

D. Compliance to SMACNA and ASHRAE is a minimum requirement. In case of disagreement between sheet metal work described in this Section and SMACNA or ASHRAE, the specification shall govern.

1.4 SUBMITTALS

A. Refer to Section 15000, "Special Requirements for Mechanical and Electrical Work," and submit shop drawings.

1.5 COORDINATION

A. Refer to Section 15000, “Special Requirements for Mechanical and Electrical Work.”

1.6 GUARANTEE

A. Refer to Section 15000, “Special Requirements for Mechanical and Electrical Work.”

1.7 PRODUCT HANDLING

A. Protect shop fabricated ductwork, accessories and purchased products from damage during shipping, storage and handling. Protect ends of ductwork and prevent dirt and moisture from entering ducts and fittings.

B. Where possible, store ductwork inside and protect from weather. Where necessary to store outside, store above grade and enclosed with waterproof wrapping.

PART 2 - PRODUCTS

2.1 GENERAL REQUIREMENTS FOR DUCTWORK

A. While the Drawings shall be adhered to as closely as possible, the Architect's right is reserved to vary the run and size of ducts during the progress of the work if required to meet structural conditions.

B. Install all ductwork in strict adherence to the ceiling height schedule indicated on the Architect's Drawings. Consult with the Electric and Plumbing Contractors, and in conjunction with the above Contractors, establish the necessary space requirements for each trade.

C. The sheet metal ductwork shall, whether indicated or not, rise and/or drop and/or change in shape to clear any and all conduits, lighting fixtures, plumbing and heating mains to maintain the desired ceiling heights. And to provide adequate maintenance room and headroom in mechanical equipment rooms.

D. The ductwork shall be continuous, with airtight joints and seams presenting a smooth surface on the inside and neatly finished on the outside. Ducts shall be constructed with curves and bends so as to effect an easy flow of air. Unless otherwise shown on the Drawings, the inside radius of all curves and bends shall be not less than width of ducts in plane of bend.

E. All rectangular ductwork, unless otherwise noted, shall be built from galvanized sheet steel and thoroughly braced and stiffened.

F. All air ducts exposed to the weather and not insulated shall be constructed of aluminum and shall be properly braced and supported and secured to the building construction. All seams shall be sealed with 3M EC-800 sealer.

The construction of ductwork shall be same as conventional ductwork except where transverse reinforcing angles not required, provide 1" x 1" x 1/8" black iron bracing angles matched angles at joint and 1" x 1" x 1/8" black iron between joints 4'-0" from joints.

Provide 1/8" thick gasket (3M EC-1202 or equal) for all matched angles.

Edge of ducts shall be bent ½" over matched angles to obtain watertight seal.

Rivet angles to duct and seal with 3M EC-800 sealer.

Paint black iron angles after installation.

2.2 DRIP PANS

A. Provide copper pans and gutters under all equipment subject to leaks mounted above electrical equipment. Each copper pan shall be properly pitched and a drain outlet provided and piped to drain. See "Drip Pans" under Section Special Requirements for Mechanical and Electrical Work.

2.3 DRYER EXHAUST DUCTWORK

A. All dryer exhaust ductwork shall be aluminum. All joints shall be sealed tight with 3M EC-800.

2.4 INSTALLATION OF HVAC DEVICES

A. Installation of Smoke Detectors: Smoke detectors shall be furnished by the Electrical Subcontractor and shall be installed in ductwork under this Section. Provide access door to each smoke detector. Minimum duct depth for smoke detector installation is 8".

B. Installation of Dampers: Refer to Drawings and temperature control specification for automatic dampers and install them in ductwork.

C. Installation of variable air volume system control devices: Install in sheet metal ductwork all control devices furnished by the manufacturer of the variable air volume system controls. Provide an access door at each such location.

2.5 DUCT FABRICATION

A. Ducts shall be neatly finished on the outside with all sharp edges removed.

B. Inside surfaces shall be smooth with no projections into the air stream except where otherwise indicated.

C. Longitudinal joints shall be Pittsburgh lock at corners or Acme lock on flat surfaces double seams hammered tight and shall be located above the horizontal axis of the duct. A snap lock seam shall not be permitted as a substitute for the Pittsburgh lock at corners of ducts.

D. Transverse joints shall be made airtight with all laps in the directions of air flow.

E. All fasteners and attachments shall be made of the same material as the ducts.

F. Furnish test wells 12" on the center horizontally and vertically in the suction and discharge duct of each fan. Test wells shall consist of a 1" x 3/4", 125 lb., bronze, screwed hex bushing, secured to the duct with a bronze hex locknut on the inside of the duct. A 3/4" x 2" long standard weight bronze, screwed nipple and cap shall be fitted to the housing on the outside of the duct. Test wells shall be No. 699 as made by Ventlok or approved equal.

G. All radius elbows shall have a minimum centerline radius of 1-1/2 times the width of the duct.

H. All square elbows shall have factory designed and built turning vanes with hollow vanes having different inside and outside curvature, similar to Tuttle and Bailey, Inc., "Ducturns". Shop fabrication vanes will not be approved. Where turning vanes are in conflict with the access doors to fire dampers. They shall be made movable so that fire dampers, shall be accessible.

I. Dissimilar metals shall be connected with flanged joints made up with fibers or neoprene gaskets to prevent contact between dissimilar metals. Flanges shall be fastened with bolts protected by ferrules and washers made of the same materials as the gaskets. Where an aluminum duct is to be connected to a galvanized steel duct, the end of the galvanized steel duct shall be coated with heavy black asphaltum paint before connecting it to the aluminum duct.

J. Changes in shape and dimension shall conform to the following: Except where otherwise noted, for increases in cross-sectional area, the shape of the transformation shall not exceed 1" in 7". Except where otherwise noted, for reductions in area, the slope shall not be less than 1" in 7" preferred.

K. Wherever it may be necessary to make provisions for vertical hangers of the ceiling construction passing through ducts, provide streamlined shaped sleeves around such ceiling construction hangers as to fully protect the duct from being punched with holes for the passage of such hangers.

Any such streamlined sleeves shall be made air tight at top and bottom of ducts. In no case shall there be more than two rods in any 9 sq. ft. area. No rods shall pierce ducts smaller than 12" in horizontal area .

L. The construction for low pressure rectangular sheet metal ducts shall be made in accordance with recommendations of ASHRAE Guide, Latest Edition, or as per SMACNA Manual but not less than the following weights and construction:

LOW PRESSURE - RECTANGULAR DUCTWORK

Dimension Longest Side, Inches	Sheet Metal Gauge (All Four Sides) Steel Gauge	Aluminum Thickness In.	Copper Oz. Per Sq. Ft.	Traverse Reinforcing At Joints and and Between Joints
Up thru 12	26	0.020	16	1” pocket lock 24 gauge, Standing seam joint 24 Gauge, 1” standing S slip 24 gauge. Joint max. on 8 ft. centers.
13 thru 18	24	0.025	24	Same as for up thru 12.
19 thru 30	24	0.025	24	1” pocket lock 22 gauge. Joints max, on 8 ft. Centers with 1 x 1 x 1/8 in. angles 4 feet from joint.
31 thru 42	22	0.032	32	Same as for 19 thru 30.
43 thru 54	22	0.032	32	1” standing S slip 22 gauge with 1-1/2” x 1/8 in. angles, 1-1/2” standing seam, joint, 1-1/2” pocket lock 22 gauge. Joints on 8 ft. centers with 1-1/2 x 18 in. angles max. 4 feet from joint.
55 thru 60	20	0.040	36	Same as for 19 thru 30.
61 thru 84	20	0.040	36	1” standing S slip gauge with 1-1/2” x 1-1/2” x 1/8 in. angles, 1-1/2” standing seam, joint, with 1-1/2 x 1-1/2 x 1/8 in. angles. Joints on 8 ft. centers with 1-1/2 x 18 in. angles max. 2 feet from joint.
85 thru 96	18	0.050	48	Same as for 61 thru 84 except all angles shall be 1-1/2 x 1-1/2 x 3/16 in.
Over 96	18	0.050	48	Same as for 61 thru 84 except all angles shall be x 2 x ¼ inch.

Flat areas of duct over 18 in. wide shall be stiffened by cross breaking of beading.
All joints to have corner closures.
All joints shall be sealed with 3M EC_800 mastic.

M. The construction for low pressure round sheet metal ducts and fittings shall be as follows:

Duct Diameter Inches	Steel-Galv. Sheet Gage	Girth Reinforcing Minimum Reinforcing Angle Size and Maximum Longitudinal Spacing	Girth Joints (Continuously Welded or as Below)
Up thru 8	26	None required	Crimped and beaded joint
9 thru 13	26	None required	Crimped and beaded joint
14 thru 22	24	None required	Crimped and beaded joint
23 thru 36	22	None required	-----
37 thru 50	20	1-1/4 x 1-1/4 x 1/8 @ 72 inc.	----
51 thru 60	18	1-1/4 x 1-1/4 x 1/8 @ 72 inc.	----
61 thru 84	16	1-1/4 x 1-1/4 x 1/8 @ 48 inc.	----

NOTE: Flanged joints may be considered as girth reinforcing.

Ductwork up to 36 in. diameter shall be spiral lockseam construction and it shall be assembled with prefabricated fittings made up of 20 gauge galvanized iron.

All joints shall be sealed tight with EC-800. Joints shall, in addition, be fastened with selftapping screws.

This trade may elect the option of using standard prefabricated spiral construction conduit and prefabricated fittings as made by United McGill or approved equal. All joints shall be sealed with 3M Co.'s EC-800.

N. Ductwork for medium pressure systems shall conform to the following:

1. Medium pressure ductwork is defined as ductwork from the discharge of a variable volume rooftop air handling unit to the inlet of a VAV box.

2. Duct construction shall consist of gauges and reinforcing framing specified in latest ASHRAE Guide for medium pressure ductwork or as per SMACNA annual, but not less than the following weights and construction.

3. See Section 15900 for testing of medium pressure ductwork before insulating.

Construction for Rectangular Medium Pressure Duct

Dimension of Longest Side Inches	Galvanized Sheet Gauge (All 4 Sides)	Transverse Reinforcing Between Joints and at Joints
Up thru 12	24	Inside slip joint, double S slip, welded flange, standing seam, flanged joint, pocket lock, companion angle flanged joint with 1-1/4 x 1-1/4 x 1/8 angles. No tie rods required at joints. Joints max. on 8 ft. centers.
13 thru 18	24	Between Joints: 1 tie rod at 48 in. intervals on centerline of duct side or without tie rods with 1 x 1 x 16 gauge angle. Standing seam, flanged joint, pocket lock, companion angle flanged joint with 1-1/4 x 1-1/4 x 1/8 angles. Joints max. on 8 ft. centers.
19 thru 24	22	Between Joints: 1 tie rod @ 48 in. intervals on centerline of duct side or without tie rods with 1 x 1 x 1/8 angle @ 48 in. At Joints: Inside slip joint, double S slip and welded flange, each with 1 x 1 x 1/8 angle. Standing seam, flanged joint, pocket lock, companion angle flanged joint with 1-1/4 x 1-1/4 x 1/8 angle. Joint max. on 8 ft. centers.
25 thru 36	22	Between Joints: Without tie rods with 1 x 1 x 1/8 angle @ 32 in. or 1-1/4 x 1-1/4 x 1/8 angle @ 40 in. At Joints: Inside slip joint, double S slip, welded flange, each with 1-1/4 x 1/8 angles. Standing seam, flanged joint, pocket lock, companion angle flanged joint with 1-1/4 x 1-1/4 x 1/8 angles. Joint max. on 8 ft. centers.

Construction for Rectangular Medium Pressure Duct

Dimension of Longest Side Inches	Galvanized Sheet Gauge (All 4 Sides)	Transverse Reinforcing Between Joints and at Joints
37 thru 48	22	Between Joints: Without tie rods with 1-1/2 x 1-1/2 x 1/8 angle @ 30 in. At Joints: Inside slip joint, double S slip, welded flange, each with 1-1/2 x 1-1/2 x 1/8 angles. Reinforced standing seam, with 1-1/2 x 1-1/2 x 1/8 angles, companion angle flanged joint with 1-1/4 x 1-1/4 x 1/8 angles. Joint max. on 8 ft. centers.
49 thru 60	20	Between Joints: 1-1/2 x 1-1/2 x 1/8 angle @ 24 in. with tie rod in center or without tie rods with 2 x 2 x 1/8 angle @ 24 in. At Joints: Inside slip joint, double S slip, welded flange, each with 2 x 2 x 1/8 angles or 1-1/2 x 1-1/2 x 1/8 angles with tie rod in center. Reinforced standing

		seam with 2 x 2 x 1/8 angle, companion angle flanged joint with 1-1/2 x 1-1/2 x 1/8 angles. Joints max. on 8 ft. centers.
61 thru 72	20	Between Joints: 1-1/2 x 1-1/2 x 1/8 angle @ 24 in. with tie rod in center or without tie rods with 2-1/2 x 2-1/2 x 3-16 angle @ 24 in.
		At Joints: Inside slip joint, double S slip, welded flange, each with 2-1/2 x 2-1/2 x 3/16 angles or 1-1/2 x 1-1/2 x 1/8 with tie rod in center. Reinforced standing seam with 2-1/2 x 2-1/2 x 3/16 angles. Companion angle 2 x 2 x 3/16. Joints max. on 8 ft. centers.
73 thru 84	18	Same as for 61 thru 72.
85 thru 96	18	Between Joints: 1-1/2 x 1-1/2 x 1/8 angles @ 24 in. with tie rod in center.
		At Joints: Inside slip joint, double S slip, welded flange each with 1-1/2 x 1-1/2 x 1/8 angles with tie rod in center. Companion angle flanged joint with 2 x 2 x 3/16 angles or 1-1/4 x 1-1/4 x 1/8 angles with tie rod in center. Joints max. on 8 ft. centers.
97 and over	18	Between Joints: 2 x 2 x 1/8 angle @ 24 in. with tie rods @ 48 in. along angle.
		At Joints: Inside slip joint, double S slip, welded flange, each with 2 x 2 x 1/8 with tie rods @ 48 in. along angle. Joints max. on 4 ft. centers.

2. Transverse reinforcing must be applied on all four sides and tied together at each corner by riveting, bolting or welding, to prevent air leakage and shall be installed with 1/8" thick 3M gasket EC_1202. Gaskets shall have overlapped corners and cover entire frame. Connecting angles shall be bolted to each other with stove bolts, spaced not more than 6" apart. In addition, each such angle frame shall be itself welded at the corners for rigidity. The longitudinal spacing of the transverse reinforcing between joints may necessarily be less than the spacings recommended in the table in order to conform to the selected length module.

In addition to the above, all medium pressure ductwork at supply fans, for a minimum of 30 ft. - 0 in. from supply fan shall have bracing, on each of four sides, as follows:

Up to 60 inches On 2 ft. - 0 in. centers

Over 60 inches - On 2 ft. - 0 in. centers, plus a longitudinal angle on sides over 60 inches.

All bracing angles shall be 2" x 2" x 1/8" and shall be tack welded or spot welded to the ducts.

O. The construction of round medium pressure ducts shall be galvanized steel of gauges noted in the latest issue of ASHRAE Guide or as per SMACNA Manual but not less than the following weights and construction.

Construction for Round Medium Pressure Duct

Duct Diameter Inches	Steel Galv. Sheet Gauge Spiral Lock Seam Duct	Longitude Seam Duct	Girt Reinforcing Minimum Reinforcing Angle Size and Fittings	Maximum Welded Longitudinal Spacing	Girth Joints (Continuously Welded or as Below)	
Up thru 8	26	24	22	None required	2 in. long slip joint	
9 thru 22	24	22	20	None required	4 in. long slip joint	

23 thru 36	22	20	20	None required	4 in. long slip joint
37 thru 50	20	20	1	1-1/4 x 1-1/4 x 1/8 @ 72 in.	1-1/4 x 1-1/4 x 1/8 angle flanged joint

Construction for Round Medium Pressure Duct

Duct Diameter Inches	Steel-Galv. Sheet Gage	Girth Reinforcing Minimum Reinforcing Angle Size and Maximum Longitudinal Spacing		Girth Joints (Continuously Welded or as Below)	
51 thru 60	_	18	18	1-/4 x 1-1/4 x 1/8 @ 72 in.	1-1/4 x 1-1/4 x 1/8 angle flanged joint
61 thru 84	_	16	16	1-1/2 x 1-1/2 x 1/8 @ 48 in.	1-1/2 x 1-1/2 x 1/8 angle flanged joint

NOTE: Flanged joints may be considered as girth reinforcing.

Provide 3M Co.'s gasket EC-1202 gasket at flanged joints and all slip joints shall be sealed with 3M Co.'s EC-800. Joints shall be maximum on 8 feet center.

This trade may elect the option of using standard prefabricated spiral construction conduit and prefabricated fittings as made by United McGill or approved equal. All joint shall be sealed with 3M Co.'s EC-800.

2.6 FLEXIBLE RUN-OUTS

A. Flexible runouts to diffusers shall be permitted only to expeditiously locate diffusers in the ceiling grid not as a substitution for rigid duct; maximum length 6'-0". Flexible duct shall not be used in rigid hung ceilings.

Flexible metal duct shall be all-metal, bendable, self-supporting and mechanically interlocked to be totally leak proof under operating conditions without manufacturing use of adhesives.

Flexible ducts shall be type AL006 uninsulated or Type AL006-150 insulated as made by United Sheet metal or approved equal. The flexible run-outs shall take all bends without kinking. The run-outs shall be flame resistant, shall have a low friction loss, and shall have working pressure minimum of 10 inch W.G. Flexible run-outs shall be no longer than 4'-0" and shall comply with Local Union Requirements. Any additional lengths necessary to connect the flexible duct to the high or medium pressure ductwork shall be made with spiral lockseam sheet metal duct of the same size as the flexible ductwork.

Clevaform type S and Type SFV as made by Clevaflex is approved equal.

B. The flexible run-out duct shall meet all requirements of the National Fire Protection Association 90A - Latest Edition.

Flame spread not over 25, smoke developed not over 50.

C. Each flexible run-out duct shall be sealed to its male outlets on both ends with 3M EC-800 sealer, or sealing compound as recommended by the flexible air duct manufacturer. The flexible air duct shall be

sealed and covered to a minimum depth of 2 inches of its mating metal coupling, branch take-off lap or duct at each of its ends. A Wraplock Ideal No. 5900 Strap-Clamp shall be furnished and installed at each end of the flexible duct.

D. Complete installation shall be airtight.

2.7 BUILT-UP CASINGS AND PLENUMS

A. All air casings and plenums shall be constructed of No. 16 gauge galvanized iron braced and stiffened on outside by means of 2" x 2" x 1/4" galvanized steel angles, or with 16 gauge standing seam panels not to exceed 26" in width. Standing seams are to have additional right angle bend and shall be capped with No. 18 gauge galvanized "U" cap over entire length of seam. All joints shall be caulked to make them air-tight. The bottom of all air chambers at the floor shall be gasketed to prevent air leakage.

B. Casings shall be supported on floor curbs. The bottom of all air casings at the floor and at any other connection to masonry shall be riveted to 1-1/2" x 1-1/2" x 1/8" galvanized steel angles which have been secured to masonry with expansion shields and caulked tight with cement.

C. Provide angles above and below access doors and frames for access doors.

See "Access Doors in Sheet Metal Work" for construction of doors.

D. Provide holes on angles spaced at 15" maximum centers to allow fastening of insulation.

E. This Contractor shall be responsible for any additional bracing required for stiffness including roof deck of casings. The roof deck shall be braced and supported from the ceiling slab, if required for stiffness.

2.8 DAMPERS

A. At each main branch take-off and in such other locations where required to properly balance the low-pressure system, furnish and install volume dampers of the opposed blade, multi-louvered type, which shall be operated by indicating quadrants and set screws, for adjusting the system.

B. Volume dampers shall be constructed as follows: Damper blades shall not be wider than 12", shall be complete with heavy angle iron frames, connecting and operating links, brass trunnions, and bronze bearings. Dampers, unless otherwise
noted, shall be fabricated with not less than No. 16 gauge sheet steel. Blades shall overlap and shall be provided with continuous stops on all four sides of dampers to prevent leakage. Blades shall be galvanized. Blades of dampers shall be set into a flat steel frame with frame securely bolted to the duct. All dampers shall be fitted with a hexagonal brass spindle which shall extend through the exterior of duct and be fitted with an indicating self-locking regulator. Regulator shall be similar to Ventlok 641 or approved equal. All hardware shall be Ventlock or approved equal. For insulated ductwork provide No. 644 self-locking regulator as made by Ventlok or approved equal.

C. All automatic dampers shall be furnished as a part of the automatic temperature control system by the automatic temperature control manufacturer. Install dampers and provide safing in ductwork for automatic dampers smaller than duct size.

D. Movable splitter dampers shall be provided at each and every supply take off and wherever else indicated. Dampers shall be airfoil, double wall type. Splitter damper assembly shall be Ventlok 603 Ball Joint Bracket and 600 Blade Bracket or approved equal. All hardware shall be Ventlok or approved equal. Blades to be spot welded or pivoted to shafts. Elevated regulators shall be provided for insulated ductwork.

E. For stainless steel and aluminum ductwork provide dampers of same material as ductwork.

F. All dampers shall be made accessible from building construction. Access doors in building structure shall be furnished or provided as hereinbefore specified.

2.9 FIRE DAMPERS

A. Fire dampers and sleeve installation shall be in accordance with NFPA_90A recommendations and shall bear U.L. Label in compliance with U.L. 555.

B. Clearly indicate fire damper location on shop drawings. Provide access doors in the ducts and furnish access doors or panels at building construction at each damper of sufficient size and type to permit inspection and replacement of linkage. Assume responsibility to coordinate all locations of duct access doors with the General Contractor to conform with whatever architectural access openings may be necessary and furnish access doors or panels in building construction. Provide shop drawings indicating location of access panels or doors for Architect's approval.

C. It is the intention of these plans and specifications to be complete. However, it is the responsibility of this Section, as being completely cognizant of local regulations, to determine where fire dampers are required and to advise the Architect prior to construction as to any discrepancies or questions in the plans or specifications.

D. Fire dampers shall be enclosed in sleeve of fourteen gage metal set and grouted into fire partitions. Sleeve shall be secured at both sides of fire partitions with 1-1/2 x 1-1/2 x 1/4 ga. mounting angles secured to sleeves only. Provide duct breakaway connections, see detail on drawings.

E. It is the intention of these plans and specifications to be complete. However, it is the responsibility of this section as being completely cognizant of local regulations, to determine where fire dampers are required and to advise the Architect prior to construction as to any discrepancies or questions in the plans of specifications.

Furnish fire dampers if not already required by regulations as listed below:

At each penetration of shaft wall.

At each penetration of a required fireproof partition or fire wall.

At each penetration of rated floor/ceiling assembly.

F. Fire dampers shall be "Fire Seal" as made by Air Balance, Inc. or approved equal, U.L. labeled.

Used For	Fire Damper
Rectangular Square	Type B
Low Pressure Ductwork	Model 119BL
Low, Medium or High Pressure Round Duct	Type C Model 119-CL

2.10 ACCESS DOORS IN SHEET METAL WORK

A. Wherever necessary in ductwork, casings or sheet metal partitions, provide suitable access doors and frames to permit inspections, operation and maintenance of all valves, coils, humidifiers, controls, smoke dampers, smoke detectors, fire dampers, filters, bearings, traps, or other apparatus concealed behind the

sheet metal work. All such doors shall be of double construction of not less than No. 20 gauge sheet metal and shall have sponge rubber gaskets around their entire perimeter. Doors in insulated ducts of insulated casings shall have rigid fiberglass insulation between the metal panels.

B. All access doors in sheet metal ducts shall be hung on heavy flat hinges and shall be secured in the closed position by means of cast zinc clinching type latches. Where space conditions preclude hinges, use four heavy window type latches. Doors into ducts shall in general not be smaller than 18" x 18" except for access door to fire dampers which will depend on size of fire damper.

C. In no case shall access to any items of equipment requiring inspection, adjustment, or servicing the removal of nuts, bolts, screws, wing nuts, wedges, or any other screwed or loose device.

D. Each sheet metal chamber shall have access doors for access to all parts of the system. Doors shall be fitted with cast zinc door latches, two per door. Latches shall be operable from both sides of casing. Hinges shall be extra heavy, zinc plated hinges, minimum of to per door. The doors shall be felted or provided with rubber gaskets so as to make them air-tight. The doors shall be made with inner and outer shells 2 inches apart so that they may be properly insulated and properly operated. Doors shall be a minimum size of 20" x 48".

E. Hinges shall be Ventlok No. 150 or 260 with or without screw holes or approved equal. Latch or walk-in access doors shall be No. 260 as made by Ventlok Co. or approved equal. Latch for access door in ductwork shall be Ventlok No. 100 or approved equal.

2.11 FLEXIBLE CONNECTIONS

A. All fan and air supply unit connections, both at inlet and discharge shall be made with material as hereinafter specified, so as to prohibit the transfer from fans to ductwork connecting thereto.

B. The flexible connections shall be a minimum of 12" long including bands using extra wide fabric as specified and held in place with heavy metal bands, securely attached, to prevent any leakage at the connection points.

C. Flexible connections shall be fabricated from the following materials unless otherwise required by Local Authorities.

Low and Medium Pressure Systems - neoprene coated glass fabric - 30 ounce/sq. yd.

D. Flexible connections shall not be painted.

2.12 AIR INTAKE AND DISCHARGES

A. Air intake and discharge louvers and screens in the facade of the building shall be furnished and installed under another section of the specifications. This Contractor shall blank off all unused portions of louvers as described in Section 15850.

2.13 GRILLES, REGISTERS AND DIFFUSERS

A. Furnish and install where shown on the drawings all metal diffusers, grilles and registers of the sizes and capacities indicated.

B. Ceiling diffusers shall be selected to diffuse the air uniformly throughout the occupied space. The air shall be introduced at a temperature differential of 20 Degrees and shall be diffused at the five (5) foot level to a velocity of not greater than 50 FPM and a temperature differential of not greater than 2 Degrees F. compared with mean room temperature. The sound power level of air distribution equipment devices shall not exceed ratings as shown by specified/scheduled manufacturer.

C. Equipment manufacturer shall submit engineering data in a manner to facilitate convenient review of the following factors:

a) Aspiration ability, including temperature and velocity traverses, throw and drop of each unit, noise criteria ratings for each unit, sizes, free area and quality of construction.

D. All air distribution equipment shall be as manufactured by specified/scheduled manufacturer, or approved, as scheduled on plans.

E. All ceiling diffusers shall be furnished with a device or devices equalize the air flow and control the volume. In non-accessible ceilings (concrete, sheetrock, concealed spline etc), balancing shall be accomplished from via a cable operated damper as manufactured by Young Regulator Company, Model 270-896C, 7/8" cap, concealed adjustment head. Representative is Samuel Tepp Company, (732) 54807398.

F. Location of ceiling diffusers and registers shown on the drawings are approximate. Coordinate with the acoustic tile ceiling Sub-Contractor for exact locations of ceiling diffusers and registers. They shall be in accordance with approved ceiling layout shop drawings.

G. Return grilles shall match return registers with the damper omitted. The specified/scheduled manufacturer. Type RL-230 or approved equal.

H. All registers, grilles and diffusers shall be coated with baked aluminum enamel, baked flat white (W-1), or baked gloss white (W-4) as supplied by the specified/scheduled manufacturer. unless otherwise indicated. All supply registers and grilles shall have a 1/4" sponge rubber gasket around the grille frame.

I. Exceptions to foregoing types of grilles, registers and diffusers shall be as indicated on the plans.

J. Each air supply outlet shall have the required capacity and shall be guaranteed to give the required draft with draftless diffusion. Where manufacturer's recommendations require duct sizes differing from those on the drawings, the same shall be provided at no additional cost to the Owner.

K. All grilles, registers and diffusers must be tested under ADC standards and carry an ADC seal of approval.

L. All registers and grilles located at face of partitions or plaster line of ceilings or soffits, etc. shall have plaster frames, the specified/scheduled manufacturer or approved equal.

M. Relocations of ceiling diffusers or registers in order to match the ceiling tile layout shall be made at no additional cost to Owner.

2.14 SOUND REDUCTION

A. Furnish and install all soundproofing material specified, indicated or necessary to that all systems will comply with requirement of quiet operation. In general, noise level in any part of building (except in machinery rooms), due to air conditioning or ventilating equipment, ducts, and outlets, shall not exceed 40 decibels at 1200-2400 cycles per second, except as otherwise hereinafter specified.

B. Furnish and install sound-absorptive lining in ductwork for locations and lengths as indicated and/or hereinafter specified. All soundproofing material, installation and arrangement, shall be as approved. Where ducts are acoustically lined, insulation shall be omitted for extent of acoustic lining. Dimensions noted for lined ducts are inside clear dimensions. Duct sizes shall be increased for liner.

C. Sound Absorbent Duct Lining for Low Pressure Ductwork - Furnish and install as herein specified and/or shown on the drawings (except where otherwise noted) 1" thick, 1-1/ lb. density, fibrous glass duct lining meeting the requirements of NFPA 90A.

D. Liner shall be adhered to all interior sides of duct with minimum 100% coverage of fire-retardant adhesive similar to Benjamin Foster 4 and with weld pins and washers or equivalent mechanical fastening starting 3" from edges and sides, 12" on center all sides. Minimum one row per side for duct size of 12" or less. Mechanical fasteners shall be toward air stream. Before installing liner, seal all butting edges and final edges with heavy coat of adhesive to seal off air between lining and duct. All exposed edges of lining shall be installed with sheet metal nosing 1-1/2" wide, two gauges heavier than duct. Installation shall be suitable for duct velocities up to 3,000 fpm. Low pressure duct lining shall be provided where specified and/or where shown and noted on the drawings.

E. Duct sizes indicated on drawings are clear inside dimensions. Increase sheet metal sizes as required to install acoustic lining.

F. The following ductwork shall be acoustically lined whether or not shown on drawings.

1. All supply and return ductwork inside building from RTU'S 1 thru 7 not less than 25 ft. from supply duct entrance and return duct exit shall have 1" thick lining.

2. All exhaust ducts within 15 ft. of all toilet exhaust fans shall have 1" thick lining.

3. All supply ductwork within 15 ft. of the discharge side of the VAV terminal units shall have 1" thick lining.

4. Where shown on drawings.

G. Where acoustic lining is used external insulation required by Section 15850 may be eliminated for that portion of the ductwork.

2.15 ACOUSTICAL PERFORMANCE SPECIFICATIONS - GENERAL

A. It is the intent of this specification that noise levels due to air conditioning and/or ventilating equipment, ducts, grilles and registers, diffusers and air light fixtures, will permit attaining sound pressure levels in occupied spaces conforming to the following NC curves as explained in the ASHRAE Guide and Data Book.

Offices and Conference Rooms	NC-35
Lobbies and Corridors	NC-40
Meeting Rooms	NC-30

B. Grilles, Registers, Diffusers

1. The maximum permissible sound power levels of air terminal devices when installed and operating per plans and specifications shall be as follows:

Maximum PWL re 10-12 Watts

Octave Band	NC-30	NC-35	NC-40
1	62	64	66
2	52	56	60
3	44	49	54

Maximum PWL re 10-12 Watts

Octave Band	NC-30	NC-35	NC-40
4	41	46	51
5	38	43	48
6	37	42	47
7	36	41	46
8	37	42	47

C. Sound Power Levels shall be tested in accordance with ASHRAE Standard 36-72.

2.16 ACOUSTICAL PERFORMANCE WITHIN EQUIPMENT SPACES

A. Equipment room noise levels and noise transmission to adjacent buildings shall comply with all Federal, State and City Noise Ordinances.

B. Motor Acoustical Performance:

1. Motor drives for pumps and refrigerator machine when installed per plans and specifications shall operate with noise levels not to exceed 80 dba.

2. Noise levels shall be determined in accordance with IEEE Standard #85 test "procedure for Air-Borne Noise Measurements on Rotating Electric Equipment".

PART 3 - EXECUTION

3.1 INSPECTION

A. Contractor shall examine location where ductwork is to be installed and determine space conditions and notify Architect in writing of conditions detrimental to proper and timely completion of the work.

B. Do not proceed with the work until unsatisfactory conditions have been corrected.

3.2 INSTALLATION OF DUCTWORK

A. Install ductwork in accordance with recognized industry practices, to ensure that ductwork complies with requirements and serve intended purposes.

B. Coordinate with other work as necessary to interface installation or ductwork with other components of systems.

C. Duct sizes shown on the drawings at connection to fans or other equipment may vary in actual installation. Contractor shall provide transition pieces as required.

D. Ducts, casings and hangers shall be installed straight and level and shall be free of vibration and noise when fans are operating.

E. Ducts at ceilings shall be suspended from inserts in concrete slabs except where otherwise indicated. Inserts shall be Grinnel Fig. 279, 282, or 152 as required. Ducts at floors shall be supported by steel angles suitably anchored to floor construction. Each duct shall be independently supported and shall not be hung from or supported by another duct, pipe, conduit or equipment of any trade. Ductwork in existing building shall be supported from existing slab by "Phillips 3/4" expansion bolts with lead shields.

F. Supports shall be placed at each joint and change in direction up to a maximum spacing of 8 feet on centers. Prevent buckling of ductwork.

G. All fastenings to building structure shall be adequate to insure permanent stability of sheet metal work and shall be capable of resisting all applied forces.

H. Vertical ducts in shafts or passing through floors shall be supported by steel angles or channels, welded, riveted, screwed or bolted to ducts and fastened to building structural members at each floor level. Provide safing to close all floor openings around ductwork - pack annular space with rockwool and 18 gauge sheet metal safing. Floor openings in plenums shall have ½ inch diameter steel bars.

I. Rigid connections between ductwork and non-rotating equipment shall be 12 inch on centers and shall be made with flanged joints, sealed with fireproof material (Fiber or Neoprene gaskets).

J. It is the intent to obtain low pressure ductwork construction with minimum leakage in supply, return and exhaust systems. The construction noted in specifications can produce low or high leakage rates, depending upon the workmanship, particularly with regard to the connection at the top of the ducts. Guarantee that total outlet or inlet diffuser volume, measured by means of velometer, shall be at least 95% of actual fan supply (measured by means of a duct traverse taken with a Pitot tube and water manometer). Seal the ductwork at joints with suitable sealers 3M EC-800 and tape. Use of "HARDCAST" or any other material is subject to Architect's approval.

K. For leakage test of medium pressure ductwork, refer to Section 15900.

3.3 DUCT HANGERS

A. Low pressure ducts up to 24" on a side or up to 20" diameter shall be suspended with 22 gauge, galvanized strap hangers, 1" wide.

B. Low pressure ducts 25" to 36" on a side or 21" to 36" diameter shall be suspended with galvanized strap hangers 1" wide 20 gauge.

C. Strap hangers shall be bent 90 Degrees F., extended down sides of ducts and turned under bottom of ducts a minimum of 2". Strap hangers shall be fastened
at ceiling with nuts, bolts and lock washers and to sides and bottom of ducts with sheet metal screws.

D. All medium and high pressure ductwork and low pressure. Ducts 41" and larger on a side or diameter shall be suspended with either rod or angle type hangers. No screws shall penetrate medium and high pressure ductwork.

E. Rod type hangers shall be 3/8" diameter black steel rods threaded at both ends and bottom bracing angles on ducts, with nuts and lock washers.

F. Angle type hangers shall be extensions of side bracing angles on ducts, bent 90 Degrees F. at ceiling and fastened with nuts, bolts and lock washers.

G. Hangers for vertical ducts shall be as per SMACNA Duct Manual.

H. Stainless steel ductwork shall be supported with rod or angle type hangers, so that there will be no penetration of the stainless steel ducts.

I. See Section 15005 for seismic restraints.

3.4 CLEANING AND PROTECTION

A. Clean ductwork internally, unit by unit as it is installed of dust and debris. Clean external surfaces of foreign substances, which might cause corrosion, deterioration of metal or interfere with painting.

B. At end of ducts which are not connected to equipment or air distribution devices at the time of ductwork installation, provide temporary closure of polyethylene film or other covering.

C. After completion of ductwork installation clean ductwork as follows:
   1. Cover all supply registers and diffusers with oil cheese cloth.
   2. Use supply fan or install temporary fan to provide air to the system for four (4) hours.
   3. Remove oil cheese cloth.

END OF SECTION 23 84 00

SECTION 23 85 00 – INSULATION FOR HVAC WORK

PART 1 - GENERAL

1.1 RELATED DOCUMENTS

A. All of the Project "General Documents" apply to work specified in this Section; consult them in detail for applicable instructions.

B. Manufacturers referenced in the technical specifications are for the purpose of establishing a standard of quality. Alternate manufacturers providing the same quality materials or equipment will be given consideration by the Architect and/or Engineer if they are notified in writing per General Conditions Par. G5-K.6.

C. Section 23 00 00 - Special Requirements for Mechanical and Electrical Work shall apply.

D. Section 23 00 50 - Vibration Isolation and Seismic Restraints for HVAC, Fire Protection, Electrical and Plumbing.

1.2 DESCRIPTION OF WORK

A. The work includes furnishing and installing all labor, materials, equipment, accessories and services necessary to provide piping, ductwork and equipment insulation installation, which is complete in every respect and of the composition and quality as shown on the drawings and hereinafter specified.

1.3 PIPE INSULATION

A. The following pipes shall not be insulated. Insulate all other piping:

1. Automatic air vent drain pipes.

1.4 DUCTWORK INSULATION

A. Insulate all ductwork except the following portions of ductwork:

1. Ducts and casings internally insulated or provided with sound absorptive lining.
2. All exhaust ductwork.
3. Return air ductwork inside building.
4. Exposed supply air ducts in conditioned spaces if same supply air duct serves that area.

1.5 QUALITY ASSURANCE

A. "Installer": A firm with at least ten (10) years successful installation experience on projects with piping and ductwork insulation similar to that required for this project.

B. All insulation shall have composite (including insulation jacket or facing and adhesive) fire and smoke hazard ratings as tested by procedure ASTM E-84, NFPA 225 and UL 723 not exceeding:

1. Flame Spread 25

2. Smoke Developed 50

3. Fuel Contributed 50

C. Accessories such as adhesives, mastics, cements, tapes and cloths for fittings shall have component ratings as listed above. All products shall bear UL labels indicating the above are not exceeded.

D. Provide certifications or other data as necessary to show compliance with these Specifications and governing regulations. Include proof of compliance for test or products for fire rating, corrosiveness, and compressive strength.

E. Provide products produced by the manufacturers which are listed in Section "Approved Manufacturers List".

1.6 SUBMITTALS

A. Refer to Section, "Special Requirements for Mechanical and Electrical Work," and submit shop drawings.

1.7 PRODUCT DELIVERY, STORAGE AND HANDLING

A. Protect insulation against dirt, water, chemical and mechanical damage. Do not install damaged insulation; remove from project site.

B. Deliver insulation, coverings, cements, adhesives and coatings to the site in factory-fabricated containers with the manufacturer's stamp, or label, affixed showing fire hazard ratings of the products.

C. Store insulation in original wrappings and protect from weather and construction traffic.

PART 2 - PRODUCTS

2.1 COLD AND DUAL TEMPERATURE PIPING INSULATION

A. The following piping shall be covered with fiberglass insulation with vapor barrier of following thickness:

Service	Thickness
Chemical Treatment (Chilled Water)	1"
A/C Unit Condensate Drain Lines Within Building	1/2"
Refrigerant Suction (Vapor) and Liquid AP/ARMA Flex	1"

B. Insulation shall be glass fiber with a maximum K factor of 0.23 at 75 Degrees F. mean temperature with factory- applied all service vapor barrier jacket per cubic foot.

C. Insulation shall be heavy density fiberglass sectional pipe insulation as made by Owens-Corning Fiberglass Corp. or CSG's "Snap-On" or Manville "Flame-Safe" fiberglass insulation.

D. ASJ longitudinal lap and 4-inch-wide vapor barrier joint sealing strips shall be adhered with Benjamin Foster fire-resistant vapor barrier lab adhesive BF-85--75, or equal. Ends of pipe insulation shall be sealed off at all flanges, fittings, valves and at intervals of 21 feet on continuous runs of pipe, with Benjamin Foster fire-resistant vapor barrier coating BF-30-35 or equal.

E. All fittings, valves and flanges for pipe sizes smaller than 4" shall be insulated with molded fiberglass fittings of same thickness as the adjoining pipe insulation, secured with NO. 20 gauge galvanized annealed steel wire and coated with 1/4" thick finishing cement, J-M NO. 375. Zeston 25/50 PVC as made by Manville, is approved.

F. All fittings, valves and flanges for pipe sizes 4" and larger shall be insulated with fabricated mitered segments of pipe insulation of same thickness as the adjoining pipe insulation, secured with NO. 20 gauge galvanized annealed steel wire and coated with 1/4" thick finishing cement. "Smooth Coat" by Insulation Industries. Zeston 25/50 PVC fitting covers as made by Manville is approved.

G. All coated molded fittings and metered segments shall be vapor sealed with a layer of J-M Duramesh 207, or equal, open weave glass fabric embedded between two 1/16" thick coats of Benjamin Foster 30-35 and lap seal at least 1" for molded type and 2" for metered type on itself and adjoining insulation.

H. All fittings, valves and flanges exposed to view shall be additionally finished with J-M A-2070 fitting cloth or equal, smoothly adhered and coated with Benjamin Foster 30-36 and lap as described above.

I. Direct contact between pipe and hanger shall be avoided. Hanger shall pass outside of a metal saddle which shall cover a section of high-density insulation (such as calcium silicate) of sufficient length to support pipe without crushing insulation. Hangers shall not pierce insulation and all vapor barriers shall be unbroken and continuous.

J. At pipe supports insulation shield protection saddles and matching hanger shall be used.

K. All strainers for chilled water and insulated condenser water piping shall be insulated and boxed in with galvanized sheet metal cover and insulation shall be made removable.

2.2 HOT-PIPE INSULATION

A. The following piping shall be covered with fiberglass insulation:

Service	Thickness
Hot water supply and return Up to 1-1/4"	1-1/2"
1-1/2" and above	2"
Hot Water Chemical Treatment	1"

B. Insulation shall be glass fiber with a maximum K factor of 0.27 at 75 Degrees F. mean temperature. Density shall be not less than 3 lbs. per cubic foot. Insulation shall be suitable for 650 Degrees F. (2" minimum thickness above 450 Degrees F.)

C. Insulation shall be heavy density sectional pipe insulation as made by Owens-Corning Fiberglass Corp., or CSG's "Snap-On" or Manville "Flame-Safe" Fiberglass insulation.

D. Longitudinal jacket laps and butt strips shall be smoothly secured with Benjamin Foster 25-20 adhesive or equal.

E. All fittings, valves and flanges for pipe sizes smaller than 4" shall be insulated with molded fiberglass fittings of same thickness as the adjoining pipe insulation, secured with No. 20 gauge galvanized annealed steel wire and coated with 1/4" thick finishing cement, J-M No. 375, or equal. Zeston 25/50 PVC fittings was as made by Manville is approved.

F. All fittings, valves and flanges for pipe sizes 4" and larger shall be insulated with fabricated metered segments of pipe insulation of same thickness as the adjoining pipe insulation, secured with No. 20 gauge galvanized annealed steel wire and coated with 1/4" thick finishing cement. Smooth coat as made by Insulation Industries. Zeston 25/50 PVC is approved.

G. All fittings, valves and flanges exposed to view shall be additionally finished with J-M A-2070 insulating fitting cloth or equal smoothly adhered and coated with Benjamin Foster 30-36. Lap to be at least 1" on pipe insulation below 4" and 2" on sizes 4" and above.

H. Insulation shall be protected by saddles from hangers, guides and rollers.

I. Strainers on hot pipes shall not be insulated.

2.3 PVC INSULATED FITTING COVERS:

A. Where permitted by code, the Contractor shall have option to use Zeston 25/50 rated PVC covers as made by Manville or approved equal.

B. Hot Systems: Fittings shall be insulated by applying the proper factory precut Hi-Lo Temp insulation insert to the pipe fitting. The ends of the Hi-Lo Temp insulation insert shall be tucked snugly into the throat of the fitting and the edges adjacent to the pipe covering tufted and tucked in, fully insulating the pipe fitting. PVC fitting cover is then applied and shall be secured by tack fastening, banding or taping the ends to the adjacent pipe covering.

C. On fittings where the operating temperature exceeds 250 Degrees F., 2 or more layers of the Hi-Lo Temp insulation inserts shall be applied prior to the installation of the PVC fitting cover. The first layer shall be applied with a few wrappings of fiberglass yarn to eliminate voids or hot spots.

D. Cold Systems: Fittings shall be insulated by applying the proper factory precut Hi-Lo Temp insulation insert to the pipe fitting. The ends of the Hi-Lo Temp insulation insert shall be tucked snugly into the throat of the fitting and the edges adjacent to the pipe covering tufted and tucked in, fully insulating the pipe fitting.

E. A vapor barrier mastic compatible with the PVC shall be applied around the edges of the adjoining pipe insulation and on the fitting cover throat overlap beam. The PVC fitting cover is then applied and shall be secured with pressure sensitive pearl gray Z-Tape along the circumferential edges. The tape shall extend over the adjacent pipe insulation and have an overlap on itself at least 2" on the downward side.

F. Two (2) or more layers of the Hi-Lo Temp insulation inserts shall be applied with the first layer being secured with a few wrappings of fiberglass yarn.

G. Refrigerant systems and cold systems in severe ambient conditions: Fittings shall be insulated to a full thickness the same as the adjacent pipe insulation, with insulation which has been metered to conform to the PVC fitting cover. An intermediate vapor barrier compatible with the PVC shall be applied, completely sealing the insulation and on the fitting cover overlap seam. The PVC fitting cover is then applied and shall be secured with pressure sensitive pear gray Z-Tape along the throat seam and the circumferential edges overlapping itself 2" on the downward side.

H. Qualifications for Using Insulation: When the pipe insulation thickness is greater than 1-1/2" or the pipe temperature is greater than 250 Degrees F. or less than 45 Degrees F., additional insulation inserts should be used. Use one Hi-Lo Temp insert for each additional 1" of pipe insulation.

I. Fitting cover: The temperature of the PVC fitting cover must be kept below 150 Degrees F., by the use of proper thickness of insulation and by keeping the PVC cover away from contact with, or exposure to, sources of direct or radiant heat.

2.4 PIPING EXPOSED TO FREEZING

A. Insulation on any piping, fitting, flange and valve located in areas exposed to freezing (in unheated areas, and where noted on the Drawings so as to provide "Frost Insulation") shall, in addition to above covering, be increased by one inch with the same finish as specified for the particular service when not subject to freezing. Insulation shall always be a minimum of 2-1/2 inches in thickness.

B. Weatherproofing of Piping

1. Weatherproof all insulated outdoor piping.

2. Where weatherproofing is required, in addition to insulation and finishes specified for frostproof, cover with crimped aluminum sheet .016 inch thick with lock seams at longitudinal seams, and preformed straps at transverse joints. Joints and jacket shall provide complete weatherproof protection either by mechanical contact or by use of a permanently plastic weatherproof sealant.

2.5 FIRE STOPPING

A. Packing of openings, where ducts and pipes penetrate fire barriers, shall be done with Rockwool insulation as made by United States Gypsum Co. or 3M Fire Barrier 2001 Silicone RTV Foam.

B. Insulation shall comply with Fed. Spec. HH-1-558, Form A, Class 4, K=0.24, melting point 2000 degrees F.

2.6 DUCTWORK INSULATION

A. Insulation for Concealed Duct

1. Except where otherwise noted, all concealed rectangular and round ductwork shall be covered with flexible duct insulation with or without vapor barrier and of the thickness indicated below.

Service	Thickness	With
Supply Air Ducts	1-1/2"	Vapor Barrier
Sound Traps	1-1/2"	Vapor Barrier
Outside Air Ducts	1-1/2"	Vapor Barrier

2. Flexible duct insulation with vapor barrier shall be 1 lb. per cu. ft. density glass fiber with a maximum K factor of 0.29 at 75 deg. F. mean temperature, with reinforced foil-faced, flame resistant kraft vapor barrier.

3. Insulation with vapor barrier shall be duct wrap insulation FRK-25, type 100 as made by Owens-Corning or Manville Microlite with FRK vapor barrier facing or standard duct insulation as made by CGG with FRK facing.

4. Flexible duct insulation without vapor barrier shall be 1 lb. per cu. ft. density glass fiber with a maximum K factor of 0.29 at 75 deg. F. mean temperature and shall be Owens Corning Fiberglass Type 75P, Manville Microlite or approved equal.

5. Adhere insulation to duct with Foster fire resistant adhesive 30-20 or equal, applied in 4 inch wide transverse strips at 8 inch intervals. Insulation shall be butted with facing overlapping all joints at least 2 inches and sealed with Foster fire resistant adhesive 30-20 or equal. For insulation with vapor barrier use Foster fire resistant vapor barrier adhesive or approved equal and joints without tabs shall be firmly sealed with aluminum foil tape adhered with same adhesive. Secure insulation with 18-gauge corrosion resistant wire spaced not more than 18 inches on center.

6. Additionally, secure insulation to bottom of rectangular ducts over 24" wide with welded pins or stick clips on 18" centers.

B. Insulation for Exposed Rectangular Duct

1. Except where otherwise noted, all exposed rectangular ductwork shall be covered with rigid duct insulation with and of the thickness indicated below:

Service	Thickness	With
Air Supply and Return Ducts in Mechanical Equipment Rooms	1-1/2"	Vapor Barrier
Outside Air ducts	1-1/2"	Vapor Barrier

Exhaust Air Ducts from Energy Recovery Unit	1-1/2"	Vapor Barrier
Sound Traps	1-1/2"	Vapor Barrier
Unused Portion of Louvers	2"	in 20-gauge sheet metal sandwich

1. Rigid duct insulation with vapor barrier shall be 6 lbs. per cu. ft. density glass fiber with maximum K factor of 0.22 at 75 deg. F. mean temperature with fire retardant vapor barrier facing all service jacket (white finish).

2. Rigid duct insulation with vapor barrier shall be Fiberglass Type 705 by Owens-Corning or Manville, No. 817 w/ASJ or approved equal.

3. Rigid duct insulation without vapor barrier shall be 6 lbs. per cu. ft. density glass fiber with maximum K factor of 0.22 at 75 deg. F. mean temperature. With fire retardant facing foil reinforced draft. (all service jacket).

4. Rigid duct insulation without vapor barrier shall be Fiberglass Type 705 by Owens-Corning, Manville, Manville, No. 817 w/ASJ or approved equal.

5. Insulation shall be fastened to duct with 12 gauge welded pins and washers, or equivalent as approved. Fasteners shall be spaced 12 to 18 inches on center, a minimum of two rows per side of duct. Secure insulation in place with washers firmly embedded in insulation, or push a self-locking cap over pin after coating with fitting mastic Type C by Owens-Corning or approved equal.

6. Seal all joints, breaks and impressions with Foster fire resistant vapor barrier adhesive Benjamin Foster 82-07, or equal and apply 5" wide joint sealing tape to all joints. All surface must be clean and dry before applying tape.

C. Insulation for Exposed Round Duct

1. Insulation for exposed round ductwork shall be of material as specified for concealed ductwork and shall be covered with glass cloth or all service jacket smoothly adhered with Benjamin Foster 85-20 adhesive. Seal joints with 5" wide tape.

Service	Thickness	With
Air Supply and Return Ducts in Mechanical Equipment Rooms	1-1/2"	Vapor Barrier
Supply Ducts except where otherwise noted	1"	Vapor Barrier

D. Weatherproofing Finishes for Outdoor Ductwork

1. Fiberglass enclosure panels - 6# density with FSK facing as by Manville or Owens Corning. The aluminum facing material shall be Childers, .016 smooth aluminum with baked enamel finish (color selected by Architect).

2.7 EQUIPMENT INSULATION

A. Heating in-line air separators, heat exchangers, shall be insulated with 2" thick calcium silicate, 85% magnesium or Kaylo blocks or N_1200 Block as made by Forty-Eight Insulations Inc., laid with staggered joints and secured in place with No. 16 gauge galvanized annealed steel wire for small areas and No. 12 gauge galvanized annealed steel wire or 1/2" x 0.015" galvanized steel bands on 12" maximum centers for large areas. Where required, welded studs, clips or angles shall be provided as anchors for wires and bands. On breechings one (1) inch air space by using hy-rib lath shall be first applied before applying insulation.

B. Over the insulation, 2" hexagonal mesh wire shall be tightly stretched in place and secured by wiring to anchors with edges tied together.

C. Finish shall be insulating and finishing cement J-M No. 301 or approved equal applied 1/2" thick in one coat, troweled to a smooth finish. Provide pre-sized glass cloth, smoothly adhered with B-F 85-20 adhesive over cement.

PART 3 - EXECUTION

3.1 INSPECTION

A. Contractor shall examine location where this insulation is to be installed and determine space conditions and notify Architect in writing of conditions detrimental to proper and timely completion of the work.

B. Do not proceed with the work until unsatisfactory conditions have been corrected.

3.2 INSTALLATION

A. Install insulation in accordance with manufacturer's written instructions, and with recognized industry practices, to ensure that insulation complies with requirements and serves intended purposes.

B. Coordinate with other work as necessary to interface installation of insulation with other components of systems.

C. All insulating materials shall be applied only by experienced workmen, in accordance with the best covering practice. All piping, duct or equipment shall be blown out, cleaned, tested and painted prior to the application of any covering. Adhesives, sealers and mastics shall not be applied, when the ambient temperature is below 40 deg. F., or surfaces are wet.

D. Insulation for factory-fabricated heat pumps and air handling units, furnished as part of units.

E. At all openings in insulation, insulate edges neatly and protect with sheet metal frames.

F. All items described in general indicate the type of covering required, however, all piping, ductwork or equipment that transmits heat or will form condensation shall be insulated.

3.3 FINISH FOR CONCEALED PIPE INSULATION

A. Hot Pipe: Factory ASJ (All service jacket) secured in place with Bostich staples 4" o.c. or ASJ/SSLII with self-sealing lap as made by Owens-Corning or approved equal.

B. Cold and Hot-Cold Pipe: Factory ASJ sealed with vapor barrier adhesive Marathone IC-225 or approved equal, secured in place with Bostich staples 4" o.c. Cover staples with vaporproof adhesive or cement.

3.4 FINISH FOR CONCEALED PIPE INSULATION

A. Exposed piping shall have finish same as concealed pipes unless otherwise noted.

B. All insulated piping exposed to weather shall have 0.016-inch-thick aluminum jacket banded with 1/2" aluminum bands spaced 18" o.c. or two bands per section.

END OF SECTION 23 85 00

SECTION 23 90 00

TESTING AND BALANCING

PART 1 - GENERAL

1.1 RELATED DOCUMENTS

A. All of the Project "General Documents" apply to work specified in this Section; consult them in detail for applicable instructions

B. Section 23 00 00 - Special Requirements for Mechanical and Electrical Work shall apply.

C. Section 23 00 50 - Vibration Isolation and Seismic Restraints for HVAC, Fire Protection, Electrical and Plumbing.

1.2 DESCRIPTION OF WORK

A. All piping equipment shall be tested. Labor including standby electrician, materials, instruments and power required for testing shall be furnished unless otherwise indicated under particular Section of the Specifications.

A. Tests shall be performed in the presents of and to the satisfaction of the Architect and such parties as may have legal jurisdiction.

B. In no case shall piping, equipment or accessories be subjected to pressure exceeding their ratings

C. All detective work shall be promptly repaired or replaced and the tests shall be repeated until the particular system and component parts thereof receive the approval of the Architects.

D. Any damage resulting from tests to any and all trades shall be repaired and damaged materials replaced, all to the satisfaction of the Architect.

E. The duration of tests shall be determined by all authorities having jurisdiction, but in no case less than the time prescribed below.

G. Equipment and systems which normally operate during certain seasons of the year shall be tested during the appropriate season. Tests shall be performed on individual equipment, systems, and their controls. Whenever the equipment or system under test is interrelated and depends upon the operation of other equipment, systems and controls for proper operation, functioning and performance, the latter shall be operated simultaneously with the equipment or system being tested.

H. All fans and duct systems shall be completely balanced by the adjustment of sheaves, dampers, registers and other volume and diverting control devices, to obtain the air quantities indicated on the design drawings. Replace sheaves if required to meet design conditions.

I. All pumps and piping systems shall be completely balanced by the adjustment of plug cocks, glove valves or other control devices, to obtain flow quantities indicated on the design drawings.

1.3 QUALITY ASSURANCE

A. Prior to installation of the mechanical systems, engage the services of an independent air and water balancing firm that shall be subject to the approval of the Architect. The firm shall have no affiliation with

a mechanical contracting or sheetmetal company. Balancing and testing company shall be a member of the Associated Air Balance Council. The balancing firm shall have at least one (1) member of its full time staff who is a licensed professional engineer who shall supervise the balancing work. Prior to balancing, a list of instruments to be used shall be submitted to the Architect. All instruments shall be calibrated within six (6) months before tests.

1.4 SUBMITTALS

A. Refer to Section "Special Requirements for Mechanical and Electrical Work." Submit all test and balancing reports as described hereinafter.

PART 2 - PRODUCTS

2.1 FIELD TEST OF PIPING

A. During construction, properly cap or plug all lines to prevent the entrance of sand, dirt, etc. The system of piping shall be blown through wherever necessary after completion (for the purpose of removing grit, dirt, sand, etc., from all equipment and piping), for as long a time as is required to thoroughly clean the apparatus.

B. Use anti-freeze solution for piping to be tested in winter.

C. All piping shall be tested as hereinafter specified. Tests shall be made after erection and before covering is applied or piping painted or concealed and as sections of mains and groups of risers are completed. The extent of the work completed before pressure tests are made shall be determined by the Architect.

D. All piping, unless otherwise specified, shall be tested to a hydrostatic pressure at least 1-1/2 times the maximum design working pressure (but not less than 50 lbs. per square foot) for a sufficiently long term to detect all leak and defects; and after testing shall be made tight in the most approved manner. Tests shall be repeated once after leaks and defects have been repaired.

When automatic control valves and similar devices are incapable of withstanding test pressures applied to piping, such devices shall be removed, or otherwise protected during tests. After approval of such tests, devices shall be installed and tested with operating medium to operating pressures. The following shall be tested for four consecutive hours and proved tight. Leaks shall be remedied by replacing defective work.

Item	Hydrostatic Field Test
Overflow and drain	50psi
Cold Water (domestic)	100psi
Hot Water, Chilled Water, Condenser Water	
Chemical Treatment	150psi
Vent – Water Discharge	100psi

E. Leaks appearing during the various pressure tests shall be corrected by replacing all defective materials or welds and subsequent tests shall be made until the piping is found perfect. Caulking of screwed joints or pending of welds is prohibited. Wherever it is necessary to cut out a weld and the ends of the pipe cannot be conveniently brought together, then a short piece of pipe shall be fitted in and welded as approved by the Architect.

F. Provide all other tests required by the Building Department, Fire Department and all other authorities having jurisdiction.

2.2 RUNNING TEST OF PIPING SYSTEMS

A. When directed, any section of the work, after it has been completed and otherwise satisfactorily tested, shall be put in actual operation and operated for a period of two (2) days of 24 hours each, during which time any defects which
may appear shall be remedied and any adjustment which may be necessary shall be made.

B. During the time of the tests, re-pack all valves, make all adjustments and otherwise put the apparatus in perfect condition for operation and instruct the Owner's representative in the use and management of the apparatus.

2.3 EQUIPMENT TEST

A. Demonstrate that all equipment and apparatus fulfill the requirements of the Specifications and that all equipment shall be operated and tested for rated capacities and specified characteristics. Voltage and amperage readings shall be taken on all electric motors.

2.4 AIR LEAKAGE TEST FOR MEDIUM PRESSURE DUCTWORK

A. The testing of all joints for air leakage after erection and the repair of any leaks are positive requirements. Leakage must be kept to a specified minimum. The test for air leakage is divided into two phases; namely, testing of individual vertical risers and testing of all branches. Provide all required instruments.

B. Test shall be made at 6 inches water gauge static pressure. All risers, branches and runouts shall be tested after installation before insulation is applied and before the air mixing units are installed. The total allowable leakage for the entire system shall be no more than three percent (3%) of the total system capacity.

C. Equipment necessary for performing this test shall include a rotary hand blower calibrated orifice section and a "U" tube gauge board complete with cocks and rubber tubing. The test hookup, as well as details for the fabrication of the orifice section shall be in accordance with the recommendation of the "high Velocity Duct Manual" of Sheet Metal and Air Conditioning Contractors National Association, Inc.

2.5 TEST PREPARATION AND PROCEDURE

A. On initial startup, prior to any tests, check the rotation and running amperage of all fan and pump motors to prevent damage to equipment by overload.

B. Final balancing must be done with all systems completely installed and operating, and after the automatic temperature controls have had their final adjustment.

C. New, clean filters must be installed in all supply systems prior to balancing.

D. All water systems shall be completely filled and vented and all strainers cleaned prior to balancing. Inspect expansion tanks for proper water level and operating of makeup water valves.

E. All main supply air ducts shall be traversed, using a pitot tube and manometer. The manometer shall be calibrated to read two significant figures in all velocity pressure ranges.

F. A main duct is defined as either of the following:

1. A duct serving five or more outlets.

2. A duct serving two or more branch ducts.

3. A duct serving a reheat coil.

4. A zone duct from a multi-zone unit.

5. A duct emanating from a fan discharge or plenum and terminating at one or more outlets.

The intent of this operation is to measure by traverse the total air quantity supplied by the fan and to verify the distribution of air to zones.

F. Submit data in support of all supply fan deliveries by the following four methods:

1. By summation of the air quantity readings at all outlets.

2. By duct traverse of main supply ducts.

3. By a rotating vane traverse across a filter or coil bank.

4. By plotting RPM and static pressure readings on the fan curve. Air density corrections must be indicated.

G. For return air and exhaust fans, summation and duct traversing shall be sufficient.

H. Inspect all fan scrolls and remove objects or debris. Inspect all coils and remove debris or obstructions. Verify that all fire dampers are open.

I. The supply air systems shall be completely balanced prior to the final balancing of the water systems.

J. Upon completion of all air and water balancing, all duct dampers, plug valves and other throttling devices shall be marked in the final adjusted position.

2.6 AIR BALANCE

A. Record the following design requirements for all fans and fan motors from the approved shop drawings.

1. Air quantities - CPM

2. Approximate fan speed - RPM

3. Fan static pressure (total or external) - inches of water.

4. Maximum tip speed - FPM

5. Outlet velocity – FPM

6. Fan brake horsepower

7. Motor horsepower

8. Volts, phases, cycles and amps at design conditions.

B. Record the following data from all fans and fan motors installed at the project:

1. Manufacturer, model and size

2. Motor horsepower, service factor and RPM

3. Volts, phases, cycles and full load amps

4. Motor starter and heaters size

5. Equipment location

C. All fans and duct systems shall be completely balanced by the adjustment of sheaves, dampers, registers and other volume and diverting control devices, to obtain the air quantities indicated on the drawings. Outside air and return air modulating dampers shall be adjusted to admit the specified quantities of air under all cycles of operation. All final adjusted air quantities shall be within 10% of the design requirements. Replace sheaves if required to meet design conditions.

D. Record the following test data for all fans and motors installed at the Project at final balanced conditions:

1. Fan speed RPM.

2. Fan static pressure (external and total) inches of water.

3. Static pressure drop across all filters, dampers, coils and other items in the supply fan casings.

4. Motor operating amps.

5. Actual voltage.

6. Fan CFM.

7. Calculated brake horsepower.

E. Submit single line diagrams of all duct systems indicating all terminal outlets identified by number. Data sheets shall list all such outlets denoted by the same numbers, including the outlet's size, "K" factor, location, CFM and jet velocity.
Submit this data for all supply, return and exhaust air systems.

F. Adjust the outside air and return air dampers to admit the required amounts of air under both summer and winter cycles. Record and submit the outside, return and mixed air temperatures for both cycles after final adjustments.

2.7 VARIABLE AIR VOLUME SYSTEMS

A. Check and record the following items on the supply and return fans:

1. Correct fan rotation.

2. Filter condition (clean or dirty).

3. Cooling coil condition (dry or wet).

B. Set the controls for the supply and return fans to operate at maximum capacity and for all variable volume dampers to be at the full open position.

C. Set the system up to operate with maximum return air and minimum outside air.

D. The following preliminary data should be obtained and recorded at the supply and return fans:

1. Fan and motor RPM.

2. Motor and current voltage.

3. Fan, coils and filter statics.

4. Nameplate data on the fans and motors.

5. Motor sheave, fan pulley and belt sizes.

E. Traverse the main supply ducts and return ducts to determine CFM deliveries of the fans.

F. Set the system to operate at 100% outside air and check the motor amperage. The motor amperage should remain relatively constant indicating no change in total air flow. If a change in flow does occur, adjust outside air, return air, and relief air dampers accordingly. Set enough variable volume controllers throughout the building to maximum in order to simulate a maximum load on the fan.

G. Measure the system duct static pressure at selected points throughout the system. Monitoring points shall be in those duct runs which are of the longest equivalent length (greatest friction loss). Monitor these points during the adjusting and balancing procedures to assure proper inlet static pressure is being maintained to the variable volume units.

H. Adjust the return fan to approximately 5% above design CFM and the supply fan to either 5% above design or to the point where the static pressure at the end of each branch is at required static pressure, whichever condition is reached first.

1. If the fan is adjusted to obtain the minimum static pressure, then it may be necessary to readjust the fan during the balancing as the static pressure will decrease as the constant volume controller deliveries are increased.

I. Make preliminary outlet readings and balance the outlets to design CFM and record all readings.

J. Individually set the controls for each variable volume damper to full heat the outlets.

K. Adjust the damper minimum position so the outlet total CFM is at the design minimum delivery. At the minimum delivery rate, the balance between the outlets may not hold, but no outlet adjustments should be made.

L. Check the variable volume controller for design delivery.

1. Check all the units, but make no adjustments. Report the results.

2. If check passes, then proceed with balancing.

3. Do all setting and adjusting required.

4. When necessary corrections have been made, a verification test will be required.

M. Adjust the outlets for design delivery.

N. The following final data should be obtained and recorded at the supply and return fans:

1. Fan and motor RPM.

2. Motor current and voltage.

3. Fans, coils and filter statics.

4. Approximate motor sheave setting.

O. Check the following controls:

1. High temperature limit shutoff function and calibration, if any.

2. Low temperature limit shutoff function and calibration, if any.

P. Set all controls to their normal set points and allow all controllers to reach a satisfied state.

Q. Measure the mixed air plenum static pressure to verify that the return fan capacity controller is functioning properly. The static pressure in the plenum should be within .05" W.C. of the final balance condition.

R. Walk through the building and listen for noise generated by the air distribution system. Excessive noise should be reported.

S. All above recorded items and readings shall be submitted to the Architect.

T. Adjust and test all terminal boxes, and their controls to deliver the required air quantities. Record the following data in addition to the design requirements for each unit:

1. Box size and location.

2. Maximum CFM.

3. Minimum CFM.

4. Heating CFM.

2.8 WATER BALANCE

A. Record the following design requirements for all pumps and pump motors from the approved shop drawings:

1. Water quantity - GPM

2. Total head - feet of water

3. Pump speed - RPM

4. Impeller size

5. NPSH (if required)

6. Motor horsepower

7. Volts, phases, cycles and amps at design conditions.

B. Record the following data from all pumps motors installed at the project:

1. Manufacturer, model and size.

2. Impeller size.

3. Motor horsepower, service factor and RPM.

4. Volts, phases, cycles and full load amps.

5. Motor starter and heaters size.

6. Equipment location.

C. All pumps and piping systems shall be completely balanced by the adjustment of plug cocks, globe valves or other control devices, to obtain the flow quantities indicated on the drawings. Balancing shall be done with all controls set for full flow through coils. All automatic throttling valves shall be in the full-open position. All automatic three-way valves shall have the bypass port closed.

D. Record the following test data for all pumps and pump motors installed at the Project:

1. Pump speed - RPM

2. Total head at shut-off or dead-end discharge - feet of water. (Plot this value on pump curve as a verification of impeller size.)

3. Suction, discharge and total head at final adjusted flow - feet of water.

E. Balance the water flow through all condensers, coils, convectors, cabinet heaters, heat exchangers, unit heaters, etc., in accordance with design requirements.

F. For all venturi type, pitot tube or other flow measuring devices record the pipe size, manufacturer and size of device and the direct reading or the differential pressure, and calculated final flow.

G. Flow shall be balanced through all equipment and coils by means of pressure drop. Obtain curves from the various manufacturers indicating the relationship between flow and pressure drop through the coils and equipment. Readings shall be taken on calibrated test gauges. Submit curves with the final report.

H. Upon completion of the water balance, reconcile the total heat transfer through all coils by recording the entering and leaving water temperatures and the entering and leaving air dry bulb and wet bulb temperatures.

I. Upon completion of balancing adjust all differential bypasses and three-way valve bypasses for the same pressure drop or full bypass as on full flow.

END OF SECTION 23 90 00

SECTION 23 95 00 - AUTOMATIC TEMPERATURE CONTROLS

PART 1 - GENERAL

1.1 SECTION INCLUDES

A. DESCRIPTION: Building Management System (BMS), utilizing Niagara 4 Direct Digital Controls (DDC) based control equipment for HVAC systems and components, including control components for units not supplied with factory provided controls.

1.2 RELATED WORK

A. GENERAL: The Drawings and the General Provisions of the Contract, including General, Supplementary, and Special Conditions, and Division 1 - General Requirements, apply to work specified in this section. The Building Management System contractor shall familiarize himself with the terms of the above documents and any sections hereinafter referred to that affect this work. If the Building Management System contractor believes there are conflicts or missing information in the project documents, the Building Management System contractor shall promptly request clarification and instruction from the A-E design team.

B. RELATED WORK, SPECIFIED ELSEWHERE

1. Project Drawings, Mechanical; BMS Diagrammatic Details.
2. Division 1 Section “General and Special Requirements”.
3. Division 23 Section “Common Work Results for HVAC”.
4. Division 23 Section “Testing, Adjusting and Balancing For HVAC”.
5. Division 26 Section “Requirements for Electrical Installations”.

C. PRODUCTS NOT SUPPLIED, BUT INSTALLED BY THIS SECTION:

1. Original Equipment Manufacturer (OEM) field mounted wall sensors.
2. Original Equipment Manufacturer (OEM) network communications wiring.

D. WORK REQUIRED UNDER OTHER DIVISIONS, RELATED TO THIS SECTION:

1. LAN (Ethernet) connections adjacent to SNC (JACE) network management controls.

1.3 SYSTEM DESCRIPTION

A. OVERVIEW: The Building Management System (BMS) shall provide the Direct Digital Control (DDC), for the heating and cooling air conditioning systems and shall interface with other

building microprocessor-based subsystems as shown on the project documents, points lists, drawings and as described in these specifications. This scope of work shall include a complete and working system including all engineering, programming, controls and installation materials, installation labor, commissioning and start-up, training, final project documentation and warranty.

B. SYSTEM ARCHITECTURE: Refer to project drawings.

C. PROJECT DRAWINGS AND SPECIFICATIONS:

1. The work of the single Building Management System Contractor shall be as defined individually and collectively in all Sections of this Division's specifications together with the associated project drawings and the associated interfacing work as referenced in the related documents.
2. The project's control diagrams and drawings are diagrammatic only and are provided to show overall design intent. These shall not be utilized for installation configuration or mounting.

D. SCOPE OF WORK:

1. Furnish all labor, materials, and equipment necessary for a complete and operating Building Management System, utilizing Direct Digital Controls as shown on the drawings and as described herein.

E. DESIGN SCOPE INTENT:

1. OVERVIEW: This section contains the design intent and functionality of the Building Management System.
2. PEER-TO-PEER: All Niagara DDC Controllers furnished in this section shall communicate on a peer-to-peer bus over an open protocol communications (Examples: BACnet®, LonTalk, Modbus) or IP Network.
3. OPEN SOURCE – OPEN SYSTEM: The intent of this specification is to provide a Building Management System that is based on an Open Source – Open System Platform that is consistent with Building Management System throughout the owner's facilities running the Honeywell Niagara 4 Framework™.
4. PROTOCOLS: Building Management System architecture shall fully support a multi-vendor environment and be able to integrate third party systems via vendor protocols including, as a minimum, BACnet®, LonTalk, KNX, and Modbus.
5. DATA EXPORTING: Building Management System shall be capable of data export via native MQ Telemetry Transport (MQTT).

6. SECURE BOOT: All Niagara portability hardware licenses and certificates shall utilize crypto chip and onboard memory for “secure boot”.
7. SECURE ACCESS: Building Management System architecture shall provide secure Web access using any of the current versions of Microsoft Internet Explorer, Mozilla Firefox, or Google Chrome browsers from any computer on the owner's LAN.
8. EMBEDDED TOOLSET AND SOFTWARE:
   a. All control devices furnished with this Section shall be programmable directly from the Niagara 4 Workbench embedded tool set. The use of configurable or programmable controllers that require additional software tools for initial/ post-installation maintenance shall not be acceptable.
   b. N4 ONLY: Only systems that utilize the Niagara 4 Framework® shall satisfy the requirements of this section. Any control vendor which requires or provides additional BMS server software shall not be acceptable.
9. OWNER ADMINISTRATION ACCESS: The “Owner” shall receive all Administrator level login and passwords for engineering toolset at first training session. The “Owner” shall have full licensing and full access rights for all network management, operating system server, engineering and programming software required for the ongoing maintenance and operation of the BMS.
10. OPEN NIC STATEMENTS - All Niagara 4 software licenses shall have the following
    a. NiCS:
       1) "accept.station.in=*"
       2) "accept.station.out=*"
       3) "accept.wb.in=*"
       4) "accept.wb.out=*".
    b. All open NIC statements shall follow Niagara Open NIC specifications.

F. OPEN SOURCE:

1. The Building Management System Shall Open Source, consisting of materials and components which are available through Open-Source product procurement suppliers.
2. Single source exclusivity or other conditions which inhibit the “Owner” from obtaining both materials and support services from less than three independent procurement avenues of *shall not be* acceptable.
3. The BMSC shall provide the Open-Source names, addresses, and contact information of at three (3) additional independent sources of acquiring the Building Management System products upon the request of the A-E.

G. OPEN SYSTEM - PLATFORM AND PROTOCOL:

1. Only a Building Management System that utilizes the Niagara 4 Framework™ shall satisfy the requirements of this section.
2. Each Network and DDC controller shall be peer-to-peer communicating using the BACnet® Open Systems protocol and shall communicate via the district's Wide Area Network (WAN).
3. NIAGARA 4 PLATFORM: The BMSC shall furnish and install a complete Honeywell Niagara N4 Framework™ Building Management System including all necessary hardware, all operating and applications software necessary to perform the control sequences.
4. BACnet® PROTOCOL: The new Niagara DDC Controllers furnished in this section shall be an Open System platform, all programming of the shall utilize the Open Niagara N4 Platform embedded software package and communicate peer-to-peer via the Open ASHRAE 135 BACnet® communications protocol.
5. NO PROPRIETARY PROTOCOLS:
   a. Existing proprietary networks or system that are not as specified may be required to be integrated to the Building Management System or replaced entirely.
   b. Expansion of these proprietary protocols shall not be acceptable.
   c. Examples of unacceptable proprietary communication networks are (but not limited to) Johnson N2, Siemens Apogee, Alerton IBEX, Carrier Comfort Network, Trane Comm 3 or 4, Honeywell C-Bus, Arcnet, etc.
6. UNACCEPTABLE: Building Management Systems that do fully utilize and conform to the Open Niagara 4 Framework™ platform through their design or require additional software tools for post installation maintenance are not acceptable.

H. COMMON COMPONENTS:

1. All material and equipment shall be standard components, regularly manufactured for this and/or other systems and not custom designed specifically for this project.
2. All devices and components shall have been thoroughly tested and proven in actual use for at least two years prior to this project.
3. The Building Management System shall be comprised of the following components:
   a. Computer(s)
      1) Building Management System Archival Data Server (ADS)
      2) Thin-Client Workstation(s) (TCWS)
   b. Network(s)
      1) Network Routers, bridges, switches, hubs, interfaces, and the like equipment.
      2) IP Communications Network

3) BACnet® MS/TP Communications Network
4) Third party system Data Integration.

c. Control System Software
1) Web-Browser Graphics User Interface (GUI)
2) System Graphic
3) System Scheduling
4) System Trending
5) Alarm Management

d. Niagara-4 Direct Digital Controllers
1) Supervisory Network Controller(s) (SNC)
2) Building Level Controllers (BC)
3) Input/Output Expansion Modules

e. Power Supplies
1) Uninterruptable Power Supplies (UPS)
2) Control Transformers (XT)

I. NIAGARA INTERFACE CONFORMANCE (NICS) STATEMENTS:

1. All NICS shall follow the Open Niagara Interface Conformance specifications.
2. To ensure quality, any additional JACE hardware products used on this project shall come through the Tridium Richmond, VA shipping facility.
3. JACE hardware products not meeting these requirements *shall not be* allowed.

J. PEER TO PEER COMMUNICATIONS:

1. Provide a peer-to-peer networked, distributed control system with the ability to integrate ANSI/ASHRAE Standard 135-2001 BACnet® technology in one open, interoperable system.
2. The BMS controllers shall be able to access any data from, or send to control commands and alarm reports to, any other BMS controller or combination of controllers on the network without dependence upon a central or intermediate processing device.
3. The BMS controllers shall also be able to send alarm reports to multiple operator workstations without dependence upon a central or intermediate processing device.
4. Proprietary communication networks are not acceptable. Examples of unacceptable proprietary communication networks are (but not limited to) Johnson N2, Siemens Apogee, Alerton IBEX, Carrier Comfort Network, Trane Comm 4, Trane Comm 3, Honeywell C-Bus, Arcnet, etc.

K. IN-HOUSE DESIGN:

1. The Building Management System design shall be by the BMSC's in-house engineers.

L. BUILDING MANAGEMENT SYSTEM CONTRACTOR'S (BMSC) RESPONSIBILITY:

1. The BMSC shall provide a complete and operating Building Management System (BMS).
2. The Building Management System (BMS) existing Direct Digital Controls as shown on the drawings and as described herein.
3. The Building Management System Contractor (BMSC) shall prior to bidding, field verify the proposed new and existing equipment locations and quantities.
4. The BMSC shall be responsible for the full quantity and scope as the field conditions dictate.
5. The BMSC shall provide a complete, neat, and workmanlike installation using only directly employed who are skilled, experienced, trained, and familiar with the specific equipment, software, standards, and configurations to be provided for this Project.
6. The BMSC shall manage and coordinate the Building Management System work in a timely manner in consideration of the Project schedules and shall coordinate with the associated work of other trades so as to not impede or delay the work of associated trades.
7. The BMSC shall provision all labor, materials, tools, equipment, software, software licenses, software configurations and database entries, interfaces, wiring, tubing, installation, labeling, engineering, calibration, documentation, samples, submittals, testing, commissioning, training services, permits and licenses, transportation, shipping, handling, administration, supervision, management, insurance, temporary protection, cleaning, cutting and patching, warranties, services, and items, even though these may not be specifically mentioned in this section which are required for the complete, fully functional Building Management System.

M. BUILDING MANAGEMENT SYSTEM INSTALLATION LABOR:

1. The Building Management System (BMS) shall be complete in all respects including labor, materials, equipment, and services necessary, and shall be installed by personnel regularly employed by the Building Management System Contractor (BMSC). The Building Management System Contractor (BMSC) shall utilize Union electrician labor for all the system installation.

N. SINGLE FAULT INDEPENDENCE:

1. The Building Management System (BMS) network riser architectural design shall eliminate dependence upon any single device for alarm reporting and control execution.

2. Each Niagara 4 DDC controller shall operate independently by performing its own specified control, alarm management, operator I/O, and data collection.
3. The failure of any single component or network connection shall not interrupt the execution of any control strategy, reporting, alarming, and trending function, or any function at any operator interface device.

O. ALARMS:

1. The Niagara DDC Controllers shall also be able to send alarm reports to multiple operator workstations without dependence upon a central or intermediate processing device.

P. SECURITY:

1. The Niagara DDC Controllers shall be able to assign password access and control priorities to each point individually.
2. The Logon password shall enable the operator to monitor, adjust or control only the points that the operator is authorized.
3. All other points shall not be displayed at the PC workstation or portable terminal.
4. Passwords and priority levels for every point shall be fully programmable and adjustable.

Q. SCALABILITY: The Building Management System shall be scalable in nature and shall permit expansion of both capacity and functionality through the addition of sensors, actuators, DDC Controllers, and operator interface devices.

R. SPARE CAPACITY: All Niagara DDC Controllers shall be installed with 20% spare points (of each type) and 50% spare memory capacity.

S. GRAPHICAL USER INTERFACE - WEB-BROWSER:

1. The “Owner” shall provide any Thin Client Web Stations (TCWS). The Operator shall be able manage the Building Management System through a connected Thin Client Web Station’s web-browser.
2. CUSTOMIZED GRAPHICS – HTML 5 WEB-PAGES:
   a. Graphics must be exclusively coded in HTML 5 and shall reside and be accessible on the controller of which the input/output is controlled, with the exception of the main site graphic, map, and index available from the supervisory station.
   b. The Building Management System Contractor (BMSC) shall provide 3-dimensional web graphics. Including all floor plans, new mechanical systems, boilers, pumps, fans, unit ventilators, roof top units, coils, etc.

c. All new Building Management System (BMS) web graphics for this project shall match any existing web graphics in design features and esthetics.

d. The Building Management System shall allow operator to monitor, control and schedule the HVAC equipment from any standard web-browser over the Internet, or TCP/IP connection.

e. All control points and parameters of the Graphical User Interface shall be on standard web-browser.

f. The equipment I/O points shall be displayed in real-time and shall be dynamically updated without requiring a manual refresh of the graphics page.

g. The operator shall be able to interact with all 3-D Graphics, scheduling, alarming, and reporting, including the graphical processes generation.

h. All software licensures and software maintenance required to for the Building Management System programs and graphics shall be included.

i. The web graphic files shall reside in the individual Supervisory Network Controllers.

j. Copies of the web graphics shall be retained in the Building Management System Archival Data Server.

T. INTEGRATION COMMUNICATIONS:

1. The Building Management System (BMS) network architecture shall fully support a multi-vendor environment and be able to integrate third party systems via existing vendor protocols including, BACnet® MS/TP; BACnet® IP; LonTalk; and MODBUS RTU.

2. Fully integrate the HVAC equipment OEM controls into the Building Management System via an Open communications protocol.

3. Provide hardware, software, and wiring for communication interfaces.

U. ADDITIONAL FEATURES:

1. The Building Management System Information Management includes:

a. System programming

b. DDC Device downloading

c. DDC Device backup and archiving.

d. Building Management System data archiving and retrieval

e. Data Reporting functions.

f. Standard applications for HVAC systems.

g. Diagnostic monitoring and reporting of Building Management System functions.

h. Offsite monitoring and management access.

i. Energy Management

V. SYSTEM OWNERSHIP - FULL CLEARENCE AND SYSTEM ACCESS:

1. The “Owner” shall have full licensing and full access rights for all network management, operating system server, engineering, and programming software required for the ongoing maintenance and operation of the Building Management System and shall receive all Administrator level logins and passwords.
2. All of the Building Management System I/O points along with their associated control parameters, calculations and variables shall be accessible via any Web Browser through a secured connection to the Building Management System.
3. Upon completion of the project, the Building Management System Contractor (BMSC) shall provide the “Owner” with the entire programming software including original installation discs.

W. LICENSE STORAGE:

1. All JACE hardware licenses and certificates shall be stored on local MicroSD memory card employing encrypted “safe boot” technology.

X. ESOTERIC OMISSIONS:

1. Minor details not usually shown or specified but necessary for proper installation and operations shall be included, as if herein specified and/or shown.
2. The omission of hardware, firmware, and software components required to satisfy the specified configuration(s), but not specified due to the esoteric requirements of a particular manufacturer’s product design shall not relieve the Building Management System Contractor from the responsibilities of providing and installing omitted apparatuses, (i.e. feed-back circuits, calibration resistors, and override detection interface devices).

1.4 SPECIFICATION NOMENCLATURE

A. ACRONYMS, ABBREVIATIONS AND DEFINITIONS:

1. Reference Appendix A and B.

1.5 COORDINATION AND WORK RESPONSIBILITY AND MATRIX

A. CONTRACTOR RESPONSIBILITY DEMARCATION:

1. The demarcation of work and responsibilities between the Building Management System Contractor and other related trades shall be as outlined in the “Coordination and Work Responsibility Matrix” below:

Coordination and Work Responsibility Matrix					
	Work Description	Furnish	Install	Low Voltage Wiring	Power Wiring
	BMS I/O control wiring	BMSC	BMSC	BMSC	BMSC
	BMS Network communications wiring	BMSC	BMSC	BMSC	-
	BMS Enclosures	BMSC	BMSC	BMSC	26
	BMS Control Panels	BMSC	BMSC	BMSC	26*
	BMS conduits and raceways	BMSC*	BMSC*	-	-
	OEM Equipment Interface and Labor	OEM	BMSC	BMSC	-
	OEM Equipment Communication wiring	BMSC	BMSC	BMSC	
	Air Conditioning - Split System	OEM	BMSC	BMSC	26
	Condenser Unit Interlock wiring	BMSC	BMSC	BMSC	26
	Energy Recovery Ventilator controls	BMSC	BMSC	BMSC	26
	VRF Fan Coil Unit controls	OEM	BMSC	BMSC	26
*Reference Equipment Unit Schedule and specification, BMS Diagrams. Responsibility or work is additionally specified under separate sub-sections.					
	GC	General Contractor			
	23	Division 23 Mechanical Contractor			
	26	Division 26 Electrical Contractor			
	BMSC	Division 23 Building Management System Contractor			
	OEM	Original Equipment Manufacturer			
	SM	Division 23 Sheet Metal Contractor			
	TAB	Testing and Balancing Contractor			

B. BUILDING MANAGEMENT SYSTEM CONTRACTOR (BMSC):

1. The Building Management System contractor (BMSC) shall provide electrical work as required in the specification, including:
   a. Installation of all control wiring by a New York licensed Electrical Contractor.
   b. All Building Management System electrical work, except as otherwise specified, or shown on the Division 26 Electrical specifications or drawings.
   c. Installation of control wiring may include line and low voltage wiring, as required.
   d. Power wiring (120 VAC) for the Building Management System, including control panels, DDC controllers, actuators, and sensors from a designated circuit furnished by the Division 26 Electrical Contractor.
   e. All control wiring in mechanical equipment spaces shall be installed in EMT.
   f. The conduit for power may be used for running control line voltage wiring.
   g. Low voltage plenum rated wiring can be run exposed above accessible ceiling and shall be supported per code and not laid on ceiling tile grid.
   h. Low voltage wiring shall be concealed in finished rooms. If any wiring must be exposed in rooms, it shall be installed in wiremold raceway.
   i. A monitoring point from the smoke detectors to the DDC controller for status. Where multiple detectors are provided, one signal shall be provided.

j. Coordinate location of thermostats, humidistats, and other exposed control sensors with flow diagrams and sequence of operation and points list before installation.

C. DIVISION 26 ELECTRICAL CONTRACTOR (DIV 26):

1. The Division 26 Electrical Contractor Work shall be responsible for:
   a. All interlock and wiring on the Division 26 Electrical specifications or drawings.
   b. Coordination with the BMS Contractor (BMSC) for any required field control panel circuit feeds.
   c. The Division 26 Electrical Contractor shall as part of his contract, provide 1P-20A circuit breakers in the power and lighting distribution panels.
   d. All power wiring to motors, heat trace, junction boxes for power to Building Management System panels.
   e. All work and wiring as related to smoke detectors, Fire/Smoke dampers, and the Fire Alarm System (FAS).

D. DIVISION 23 MECHANICAL CONTRACTOR (DIV 23):

1. The Division 23 Mechanical Contractor shall be responsible for:
   a. The installation of automatic control valves.
   b. The installation of flow meters or switches.
   c. The installation of thread-o-lets and thermowells.
   d. The installation of pressure sensor taps and associated shut-off/bypass cocks.
   e. The installation of any other devices required in the piping.
   f. The installation of external dampers, access doors and blank plates.
   g. The Provision of all external control dampers shall be by the Sheet Metal contractor.
   h. The Provision of all internal control dampers shall be by the OEM manufacturer.
   i. The installation of airflow measuring stations.
   j. The Provision and installation of smoke dampers.
   k. The Provision and installation of duct smoke detectors.
   l. Any motor starters furnished by the Mechanical Contractor shall have control transformers and one set of auxiliary contacts, as required for interlocking.
   m. The Installation of other devices required to be installed into the ductwork portion of the HVAC contract and as otherwise determined by tradeline jurisdictions.

1.6 PROJECT SITE CONDITIONS

A. PROJECT SEQUENCING:

1. Ensure that products of this section are supplied to affected trades in time to prevent interruption of construction progress.

B. COMPONENT INSTALLATION:

1. Coordinate location of wall mounted sensors with plans and details prior to installation.

C. POWER SOURCE:

1. Coordinate the supply of conditioned electrical branch circuits for control units and operator workstation with the Division 26 Electrical contractor.
2. Coordinate equipment with the appropriate Divisions of the Electrical Specifications for Power, Wiring, Conduit, Fire Alarm, Motor Control Centers, etc. to achieve compliance, compatibility, and interfaces.

D. THIRD PARTY INTEGRATION:

1. Coordinate equipment with the appropriate Divisions of the Mechanical Specifications for Motor Controllers, Manufacturer Supplied Controls, etc. to achieve compliance, compatibility, and interfaces.

E. CHANGES IN SCOPE OF WORK:

1. Any changes in the scope of work must be authorized by a written Change Order, and issued by the customer, in accordance with Contract conditions.

F. CORRECTION OF WORK:

1. The Building Management System Contractor shall promptly correct all Building Management System work found to be defective or failing to conform to the Contract Documents at no additional cost.

1.7 PERFORMANCE STANDARDS

A. STANDARD MATERIAL/PRODUCTS:

1. All material and equipment used shall be standard components, regularly manufactured and available, and not custom designed especially for this project

B. MODULAR DESIGN:

1. The system architecture shall be fully modular permitting expansion of application software, system peripherals, and field hardware.

C. PERFORMANCE:

1. The Building Management System shall upon completion of the installation and prior to acceptance of the project, perform all operating functions as detailed in this specification.

D. OPEN PROTOCOL COMMUNICATIONS (OPEN SYSTEM):

1. The Building Management System (BMS) shall utilize and be in in compliance with the ASHRAE-135 BACnet® Open protocol and LAN types throughout the entire Building Management System network Hierarchy.
2. Non-BACnet® compliant or propriety equipment or systems (including gateways) *shall not be* acceptable and are specifically prohibited.

E. OPEN SOURCE PRODUCTS:

1. All Building Management System Niagara DDC Controllers shall be available through multiple avenues for procurement and from multiple sources.
2. The owner shall have at least three (3) independent sources for obtaining Building Management System devices and product. Single source, Original Equipment Manufacturer (OEM) provided, or territorial limitations are unacceptable.
3. All of the Niagara DDC Controllers shall be integrated into a distributed network system communicating over an Internet Protocol communications network.
4. All web graphics shall be generated for interface with a standard web browser. The Operator shall interface with the Building Management System from any standard browser over a TCP/IP connection.

F. CUSTOMIZED 3-DIMENSIONAL COLOR GRAPHICS - WEB BASED:

1. The Building Management System shall be tested using manufacturer's recommended hardware and software for Operator Workstation (Web Server and web browser).
2. All Web Based Graphics shall be generated on the workstation for use over the Web.
3. The web browser shall depict the equipment’s animated graphics, scheduler graphics, alarm screens, point and click setpoint adjustments, point and click alarm acknowledgements and resets and other graphics displays required by Operator.
4. The Building Management System (BMS) architecture shall provide secure Web access using any of the current web browsers from any computer on the “Owner’s” LAN.
5. The Building Management System connected equipment to be monitored, controlled, and scheduled from web client computers onsite and remote sites.
6. The units shall be dynamically depicted in 3 dimension aspect, with animated components in real time.

7. All Building Management System interface points shall be on standard PC web browsers that do not require any special software from the Building Management System manufacturer for use as a GUI.

G. WEB GRAPHIC DISPLAY:

1. The Graphics screens may have up to 20 dynamic points with current data, display this data within 10 seconds.
2. The Graphic screens shall automatically refresh every 15 seconds.

1.8 QUALITY ASSURANCE

A. SPECIFIC PROJECT REQUIREMENTS:

1. In the submittal, the Building Management System contractor (BMSC) shall indicate Full Conformance and Compliance to the following requirements:
   a. No Proprietary communications protocol at any level.
   b. The database must be a standard Niagara 4 Open Database.
   c. All Building Management System must communicate over the Wide Area Network (WAN).
   d. All Building Management System graphics shall utilize Niagara 4 Web-based 3-D structure.
   e. All new BACnet® Niagara DDC Controllers must communicate over the Honeywell (WEBs) Communication Network and use the Niagara N4 Framework™ for the owner interface into the Building Management System.

B. SINGLE SOURCE RESPONSIBILITY:

1. A single Building Management System Contractor (BMSC) shall be responsible for the complete installation and proper operation of the control system.
2. This Building Management System contractor (BMSC) shall be exclusively in the regular and customary business of designing, installing, and servicing computerized Building Management Systems, similar in size and complexity to the Building Management System specified.
3. The device and electrical installation is allowed to be sub-contracted to a single qualified controls installation sub-contractor under the supervision of the Building Management System Contractor (BMSC).

C. FACTORY AUTHORIZED REPRESENTATIVE:

1. The Building Management System contractor (BMSC) shall be a fully certified, factory authorized & licensed representative for the Building Management Systems (BMS) manufacturer.
2. The BMSC shall have attained the highest recognition of certification of quality installations available (ACI-Direct) and shall have maintained this rating as an authorized representative for the Building Management System DDC components for a minimum of 10 years.
3. The Building Management System Contractor (BMSC) shall have a minimum of (40) directly employed and licenced (subcontracted staff *shall not be* acceptable) full time technicians who have certification Honeywell (WEBs-N4) for the Building Management System specified.

D. COMPLEXITY AND PROJECT MAGNITUDE:

1. The Building Management System Contractor (BMSC) shall be responsible for the complete installation and proper operation of the control system. The BMSC shall exclusively be in the regular and customary business of design, installation, and service of computerized Building Management System similar in size and complexity to the system specified.
2. As evidence and assurance of the Building Management System Contractor's (BMSC) ability to support the installation, the BMSC must have successfully completed at least ten (10) total projects utilizing the approved controls, at least five (5) times the value of this contract in each of the preceding five (5) years.

E. EXPERIENCE & LONGEVITY:

1. The Building Management System contractor (BMSC) shall be representative for an approved Building Management System (BMS) manufacturer for at least five (5) years and shall have a proven record of successful installations and integrations with the approved BMS manufacturer's control equipment proposed for the project.
2. As evidence and assurance of the Building Management System Contractor's (BMSC) ability for system support, post-completion with service and parts, they shall have been a manufacturer licensed provider for minimum of ten (10) years and have successfully completed a minimum of ten (10) projects in each of the preceding five (5) years of five (5) times the value of this contract
3. A list of projects of comparable scope, detailing the Building Managements System (BMS) communications integrations involved in this project shall be provided to the A-E.

F. CONTROL SYSTEM EXPERTISE:

1. The Building Management System Contractor's (BMSC) primary business shall be regularly engaged in the engineering, programming, installation, and service of total integrated Building Management Systems as specified.
2. The Building Management System Contractor's (BMSC) business shall be dedicated solely to that of "Automation Temperature Controls & Building Management Systems". Any contractor whose business discipline does not Solely concentrate to these categories *shall not be* acceptable.

G. OFFICE LOCALITY:

1. The Building Management System Contractor (BMSC) shall have an established office staffed with directly employed (not subcontracted) design engineers, and ten (10) system certified (WEBs-N4) service technicians within 50 miles of project site.
2. Three of the ten (10) system certified (WEBs-N4) service technicians shall live within a 50-mile radius of the project location.

H. EMERGENCY RESPONSE:

1. The Building Management System contractor (BMSC) shall have an established 24-hour Emergency service organization and shall provide a 24-hour Emergency contact information to the owner.
2. This Emergency point of contact shall be a "live" person, voice mail *shall not be* acceptable.

I. CERTIFIED AVAILABILITY OF READY STOCK REPAIR PARTS:

1. The Building Management System contractor (BMSC) shall maintain and have an independently certifiable on hand ready repair spare parts inventory, consisting of Niagara 4 Direct Digital Controllers, sensors, and electronic service parts with an listed value of at minimum of $200,000 per year over each of the preceding five (5) years. The certification shall be provided to the A-E upon requested.

1.9 SUBMITTALS

A. SUBMISSION:

1. Submit under provisions of Section 01 33 23 Shop Drawings, Product Data, and Samples.
2. Submittals shall be in defined packages.
3. Each package shall be complete and shall only reference itself and previously submitted packages.

4. The packages shall be approved and reviewed by the Architect and Engineer (A-E) for contract compliance.
5. Any deviations from these specifications or the work indicated on the drawings shall be clearly identified in the Submittals.

B. SUBMISSION PERIOD:

1. The Building Management System contractor (BMSC) shall submit a list of projected dates of required submittals within thirty (30) days of contract award.

C. SUBMITTAL MEDIUM:

1. The Building Management System contractor (BMSC) shall provide a submittal in both hard and soft copy, for review prior to ordering or fabrication of the equipment.

D. SUBMITTAL REVIEW PERIOD:

1. Allow 15 working days for the review of each package by the Architect and Engineer in the scheduling of the total Building Management System design work.

E. CORRECTION – RESUBMISSION:

1. The Building Management System Contractor (BMSC) shall correct any errors or omissions noted in the first A-E review, and provide a resubmission for approval, showing corrections prior to installation. Any further subsequent resubmissions for errors or corrections previously noted shall be at the expense of the Building Management System Contractor (BMSC).

F. DEVIATIONS IDENTIFIED:

1. Any deviations from these specifications or the work indicated on the drawings shall be clearly identified along with a comparison of the specific design limitations in the Submittals. Evident intended and unidentified deviations from the specification shall be grounds for submittal “Rejection”.

G. CONTROL DESIGN DRAWINGS AND PRODUCT DATA:

1. DESIGN PERIOD: The Building Management System contractor shall submit a list of all shop drawings with submittals dates within 30 days of contract award.
2. SUBMITTALS:
   a. Submittals shall be in defined packages.
   b. Each package shall be complete and shall only reference itself and previously submitted packages.

c. AUTOCAD: Prepare all shop drawings in the latest version of AutoCAD Software. The Building Management System contractor shall furnish an electronic copy with the submittal. Provide drawings as AutoCAD compatible files (.dwg, .dxf, .vsd,) of each drawing.

d. Provide shop drawings and other specified submittals on the Building Management System hardware, software, and equipment to be installed or furnished.

e. The packages shall be approved/reviewed by the Architect and Engineer(A-E) for Contract compliance.

f. When manufacturer's cutsheets apply to a product series rather than a specific product, clearly indicate applicable data by highlighting or by other means.

g. General catalogs *shall not be* accepted as cut sheets to fulfill submittal requirements.

3. INDEX: Prepare an index sheet of all submittals and shop drawings for the installation. Index shall include a shop drawing identification number, Contract Documents reference and item description. Clearly reference covered specification and drawing on each submittal.

4. SUBMITTAL CONTENTS: At a minimum, submit the following:

a. BMS NETWORK ARCHITECTURE DIAGRAMS:

1) Riser diagrams showing network switch locations, network topology including control network layout, communication protocol, and wire types. Showing including all nodes and interconnections. Schematic diagrams of all control, communication, and power wiring for central system installation. Show interface wiring to control system.

b. SEQUENCE OF OPERATION: Complete description of control system operation including sequences of operation. Include and reference schematic diagram of controlled system.

c. SYSTEMS SCHEMATICS: Shop drawings shall also contain complete wiring and schematic diagrams, sequences of operation, control system bus layout and any other details required to demonstrate that the system has been coordinated and shall properly function as a system. Label control elements and terminals. Where a control element is also shown on control system schematic use the same name.

d. IDENTIFICATION: Shop drawings shall specific terminal identification for all control wiring shall be shown on the shop drawings (i.e., point to point diagram).

e. POINT SCHEDULES: System Schematics of each mechanical system shall show all connected input/output control points, controllers, power supplies, system diagram, end device details, termination points and wire and type required from

control panel to end device with reference to their associated controller. Points schedule for each point, including:

1) Point Types
2) Object Names
3) Expanded IDs
4) Display Units
5) Controller types
6) Controller Addresses.
7) Point list for each controller including
    a) Inputs and outputs (I/O)
    b) Point numbers
    c) Controlled device associated with each I/O point
    d) Location of the I/O device
8) Point names shall be coordinated with “Owner” and engineer.
9) Provide a list of Building Management System point naming convention. Indicate the format, structure, and standards of typical point names.
10) EXAMPLES: The naming shall follow the “A3.FLR#.EQUIPx.POINTx” format.
    a) A3 = Building A3
    b) FLR# = Floor of building
    c) EQUIP = 6-10 character equipment tag per the schedules and numbered per the plans. Ex. AHU01.SAT = Air Handler 1 Supply Air Temperature.
    d) POINT = 3-5 character standard nomenclature for each point type (i.e., SAT = Supply Air Temperature)
11) Provide character capability for VAV boxes to be named by Floor, Air Handling Unit Served, Room Number/Name or VAV box tag, unbundled point description such as Room Temp such that a VAV box on the 3rd floor served by AHU-01 = “FLR3.AHU04.VAV.C313: Room Temp”
12) Provide a list of point names for typical equipment and functions with specific examples.

f. GRAPHICS: Samples of Graphic Display screen types and associated menus.

g. BILL OF MATERIALS: Complete bill of material indicating quantity, manufacturer, model number, and relevant technical data of equipment used. Manufacturer’s description and technical data such as product specifications for items listed below and for relevant items furnished under this contract not listed below. When manufacturer's product datasheets apply to a product series rather than a specific

product model, clearly indicate and highlight only applicable information. Each submitted piece of product literature should clearly cross reference specification and drawings that submittal is to cover.

h. CHECKOUT SHEETS: Examples of written Unit Controller Checkout Sheets and Performance Verification Procedures for applications similar in scope shall be included for approval.

i. FIELD LOCATIONS: The Building Management System Riser Diagrams shall depict the locations of all controllers and workstations, with associated network wiring.

j. TYPICAL DRAWINGS: Typical drawings shall be allowed, where appropriate.

k. INTERFACE SCHEDULE:

1) Details of all ATC interfaces and connections to the work of other trades. Master Integration Plan shall include:

2) Network communications Topology between interfaced systems

3) Planned Network Protocol

4) Alarmed Points

5) Point Database

6) Sequence of Operations

l. OPERATOR WORKSTATION SCHEDULES:

1) Display data, CPU, Processer speed, HD etc.

m. PRODUCT DATA SHEETS: Include Data sheets or marked catalog pages including part number, photo and description for all products including software. Manufacturer’s description and technical data, such as product specification sheets, installation and maintenance instructions for items listed below and for relevant items not listed below:

1) Construction details, material descriptions, dimensions of individual components and profiles, and finishes.

2) Operating characteristics, electrical characteristics, and furnished accessories indicating process operating range, accuracy over range, control signal over range, default control signal with loss of power, calibration data specific to each unique application, electrical power requirements, and limitations of ambient operating environment, including temperature and humidity.

3) Product description with complete technical data, performance curves, and product specification sheets.

4) Installation, operation, and maintenance instructions including factors effecting performance.

5) Preparation instructions and recommendations.
6) Storage and handling requirements and recommendations.
7) Installation methods.

n. COMPLIANCE CERTIFICATES:
1) NICs for each Niagara 4 BMS controller certifying that each proposed DDC system component complies with Niagara
2) PICs for each BACnet® controller certifying that each proposed DDC system component complies with ASHRAE 135.

H. AS-BUILT DRAWING SUBMITTAL:

1. All drawings shall be reviewed after the final system checkout and updated or corrected to provide 'as-built' drawings to show exact installation.
2. All shop drawings shall be acknowledged in writing by the owner before installation is started and again after the final checkout of the system.
3. The Building Management System shall not be considered complete until the 'as-built' drawings have received their final approval.

I. OPERATION AND MAINTENANCE (O&M) MANUAL SUBMITTAL:

1. Upon completion of the work of this Section, the Operation and Maintenance Manuals shall be provided to the “Owner’s” Representative.
2. The Operation and Maintenance Manual electronic media shall be self-contained, and include all necessary software required to access the product data sheets.
3. A logically organized table of contents shall provide dynamic links to view and print all product data sheets.
4. The Viewer software shall provide the ability to display, zoom, and search all documents. This shall include the following categories:
5. The Names, address and 24 hour telephone numbers of Contractors installing equipment, and the control systems and service representative of each.
6. The Workstation User's Manual shall contain Step by step procedures for each operator function, including:
   a. launching a web browser from a networked PC and login
   b. Web Browser screen menus and their functions
   c. Creating, modifying, or deleting schedules
   d. Uploading and downloading software to the field hardware
   e. Creating historical trends, collecting trend data, and generating trend graphs
   f. Enabling and assigning alarms and messages to reporting actions/groups
   g. Report generation and ‘third party software’

h. Backing up software and data files

7. The Project Engineering Manual for the project shall contain:
   a. System architecture overview and networking configuration
   b. Hardware cut-sheets and product descriptions

8. The Building Management System Contractor (BMSC) shall deliver 'as-built' drawings. All drawings shall be reviewed after the final system checkout and updated to provide 'as-built' drawings. The system shall not be considered complete until the 'as-built' drawings have received their final approval.
9. Installation, mounting and connection details for all field hardware and accessories
10. Commissioning, setup, and backup procedures for all control modules/accessories, Building Management System server software, and database.
11. Listing of basic terminology, alarms/messages, error messages and frequently used commands or shortcuts.
12. The System Software Documentation shall contain:
    a. The Building Management System Contractor (BMSC) shall provide all Graphical Language Programs, detailing their application to specific HVAC equipment, together library detailing the function.
    b. Graphical relationship of the project’s mechanical equipment hierarchy.
    c. All alarm messages for equipment and operator action required.
    d. Any revisions made because of the submittal process, during the installation, start-up, or acceptance portion of the project, shall be accurately reflected in the "as-builts".
       1) Software Operating manuals.
       2) Control Device address lists
       3) Color Printout of software applications
       4) Color Printout of graphic screens.
       5) All Software licenses.

13. TESTING AND COMMISSIONING REPORTS AND CHECKLISTS: For each product that requires testing to be performed by manufacturer and witnessed by a qualified testing agency.
14. NOTICE OF COMPLETION: When the system performance is deemed satisfactory, the system parts shall be accepted for beneficial use and placed under warranty. At this time, the consultant shall issue a “notice of completion” and the warranty period shall start.
15. SAMPLE WARRANTY: For manufacturer's warranty.

J. MULTIPLE SUBMISSION PACKAGES:

1. If multiple submission packages are required to execute work within schedule, first submit a coordinated schedule clearly defining intent of multiple submission packages.
2. Include a proposed date of each submission package with a detailed description of submittal content to be included in each submission package.
3. Clearly identify each submittal requirement indicated and in which submission package the information shall be provided.
4. Include an updated schedule in each subsequent submission package with changes highlighted to easily track the changes made to previous submitted schedule.

K. SUBMISSION PACKAGE REVIEW:

1. Allow 15 working days for the review of each submittal package by the Architect and Engineer (A-E) in the scheduling of the total Building Management System work.
2. The Building Management System Contractor shall correct any errors or omissions noted in the initial review.
3. The Building Management System Contractor (BMSC) shall not begin any work, including ordering or installing any hardware, wiring, control devices, or software, until the applicable submittal package has been approved for conformity with design intent. The Submittal package shall be required to be either “Approved” or accepted notations by the BMSC as “Approved as Noted” as such.

L. PERMITTING/APPROVALS:

1. Equipment and specific control systems which require approval of the local authorities having jurisdiction, which must comply with such regulations shall be approved by such prior to installation.
2. Where filing is necessary, the expense shall be borne by the Building Management System Contractor.
3. Provide a copy of all related correspondence, permits and approvals to the “Owner” and A-E.

1.10 PROJECT MANAGEMENT

A. PRE-INSTALLATION COORDINATION MEETINGS:

1. A meeting shall convene a minimum of two weeks prior to starting work of this section.

B. PROJECT MANAGEMENT:

1. The Building Management System contractor (BMSC) shall designate an experienced Building Management System Project Manager who shall manage the Building Management System installation and commissioning.

2. The designated BMSC Project Manager shall be empowered to make technical, scheduling and field related decisions on behalf of the Building Management System Contractor.
3. As a minimum, the BMSC Project Manager shall manage the scheduling of the work to ensure that adequate materials, labor, and other resources are available as needed; Manage the financial aspects of the Building Management System Contract; Coordinate as necessary with other trades; Be responsible for the work and actions of the Building Management System contractor workforce on site.

C. COOPERATION WITH OTHER TRADES:

1. Coordinate the Work of this section with that of other sections to ensure that the Work shall be carried out in an orderly fashion.
2. It shall be the Building Management System Contractor's responsibility to check the Project and Contract Documents for possible conflicts between his Work and that of other crafts in equipment location, pipe, duct, and conduit runs, electrical outlets and fixtures, air diffusers and structural and architectural features.
3. The Building Management System Contractor shall repair any damage caused by his work to the building(s) and equipment at no additional cost to the owner.

D. PERMITTING:

1. The Building Management System devices which require approval of local authorities shall comply with such regulations and shall be approved by such prior to installation.
2. Where filing is necessary, unless stated otherwise in the project documents, the expense shall be by the Building Management System Contractor (BMSC).
3. Provide a copy of all related correspondence and permits/approvals to the “Owner”.

E. WORKPLACE SAFETY PROGRAM:

1. The Building Management System Contractor (BMSC) shall:
   a. Provide a safety program in compliance with the Contract Documents.
   b. Have a corporately certified comprehensive Safety Certification Manual
   c. Have a designated Safety Supervisor for the Project.
   d. Comply with federal, state, and local safety regulations.
   e. Ensure that all sub-contractors and employees have written safety programs in place that covers their scope of work, and that their employees receive the training required by the OSHA having jurisdiction for at least each topic listed in the Safety Certification Manual.

f. Sign and date a safety certification form prior to any work being performed, stating that the Building Management System Contractors' and subcontractors' company are in full compliance with the Project safety requirements.

1.11 MATERIAL DELIVERY, HANDLING, AND STORAGE

A. DELIVERY AND HANDLING:

1. The integrity of shipping cartons for each piece of equipment and control device through shipping, storage and handling shall be maintained to prevent equipment damage.

B. SAFE STORAGE: Any onsite equipment and materials shall be stored inside and protected from weather.

1.12 OWNERSHIP OF PROJECT MATERIAL

A. PROGRAMMING AND SOFTWARE:

1. The "Owner" shall have full ownership and full access rights for all network management, operating system server, engineering and programming software required for the ongoing maintenance and operation of the Building Management System (BMS).
2. Project specific software and documentation shall become "Owner's" property.

B. OWNERS ACCESS RIGHTS AND LICENSURE:

1. The "Owner" shall receive all Administrator level login and passwords for the engineering and programming toolset at first training session.
2. The "Owner" shall have full licensing and full access rights for all network management, operating system server, engineering and processes generation software required for the ongoing maintenance and operation of the Building Management System.
3. All software will be licensed to the owner with full password capability and access.
4. Under no circumstances will any part of the Building Management System software be licensed or controlled by the Building Management System Contractor (BMSC).
5. The entire Building Management System design submission, including original software discs, shall be turned over to the owner.

1.13 WARRANTY - MATERIAL AND LABOR

A. WARRANTY PERIOD:

1. Labor and materials for control systems shall be warranted for a period as specified under Warranty in Section 00 72 00, General Conditions, as a minimum the BMSC shall

provide a one (1) year warranty, inclusive of labor and material, with a two (2) year BMS Manufacturer's provided warranty on the Direct Digital Device materials.

2. If within this period from the date of written notice acceptance to the "Owner", it is found to be defective in operation, workmanship, or materials, it shall be replaced, repaired, or adjusted at the option of the Building Management System Contractor (BMSC) at the cost of the BMSC.
3. Warranty work shall be done during the Building Management System Contractor's normal business hours.
4. The BMSC shall maintain an adequate supply of materials within 50 miles of the Project site such that replacement of key parts and labor support, including programming are readily available.
5. If within the warranty period from the Date of Acceptance, upon written notice from the Owner, it is found to be defective in operation, workmanship, or materials, it shall be replaced, repaired, or adjusted at the option of the BMSC at the cost of the BMSC.

B. START OF WARRANTY DATE:

1. Only after the Engineer has determined that equipment and systems operate satisfactorily at the end of final start-up, testing, and commissioning phase, the Engineer shall certify in writing that Building Management System (BMS) operation has been tested and accepted in accordance with the terms of this specification.
2. The Building Management System Contractor (BMSC) shall provide the owner in writing the Date of acceptance and the beginning of the warranty period.

PART 2 - PRODUCTS

2.1 REQUIREMENTS

A. BASIS OF DESIGN:

1. All Building Management System Manufacturers MUST be an IEC 62443-4-1 Certified Development Organization. No Exceptions. This documentation shall be provided as part of the BMS submittal. Failure to do so shall be cause for rejection.
2. The basis of design is a Honeywell Niagara 4 Optimizer Building Management System as designed and installed by a qualified Honeywell Direct Authorized Controls Integrator (ACI-Direct). Only registered and authorized ACI Direct credentialed Direct Honeywell Building Control Integrator certified contractors are acceptable.
   a. AME, Inc , 1275 Bloomfield Ave, Fairfield Nj 07004; https: //www.ame-inc.com/contact-us/, 973-884-4100

B. NON-COMPLIANT AND NON-ACCEPTABLE SYSTEMS INCLUDE:

1. Single sourced or equipment manufacturer provided control systems (Non-Open Sourced) i.e., York, Carrier, Daikin, Trane, etc...

2.2 SYSTEM DESCRIPTION

A. OVERVIEW:

1. The Building Management System specified in this document shall be Web-based, utilizing the Open Source – Open System Niagara 4 Platform.
2. The Building Management System (BMS) shall be comprised of a network of interoperable, stand-alone digital controllers, a network area controller, graphics and programming and other control devices for a complete system as specified herein.
3. The installed system shall provide multi-level secure password access to all software features, functions and data contained in the overall BMS.
4. Tridium Niagara microprocessor-based monitoring and control including analog/digital conversion and program logic.
5. The DDC system shall consist of a high-speed, peer-to-peer network of distributed DDC controllers, other network devices, operator interfaces, and software

B. BACKUP POWER SOURCE:

1. BMS controlled systems and equipment served by a backup power source shall have associated DDC system devices that control such systems served from a backup power source.

C. UNINTERRUPTABLE POWER SUPPLIES:

1. UPS units shall be provided for Critical Niagara BMS DDC systems and shall include the Input/Output Devices, sensors, and actuators associated with the following systems:
2. Niagara BMS DDC devices powered by UPS units shall include the following:
   a. Supervisory Network Controllers (SNC)
   b. Critical System DDC controllers (BC)
   c. Building Management System Servers.
   d. Graphical Operator Workstations.
   e. Alarm Printers.
   f. System Gateways.

D. CONTINUITY OF OPERATION AFTER ELECTRIC POWER INTERRUPTION:

1. Equipment and associated factory-installed controls, field-installed controls, electrical equipment, and power supply connected to building normal and backup power systems shall automatically return equipment and associated controls to operating state occurring immediately before loss of normal power, without need for manual intervention by operator when power is restored either through backup power source or through normal power if restored before backup power is brought online.

2.3 SYSTEM NETWORK ARCHITECTURE

A. DESCRIPTION:

1. OVERVIEW: The intent is to provide an Open, Interoperable, and Integrated peer-to-peer networked Open Source - Open Building Management System (BMS) utilizing distributed web based direct digital controls which communicate over an Open protocols BACnet® communications network in one open, interoperable system.
2. OPEN SOURCE: The Building Management System's BACnet® controllers, materials and components furnished shall be unrestricted and available for acquisition by the "Owner" through multiple independent sources and service providers.
3. COMPONENTS: The Building Management System (BMS) shall be comprised of a network of interoperable, standalone digital controllers (BC, AAC, ASC), a network area controller (SNC), graphics and programming and other control devices for a complete system as specified herein.
4. The installed system shall provide secure password access to all features, functions and data contained in the overall Building Management System.
5. BASIS OF DESIGN: The Building Management System (BMS) is based in the Honeywell (WEBs-N4) BACnet® architecture. The Building Management System shall integrate a wide variety of third party devices and applications.

B. NETWORK ARCHITECTURE:

1. STRUCTURE: The Building Management System shall utilize TCP/IP communications operating at a minimum speed of 100 Mb/sec. on an open architecture consisting of no more than three (3) network tiers capable of the following:
   a. TIER ONE:
      1) IP LAN shall connect Supervisory Network Controllers (SNC), Building Level Controllers (BC) ,Operator workstations (AWS), and 3rd Party IP Integrations.
   b. TIER TWO:
      1) IP LAN shall connect Building Level Controllers (BC), Advanced Application Controller (AAC), Application Specific Controllers (ASC)

c. TIER THREE:

1) IP LAN shall connect Application Specific Controllers (ASC) and Network Sensors/devices.

2. ANSI/ASHRAE BACnet® Standard 135:

a. ANSI/ASHRAE BACnet® Standard 135 protocol shall be sole and native protocol used throughout entire DDC system.

3. HARD-WIRED NETWORK:

a. The networks shall utilize only copper and optical fiber communication media as appropriate and shall comply with applicable codes, ordinances, and regulations.

b. A single TCP/IP connections and Internet Services shall be provided by the owner.

c. Wireless communications networks of are not acceptable.

4. INTEGRATION GATEWAYS:

a. Gateways shall not be used except to integrate third party HVAC equipment and other integrated building systems and equipment.

b. Networks integration of portions of the Building Management System may use an Open implementation of network devices and technology complying with Modbus Application Protocol Specification V1.1b.

C. NETWORK COMMUNICATIONS PROTOCOL:

1. IP Network communication protocol(s) used throughout entire Building Management System and shall be open and available to other companies for use in making future modifications to DDC system.

2. The Honeywell WEBs-N4 Niagara DDC Controllers shall reside on the BACnet® communications network.

D. PEER-TO-PEER:

1. All components and controllers supplied under this contract shall be true "peer-to-peer" communication devices.

2. Direct Digital Controllers requiring "polling", (i.e. token passing) by a host to pass data *shall not be* acceptable.

E. OPEN GRAPHIC OBJECT-ORIENTED TECHNOLOGY (OOT):

1. The software shall employ object-oriented technology (OOT) for representation of all data and control devices within the system.

F. DEDICATED BMS IP NETWORK:

1. The Building Management System (BMS) shall consist of dedicated and separated IP networks that are not shared with other building systems communication networks.

G. TRANSPARENCY:

1. The number of LANs and associated communication shall be transparent to the Operator.
2. All I/O points residing on any LAN shall be capable of global sharing between LANs.

H. HTML5:

1. The supplied system shall incorporate the ability to access all data using HTML5 enabled browsers without requiring proprietary operator interface and configuration programs or browser plug-ins. An Open Database Connectivity (ODBC) or Structured Query Language (SQL) compliant server database is required for all system database parameter storage. This data shall reside on:

I. OPEN DATABASE:

1. Building Management Systems (BMS) which require proprietary databases, user interface or graphic generation programs *shall not be* acceptable.

J. OPEN DATABASE CONNECTIVITY:

1. An Open Database Connectivity (ODBC) or Structured Query Language (SQL) server database is required for all data storage.
2. The Building Management System shall incorporate the ability to access all data using HTML5 enabled browsers without requiring proprietary interface, programs, or browser plugins.
3. Any Building Management System which provides or requires a proprietary database or user interface program *shall not be* acceptable.

K. CONTROLLER INDEPENDENCE:

1. The Building Management System (BMS) design shall eliminate dependence on any single device for alarm reporting and control execution. Each Niagara 4 DDC controller shall operate independently, performing its' own control, alarm management and historical data collection.

L. COMPONENTS:

1. The Building Management System shall consist of the following:
   a. System Network Controllers(s)(SNC)
   b. Graphical User Interface(s)(GUI)

c. Building Level Controllers (BC)

d. Input/Output Module(s)(IOM)

e. Network communications equipment

f. Other components required for a complete and working Building Management System.

M. MODULARITY:

1. The Building Management system's (BMS) architecture shall be modular and shall:

a. Have inherent ability to expand to not less than two times system size indicated with no impact to performance indicated.

b. Permit expansion of both capacity and functionality through the addition of sensors, actuators, controllers, and operator devices.

N. RESPONSE TIME:

1. Maximum acceptable response time from any alarm occurrence (at the point of origin) to the point of annunciation shall not exceed 5 seconds for network connected user interfaces.

2. Maximum acceptable response time from any alarm occurrence (at the point of origin) to the point of annunciation shall not exceed 60 seconds for remote connected user interfaces.

O. THIRD PARTY EQUIPMENT INTEGRATION

1. PHYSICAL HARDWIRED INTERFACE:

a. Analog and digital signal values shall be passed from one system to another via hardwired connections.

b. There shall be one separate physical point on each system for each point to be integrated between the systems.

2. OPEN COMMUNICATIONS PROTOCOL INTEGRATION:

a. The connection of any integrated equipment shall be BACnet® MS/TP or BACnet® IP.

b. The neutral protocol used between systems shall be BACnet® over Ethernet and comply with the ASHRAE BACnet® standard 135.

c. The Original Equipment Manufacturer (OEM) shall provide a complete Protocol Implementation Conformance Statement (PICS) for all BACnet system devices.

d. The ability to command, share point object data, change of state (COS) data and schedules between the host and BACnet® systems shall be provided.

e. The Building Management System contractor shall integrate real time data from building systems by other trades and databases originating from other trades as specified and required by the Contract Documents.

f. The systems shall include necessary hardware, equipment , and software to integrate via an Open communications protocol between the various equipment systems supplied by other construction trades.

g. The OEM manufacturers providing their own controls on the associated equipment shall, at their expense, provide their necessary hardware, software and fully cooperate with the Building Management System contractor (BMSC) in a timely manner to ensure a complete and functional integration.

P. CURRENT NIAGARA OS VERSION:

1. The BMS Manufacturer shall guarantee the released Niagara OS version is fully tested and supported on their DDC controllers using a documented Software Inter-operability Testing plan. This shall guarantee end-user is purchasing a system which is fully supported and warrantied by manufacturer and shall be provided upon request of the A-E.

2.4 EMBEDDED WEB-BASED GRAPHICS

A. OPERATOR WORKSTATION (OWS) AND THIN CLIENT STATIONS (TCS):

1. The Web Browser Interface shall have the current version of Microsoft Windows, Firefox, and Chrome browsers, and as well as non-Window operating systems.
2. The OWS shall have a valid connection to the Building Management System Tier 1 network via an LAN &/or WAN ethernet network and shall have an Open System web-browser (i.e., Explorer/Firefox/Chrome) and shall not require installation of any custom software on the thin-client or workstation.

B. OPEN WEB-BROWSER GRAPHICAL INTERFACE (GUI):

1. An Open web-browser shall interface with the embedded web-graphics via the Building Management System Tier 1 Ethernet and shall be accessed using a web browser over the “Owner’s” intranet and/or remotely over the Internet .
2. The Building Management System Contractor (BMSC) shall provide a web-based graphics designed using Open web technology standards.
3. Web-browser Interface to the system embedded web-graphics shall be supported by Windows 7, 8.1, Server 12 operating system platforms, as a minimum.

C. AUTONOMOUS WEB-BROWSER AND OPERATING SYSTEM:

1. The embedded web-interface shall be browser and operating system independent.
2. Specifically supporting HTML5 enabled browsers without requiring proprietary operator interfaces, applets, configuration programs or browser plug-ins installed on the thin-client workstation.

D. SYSTEM SECURITY - SECURE SOCKET LAYERS (SSL):

1. Communications between the web-browser and embedded Building Management System graphics shall offer encryption using 128-bit encryption technology within Secure Socket Layers (SSL) through public domain Open protocols such as Hyper-Text Transfer Protocol (HTTP).

2.5 NETWORK DEVICES

A. ARCHIVAL DATA SERVER (ADS):

1. Processor: Intel Xeon CPU, compatible with quad core processors.
2. Memory: Capacity: 2x16 GB.
   a. Speed and Type: DDR4 1800 MHz
   b. Expandable Capacity: 64 GB
3. Hard Drives: (2) 4 TB RAID enabled
   a. Min Seek Time: <10ms.
   b. Cache Buffer Size: 256K.
   c. MTBF 100,000 power-on hours.
4. Backup BD/RW Drive: (1) Drive
   a. Data buffer. 2 MB
   b. Average access time 150 ms or less.
   c. MTBF 100,000 power-on hours.
5. Graphical Card: 1920 x 1080 pixels at 60 Hz.
6. Network Card: (1) 100/1000 Mb TCP/IP adapter.
7. Ports: (4) 2.0 USB (2) 3.0 USB
8. Interface accessories:
   a. Wireless 101 enhanced Keyboard, Full upper- and lowercase ASCII keyset, numeric keypad, and 12 programmable function keys.
   b. Wireless 3 Button Mouse, w scroll wheel, Optical.

B. THIN CLIENT WEB STATIONS (TCWS):

1. The “Owner” shall provide any desired Thin Client Stations (TCS)(Web-Browsers).

2. The Thin Client Stations (TCS) shall be general purpose and commercially available, with sufficient memory and processor capacity to perform all functions described in this specification.
3. The Thin Client Stations (TCS) shall allow for command entry, information management, network alarm management, and database management functions.
4. A current released open browser (Explorer/Firefox/Chrome) shall only be required as the GUI and a valid connection to the server network.
5. No installation of any custom or special software shall be required to be installed to access the Building Management System via a web browser.
6. Local and Remote interface shall be from a Web Browser and the Building Management System shall be over a TCP/IP LAN or WAN connection and offer encryption using 128 bit encryption within Secure Socket Layers (SSL).
7. Communication protocol shall be Hyper Text Transfer Protocol (HTTP). The Thin Client Web stations shall include the following components:
   a. No special software shall be required on the TCSW(s) to access the BMS.
   b. Processor, Memory, and Hard Drive capacities: As desired by owner.
   c. OS Software: Latest release Windows 64-bit version.
   d. Graphical Display: Video card & monitor 1024 x 768 resolution
   e. Video Card: 1 GB DDR5 memory
   f. Network Support: 100/1000 Mb TCP/IP adapter.

C. WEB ENABLED APPLIANCES:

1. The Building Management System (BMS) thin client architecture shall take advantage of the web-browsers built into web appliances.
2. The Building Management System Contractor (BMSC) shall include the capability for connection to the Building Management System (BMS) from the following components, as a minimum:
   a. Web-Tablets
   b. Smart-Phones

D. ROUTER AND SWITCHES (10/100/1000 MBPS):

1. The Building Management System network router/switches shall connect directly to the architecture using standard TCP/IP protocol at a minimum of 10/100/1000 mbps and shall provide communication connections between individual SNCs, Servers, OWS and other TCP/IP networked devices.
2. Manufacturers:
   a. Cisco

b. Engineer approved equal

2.6 SYSTEM IP NETWORK CONTROLLERS

A. JACE NETWORK CONTROLLER (JNC) – HON-9000

1. BASIS OF DESIGN: Niagara 4 HON-9000
2. SYSTEM FUNCTION: The Jace Network Controller (JNC) is designed to:
   a. Manage communications between and with the BMS networked controllers which are connected to its communications trunks or directly on the IP network
      1) Operator workstations (OWS)
      2) JACE network controllers (JNC)
      3) System Network Controller (SNC)
      4) Programmable IP Control Units (PICU)
      5) Programmable Plant Control Units (PPCU)
      6) Unitary IP Control Unit (UICU)
      7) Programmable IP Control Unit (NPICU)
      8) Advanced Unitary Controllers (AUC)
      9) Advanced VAV Controller (AVC),
      10) BACnet® Touchscreen Communication Thermostats (BCT)
   b. Perform control and operating strategies for the system based on information from any controller connected to the BMS.
3. SECURED DEVICE:
   a. The JNC shall be an IEC 62443-4-2-SL2 Certified Component.
4. OPEN PROTOCOLS: The JNC shall be enabled to support and shall be licensed with the following Open protocol drivers (client and server) by default:
   a. BACnet®
   b. BACnet® /SC (when running Niagara N4.12u2 or higher)
   c. Lon
   d. MODBUS
   e. Data export via native MQTT
5. PEER-TO-PEER:
   a. The JNCs shall be capable of peer-to-peer communications with other JNC's, SNCs, PICUs, PPCUs, UICUs, and with any OWS connected to the BAS, whether the OWS is directly connected, connected via cellular modem, or connected via the Internet.

b. The communication protocols utilized for peer-to-peer communications between JNCs, SNCs, PICUs, PPCUs, and UICUs will be Niagara 4 FoxS, BACnet® TCP/IP and SNMP.

c. Use of a proprietary communication protocol for peer-to-peer communications between, JNCs, SNCs, PICUs, PPCUs, and UICUs is not allowed.

6. COMMUNICATIONS CONFIGURATION:

a. The SNC controller shall be capable of deployment in an IP ring topology with integrated fail-safe utilizing Rapid Spanning Tree Protocol (RSTP) 802.1w.

b. RSTP must be able to accommodate up to 40 controllers.

c. The SNC controller shall be networked with Cat 5e or Cat6 cable at a maximum length of 100 meters between controllers.

7. HARDWARE FEATURES: The JNC shall provide the following hardware features as a minimum:

a. Two 10/100/1000 Mbps Ethernet ports.

b. Two Isolated RS-485 ports with biasing switches.

c. Add-on communication modules to meet the requirement *shall not be* allowed.

d. 2 GB Low Power Double Data Rate RAM (LPDDR4).

e. 8 GB Removable micro-SD card.

f. i.MX 8M Plus, quad Arm® Cortex®-A53 processor, 1.2 GHz.

g. Real-Time Clock Timekeeping

h. Wi-Fi (Client or WAP) – only available for wireless model

1) Wi-Fi (802.11ac)

2) 1x1 802.11 a/b/g/n/ac

3) Configurable radio (Off, WAP, or Client)

4) WPAPSK/WPA2PSK supported

i. Integrated 24 VAC/DC Power Supply

j. Battery less

k. Secure boot

l. Ambient Operating Temperature: - 4 ° to 140 ° F

m. Integrated 24 VAC / DC Global Power Supply

8. POINT EXPANSION: The JNC shall employ a point count capacity license model that supports expansion capabilities.

9. I/O DEVICE EXPANSION:

a. The JNC shall be support expansion with the following DIN rail mountable Expansion IO Module types, limited to a maximum of sixteen 16:

b. High Speed Field Bus Expansion supporting a minimum of 64 IO Modules on single bus, limited to maximum of 16 of each type of 16 IO Module, with a maximum of 896 IO points.

c. The Panel Bus Scan Time shall not exceed 1 second when fully loaded IO modules

d. EXPANSION ADAPTER:

1) A Wiring Adapter shall be available to extend Power and Communication Bus to a separate DIN rail of Expansion IO Modules.

e. WIRE QUICK CONNECTIONS:

1) Power and Communication Bus shall be transferred to the Expansion IO Modules by Touchflake connections enabling quick installation.

f. ANALOG INPUT RESOLUTION

1) Analog Inputs shall be 16 Bit resolution.

g. VOLTAGE INPUT:

1) 0-10Vdc, 2-10Vdc (Direct/Reverse).
2) Custom characteristic available in the tool.
3) Minimum resolution of 0.01 volts.
4) ± 0.4% of FSR (Full Scale Range).

h. CURRENT INPUT:

1) 0-20mA, 4-20mA, 0-10mA, 4-10mA (Direct/Reverse).
2) Custom characteristic available in the tool.
3) ± 0.5% of FSR (Full Scale Range).

i. THERMISTOR INPUT:

1) 0-1M ohm.
2) Custom characteristic available in the tool.
3) <= 1% of accuracy.

j. OPERATING VOLTAGE:

1) 19–29 Vac (50/60Hz) or 19-29 Vdc.
2) Protected against overvoltage's of max. 29 Vac or 40 Vdc.
3) Terminals protected against short-circuiting.

k. AMBIENT OPERATING TEMPERATURE: Range of - 40 to 150 °F.

l. AMBIENT OPERATING HUMIDITY: 5 to 95% RH (non-condensing).

m. VISUAL INDICATORS:

1) The SNC shall include LED for each I/O point (Off, Green, Yellow, Red).
2) The SNC shall include Service LED, RS485 LED, Ring LED, Service reset button, Auto Button (HOA Modules only), Rotary Dial (HOA Modules only).

10. BACKUP/RESTORATION:

a. The JNC shall have a backup and restore function utilizing available USB-C port without the need of software engineering workbench.

11. EMBEDDED PROGRAMMING SOFTWARE:
    a. The JNC shall be fully programmable to meet the unique requirements of the facility it shall control, including Analytic calculations and have Embedded Programming software and "Setup Wizards" for all Niagara DDC controllers.
    b. Engineering tools that are required to “tunnel” *shall not be* allowed.

12. STANDARD PROGRAMS
    a. The JNC shall be capable of executing application control programs to provide:
        1) Calendar functions.
        2) Scheduling.
        3) Trending.
        4) Alarm monitoring and routing.
        5) Time synchronization.
        6) Integration of LonWorks, BACnet®, and MODBUS controller data.
        7) Network management functions for all JNC, SNC, PICU, PPCU, UICU, NPICU, AUC, AVC, and BCT based devices.

13. ANALYTICS, FAULT DETECTION AND DIAGNOSTICS
    a. The JNC shall be capable of Analytics for fault detection and diagnostics, including 25 Niagara N4 Analytic Points and sub-system alarm suppression.

14. SIMULATENEOUS CLIENTS:
    a. The JNC shall support a minimum of 16 simultaneous clients connected through a standard Web browser access via the Intranet/Internet.

15. ALARMING
    a. The JNC shall provide alarm recognition, storage, routing, management, and analysis to supplement distributed capabilities of equipment or application specific controllers.
    b. The JNC shall be able to route any alarm condition to any defined user location whether connected to a local network or remote via cellular modem, or wide-area network.
    c. Alarm generation shall be selectable for annunciation type and acknowledgement requirements including but not limited to:
        1) Alarm.
        2) Return to normal.
        3) To default.

d. Alarms shall be annunciated in any of the following manners as defined by the user:
   1) Screen message text.
   2) Email of complete alarm message to multiple recipients.
   3) Pagers via paging services that initiate a page on receipt of email message.
   4) Graphics with flashing alarm object(s).

e. The following shall be recorded by the SNC for each alarm (at a minimum):
   1) Time and date.
   2) Equipment (air handler #, access way, etc.).
   3) Acknowledge time, date, and user who issued acknowledgement.

16. SECUIRTY
   a. The JNC shall support the following security functions.
      1) Module code signing to verify the author of programming tool and confirm that the code has not been altered or corrupted.
      2) Role-Based Access Control (RBAC) for managing user roles and permissions.
      3) Require clients to use strong credentials.
      4) Data in Motion and Sensitive Data at Rest be encrypted.
      5) LDAP and Kerberos integration of access management.

17. MODEL STRUCTURES
   a. The JNC shall support the following data modeling structures to utilize Search; Hierarchy; Template; and Permission functionality:
      1) Metadata: Descriptive tags to define the structure of properties.
      2) Tagging: Process to apply metadata to components
      3) Tag Dictionary

18. TEMPLATES:
   a. The JNC shall employ template functionality.
   b. Templates are a containerized set of configured data tags, graphics, histories, alarms... that are set to be deployed as a unit based upon manufacturer's controller and relationships.
   c. All lower level Niagara DDC controllers (PICU, PPCU, UICU, NPICU, AUC, AVC, BCT) shall have an associated template file for reuse on future project additions.

19. SOFTWARE MAINTENANCE:
   a. The JNC shall be provided with an 2-year Hardware Warranty and a 5 Year Software Maintenance license.
   b. Labor to implement upgrades during the 5-year SMA period not included.

B. PROGRAMMABLE PLANT CONTROL UNIT (PPCU)

1. BASIS: Honeywell CIPer 50
2. SYSTEM FUNCTION:
   a. HVAC PPCU controllers shall be fully programmable to meet the unique requirements of the facility it shall control.
   b. The controller platform shall provide options and advanced system functions, programmable and configurable using Niagara 4 Framework™, that allow standard and customizable control solutions required in executing the "Sequence of Operation". Each PPCU shall include the Niagara Security Dashboard.
3. OPEN PROTOCOLS:
   a. The communication protocols utilized for peer-to-peer communications between NPICUs will be Niagara 4 FoxS or BACnet® TCP/IP.
   b. The use of a proprietary communication protocol for peer-to-peer communications between NPICU's is not allowed.
   c. BACnet®: The control of the equipment shall be accomplished using a BACnet® direct digital control devices with BTL listed PICS.
   d. LonMark: The control of the equipment shall be accomplished using LonMark direct digital controlled devices which utilize a LonMark profile application. Where LonMark profile application devices are not available for a particular application, devices networked on LonWorks shall be acceptable.
4. NETWORK PROFILE:
   a. PPCU shall meet the BACnet® Building Controller (B-BC) Profile.
5. PICU CONTROLLER APPLICATIONS:
   a. Application of the PICU controller include the following equipment:
      1) Central Plant Controls (BC)
      2) Air Handling Units - Constant Volume (BC)
      3) Air Handling Units - Variable Volume (BC)
      4) Roof Top Units – Packaged (BC)
6. CONNECTIVITY:
   a. The PPCU controllers shall be capable of either integrating with other devices or standalone control operation.
7. COMMUNICATIONS CONFIGURATION:
   a. The communication protocols utilized for peer-to-peer communications between PPCU's will be Niagara 4 FoxS or BACnet® TCP/IP. Use of a proprietary

communication protocol for peer-to-peer communications between PPCU's is not allowed.

8. PEER-TO-PEER:
   a. The PPCU controllers shall be capable of daisy-chain IP communications with other PPCU’s and peer-to-peer communications with SNC's and with any OWS connected to the BAS, whether the OWS is directly connected, connected via cellular modem, or connected via the Internet.

9. HARDWARE FEATURES:
   a. The PPCU shall provide the following hardware features as a minimum:
      1) Two10/100 Mbps Ethernet ports.
      2) Two RS-485 ports, one isolated and one non-isolated, with biasing switches.
      3) ARM 9 32-bit processor, 1 GHz.
      4) 1 GB RAM.
      5) 512 KB MRAM.
      6) 4 GB Flash Memory.
      7) Two USB 2.0 ports.
      8) One HMI port to connect onboard or remote HMI.
      9) Integrated 24 VAC / DC Global Power Supply.
      10) Real Time Clock.
   b. ENVIRONMENTAL RATINGS:
      1) The PPCU controller Environmental shall be rated for 0 to 122 ° F Ambient Operating Temperature.

10. EXPANSION:
   a. The PPCU shall be licensed and enabled to support four (4) devices, expandable to forty-nine (49) and shall be licensed with the following Open protocol drivers by default:
   b. BACnet® (MS/TP and IP [ISO 16484-5]).
   c. LonTalk (ISO 14908).
   d. Modbus (RTU and TCP).

11. BASE/EXPANSION:
   a. The PPCU shall employ a device count capacity license model that supports I/O expansion capabilities.
   b. Each PPCU shall have expansion ability to support additional I/O requirements through the use of remote input/output modules and a local communication bus. Each PPCU shall be able to support a maximum of 2,000+ physical I/O points.

c. I/O-specific modules (UI, BI, AO, BO) shall require a Terminal Socket Module that includes screw or push-in terminals for field device wires, communication, and port to accept pluggable I/O-specific Module. I/O-specific Modules shall be hot pluggable and shall be replaceable without rewiring.

d. Remote Universal Input Module (8 UI).
   1) Eight Universal Inputs; 0/2-10 V, 0/4-20 mA, 20 K NTC, 10 K NTC, PT1000-1, PT1000-2, NI1000TK5000, PT3000, BALCO500, Binary Input (0 / 10 V with pull-up).

e. Remote Binary Input Module (12 BI).
   1) Twelve Binary Inputs; Dry contact or Totalizer (20 Hz).
   2) Each Binary Input shall include a configurable status LED (Alarm: red/green; Status: yellow/off).

f. Remote Analog Output Module (8 AO).
   1) Eight Analog Outputs with configurable safety position selections. 8 Bit Analog Outputs; 0-10 V, Floating Actuator, Binary Output (0 V / 10 V).
   2) Each Analog Output shall include a RED status LED that varies brightness based on signal level & flashes in override mode (with manual override Module).
   3) Optional version with manual override potentiometer per output.

g. Remote Relay Output Module (6 BO).
   1) Six Relay Outputs with configurable safety position selections.
   2) Each Relay Output shall include a yellow status LED.
   3) Optional version with manual override switch per output (Auto, 0, 1).

h. Remote Floating Output Module (3 FO).
   1) Three Floating Outputs with configurable safety position selections. 2 Relays per Floating Output.
   2) Each Floating Output shall include a RED status LED (opening) and a GREEN status LED (closing).
   3) Manual override potentiometer per output.

i. Remote Mixed I/O Module (8 UI, 12 BI, 8 AO, 6 BO).
   1) Eight Universal Inputs; 0/2-10 V, 20 K NTC, Binary Input (dry contact).
   2) Twelve Binary Inputs; Dry contact or Totalizer (15 Hz).
      a) Each Binary Input shall include a yellow status LED.
   3) Eight Analog Outputs with configurable safety position selections. 10 Bit Analog Outputs; 0-10 V, Binary Output (0 V / 10 V).
   4) Six Relay Outputs.
      a) Each Relay Output shall include a yellow status LED.

12. INPUT/OUTPUT POINTS:
    a. The following twenty-six [26] integral Inputs/Outputs shall be supported per each PPCU:
        1) Six integral 12 Bit resolution Universal Inputs (configurable as 20K NTC, 10K NTC, 0/2-10 V, 0/4-20 mA, 0.4 Hz Dry Contact).
        2) Four integral dry contact / totalizer Digital Inputs. Totalizer: 15 Hz (25 ms on, 25 ms off, 5 ms bounce).
        3) Four integral 8 Bit 0-10 VDC Analog Outputs with configurable safety position selections.
        4) Eight integral Digital Outputs.
        5) Four Relay normally open contact at 3 A, 250 VAC, 30 VDC.
            a) One Relay normally open contact at 10 A, 250 VAC, 30 VDC with configurable safety position selections.
            b) Three Relay normally open contact with common feed at 3 A, 250 VAC, 30 VDC with configurable safety position selections.

13. COMM INDICATION:
    a. The PPCU shall provide LED indication of communication and controller performance to the technician, without cover removal.

14. INTERFACE:
    a. The PPCU shall support standard Web browser access via the Intranet/Internet.

15. PROGRAMABILITY:
    a. All PPCU controllers shall be application programmable and shall always maintain their certification. All control sequences within or programmed into the PPCU shall be stored in non-volatile memory, which is not dependent upon the presence of a battery to be retained.

16. PROGRAMMING:
    a. Programming software shall be embedded into the PPCU. The PPCU shall not require any external configuration tool or programming tool. All configuration and programming tasks shall be accomplished and accessible from within the embedded Niagara 4 environment.
    b. The PPCU shall be capable of executing application control programs to provide:
        1) Calendar functions.
        2) Scheduling.
        3) Trending.
        4) Alarm monitoring and routing.
        5) Time synchronization.

6) Integration of all daisy-chain PPCU's.
7) Network management functions for all daisy-chain PPCU's.
8) Analytics for BMS fault detection and diagnostics, including sub-system alarm suppression as described in ASHRAE Guideline 36-2021.

17. PROGRAMS:
    a. PPCU controllers shall support at minimum the following control techniques:
        1) General-purpose control loops that can incorporate Demand Limit Control strategies, set point reset, adaptive intelligent recovery, and time of day bypass.
        2) General-purpose, non-linear control loops.
        3) Start / stop Loops.
        4) If / Then / Else logic loops.
        5) Math Function loops (MIN, MAX, AVG, SUM, SUB, SQRT, MUL, DIV, ENTHALPY).
        6) Analytic calculations.

18. SOFTWARE MAINTENANCE:
    a. The PPCU shall be provided with a Base license utilizing a lifetime "Edge" structure. License can be upgraded to additional functionality and shall include a 5 Year Software Maintenance license if executed.
    b. Labor to implement not included.

19. INTERFACING:
    a. The PPCU shall be provided with an integrated Local Operator Interface.
    b. Local Operator Interface shall allow User-ID and password protected access.
    c. Local Operator Interface shall provide a backlit display, with automatic backlight time-out.
    d. The display backlight shall automatically light upon press of a key or operation of the push & turn wheel. The display backlight will extinguish if operating keys or push & turn wheel is not used for two minutes.
    e. Local Operator Interface shall provide a full display of long text information.
    f. Automatic left and right scrolling shall ensure that text information longer than the display width can be viewed.
    g. Local Operator Interface shall provide configurable screens for viewing and adjusting data points and parameters, including the following operations.
        1) Automatics and visual notification of all critical alarms.
        2) Read and write access to all data points.

3) Full length names of data points, schedules, calendars, parameters, alarm texts, state texts and alarms.
4) Read and write access to all application parameters.
5) Read and write access to all schedules and calendars.
6) Read access to the onboard alarm buffer.
7) Overview of all data points in manual override.
8) Overview of all data points in alarm.

h. Local Operator Interface shall allow user access to text information via a push & turn operation wheel.
1) Scrolling through a list of information shall be accomplished by turning the operation wheel.
2) Selecting and acknowledging information shall be accomplished by pushing the operation wheel.
3) Changing information shall be accomplished by turning the operation wheel.

20. SYSTEM ALARMING:
a. The PPCU shall be able to route any alarm condition to any defined user location whether connected to a local network or remote via cellular modem, or wide-area network.
b. Alarm generation shall be selectable for annunciation type and acknowledgement requirements including but not limited to:
1) Alarm.
2) Return to normal.
3) To default.
c. Alarms shall be annunciated in any of the following manners as defined by the user:
1) Screen message text.
2) Email of complete alarm message to multiple recipients.
3) Pagers via paging services that initiate a page on receipt of email message.
4) Graphics with flashing alarm object(s).
d. The following shall be recorded by the PPCU for each alarm (at a minimum):
1) Time and date.
2) Equipment (air handler #, access way, etc.).
3) Acknowledge time, date, and user who issued acknowledgement.

21. SECURITY:
a. The PPCU shall support the following security functions:
1) Module code signing to verify the author of programming tool and confirm that the code has not been altered or corrupted.

2) Role-Based Access Control (RBAC) for managing user roles and permissions.
3) Require clients to use strong credentials.
4) Data in Motion and Sensitive Data at Rest be encrypted.

2.7 OUTPUT CONTROLLED DEVICES

A. PILOT RELAYS (R):

1. Pilot Control relays shall provide either momentary or maintained switching action as appropriate for the application.
2. Relay contact configuration, amp, voltage, and coil ratings shall be suitable for application. All control relays shall be labeled with UR symbol and UL listed.
3. All panel mounted control relays shall be plugged in type with an interchangeable module (Ice Cube); mounted on a subbase and wired to numbered terminals strips; be DPDT with indicating lamp.
4. Remote mounted pilot control relays (outside of the panel) shall be enclosed in a NEMA enclosure suitable for the location.
5. RIB style relays shall be acceptable for remote control.
6. Relays shall be heavy duty and rated for at least 10 A at 250-V ac and 60 Hz.
7. Relays shall be either double pole double throw (DPDT) or three-pole double throw, depending on the control application.
8. Use a plug-in-style relay with an eight-pin octal plug for DPDT relays and an 11-pin octal plug for three-pole double-throw relays.
9. Construct the contacts of either silver cadmium oxide or gold.
10. Enclose the relay in a clear transparent polycarbonate dust-tight cover.
11. Relays shall have LED indication and a manual reset and push-to-test button.
12. Performance:
    a. Mechanical Life: At least 10 million cycles.
    b. Electrical Life: At least 100,000 cycles at rated load.
    c. Pickup Time: 15 ms or less.
    d. Dropout Time: 10 ms or less.
    e. Pull-in Voltage: 85 percent of rated voltage.
    f. Dropout Voltage: 50 percent of nominal rated voltage.
    g. Power Consumption: 2 VA.
    h. Ambient Operating Temperatures: Minus 40 to 115 deg F.
13. Equip relays with coil transient suppression to limit transients to non-damaging levels.

14. Plug each relay into an industry-standard, 35-mm DIN rail socket. Plug all relays located in control panels into sockets that are mounted on a DIN rail.
15. Relay socket shall have screw terminals. Mold into the socket the coincident screw terminal numbers and associated octal pin numbers.
16. Acceptable Manufacturers:
    a. Functional Devices
    b. Veris
    c. IDEC
    d. Engineer approved equal.

2.8 SYSTEM INTEGRATIONS:

2.9 ANCILLIARY SYSTEM COMPONENTS

A. ENCLOSURES AND LOCAL CONTROL PANELS:

1. RATINGS:
    a. All enclosures shall be rated for the mounted environment in which they are located..
    b. Unless otherwise shown, all indoor control enclosure cabinets shall be fully enclosed NEMA 1 steel construction, with a baked enamel finish.

2. FEATURES:
    a. Low and line voltage wiring shall be segregated.
    b. All control panels shall be factory constructed, incorporating the Building Management System manufacturer's standard designs and layouts.
    c. All control panels shall be UL inspected and listed as an assembly and carries a UL 508 label listing compliance.
    d. Control panels shall consist of the
        1) A perforated sub-panel
        2) A hinged door and or key lock latch shall be provided for non-unitary equipment. A single key shall be common to all control panels.
        3) A convenience 120 VAC duplex receptacle
        4) A fused on/off power switch with over current protection for control power sources.
        5) Properly sized transformers.
        6) BACnet® DDC controller(s)
        7) Display module, where specified and indicated on the plans, shall be flush mounted in the panel face unless otherwise noted.

8) I/O devices i.e., relays, transducers, etc.. which are not required to be located externally. All I/O connections on the BACnet® DDC controller shall be to fixed screw terminals.

9) Terminals connections shall be UL listed for 300 volt service, individually identified per control/ interlock drawings, with adequate clearance for field wiring.

10) Interconnections between internal and face mounted devices shall be prewired with color coded stranded conductors neatly installed in plastic troughs and/or tie wrapped.

11) All wiring shall be neatly installed in plastic trays or tie wrapped.

3. ACCEPTABLE MANUFACTURERS

a. Honeywell Controls

b. or pre-approved equal.

B. CONTROL WIRE AND CABLE:

1. DESCRIPTION:

a. Provide copper wiring, plenum cable, and raceways as specified in the applicable sections of Division 26 unless otherwise noted herein.

b. All insulated wire to be copper conductors, UL labeled for 90 ° C minimum service. Electronic and fiber optic cables for control wiring are specified in Electrical Section "Voice and Data Communication Cabling."

2. LAN AND COMMUNICATION IP COMMUNICATION WIRING:

a. Ethernet Cable shall be minimum CAT5e minimum.

b. Secondary level network shall be 24 gage, TSP, low capacitance cable.

c. Comply with DDC system manufacturer requirements for network being installed.

d. Cable shall be plenum rated.

e. Cable shall comply with NFPA 70.

f. Cable shall have a unique color that is different from other cables used on Project.

g. Copper Cable for Ethernet Network:

1) 100BASE-TX, 1000BASE-T, or 1000BASE-TX.

2) TIA/EIA 586, Category 5e or Category 6.

3) Minimum No. 22 AWG solid.

4) Shielded Twisted Pair (STP)

5) Thermoplastic insulated conductors, enclosed in a thermoplastic outer jacket, Class CMP as plenum rated.

3. COMMUNICATION AND CONTROL WIRING:

a. Wire Sizing and Insulation shall comply with minimum wire size and insulation based on services listed below:

b. Service Minimum Gage/Type Insulation Class

1)	AC 24 VAC	Power 12 Ga Solid	600 Volt
2)	DC 24 VDC	Power 10 Ga Solid	600 Volt
3)	Class 1	14 Ga Stranded	600 Volt
4)	Class 2	18 Ga Stranded	300 Volt
5)	Class 3	18 Ga Stranded	300 Volt

c. Open plenum rated cable is permitted in supply or return air plenum where allowed.

4. POWER WIRING:
   a. 115 VAC power circuit wiring > 100 feet distance shall use minimum 10 gage.
   b. 24 VAC control power wiring > 200 feet distance shall use minimum 12 gage.

5. CONTROL WIRING:
   a. Digital Input/Output wiring shall use Class 2 twisted pair, insulated.
   b. Analog inputs shall use Class 2 twisted shielded pair, insulated, and jacketed and require a grounded shield.

6. WIRE: SINGLE CONDUCTOR CONTROL WIRING ABOVE 24 V.
   a. Wire size shall be at least No. 18 AWG.
   b. Conductor shall be 7/24 soft annealed copper strand with 2- to 2.5-inch lay.
   c. Conductor insulation shall be 600 V, Type THWN or Type THHN, and 90 deg C according to UL 83.
   d. Conductor colors shall be black (hot), white (neutral), and green (ground).

7. SINGLE TWISTED SHIELDED INSTRUMENTATION CABLE ABOVE 24 V:
   a. Wire size shall be a minimum No. 18 AWG.
   b. Conductors shall be a twisted, 7/24 soft annealed copper strand with a 2- to 2.5-inch lay.
   c. Conductor insulation shall have a Type THHN/THWN or Type TFN rating.
   d. Shielding shall be 100 percent type, 0.35/0.5-mil aluminum/Mylar tape, helically applied with 25 percent overlap, and aluminum side in with tinned copper drain wire.
   e. Outer jacket insulation shall have a 600-V, 90-deg C rating and shall be Type TC cable.
   f. For twisted pair, conductor colors shall be black and white.
   g. For twisted triad, conductor colors shall be black, red, and white.

8. SINGLE TWISTED SHIELDED INSTRUMENTATION CABLE 24 V AND LESS:

a. Wire size shall be a minimum No. 18 AWG.

b. Conductors shall be a twisted, 7/24 soft annealed copper strand with a 2- to 2.5-inch lay.

c. Conductor insulation shall have a nominal 15-mil thickness, constructed from flame-retardant PVC.

d. Shielding shall be 100 percent type, 1.35-mil aluminum/polymer tape, helically applied with 25 percent overlap, and aluminum side in with tinned copper drain wire.

e. Outer jacket insulation shall have a 300-V, 105-deg C rating and shall be Type PLTC cable.

f. For twisted pair, conductor colors shall be black and white.

g. For twisted triad, conductor colors shall be black, red, and white.

9. APPROVED CABLE MANUFACTURERS:

a. Anixter

b. Belden

C. CONDUITS AND RACEWAYS

1. RELATED SECTION SPECIFIED ELSEWHERE:

a. Comply with requirements in Section 26 05 19 "Low-Voltage Electrical Power Conductors and Cables" electrical power conductors and cables.

b. Comply with requirements in Section 26 05 33 "Raceways and Boxes for Electrical Systems" for electrical power raceways and boxes.

PART 3 - EXECUTION

3.1 OVERVIEW

A. CROSS-REFERENCE:

1. Install system and materials in accordance with manufacturer's instructions, and as detailed on the project drawing set.

B. INSTALLATION:

1. Line and low voltage electrical connections to control equipment shown specified or shown on the control diagrams shall be furnished and installed by the Building Management System Contractor (BMSC) in accordance with these specifications.

C. COORDINATION:

1. Original Equipment Manufacturer (OEM) Supplied Equipment which is typically furnished by the Mechanical Contractor (MC) and that is which normally is wired before installation shall be furnished as such.
2. Control wiring which is typically performed in the field (i.e., wall thermostats) shall be furnished and installed by the Building Management Systems Contractor (BMSC).

D. LABELING:

1. All control devices mounted on the face of control panels shall be clearly identified as to function and system served with permanently engraved phenolic labels.

3.2 BUILDING MANAGEMENT SYSTEM SPECIFIC REQUIREMENTS

A. GRAPHIC USER INTERFACE DISPLAYS

1. Provide a color graphic system flow diagram display for each system with all points as indicated on the point list.
2. All terminal unit graphic displays shall be from a standard design library.
3. Clients shall access the various system schematics via a graphical penetration scheme and/or menu selection.

B. END DEVICE ACTUATION

1. All damper and valve actuation shall be DDC electronic.
2. Controls shall be provided by the Building Management System (BMS) manufacturer as specified herein.

3.3 EXAMINATION

A. CONDITIONED POWER

1. Verify that conditioned power supply is available to the operator workstation.

B. EMERGENCY POWER

1. Verify that emergency power supply is connected to panels designated as such.

3.4 CODE COMPLIANCE

A. NEC COMPLIANCE:

1. All wiring shall be installed in accordance with all applicable electrical codes and shall comply with equipment manufacturer's recommendations. Should any discrepancy be

found between wiring specifications in this section and Electrical sections, the stricter wiring requirements shall prevail.

B. DISPOSAL:

1. All other control equipment which is removed shall be disposed of by the Building Management System Contractor (BMSC).

3.5 ELECTRICAL WIRING AND CONNECTION INSTALLATION

A. CONTROL PANEL WIRING:

1. All electrical control wiring to the control panels shall be the responsibility of the Building Management System contractor (BMSC).

B. CODE COMPLIANCE:

1. All wiring shall be in accordance with the Project Electrical Specifications (Division 26), the National Electrical Code and any applicable local codes.

C. WIRING EXPANSION:

1. Control wiring shall be of adequate length for the installation.
2. Excess wire shall not be looped or coiled in the controller cabinet.

D. PROPER INSTALLATION:

1. Read installation instructions carefully.

E. INSTALLATION DEVIATIONS:

1. Any unavoidable deviations shall be approved by owner's representative prior to installation.

F. COMPONENT INSTALLATION:

1. Install raceways, boxes, and cabinets according to Electrical Section "Raceways and Boxes."
2. Install building wire and cable according to Electrical Section "Conductors and Cables."
3. Install signal and communication cable according to Electrical Section "Voice and Data Communication Cabling."
4. Conceal cable, except in mechanical rooms and areas where other conduit and piping are exposed.
5. Install exposed cable in raceway.

6. Install concealed cable in raceway or use plenum cable installed in workmanlike fashion.
7. Bundle and harness multi-conductor instrument cable in place of single cables where several cables follow a common path.
8. Fasten flexible conductors, bridging cabinets and doors, along hinge side; protect against abrasion. Tie and support conductors.
9. Number code or color code conductors for future identification and service of control system, except local individual room control cables.
10. Install wire and cable with sufficient slack and flexible connections to allow for vibration of piping and equipment.
11. All wire shall be copper and meet the minimum wire size and insulation class listed below:

G. POWER WIRING:

1. 120 VAC circuits used for the Building Management System shall be taken from panel boards and circuit breakers provided by Division 26.
2. Building Management System power circuits shall be dedicated to the Building Management System devices and shall not be used for any other purposes.
3. Terminal unit DDC controllers may use power from the equipment power circuits.
4. All NEC Class 1 (line voltage) wiring shall be UL Listed and installed approved conduit according to NEC and Division 26 requirements.
5. Power wiring must meet NEC / Local standards; minimum 12 gauge, stranded, THHN.
6. Power and Class One wiring may be run in the same conduit.
7. Power Wiring must be in ¾ inch EMT where concealed or exposed.
8. Where different wiring classes terminate within the same enclosure, maintain clearances, and install barriers per the National Electric Code.

H. CONTROL WIRING

1. CLASS 2 WIRING:
   a. All low voltage wiring shall meet NEC Class 2 requirements. (Low voltage power circuits shall be sub fused when required to meet Class 2 current limit.).
   b. Class 2 signal wiring and 24 VAC power can be run in the same conduit.
   c. Do not install Class 2 wiring in conduit containing Class 1 wiring or tubing.
   d. Boxes and panels containing high voltage wiring and equipment may not be used for low voltage wiring except for the purpose of interfacing the two (e.g., relays and transformers).

e. Where Class 2 wires are concealed and in accessible locations, including ceiling return air plenums, approved cables not in conduit may be used provided that cables are UL Listed for the intended application.

2. INSTALLATION:

a. All control and interlock wiring shall comply with national and local electrical codes and Division 26 of this specification. Where the requirements of this section differ from those in Division 26, the requirements of this section shall take precedence.

3. Where the space above the ceiling is a supply or return air plenum, the wiring shall be plenum rated. Teflon wiring can be run without conduit above suspended ceilings.

EXCEPTION: Any wire run in suspended ceilings that is used to monitor critical life safety systems or control critical equipment shall be in conduit.

---

a. Wiring is to be run parallel along a surface or perpendicular to it and neatly tied at 10 feet intervals.

b. Control wire shall be plenum stranded #18 gauge with minimum 300 VAC insulation.

c. Input wiring shall be shielded & fire rated Teflon jacketed.

d. The Maximum pulling, tension, and bend radius for cable installation as specified by the cable manufacturer *shall not be* exceeded during installation.

e. Wires are to be kept a minimum of 3 inches from hot water, steam, or condensate piping.

f. Wire *shall not be* allowed to run across telephone equipment areas.

g. Where the wires leave the conduit system, they shall be protected by a plastic insert.

4. CABLE SUPPORT:

a. Plenum rated cable shall be supported from or anchored to structural members. Cables *shall not be* supported by or anchored to ductwork, electrical conduits, piping, or ceiling suspension systems.

5. WIRING DEVICE TERMINATIONS:

a. All wire-to-device connections shall be made at a terminal block or wire nut. All wire-to-wire connections shall be at a terminal strip or wire nut. Exposed terminations *shall not be* acceptable. Terminations shall be contained within either the device or local junction box. All wiring within enclosures shall be neatly bundled and anchored to permit access and prevent restriction to devices and terminals.

6. LABELING:

a. All communication wiring shall be labeled to indicate origination and destination data.

7. NO SPLICES:
   a. All plenum rated wiring shall be installed as continuous lengths, with no splices permitted between termination points.
   b. All wiring in conduit shall be installed as continuous lengths, with no splices permitted between termination points or junction boxes.
   c. All runs of communication wiring shall be unspliced when that length is commercially available.

8. GROUNDING:
   a. Provide for complete grounding of all applicable signal and communications cables, panels, and equipment so as to ensure system integrity of operation.
   b. When a cable enters or exits a building, a lightning arrestor must be installed between the lines and ground. The lighting arrestor shall be installed according to the manufacturer's instructions
   c. Ground cabling and conduit at the panel terminations.
   d. Avoid grounding loops.
   e. Grounding of coaxial cable shall be in accordance with NEC regulations article on "Communications Circuits, Cable, and Protector Grounding"..

I. ROOF, WALL, AND FLOOR PENETRATIONS:

1. Provide fire stopping for all penetrations used by dedicated Building Management System conduits and raceways.
2. All openings in fireproof or fire stopped components shall be closed by using approved fire resistive sealant.
3. Roof penetrations and pitch pockets shall be provided by others.
4. All wiring passing through penetrations, including walls shall be in conduit or enclosed raceway.
5. Penetrations of floor slabs shall be by core drilling.
6. All penetrations shall be plumb, true, and square.

J. IDENTIFICATION STANDARDS:

1. All nodes shall be identified by a permanent label fastened to the enclosure.
2. Labels shall be suitable for the node location.
3. Cable types specified in Item A shall be color coded for easy identification and troubleshooting.

3.6 FIELD DEVICE INSTALLATION

A. GENERAL:

1. Locate components of the Building Management System in accessible local control panels wherever possible.
2. All devices shall be installed per the device manufacturer recommendation.
3. The mechanical contractor shall install all mechanical devices i.e., control valves, dampers, temperature wells, pressure taps, airflow stations, etc....

B. ENCLOSURES:

1. The Building Management System panels and cabinets shall be located as indicated at an elevation of not less than 2 feet from the bottom edge of the panel to the finished floor. Each cabinet shall be anchored per the manufacturer's recommendations.
2. The Building Management System contractor shall be responsible for coordinating panel locations with other trades and electrical and mechanical contractors.
3. For all I/O requiring field interface devices, these devices where practical shall be mounted in a Field Interface Panel (FIP).
4. The Building Management System Contractor shall provide an enclosure, which protects the device(s) from dust, moisture, conceals integral wiring and moving parts.
5. FIPs shall contain power supplies for sensors, interface relays and contactors, and safety circuits.
6. The FIP enclosure shall be of steel construction with baked enamel finish, NEMA 1 rated with a hinged door and keyed lock.
7. The enclosure shall be sized for twenty percent spare mounting space. All locks shall be keyed identically.
8. All wiring to and from the FIP shall be to screw type terminals. Analog or communications wiring may use the FIP as a raceway without terminating.
9. The use of wire nuts within the FIP is prohibited. All outside mounted enclosures shall meet the NEMA-4 rating.
10. The wiring within all enclosures shall be run in plastic track. Wiring within controllers shall be wrapped and secured.

C. TEMPERATURE SENSORS

1. TEMPERATURE SENSOR - SPACE:
   a. Verify location of thermostats, humidistats, and other exposed control sensors with Drawings and room details before installation.
   b. Install devices 48 inches above the floor or per ADA requirements.

c. Provide lockable tamper proof covers in public areas and/or where indicated on the plans.

2. TEMPERATURE SENSOR - DUCT:
   a. Duct mount sensors shall mount in an electrical box through a hole in the duct and be positioned so as to be easily accessible for repair or replacement.
   b. The sensors shall be insertion type and constructed as a complete assembly including lock nut and mounting plate.
   c. For ductwork greater in any dimension than 48 inches or where air temperature stratification exists such as a mixed air plenum, utilize an averaging sensor.
   d. The sensor shall be mounted to suitable supports using factory approved element holders.

3. TEMPERATURE SENSOR - OUTSIDE AIR:
   a. Sensors shall be mounted on the North wall to minimize solar radiant heat impact or located in a continuous intake flow adequate to monitor outside air conditions accurately.
   b. Sensors shall be installed with a rainproof, perforated cover.

D. CONTROL RELAYS:

1. Transient suppression shall be provided across all coils.
2. Suppression devices shall limit transients to 150 percent of the rated coil voltage.

3.7 OPERATOR WORKSTATIONS

A. SOFTWARE:

1. Install software in control units and operator workstation(s).
2. Implement all features of programs to specified requirements and as appropriate to sequence of operation.
3. Connect and configure equipment and software to achieve sequence of operation specified.

3.8 FIELD INSTALLATION NEATNESS AND CLEANLINESS

A. PERFORMANCE:

1. The Building Management System contractor shall:
   a. Clean up all debris resulting from their activities daily.

b. Remove all cartons, containers, crates, etc., under his/her control as soon as their contents have been removed. Waste shall be collected and placed in a designated location.

c. Upon completion of work, ensure the area and control equipment is free from installation dust, dirt, and debris.

3.9 IDENTIFICATION

A. CABLES:

1. Identify all control wires with labeling tape or sleeves using either words, letters, or numbers that can be exactly cross referenced with asbuilt drawings.

B. ENCLOSURES:

1. All field enclosures, other than controllers, shall be identified with a bakelite nameplate. The lettering shall be in white against a black or blue background.

C. JUNCTION BOXES:

1. Junction box covers shall be marked to indicate that they are a part of the BMS system.

D. FIELD DEVICES:

1. All I/O field devices (except space sensors) that are not mounted within FIPs shall be identified with name plates.
2. All I/O field devices inside FIPs shall be labeled.

3.10 DEVICE LOCATIONS

A. PROJECT DRAWINGS:

1. The location of sensors is per mechanical and architectural drawings.

B. SPACE SENSORS:

1. Space temperature or humidity sensors shall be mounted away from machinery generating heat, direct light, and diffuser air streams.

C. OUTSIDE AIR CONDITIONS:

1. Outdoor air sensors shall be mounted on the northerly facing directly in the outside air.
2. Install these sensors such that the effects of heat radiated from the building or sunlight is minimized.

D. ENCLOSURES:

1. Field enclosures shall be located immediately adjacent to the controller panel(s) to which it is being interfaced.

3.11 SYSTEM EVALUATION

A. SYSTEM ASSESSMENT

1. GENERAL:
   a. SOFTWARE: Upon completion of the control device installation, the Building Management System contractor shall load all system software and startup the system.
   b. STARTUP: The Building Management System contractor shall perform all necessary calibration, testing and de-bugging and perform all required operational checks to ensure that the system is functioning in full accordance with these specifications.

2. MANUFACTURER'S FIELD SERVICE:
   a. A directly employed factory authorized & trained service technician shall inspect, test, and adjust field assembled components and equipment installation, including connections, and to assist in field testing.
   b. Report results in writing.

3. EXPERTISE:
   a. The Building Management System shall be set up and checked by factory trained competent technicians skilled in the setting and adjustment of the BMS/DDC equipment used in this project.
   b. These technicians shall be experienced in the type of HVAC systems associated with this project.
   c. The Building Management System contractor shall perform tests to verify proper performance of components, routines, and points.
   d. Repeat tests until proper performance results.
   e. This testing shall include a point-by-point log to validate 100 percent of the input and output points of the DDC system operation.

4. POINT-TO-POINT CHECKOUT:
   a. Each I/O device (both field mounted as well as those located in field interface panels) shall be inspected and verified for proper installation and functionality.

b. A checkout sheet itemizing each device shall be filled out, dated, and approved by the Building Management System contractor for submission to the owner or owner's representative.

5. CONTROLLER AND WORKSTATION CHECKOUT:
   a. A field checkout of all controllers and front end equipment (computers, printers, modems, etc.) shall be conducted to verify proper operation of both hardware and software.
   b. A checkout sheet itemizing each device and a description of the associated tests shall be prepared and submitted to the owner or owner's representative by the completion of the project.
   c. All approved submitted sequences shall be tested by the Building Management System contractor.

6. APPLICATION SOFTWARE:
   a. All application software shall be verified and compared against the sequences of operation. Control loops shall be exercised by inducing a setpoint shift of at least 10 percent and observing whether the system successfully returns the process variable to setpoint. Record all test results and attach them to the Test Results Sheet.

7. ALARMS:
   a. Test each alarm in the system and validate that the system generates the appropriate alarm message, that the message appears at all prescribed destinations (workstations or printers), and that any other related actions occur as defined (i.e., graphic panels are invoked, reports are generated, etc.).
   b. Submit a Test Results Sheet to the owner.

8. GRAPHICAL INTERFACE:
   a. Perform an operational test of each unique graphic display and report to verify that the item exists, that the appearance and content are correct, and that any special features work as intended.
   b. Submit a Test Results Sheet to the owner.

9. INTEGRATION:
   a. Perform an operational test of each third party interface that has been included as part of the Building Management System.
   b. Verify that all points are properly polled, that alarms have been configured, and that any associated graphics and reports have been completed.
   c. If the interface involves a file transfer over Ethernet, test any logic that controls the transmission of the file, and verify the content of the specified information.

10. DEMONSTRATION:
    a. At the completion of the Acceptance Testing, this Building Management System contractor shall demonstrate the sequence of operations for each system to the Architect or his representative.

11. ACCEPTENCE:
    a. The Building Management System acceptance shall be contingent upon completion and review of all corrected deficiencies.
    b. The Building Management System *shall not be* accepted until all forms and checklists completed as part of the demonstration are submitted and approved as required in Part 1, “Submittals.”

3.12 ACCEPTANCE

A. APPROVAL: All tests described in this specification shall have been performed to the satisfaction of both the Engineer and “Owner” prior to the acceptance of the Building Management System as meeting the requirements of completion.

B. EXEMPTION: Any tests that cannot be performed due to conditions beyond the control of the Building Management System contractor may be exempt from the completion requirements if stated as such in writing by the engineer. Such exempt tests shall then be performed as part of the warranty.

3.13 OWNER TRAINING

A. OVERVIEW:

1. During the Building Management System commissioning and at such time acceptable performance of the hardware and software has been established, the Building Management System contractor shall provide onsite operator instruction to the owner's operating personnel.
2. Operator instruction shall be done during normal working hours and shall be performed by a competent representative familiar with the system hardware, software, and accessories.

3.14 WARRANTY

A. PERIOD:

1. The Direct Digital Controllers shall have a one (1) year manufacturer’s warranty. This warranty is to be provided by the BMS Manufacturer.

2. The additional devices, materials, and workmanship incorporated into the work shall be warranted for a period of one year from the time of system acceptance.

B. MATERIAL WARRANTY REPAIR &/OR REPLACEMENT:

1. Within this period, upon notice by the “Owner”, any defects in the Building Management System due to faulty materials, methods of installation or workmanship shall be promptly repaired or replaced by the Building Management System contractor at no expense to the “Owner”.

C. MAINTENANCE OF COMPUTER SOFTWARE PROGRAMS:

1. The Building Management System contractor shall maintain all software during the standard first year warranty period.
2. All factory upgrades to software during the first year warranty period shall be added to the systems, when they become available, at no additional cost.

D. SERVICE PERIOD:

1. Non-warranty service calls by the owner shall be addressed within 24 hours. Non-warranty service, replacement or repair are not to be considered as part of routine maintenance.

E. SERVICE DOCUMENTATION:

1. A copy of the service report associated with each owner initiated service call shall be provided to the owner.

F. SECURE REMOTE SYSTEM ACCESS:

1. The “Owner” shall grant the Building Management System Contractor reasonable access to the Building Management System during the warranty period.
2. Remote access to the Building Management System for the purpose of diagnostics and troubleshooting, via the Internet, during the warranty period shall be allowed.
3. Remote access shall be the first step of diagnosing and resolving “Owner” reported warranty issues.

3.15 OPERATION & MAINTENANCE MANUALS

A. RELATED SECTIONS:

1. See Division 1 for requirements.

B. REQUIRED ELEMENTS:

1. O&M manuals shall include the following elements, as a minimum:
    a. Asbuilt control drawings for all equipment.
    b. Asbuilt Network Communications Diagram.
    c. General description and specifications for all components.
    d. Completed Performance Verification sheets.
    e. Completed Controller Checkout/Calibration Sheets.

END OF SECTION

SECTION 23 95 00 APPENDIX – A - DEFINITIONS

A. SINGULAR USAGE: The use of words in the singular in this Section's documents shall not be considered as limiting when other indications in these documents denote that more than one such item is being referenced.

B. INTERPRETATION AID: Headings, paragraph numbers, titles, shading, bolding, underscores, clouds, and other symbolic interpretation aids included in this Division documents are for general information only and are to assist in the reading and interpretation of these Documents. Numerical figures are positive unless otherwise indicated as negative or minus.

C. DEFINITIONS: The following definitions may be used in describing the work of this Division, Additional definitions shall be declared throughout the specifications:

1. 10 Base T: The technical name for twisted pair Ethernet
2. Automated Analytics: Data analysis provided by the BMS or other software system which provides a comprehensive set of functions for manipulating and analyzing data of a database obtained via data logging of a device/system. The system implementer can create analytic functions to implement rules that are appropriate for the specific characteristics and needs of their facilities, equipment, processes, and project scope to determine if the system is operating per the design intent/sequence of operations or not. Alarms, notifications, and reports are a used to inform clients of off normal conditions which deserve attention for corrective action. (See Data Logging and Trend Analysis)
3. Actuator: A control device that opens or closes valve or damper in response to control signal.
4. Algorithm: A logical procedure for solving a recurrent mathematical problem; A prescribed set of well-defined rules or processes for the solution of a problem in a finite number of steps.
5. Analog: A continuously variable system or value not having discrete levels.
6. Binary: A two-state condition, i.e., "On" or "Off".
7. Floating: A timed spanned signal using a binary input/output to operate a variable positioned actuator.
8. Automatic Temperature Control System: The total integrated system of fully operational and functional elements, including equipment, software, programming, and associated materials, to be provided by this Division Building Management System Contractor and to be interfaced to the associated work of other related trades.

9. BACnet Interoperability Building Blocks (BIBBs): BIBB defines a small portion of BACnet functionality that is needed to perform a particular task. BIBBs are combined to build the BACnet functional requirements for a device.
10. BACnet Testing Laboratories (BTL): An organization under the direction of BACnet International responsible for testing products for compliance with ASHRAE 135.
11. Baud: A signal change in a communication link. One signal change can represent one or more bits of information. Peripheral communication is normally one bit per Baud. e.g., Baud rate = 78,000 Baud/sec is 78,000 bits/sec.
12. BIBBS: BACNET Interoperability Building Blocks
13. Binary: A two state condition, i.e., “ON” or “OFF”. Signals which are either constant or digital pulse (values) and generally represent two-position operating and alarm status.
14. Bridge: A device that connects two or more LAN segments at the physical and data link layers. This device may also perform message filtering if programmed to do so.
15. Browser: A computer program that accesses and displays information from the Internet or intranet.
16. Building Management System (BMS): The total integrated system of fully operational and functional elements, including equipment, software, programming, and associated materials, to be provided by this Division’s BMS Contractor and to the interface of the associated work of other related trades. The complete digital online real time interconnected configuration of digital processing units, workstations, panels, sub-panels, controllers, devices, and associated network nodes.
17. Building Management System Contractor (BMSC): The single contractor to provide the work of this Section. This BMS contractor shall be the primary designer of the system manufacturer, installer, commissioner, and ongoing service provider for the BMS work.
18. Building Management System Network: The total digital on-line real-time interconnected configuration of Building Management System digital processing units, workstations, panels, sub-panels, controllers, devices, and associated elements individually known as network nodes. May exist as one or more fully interfaced and integrated sub-networks, LAN, WAN, or the like.
19. Building Management System Integration: The complete functional and operational interconnection and interfacing of all Building Management System work elements and nodes in compliance with all applicable codes, standards, and ordinances so as to provide a single coherent Building Management System as required by this Division.
20. Category 6 cable: A type of wiring used for twisted pair Ethernet. The electrical characteristics of Cat 6 wiring make it less susceptible to electrical interference than lower categories.

21. Client: A system or device that makes use of another device for some particular purpose through a system request.
22. Communication Bus Topologies:
    a. Ethernet: A system for exchanging data between computers on a network using coaxial, fiber optic, or twisted-pair cables.
    b. Local Area Network (LAN): A local internal communication bus structure that exchanges information between networked computers or devices.
    c. Peer to Peer: A communication bus topology where all network devices are treated as equal. Each device connected has equal status and shares its data directly with all other network connected devices.
23. Communication Protocols: A defined set of standards governing exchange of data between network devices.
    a. BACnet: Building Automation Control Network Protocol, ASHRAE 135. A communications protocol allowing devices to communicate data over and services over a network.
    b. BACnet/IP: A BACnet protocol which defines and allows the use of a reserved UDP socket to transmit BACnet messages over IP networks. A BACnet/IP network is one or more IP subnetworks with the same BACnet network number.
    c. I/P: Internet Protocol network, connecting workstations and other host computers, servers etc. to share the information.
    d. Modbus TCP/IP: An open protocol for exchange of data over a TCP/IP network.
    e. MS/TP (EIA485): Master-slave/token-passing, IEE 8802-3. Datalink Protocol LAN option that uses twisted-pair wire for low-speed communication.
    f. TCP/IP: Transport control protocol/Internet protocol.
24. Conformance Classes: The set of requirements to be met in order for a device to conform to BACnet. BACnet defines six (6) levels of required support for standard objects and services. The higher the Conformance Class, the greater number of services provided.
25. Contract Terms used in this specification section shall mean:
    a. Furnish: To supply at The Building Management System Contractor (BMSC) 's cost to a designated third party contractor for installation. The Building Management System Contractor (BMSC) shall connect furnished items to the BMS, calibrate, test, commission, warrant and document.
    b. Install: To receive at the jobsite and mount.
    c. Provide: To Furnish, Install in place, connect, calibrate, test, commission, warrant, document, and supply services for operation.
    d. Wire: To Install the electric conductors and terminations.

e. Wiring: the low voltage network or control wiring and terminations.

26. Control Loop: A control algorithm, with an analog input/output
27. Control Devices: Valves, dampers, variable frequency drives, and other appurtenances that change the properties and henceforth vary the conditions of the controlled parameter, such as temperature, air flow, pressure, etc.
28. Controlled Parameter: Air, water, glycol, steam, or other media whose conditions are maintained or varied by the automatic control system and the control devices.
29. Control Sequence: A pre-programmed arrangement of software algorithms, logical computation, target values and limits as required attaining the defined operational control objectives.
30. Data Logging: Population of a database of data obtained from an electronic device that records data over time or in relation to location with an instrument or sensor or via external instruments and sensors. (See Automated Analytics and Trend Analysis)
31. Data Link Layer: Part of the Protocol Stack. The layer resides between the Physical Layer and the Network Layer. It passes to the Network Layer only acceptable incoming BACnet messages received from the Physical Layer. The Data Link Layer is responsible for adding a code to outgoing messages to identify them as BACnet messages before passing them on to the Physical Layer.
32. DDE: Dynamic Data Exchange.
33. Deadband: An analog range over which no change of state occurs.
34. Device (BACnet): A device, real or virtual, that supports digital communication using the BACnet protocol. Examples would be an operator terminal, router, unitary controller, etc.
35. Direct Digital Control (DDC): The programmed algorithms and software to provide direct closed loop control for equipment and controlled variables. Inclusive of Proportional, Derivative & Integral control algorithms together with target values, limits, logical functions, arithmetic functions, constant values, timing considerations and the like.
36. Direct Digital Control (DDC): The digital algorithms and pre-defined arrangements included in the Building Management System software to provide direct closed-loop control for the designated equipment and controlled variables. Inclusive of Proportional, Derivative, and Integral control algorithms together with target values, limits, logical functions, arithmetic functions, constant values, timing considerations and the like.
37. Distributed Control: Processing of system data is decentralized, and control decisions are made at subsystem level. System operational programs and information are provided to remote subsystems and status is reported back. On loss of communication, subsystems shall be capable of operating in a standalone mode using the last best available data.

38. Distributed Control System: A system in which the processing of system data is decentralized, and control decisions are made at the subsystem level.
39. Download: The transfer of programs and data files from a source to a remote device.
40. Ethernet: Ethernet is a widely used Local Area Network (LAN). Ethernet, which conforms to IEEE Standard 802.3.
41. Events: Changes in the state of an object, typically between Normal, Off-Normal, and Fault Condition. Events may be reported to other BACnet devices.
42. Fiber: An abbreviation for optical fiber.
43. Firewall: A security mechanism placed at the connection between networks and/or at networks outside connections. The firewall restricts access to the network.
44. Firmware: Software programmed into read only memory (ROM) chips which may not be changed without physical alteration.
45. Floating: A timed digital signal typically used to simulate a true Analog value.
46. FTT-10: Echelon Transmitter-Free Topology Transceiver.
47. Fully Open BAS: Building Automation System that <u>all</u> materials, hardware, firmware, software, and licenses can be procured through open market non-proprietary vendor warehouse distribution channels; in addition to being installed and maintained by <u>any</u> JACE factory authorized/qualified Building Automation and Controls Company. Single/sole vendor source materials, hardware, firmware, software, and licenses are prohibited from installation on this project.
48. Graphic Sequence of Operation: A graphic software programming language of algorithms, logical computation, target values and limits as required to obtain the defined control objectives. A dynamic graphical representation of the sequence of operation, showing all inputs and output logical blocks.
49. Graphic Web Page: A Web-browser page using 3-dimensional color-coded, animated images, which represents the associated system or equipment. This consists of all I/O points and control parameters for monitoring and operation of the equipment.
50. Gbps: Gigabits per second. A unit of data transfer speed equal to 1024 Mbps.
51. GIF: Graphic Interchange Format: A standardized image standard.
52. GUI: Graphical User Interface, a type of Operator Interface Device for a BAS.
53. Integration: The complete functional, operational, and interfacing of a third party equipment, including monitoring and control elements; to incorporate the third party equipment into a single coherent system as required by this Division.
54. Half Router: A device or node that can participate as one partner in an RS-232 point-to-point (PTP) connection. The Half Router partners that form an active PTP connection act as a single router for as long as the PTP connection between the two is active.

55. Hardware address: The address assigned to a computer or DDC controller that attaches to a network. A data frame sent from one hardware device to another hardware device must contain the recipient's address. A hardware address is also called the physical address.
56. Hertz: A unit of measure equal to an oscillation per second.
57. HTML: The source form used for documents on the Internet or on an intranet. HTML embeds commands that determine formatting along with the text to be displayed.
58. Instance: A number which uniquely identifies an object within a device (e.g., Analog Input No.1, No. 2, etc.). Device Objects are required to have an instance number that is unique to their internetwork. Instance numbers may range from 0 to 4194303.
59. Input/Output (I/O): Building Management System through which information is received or transmitted. An analog or discrete instances with an addressable database value, includes Analog input (AI), Binary input (BI), Analog output (AO), Binary output (BO).
60. I/P: Internet Protocol. A protocol that defines both the format of packets used on a TCP/IP internet or intranet and the mechanism for routing a packet to its destination.
61. Internetwork: Two or more networks connected by routers (the Internet itself and internetwork), up to 65,535 interconnected networks are allowed by BACnet. A BACnet internetwork provides only one message path between two devices. Internetworks may contain similar or dissimilar physical types, so an internetwork may consist of two Ethernet LANs, or an Ethernet LAN and several MS/TP LANs, etc.
62. JACE: JAVA Application Control Engine.
63. JPEG: Joint Photographic Experts Group: A standardized image compression standard.
64. LAN: A LAN is a network of interconnected hardware devices sharing resources within a relatively small geographic area.
65. LPDU: Link Protocol Data Units are packets created and read by the Data Link Layer. They contain a 3-byte header which identifies the packets as having been created by, and intended to be read by, a BACnet system. The header is followed by the BACnet LPDU.
66. Low Voltage: As defined in NFPA 70 for circuits and equipment operating at less than 50 V or for remote-control, signaling power-limited circuits.
67. MTBF: Mean time between failures.
68. Operating System (OS): Software, which controls the execution of computer application programs.
69. MS/TP: The Master-Slave/Token-Passing EIA-485 LAN developed for BACnet by ASHRAE. Operates at 9600, 19.2K, 38.4K and 76.8 K BPS. Master nodes (devices) pass around a speaking token which entitles the holder to initiate BACnet messages. Slave nodes can only respond to messages from Masters.

70. Native BACnet: A Building Automation System that uses the BACnet protocol for its data transfer between hardware devices.
71. Network Repeater: A device that receives data packet from one network and rebroadcasts it to another network. No routing information is added to protocol.
72. NIST: The National Institute of Standards and Technology is developing a BACnet device-compliance testing facility in Gaithersburg, MD.
73. NODE: A computer or digital device connected to a network, with an address on that network.
74. OBJECT (BACnet): BACnet objects represent, in a standardized way, the information required for a building automation control system. The analog input object, for example, represents sensor inputs such as temperature sensors.
75. Object Identifier: A 32-bit number which uniquely identifies an object within a device, or the device object internetwork-wide. 10 bits represent the object type and 22 bits the instance number.
76. OSI: Open System Interconnection standards.
77. Packet: A small, self-contained parcel of data sent across a digital network.
78. PAD (Packet-Assembler-Disassemblers): A device that sends BACnet messages across BACnet incompatible networks. The sending PAD receives the message from a BACnet network, encapsulates it in the correct format, and sends it on the non-compatible network to a receiving PAD. The receiving PAD removes the message from its encapsulation and transmits it on another BACnet network.
79. PC: Personal Computer.
80. PCX: File type for a photograph image file.
81. Peripheral: Individual components which support the system and provide ancillary functions i.e. monitor, printer, and I/O unit.
82. Peer-to-Peer Communication: Communication between equals. In BACnet, application programs (performing the functions of the BACnet devices on which they run) in devices of the appropriate conformance class talk to each other as peers, using the Protocol Stacks to deliver their message to each other. Likewise, Network Layers may talk as peers to determine how to route messages.
83. Physical Segment: A single continuous medium 9-wire to which BACnet nodes are attached.
84. Property: A particular characteristic of a BACnet object. Examples of properties are Description (a text description of what the object represents, such as OSA for outside air, and analog input object), Present Value (22 for the same input) and engineering units (° Celsius).
85. Proportional Integral Derivation (P-I-D):

a. Proportional control (P) control mode with continuous linear relationship between observed input signal and final controlled output element,
b. Integral control (I) an additional change in output based on both amount and duration of change in controlled variable
c. Derivative (D) correction to the controlled variable as sensed by its rate of change.

86. Protocol Implementation Conformance Statement (PICS): A document that identifies the particular BACnet options that are implemented in a device.
87. PTP: The Point-To-Point protocol provides serial communications between two BACnet half-router devices, typically for dial-up communications over-the-phone modems. It may be also applied as a hard-wired interface. For the duration of the connections, messages may be passed between networks on either side of the PTP connections.
88. Repeater: A device that connects two or more physical segments of a LAN at the physical layer and exactly reproduces the electrical signals on either side so that nodes on either side of the repeater are considered to be on the same network.
89. Router: A device which connects two or more networks of same or different types, so that a BACnet message may be transferred across the appropriate networks to reach its destination.
90. Server: A computer or hardware device which stores the resources accessed by other computers or hardware devices (clients).
91. Services (BACnet): BACnet defines 26 standard services; some services read or write properties of objects in the receiving device, others convey notification of alarms or other special events, others read and write files, and so on.
92. SNMP: Simple Network Management Protocol. The protocol that specifies how a network management station communicates with agent software in remote devices such as routers. SNMP defines the format of messages and their meaning.
93. SMTP: Simple Mail Transfer Protocol. E-mail or text message application. Often it resides on a server.
94. Software: All of operating system and programming of the BMS DDC firmware, sequence programming, database entries and definitions.
95. Supervisory Network Controller (SNC): A Direct Digital Controller which supports Building Controller (B-BC), Advanced Application Controller (AAC), Application-Specific Controller (B-ASC), and which communicates on a peer-to-peer network for transmission of global data.
96. TCP/IP: The protocol suite used in the Internet. Although the suite contains many protocols, TCP and IP are two of the most important.
97. Thinnet: A term used for the version of Ethernet that uses thinner coaxial cable.

98. Thin-client architecture: A term used to describe server/client system architectures in which one or more powerful hardware devices (servers) store the resources accessed by other less powerful hardware devices (clients).
99. T1L or TP Ethernet: Twisted pair Ethernet.
100. Trend Analysis: A presentation of selected live or recorded data points which is aimed at projecting both current and future movement of events through use of time series data analysis which involves comparison of data over a sequential period of time to spot a pattern or trend. (See Automated Analytics and Data Logging)
101. Unitary Controller: Devices which controls and/or monitors a single piece of equipment.
102. WEB: A synonym for the World Wide Web. In modern usage pertains to both the Internet and to intranets using the TCP/IP Protocol.
103. Provide: The term “Provide” and its derivatives when used in this Division shall mean to furnish, install in place, connect, calibrate, test, commission, warrant, document and supply the associated required services ready for operation.
104. Furnish: The term “Furnish” and its derivatives when used in this Division shall mean supply at the Building Management System Contractor’s cost to the designated third party trade contractor for installation. Building Management System Contractor shall connect furnished items to the Building Management System, calibrate, test, commission, warrant and document.
105. Install: The term “Install” and its derivatives when used in this Division shall mean receive at the jobsite and mount.
106. Wiring: The term “Wiring” and its derivatives when used in this Division shall mean provide the Building Management System wiring and terminations.
107. Protocol: The term “protocol” and its derivatives when used in this Division shall mean a defined set of rules and standards governing the on-line exchange of data between Building Management System network nodes.
108. Software: The term “software” and its derivatives when used in this Division shall mean all of programmed digital processor software, preprogrammed firmware and project specific digital process programming and database entries and definitions as generally understood in the Building Management System industry for real-time, on-line, integrated Building Management System configurations.

END OF SECTION 23 95 00

ORANGE & ROCKLAND UTILITIES, INC
SVOC NEW OFFICE ADDITION

Tax Map ID 56.52-1-2
390 West Route 59
Village of Spring Valley
Town of Ramapo
Rockland County, New York

ELECTRICAL
TECHNICAL SPECIFICATIONS

PREPARED BY

OMDEX INCORPORATED CONSULTING ENGINEERS
21 Cross Avenue, Midland Park, NJ 07432-1811, 201-444-0753, FAX 201-444-0839

April 28, 2025 – Issued for Bidding and Building Department Filing

PROFESSIONAL ENGINEER

BRIAN W. PASECHNICK, PE
NY License No. 91385

SECTION 26 01 00 – GENERAL ELECTRICAL REQUIREMENTS

PART 1 - GENERAL

1.1 RELATED DOCUMENTS

A. Section 23 00 00 – Special Requirements for Mechanical and Electrical Work" shall apply.

B. Section 23 00 50 – Vibration Isolation and Seismic Restraints for HVAC, Fire Protection, Electrical and Plumbing.

1.2 GENERAL

A. In addition to the work covered under this Section, comply with description of individual systems under other Sections of the Specifications.

1.3 CODES AND QUALITY ASSURANCE

A. The electrical contractor shall have the work of this section performed by vendors and mechanics experienced and skilled in its implementation or by a "Specialist", "Specialty Contractor' or "Specialty Subcontractor" under contractual agreement with the Contractor. These terms shall mean an individual or firm of established reputation, or, if newly organized, whose personnel have previously established a reputation in the same field, which is regularly engaged in, and which maintains a regular force of workmen skilled in either manufacturing or fabricating items required by the Contract, installing items required by the Contract, or otherwise performing work required by the Contract.

Where the Contract Specifications require installation by a "Specialist", that term shall also be deemed to mean either the manufacturer of the item, an individual or firm licensed by the manufacturer, or an individual or firm who will perform such work under the manufacturer's direct supervision.

B. The electrical contractor is responsible for performing all work in a neat, workmanlike manner. All operating procedures shall be strictly adhered to. Each Bidder shall visit the site and become informed as to the conditions of the premises and the extent and character of the work required. No consideration will be granted for any alleged misunderstanding of the Work to be done.

C. Use adequate numbers of skilled workmen who are thoroughly trained and experienced in the necessary crafts and who are completely familiar with the specified requirements and the methods needed for proper performance of the work of this Section.

D. All work, equipment and apparatus shall conform to the most recent requirements of the following:

New York State Uniform Construction Code
NFPA 72 - National Fire Protection Association, and any other applicable NFPA standards.
NEC - National Electrical Code of NFPA, 2020 Edition
NEMA - National Electric Manufacturers Association
Electrical Utility
ICC/ANSI A117.1 - 2017
Local Codes and Governmental Agencies

NBFU - National Board of Fire Underwriters
ANSI - American National Standards Institute
IPCEA - Insulated Power Cables Engineers Association
ASTM - American Society for Testing and Materials
UL - Underwriters' Laboratories
Requirements of the Owner's Insurance Underwriter

Without additional cost to the Owner, provide such other labor and materials as are required to complete the Work of this Section in accordance with the regulations of the current editions of these codes, and the requirements of governmental agencies having jurisdiction, regardless of whether such materials and labor are called for elsewhere in these Specifications. These rules, regulations and codes shall govern as a minimum standard. In the event of conflict with the Contract Drawings or Specifications requiring workmanship or material of a higher quality than required by the above-mentioned rules, regulations, codes and authorities, the most stringent of these documents shall govern.

E Engineering Drawings are schematic with regard to exact locations and dimensions. Review all Drawings provided, including; Architectural and Structural Drawings, Reflected Ceiling Plans, Plumbing, Fire Protection, HVAC, and Electrical Drawings, to confirm all requirements and identify all constraints. The Contractor shall coordinate his work with that of all other trades to avoid conflicts. It is the Contractor's responsibility to confirm that all equipment will fit. Any discrepancies or inconsistencies are to be reported immediately to the Architect and Engineer for clarification. Refer to the actual dimensions on the Architectural Drawings. Exact locations of lighting fixtures, diffusers, registers, thermostats, shall be directed by Architect.

F. Examination of the site will be made by the Contractor. The Contractor will compare it with the Drawings and Specifications and will familiarize himself with the conditions under which the work is to be performed. No allowance shall subsequently be made for any extra expense incurred due to failure or neglect to make such examination or to familiarize himself with the job conditions.

G. During the execution of work under this Contract the Contractor shall be responsible for protecting any equipment or structures in the work and adjacent areas.

H. Secure and pay for required authorizations from governmental agencies having jurisdiction.

I. All Work shall be guaranteed to be free from defects. Any defective materials or workmanship as well as damage to the work of all trades resulting from the same shall be replaced or repaired as directed for the duration of stipulated guarantee periods.

J. COORDINATION: Each Contractor shall be responsible for coordinating their work with that of all other trades. No installation shall take place without approval of the onsite entity (General Contractor, Construction Manager, etc.) responsible for coordination. Any work installed without approval and/or which interferes with the work of other trades that have been approved shall be removed and replaced at the Contractor's expense.

K. EXPOSED WIRING AND CONDUIT: There shall be no exposed wiring or conduit of any sort; whether implied by the drawings or not, unless expressly approved by the Architect.

1.3 DESCRIPTION OF WORK

A. Review all plans and specifications relative to this work, particularly those sections describing electrically operated equipment and become familiar with work called upon therein to do. Become familiar with all drawings and specifications, specifically the electrical drawings At the conclusion of the work, be responsible for the proper wiring up and functioning of all electrically operated equipment furnished and/or installed under this contract.

B. Work Included: Provide all labor, materials, equipment, tools, and management services for proper and complete execution of all electrical work. Without restricting the generality of the foregoing, the following items of work are included:

1. Obtaining and paying for all necessary permits, inspections and certificates required in connection with this work.
2. Miscellaneous Demolition of existing building systems.
3. Coordination with O&R for all work related to new service.
4. Underground duct-banks and cabling.
5. Underground primary duct banks.
6. Underground secondary electrical service from pad mounted transformer, including grounding, secondary feeders, connections at transformer, excavation and.
7. 480/277v service and distribution switchboard; NEMA 3R
   480/277v and 120/208v lighting and power distribution panels.
8. Dry type transformers.
9. Feeders, connections and circuits for equipment and devices.
10. Shunt trip circuit breakers for elevators.
11. Miscellaneous 120 volt supplied power as required by other trades whether shown on the plans or not.
12. Installation on outdoor 750kw diesel fired emergency generator, including sound attenuated enclosure and all ancillary equipment including automatic transfer switches. (Furnished by O&R, Installed by Contractor).
13. Electrical connections and power wiring to all equipment furnished and installed under other sections, including but not limited to power wiring to all mechanical equipment, fire protection systems, kitchenettes, motorized shades, hydraulic elevator, motorized projection screens, electrified door hardware, and associated equipment, electric hand dryers, and metered lavatories.
14. Connection and proper operation of all motors, controllers, etc.
15 Lighting fixtures, including; mounting hardware, wiring, lamps, switches, contactors, dimming equipment, occupancy sensors, photometric sensors, room controllers, etc.
16. Exit, night and emergency light and power circuits.
17. Wiring devices including receptacles, switches, pushbuttons and plug mold strips.
18. Telephone, communication, security, and audiovisual system empty raceways, boxes and sleeves.
19. Empty conduits, boxes, raceways and support, as shown on IT, AV and security documents and as required.
20. Networked Fire alarm and automatic detection system and associated raceways, cables, outlets, power, etc. (Contractor shall use O&R Proprietary Vendor, ARCO Protection System)
21. Grounding systems.
22. Site electrical work including site lighting and other site electrical work.
23. Hangars, anchors, sleeves, fire cutoff, smoke sealed and watertight sleeves, bases, and supports for fixtures, backboard and all other electrical equipment. Equipment slabs and housekeeping pads for electrical equipment requiring same.
24. Tests.

25. Cap flashing at electrical penetrations through roof.
26. Provisions for future photo-voltaic systems, approximately 500 Kw.
27. Coordination with other Divisions and Sections including review, and comment on trade coordination drawings.
28. Cutting and patching.
29. Excavation and backfill for electrical work inside and outside the building.
30. Outlet boxes, empty conduit, power wiring for miscellaneous systems as further described hereinafter (i.e., security systems, audiovisual systems, etc.)
31. All required seismic bracing as required and specified in Sections 15005.
32. Connections of site lighting, including trenching and backfill.
33. Prime and finish painting of electrical work.
34. Furnish and Install 200kva Uninterruptable Power Supply (UPS).
35. Debris removal.
36. Warranties and guarantees.
37. Instruction, operating, and maintenance manuals.
38. Shop drawings.
39. As-built record drawings.

1.4 RELATED WORK NOT INCLUDED IN THIS DIVISION

A. The following items are related to this division but are described under other Divisions and Sections:

1. Telephone, CCTV, Information Technology, security systems, and audiovisual systems, associated special wiring and specialty equipment back boxes, under “A/V Systems”, “Security", and "Telecommunications", “IT”, etc.

2. Appliances, machines and other special equipment, unless specified in other Divisions or Sections, by Owner.

3. Furnishing of utility, C/T's and meter, by utility company.

4. Base flashing of conduit through roof, under “Membrane Roofing”.

5. Furnishing and installing of telephone cables and equipment, under "Telecommunications".

6. Furnishing and installation of all motors fans, pumps, etc. which are supplied as an integral part of the machine assembly or as noted on the plans and other specification divisions, under “HVAC” & “Plumbing”.

7. All mechanical system control wiring (except as otherwise noted on plans and other specification divisions), under "HVAC", "Plumbing" and "Fire Protection" except miscellaneous power (120V) to control equipment.

8. Temporary light and power, under "General Conditions".

9. Elevator, under Elevator sections.

10. Finishing hardware, furnished under “Purchasing of Finishing Hardware”, installed under “Rough & Finish Carpentry”.

1.5 DIVISION OF RESPONSIBILITY

A. The requirements under Section 16010 are intended for the party or parties who have been duly awarded the applicable portion of work to be performed under the indexed sections of Division 16, also known as the Electrical Work.

1.6 MEASUREMENTS

A. The Contractor shall base all his measurements, both horizontal and vertical, on established bench marks. All work shall agree with these established lines and levels. He shall verify all measurements at site; and check the correctness of same as related to the work.

1.7 COVERING OF WORK

A. No raceway, fitting, or other work of any kind shall be covered up or hidden from view before it has been examined or authorized by the Engineer, Architect, and/or other authority having jurisdiction over same. Any unfaithful or imperfect work or materials discovered shall be removed and corrected immediately after being condemned and other work and materials furnished satisfactory to the Owner.

1.8 COORDINATION

A. If Contractor installs work so as to cause interference with work of other trades, he shall make necessary changes in work to correct the condition without extra charge.

B. The Contractor shall furnish all necessary templates, patterns, etc., for installing work and for purpose of making adjoining work conform. Furnish setting plans and shop details to other trades as required.

C. The Contractor shall not run any wiring for any equipment, device, or appliance without having the approved wiring diagram for that item in hand. Should the wiring shown therein differ from the drawing shown for such item in the Control Documents, he shall immediately bring such discrepancies to the attention of the Architect for resolution. Any wiring installed contrary to the manufacturer-approved wiring diagram shall be corrected at contractor's expense.

1.9 SUBMITTALS

A. Shop drawings and samples shall be submitted in accordance with the requirements established in General Conditions and all other applicable documents and shall consist of the following:

1. Electrical service layouts
2. Switchgear, switchboards.
3. Transformers
4. Panel Boards
5. Devices
6. Building Wire
7. Type MC Cable including hospital grade MC
8. EMT Conduit and fittings
9. PVC Conduit Sch. 40 & 80 and fittings

10. Rigid Steel Conduit and fittings
11. Steel City J-Boxes
12. Powerstrut Channel
13. Plates & Covers
14. Light Fixtures
15. Fire Alarm Products & Dwgs.
16. Empty Conduit Systems.
17. Motor Starters
18. Distribution Items
19. Fire stopping materials
20. UPS
21. All basic and general materials

B. Product data: In accordance with procedures outlined in the General Conditions, submit:
   1. Materials list of items proposed to be provided under this Section, with sources of supply and manufacture.
   2. Manufacturers' specifications, catalog cuts and other data needed to prove compliance with the specified requirements. Include shop standards for fabrication, cuts of hangers, clips, supports, attachments, anchors, etc., labeled as to the respective conditions or locations to which they apply.
   3. Product substitutions are to be requested in writing, and only in conformance with “General Conditions”. At the time of submission of product cuts for review for all substitutions, clearly indicate the Specification Section; provide complete information on the original product <u>and</u> the proposed product for review, and all deviations. Any substitutions requested by a contractor are to include all costs for related charges by other contractors. It is the responsibility of the contractor requesting the change to coordinate with any other trade impacted by the substitution.

C. Samples:
   1. Provide Samples when requested by Architect.
   2. When specifically so requested by the Contractor and permitted by the Engineer, authorized samples will be returned to the Contractor for installation in the Work.

D. Shop Drawings:
   1. Before fabrication or purchase of any work, major equipment or controls, prepare and submit for review, shop drawings of major equipment and scale layout and design of the systems in accordance with “General Conditions”. Include <u>all</u> access provisions, etc. Coordinate all of the above with all other trades.
   2. Prepare and submit Shop Drawings, showing at a scale not smaller than ¼” = 1'-0" all details of items to be shop fabricated under this Section. Maximum sheet size 30" x 42".
   3. Clearly identify by circle and by note "DEVIATION" and by note "INTERFERENCE", in large bold lettering, and deviations from Drawings and Specifications and any potential or unresolved interference condition and assume full responsibility for failure to do so.
   4. Submittal shall confirm fabrication and installation is in accordance with recommendations and applicable standards.
   5. For mandatory coordination of all work, including that which penetrates structural members, consult “General Conditions”.

E. Installation Requirements: Furnish and erect all equipment, hangers, and all accessories specified, indicated on the drawings or required to assure proper operation of all systems

installed under this Section and of all connected equipment furnished under other Sections of these Specifications but requiring services furnished under this Section.

F. Manuals: Upon completion of this portion of the Work, and as a condition of its acceptance, deliver to the Engineer three copies of an operation and maintenance manual compiled in accordance with the provisions of the General Conditions, and these Specifications. Include in each manual:
1. Copy of the authorized Record Documents of this portion of the Work.
2. Copies of all warranties and guarantees.
3. Wiring diagrams & directories.

G. Record Drawings (maintain in accordance with “General Conditions”. Concurrent with the progress of the Work, the Contractor shall maintain a set of as-built record prints noting all changes in the Work. Upon completion of the Work this marked up set of prints is to be turned over to the Owner for his records.

H. All required permits, fees and inspections shall be arranged and paid for by contractor. The Contractor shall present to the Owner, properly signed, all required certificates of final inspection and authorization before the Work will be accepted as complete.

PART 2 - PRODUCTS

2.1 UNIT RESPONSIBILITY

A. All switches, panelboards, etc. shall be of one manufacturer, including all components required for the several items.

2.2 EQUIPMENT AND SYSTEMS CRITERIA

A. The criteria of design and performance to produce the required operation is based on equipment shown or scheduled, and as specified.

B. Equipment of other manufacturers will be considered, subject to its acceptability and the following:

1. The equipment must conform to the structural design provisions for loads applied to the structure; to the dimensions established by drawings and other clearances.

2. Changes to the building arrangement or structure, which are required to suit substituted equipment offered by the Contractor must be at no expense to the Owner.

3. Size shall be one of the fundamental criteria in the determination of whether a proposed item is equivalent to a specified item.

C. Operation Equipment, Operating Systems and other products are specified by names and catalog numbers and also by performance criteria standards:

1. Where both specifying media are employed, the names and catalog numbers establish a standard for manufacturing quality, while the performance criteria governs for the capacity, rating output or modifications to the standard product identified by a catalog number.

2. In any question regarding intent, the capacity, rating or output which is compatible with the specified systems is intended and is to be provided.

D. The descriptions of equipment and systems cover basic equipment and operation, but not all the details of design and construction.

1. The use of the “singular trim” in descriptions does not limit the quantities to be furnished to produce the operation specified.

2. Provide equipment required to meet specified performance under installed conditions.

3. Factory wiring is to conform to NEMA or JIC or authorized industry, specifications unless otherwise specified.

4. Provide trim, enclosures and accessories required to make complete installation in each instance.

E. All Electrical Drawings are schematic and diagrammatic.

1. Symbols and diagrams are used to indicate the various items of work and the complete systems, but they do not necessarily have dimensional significance, neither do they necessarily include all related and subsidiary parts and equipment.

2. The work is to be installed complete and ready for operation in conformity with the intent expressed on the Drawings and in these Specifications.

3. Coordinate work with the requirements of the Architectural and Structural drawings for dimensions, locations and clearances.

4. Locations of electrical items which are exposed to view shall be taken from the Architectural Drawings.

2.3 FACTORY PROVIDED SEISMIC RESTRAINTS

A. All equipment manufacturers are required to provide internal factory restraints where necessary to comply with the seismic requirements of the 2006 International Building Code and applicable to the location and importance of the building as specified in Section 15005.

2.4 SEISMIC RESTRAINTS (REQUIRED BY ELECTRICAL WORK)

A. Installation of electrical equipment, panels, lighting, piping, etc. shall be installed in accordance with seismic requirements of the 2006 International Building Code NJ Edition and applicable to the location and importance of the building as specified in Section 15005.

2.5 EQUIPMENT INSTALLATION

A. Locate and set equipment anchor bolts, dowels and aligning devices for equipment requiring them.

1. Level and shim the equipment; coordinate and oversee the grouting work.

B. Field assembly, installation and alignment of equipment is to be done by the Contractor under field supervision provided by the manufacturer or with inspections, adjustment and approval by the manufacturer, as a part of the Contract Work.

2.6 CLEANING AND ADJUSTING

A. Cleaning:

1. Clean all materials and equipment; leave in condition ready to operate and ready to receive succeeding finishes where required.

2. Clean the operating equipment and systems to be dust-free inside and out.

PART 3 – EXECUTION

3.1 ACCESSIBILITY

A. The installation of all electrical equipment shall be conveniently and accessibly (ICC A117.1-2021.- compliant) located with reference to the finished building.

3.2 USE OF EQUIPMENT

A. The use of any equipment, or any part thereof, for purposes other than testing even with the Owner's consent, shall not be construed to be an acceptance of the work on the part of the Owner, nor shall it be construed to obligate the Owner in any way to accept improper work or defective materials.

3.3 CHARACTER OF WORK

A. The various component parts shall function together as a workable system, complete with everything necessary for their operation and with all equipment properly adjusted and in working order.

B. Execute the work in conformity with the best practice to minimize maintenance, provide accessibility and achieve a neat installation. The installation shall conform and accommodate itself to the building structure, its equipment and its usage. Conduit shall not be run along exterior wall cavities.

C. Refer and coordinate with the Contract Documents, shop drawings and field layouts of all other trades specified under other Sections of the Specifications; before installing any work.

3.4 SHUTDOWNS

A. When the removal of an existing system or the installation of a new system required the temporary shutdown of an existing operating system, the connection of the new system shall be performed at times coordinated with the Owner.

B. The Owner shall be notified of the estimated duration of the shutdown period at least ten (10) days in advance of the date the work is to be performed.

3.5 DEMOLITION

A. When demolition renders equipment, conduit and wiring useless, such equipment, conduit and wiring shall be removed. If construction, such as hung ceiling, furred bean, chase, etc. is opened up and removed during the course of the construction, the conduit and wiring therein shall be removed.

B. Provide temporary supports where required.

C. Where demolition reveals conduit, wiring and devices that must temporarily remain in service, same shall be rerouted or relocated to avoid being in the way of demolition or construction work.

3.6 DEBRIS REMOVAL

A. Routinely remove, in an orderly and efficient manner (and cart away and dispose of, by legal means, off the site and premises), all debris related to work of this Section; worksite and staging areas shall be kept clear of all debris on a daily basis; permit no debris accumulation which poses any threat to life safety or property. Non-conformance with the foregoing Contract requirements will be subject to all remedies established by the Project "General Documents".

3.7 GUARANTEE

A. The Contractor shall submit in writing (triplicate) a guarantee of Electrical work.

B. Such guarantee shall be for a period of two (2) years after the date of final acceptance of the work, and shall include the making of any repairs which may be required owing to defective workmanship and materials.

END OF SECTION 26 1 00

SECTION 26 02 00

SHORT CIRCUIT AND PROTECTIVE DEVICE COORDINATION STUDY

PART 1 – GENERAL

1.1 SCOPE

A. The contractor shall furnish short-circuit and protective device coordination studies as prepared by the equipment manufacturer.

1.2 RELATED SECTIONS

1.3 REFERENCES

A. Institute of Electrical and Electronics Engineers, Inc. (IEEE):
1. IEEE 141 – Recommended Practice for Electric Power Distribution and Coordination of Industrial and Commercial Power Systems
2. IEEE 242 – Recommended Practice for Protection and Coordination of Industrial and Commercial Power Systems
3. IEEE 399 – Recommended Practice for Industrial and Commercial Power System Analysis
4. IEEE 241 – Recommended Practice for Electric Power Systems in Commercial Buildings
5. IEEE 1015 – Recommended Practice for Applying Low-Voltage Circuit Breakers Used in Industrial and Commercial Power Systems.

B. American National Standards Institute (ANSI):
1. ANSI C57.12.00 – Standard General Requirements for Liquid-Immersed Distribution, Power, and Regulating Transformers
2. ANSI C37.13 – Standard for Low Voltage AC Power Circuit Breakers Used in Enclosures
3. ANSI C37.010 – Standard Application Guide for AC High Voltage Circuit Breakers Rated on a Symmetrical Current Basis
4. ANSI C 37.41 – Standard Design Tests for High Voltage Fuses, Distribution Enclosed Single-Pole Air Switches, Fuse Disconnecting Switches and Accessories.

C. The National Fire Protection Association 70, National Electrical Code, latest edition.

1.4 SUBMITTALS FOR REVIEW/APPROVAL

A. The short-circuit and protective device coordination studies shall be submitted to the design engineer prior to receiving final approval of the distribution equipment shop drawings and/or prior to release of equipment drawings for manufacturing. If formal completion of the studies may cause delay in equipment manufacturing, approval from the engineer may be obtained for preliminary submittal of sufficient study data to ensure that the selection of device and characteristics will be satisfactory.

1.5 SUBMITTALS FOR CONSTRUCTION

A. The results of the short-circuit and coordination studies shall be summarized in a final report. No more than five (5) bound copies of the complete final report shall be submitted. For large system studies, submittals requiring more than five (5) copies of the report will be provided without the section containing the computer printout of the short-circuit input and output data.

B. The report shall include the following sections:
1. One-line diagram
2. Descriptions, purpose, basis and scope of the study
3. Tabulations of circuit breaker, fuse and other protective device ratings versus calculated short circuit duties
4. Protective device time versus current coordination curves, tabulations of relay and circuit breaker trip unit settings, fuse selection
5. Fault current calculations including a definition of terms and guide for interpretation of the computer printout
6. Recommendations for system improvements, where needed
7. Executive Summary.

1.6 QUALIFICATIONS

A. The short-circuit and coordination studies shall be conducted under the supervision and approval of a Registered Professional Electrical Engineer skilled in performing and interpreting the power system studies. The Registered Professional Electrical Engineer shall be a full-time employee of the Engineering Services Organization.

PART 2 – PRODUCT

2.1 STUDIES

A. Contractor to furnish short-circuit and protective device coordination studies as prefaced by equipment manufacturer.

2.2 DATA COLLECTION

A. Contractor shall furnish all data as required by the power system studies. The Engineer performing the short-circuit and coordination studies shall furnish the Contractor with a listing of required data immediately after award of the contract. The Contractor shall expedite collection of the data to assure completion of the studies as required for final approval of the distribution equipment shop drawings and/or prior to the release of the equipment for manufacturing.

B. Source combination may include present and future motors and generators.

C. Load data utilized may include existing and proposed loads obtained from Contract Documents provided by Owner, or Contractor.

D. Include fault contribution of existing motors in the study, with motors < 100 hp grouped together. The Contractor shall obtain required existing equipment data, if necessary, to satisfy the study requirements.

2.3 SHORT-CIRCUIT AND PROTECTIVE DEVICE EVALUATION STUDY

A. Use typical conductor impedances based on IEEE Standards 141-1993.

B. Transformer design impedances shall be used when test impedances are not available.

C. Provide the following:
1. Calculation methods and assumptions
2. Selected base per unit quantities
3. One-line diagram of the system being evaluated
4. Source impedance data, including electric utility system and motor fault contribution characteristics
5. Typical calculations
6. Tabulations of calculated quantities
7. Results, conclusions, and recommendations.

D. Calculate short-circuit momentary and interrupting duties for a three-phase bolted fault at each:
1. Electric utility's supply termination point
2. Incoming switchgear
3. Unit substation primary and secondary terminals
4. Low voltage switchgear
5. Motor control centers
6. Standby generators and automatic transfer switches
7. Branch circuit panelboards
8. Other significant locations throughout the system.

E. For grounded systems, provide a bolted line-to-ground fault current study for areas as defined for the three-phase bolted fault short-circuit study.

F. Protective Device Evaluation:
1. Evaluate equipment and protective devices and compare to short circuit ratings
2. Adequacy of switchgear, motor control centers, and panelboard bus bars to withstand short-circuit stresses
3. Adequacy of transformer windings to withstand short-circuit stresses
4. Cable and busway sizes for ability to withstand short-circuit heating
5. Notify Owner in writing, of existing, circuit protective devices improperly rated for the calculated available fault current.

2.4 PROTECTIVE DEVICE COORDINATION STUDY

A. Proposed protective device coordination time-current curves shall be graphically displayed on log-log scale paper.

B. Include on each curve sheet a complete title and one-line diagram with legend identifying the specific portion of the system covered.

C. Terminate device characteristic curves at a point reflecting maximum symmetrical or asymmetrical fault current to which device is exposed.

D. Identify device associated with each curve by manufacturer type, function, and, if applicable, tap, time delay, and instantaneous settings recommended.

E. Plot the following characteristics on the curve sheets, where applicable:
1. Electric utility's protective device
2. Medium voltage equipment relays
3. Medium and low voltage fuses including manufacturer's minimum melt, total clearing, tolerance, and damage bands
4. Low voltage equipment circuit breaker trip devices, including manufacturer's tolerance bands
5. Transformer full-load current, magnetizing inrush current, and ANSI transformer withstand parameters
6. Conductor damage curves
7. Ground fault protective devices, as applicable
8. Pertinent motor starting characteristics and motor damage points
9. Pertinent generator short-circuit decrement curve and generator damage point
10. Other system load protective devices for the largest branch circuit and the largest feeder circuit breaker in each motor control center.

F. Provide adequate time margins between device characteristics such that selective operation is provided, while providing proper protection.

2.5 REPORT SECTIONS

A. Input Data:
1. Short-circuit reactance of rotating machines
2. Cable and conduit materials
3. Bus ducts
4. Transformers
5. Reactors
6. Aerial lines
7. Circuit resistance and reactive values.

B. Short-Circuit Data:
1. Source fault impedance and generator contributions
2. X to R ratios
3. Asymmetry factors
4. Motor contributions
5. Short circuit kVA
6. Symmetrical and asymmetrical fault currents.

C. Recommended Protective Device Settings:
1. Phase and Ground Relays:
a. Current transformer ratio
b. Current setting

c. Time setting
d. Instantaneous setting
e. Specialty non-overcurrent device settings
f. Recommendations on improved relaying systems, if applicable.

2. Circuit Breakers:
a. Adjustable pickups and time delays (long time, short time, ground)
b. Adjustable time-current characteristic
c. Adjustable instantaneous pickup
d. Recommendations on improved trip systems, if applicable.

PART 3 – EXECUTION

3.1 FIELD ADJUSTMENT

A. Adjust relay and protective device settings according to the recommended settings table provided by the coordination study. Field adjustments to be completed by the engineering service division of the equipment manufacturer under the Startup and Acceptance Testing contract portion.

B. Make minor modifications to equipment as required to accomplish conformance with short circuit and protective device coordination studies.

C. Notify Owner in writing of any required major equipment modifications.

D. Following completion of all studies, acceptance testing and startup by the field engineering service division of the equipment manufacturer, a 2-year warranty shall be provided on all components manufactured by the engineering service parent manufacturing company.

SECTION 26 04 00 – ELECTRICAL SERVICE

PART 1 – GENERAL

1.1 RELATED DOCUMENTS

A. Section 23 00 00- Special Requirements for Mechanical and Electrical Work shall apply.

B. Section 23 00 50 - Vibration Isolation and Seismic Restraints for HVAC, Fire Protection, Electrical and Plumbing.

1.2 RELATED WORK SPECIFIED ELSEWHERE

A. Section 26 44 00 - Disconnect Switches

Section 26 12 00 - Wires and Cables

1.3 SUBMITTALS

A. Submit shop drawings and samples in accordance with the General Conditions, General Electrical Requirements, Section 26 01 00, and Special Requirements for Mechanical and Electric Work, Section 23 00 00.

1.4 REFERENCE STANDARDS

A. Prior to the submission of bid, contact the Utility Company and the governing municipal authorities, to ascertain their latest requirements and determine the division of the work as well as the amount of the fees and back charges, if any, which shall be included in the bid price.

PART 2 - PRODUCTS

2.1 GENERAL

A. The work under this section shall consist of furnishing all labor and materials, equipment and appliances necessary and required to provide an electrical service complete and as herein specified and called for on the drawings.

B. The Contractor shall furnish install and connect all required conduit, cables, or other materials and equipment in accordance with the utilities standards and make all required connections from the incoming 480v secondary side of utility company transformer to service switch.

PART 3 - EXECUTION

3.1 GENERAL

A. Contractor shall contact Utility Company and submit application for service within 10 days of award of contract.

B. Contractor shall obtain load information from contract documents and shall utilize this

information for application of electrical service.

C. Contractor shall obtain utility work number as soon as possible and follow up periodically with utility company as to their site-specific layout and installation requirements.

D. Contractor shall send copies of all correspondences between the contractor and Utility company to architect and engineer.

E. All work shall be installed per the Utility Company requirements and all authorities having jurisdiction.

END OF SECTION 26 04 00

SECTION 26 05 20 – INSPECTIONS AND TESTS

PART 1 - GENERAL

1.1 RELATED DOCUMENTS

A. Section 23 00 00- Special Requirements for Mechanical and Electrical Work shall apply.

B. Section 23 00 50 - Vibration Isolation and Seismic Restraints for HVAC, Fire Protection, Electrical and Plumbing.

1.2 CONTRACTOR'S RESPONSIBILITY

A. Perform tests as hereinafter specified required for acceptance of the installation. Ten copies of all reports and test data shall be forwarded to the Architect in bound brochures.

B. Any changes or corrections which may be required as evidenced by these tests shall be made by the Contractor and the appropriate portion of the tests repeated at contractor's expense.

C. Upon satisfactory conclusion of these tests, the Contractor shall furnish, for each such item of equipment or system tested, a written statement certifying that there has been no invalidation of any warranties or guarantees, nor impairment of the capacity of functioning of the equipment or system tested.

PART 2 - PRODUCTS (NOT USED)

PART 3 - EXECUTION

3.1 INSPECTION

A. Installation will be subject to inspections by the Architect and/or Architect's representative. Where equipment, materials or workmanship do not comply with the requirements of the specifications or the contract drawings, they shall be corrected to the satisfaction of the Architect.

3.2 TESTING

A. No equipment shall be tested, or operated for any purpose, until it has been installed in complete accordance with the manufacturer's instructions.
In addition to the tests hereinbefore and hereinafter specified, all electrical wiring systems shall be tested in accordance with the manufacturer's recommendations and as required by the Architect.
Provide written certifications for tests indicated in paragraph B through F. All certified tests shall be reviewed and approved by a NJ Licensed Engineer. All test reports shall bear the engineers signature and seal.

B. Wiring Systems Tests:

1. Ground resistance tests shall be made at all test points as required by code and also as required by the Engineer.

2. Correct or replace any nominal current carrying circuit that is defective or grounded and also correct all other troubles revealed by these tests. All defects, whether through faulty workmanship or material furnished, shall be corrected at contractor's expense.

C. Motor Tests:

1. Make the following tests on all motors before startup: Check motor nameplates to HP, speed, phase and voltage. Check all bearings to see that they are properly filled with oil or grease. Check coupling alignment and shaft end play.

2. Megger test all motors before energizing. Make the following tests on all motors during or immediately after startup:
Check shaft rotation, bearing temperature and smooth operation.
Take current reading at full load using a clamp on ammeter. If ammeter reading is over the rated full load current, determine the reason for the discrepancy and take the necessary corrective action.

3. Following established procedures, equipment shall be energized after certification by the Contractor that the installation is satisfactory.

4. Overload elements in motor starters shall be adjusted and checked for suitability to the motor characteristics. Replace any overload element that is inadequate. The cause of any motor operating above full load rating shall be investigated and the cause removed instead of increasing the overload trip rating.

5. These final operational tests shall determine that the installation is correct. These tests shall not be made without permission of the Architect.

D. Auxiliary Systems:

1. Fire alarm system and other systems provided under this section shall be demonstrated to operate as specified to the satisfaction of all local authorities having jurisdiction, the Owner and the Engineers.

E. Grounding System:

1. The completed equipment grounding system shall be subject to a megger test at the main switchboard, and switching arrangement enclosure ground bar to ensure that the ground resistance does not exceed five (5) ohms. The ground resistance at individual items of utilization equipment shall not exceed ten (10) ohms. Measurements shall be made with a vibro-ground or ground ohmmeter using the three probe fall of potential method.

END OF SECTION 26 05 20

SECTION 26 05 40 - EQUIPMENT AND SUPPORTS

PART 1 – GENERAL

1.1 RELATED DOCUMENTS

A. Section 23 00 00 - Special Requirements for Mechanical and Electrical Work shall apply.

B. Section 23 00 50 - Vibration Isolation and Seismic Restraints for HVAC, Fire Protection, Electrical and Plumbing.

PART 2 - PRODUCTS

2.1 GENERAL

A. Provide bases, insulation mats, steel supports, anchor bolts, inserts, etc. for all equipment and apparatus, as specified hereinafter, provided under Division 16.

B. Floor mounted electrical equipment shall be installed on four (4) inch high concrete housekeeping pads. Concrete shall be in accordance with “cast in place concrete”.

PART 3 - EXECUTION

3.1 INSTALLATION

A. Where equipment supports are on concrete construction, take care not to weaken concrete or penetrate waterproofing.

B. Obtain prior approval for installation method of structural steel required to frame into building structural members for the support of equipment, conduit, etc. Welding will be permitted only when approved by Architect's Field Representative.

C. Dimensions and locations of concrete housekeeping pads shall be coordinated with requirements for equipment supplied and layouts of rooms containing it.

END OF SECTION 26 05 40

SECTION 26 05 50 – NAMEPLATE AND DEVICE PLATE MARKINGS

PART 1 - GENERAL

1.1 RELATED DOCUMENTS

A. Section 23 00 00- Special Requirements for Mechanical and Electrical Work shall apply.

B. Section 23 00 50 - Vibration Isolation and Seismic Restraints for HVAC, Fire Protection, Electrical and Plumbing.

1.2 SUBMITTALS

A. Submit shop drawings in accordance with the General and Special Conditions.

PART 2 - PRODUCTS

2.1 All plates shall be engraved with 1/8-inch-high letters and designates the following:

A. Name of equipment
B. Voltage
C. Number of phases
D. Current Rating

2.2 Laminated plastic bakelite nameplates shall be 3/4 inch by 2 inches or larger in dimension, fastened with countersunk, oval head, chrome plated machine screws. Lettering shall be 1/4" high, engraved white on black plate and shall designate the equipment served or the specific equipment designation as shown on the contract drawings. Smaller nameplate lettering may be used where adequate nameplate mounting space is not available but in no case shall the lettering be smaller than 1/8 inch.

PART 3 - EXECUTION

3.1 Laminated plastic nameplates shall be provided for all electrical equipment (except device plates) including but not limited to the following:

A. Switchboards.
B. Main and feeder devices in switchboards.
C. Distribution panelboards.
D. Main and branch devices in distribution panelboards.
E. Branch circuit breaker panelboards.
F. Motor starters.
G. Safety switches.
H. Pullboxes, cable support boxes and cable tap boxes. These nameplates shall designate feeders within pullbox, cable support or cable tap box and equipment served by each feeder.
I. Single pole switches used for motor or equipment disconnects.
J. Systems' cabinets (i.e. fire alarm, etc.).

END OF SECTION 26 05 90

SECTION 26 07 00 – UNDERGROUND DUCT BANKS

PART 1 – GENERAL

1.1 RELATED DOCUMENTS

A. Section 23 00 00- Special Requirements for Mechanical and Electrical Work shall apply.

B. Section 23 00 50 - Vibration Isolation and Seismic Restraints for HVAC, Fire Protection, Electrical and Plumbing.

1.2 PRODUCT DELIVERY, STORAGE AND HANDLING

A. Store conduit to avoid unnecessary handling until installation.

1.3 QUALITY ASSURANCE

A. Firms regularly engaged in manufacture of this material with characteristics and capacities required, whose products have been in satisfactory use in similar service for not less than 10 years.

B. Provide equipment whose performance, under specified conditions, is certified by the manufacturer.

1.4 SUBMITTALS

A. Submit shop drawings and samples in accordance with General Electrical Requirements -Section 16010.

PART 2 - PRODUCTS

2.1 DUCT SYSTEM

A. Refer to electrical Drawings for underground duct bank work to be done by Electrical Contractor.

PART 3 – EXECUTION

3.1 EXCAVATION AND BACKFILL

A. Perform all excavation and backfill in accordance with the requirements of “excavation, filling and grading”.

B. Provide concrete encasement where indicated on drawings. Concrete shall conform to the requirements of “concrete work”.

3.2 INSTALLATION OF SECONDARY DUCT SYSTEM

A. Install duct line so that top of duct is not less than 36 inch below finished grade or finished paving at any point.

B. Accomplish changes in direction of runs exceeding total of 10 Degrees, either vertical or horizontal, by long sweep bends with minimum radius of 25 feet.

1. Manufactured bends may be used at ends of short runs of 100 feet or less.

2. Manufactured bends shall have a minimum radius of 48 inch for ducts of five inch in diameter and larger.

C. Thoroughly clean conduit before using or laying.

D. During construction and after duct line is completed, plug ends of conduits to prevent water washing into conduit or manholes.

1. Take particular care to keep conduits clear of concrete, dirt and any other substance during course of construction.

E. After duct line has been completed, pull standard flexible mandrel not less than 12 inch long, with diameter approximately 1/4 inch less than inside diameter of conduit, through each conduit.

F. Pull brush with stiff bristles through each conduit to make certain that no particles of earth, sand or gravel have been left in line.

G. Pneumatic rodding may be used.

H. Install pull wire in all unused new ducts.

1. Extend minimum of three feet beyond ends of ducts.

I. Make conduit joints in accordance with manufacturer's recommendations for conduit and coupling selected.

1. Make conduit joints watertight.

END OF SECTION 26 07 00

SECTION 26 11 00

RACEWAYS AND BOXES FOR ELECTRICAL SYSTEMS

PART 1 - GENERAL

1.1 RELATED DOCUMENTS

A. Drawings and general provisions of the Contract, including General and Supplementary Conditions and Division 01 Specification Sections, apply to this Section.
B. Section 23 00 00- Special Requirements for Mechanical and Electrical Work shall apply.
C. Section 23 00 50 - Vibration Isolation and Seismic Restraints for HVAC, Fire Protection, Electrical and Plumbing.

1.2 SUMMARY

A. Section Includes:
Metal conduits, tubing, and fittings.
Nonmetallic conduits, tubing, and fittings.
Metal wireways and auxiliary gutters.
Surface raceways.
Poke Thru Assemblies.
Boxes, floor boxes, enclosures, and cabinets.
B. Related Requirements:
Division 26 Section "Underground Ducts and Raceways for Electrical Systems" for exterior duct-banks, manholes, and underground utility construction.

1.3 DEFINITIONS

A. GRC: Galvanized rigid steel conduit.
B. IMC: Intermediate metal conduit.
C. EMT: Electrical Metallic Tubing.
D. PVC: Polyvinyl Chloride

1.4 SUBMITTALS

A. Product Data: For surface raceways, wireways and fittings, floor boxes, hinged-cover enclosures, and cabinets.
B. Shop Drawings: For custom enclosures and cabinets. Include plans, elevations, sections, and attachment details.

1.5 QUALITY ASSURANCE

A. All products shall be UL labeled for their intended use.
B. Comply with NFPA 70.

1.6 INFORMATIONAL SUBMITTALS

A. Source quality-control reports.
B. Coordination Drawings: Conduit routing plans, drawn to scale, on which the following items are shown and coordinated with each other, using input from installers of items involved:
Structural members in paths of conduit groups with common supports.

HVAC and plumbing items and architectural features in paths of conduit groups with common supports.

1.7 Special Warranty for PVC coated GRC and fittings: Manufacturers standard form in which manufacturer of the conduit and fittings agrees to replace components that fail in materials or workmanship within specified warranty period.
A. Five years after beneficial occupancy by University.

PART 2 - PRODUCTS

2.1 METAL CONDUITS, TUBING, AND FITTINGS

A. Manufacturers: Subject to compliance with requirements, products of all manufacturers are acceptable provided they have a smooth interior, are UL listed and labeled as defined in NFPA 70 for the intended location and application and are electro-galvanized steel (EMT) or hot dipped galvanized steel inside and out (GRC). For PVC coated GRC, conduit and fittings shall be obtained from the same manufacturer:
B. GRC: Comply with ANSI C80.1 and UL 6.
C. PVC coated GRC: Comply with ANSI C80.1, UL 6 and NEMA RN – 1.
D. IMC: Comply with ANSI C80.6 and UL 1242.
E. EMT: Comply with ANSI C80.3 and UL 797.
F. FMC: Comply with UL 1; zinc-coated steel.
G. LFMC: Flexible steel conduit with PVC jacket and complying with UL 360.
H. Multi-conductor Cable type MC and AC.
I. Electrical nonmetallic tubing (ENT or “blue tube”) and liquid-tight flexible nonmetallic conduit (LFNC) are not acceptable for use on any Project.
J. Fittings for Metal Conduit: Comply with NEMA FB 1 and UL 514B.
1. Conduit Fittings for Hazardous (Classified) Locations: Comply with UL 886 and NFPA 70.
2. Fittings for GRC:
a. Material: Steel.
b. Type: threaded.
3. Fittings for PVC coated GRC:
a. Urethane coating of nominal 2 mil thickness shall be uniformly and consistently applied to the interior of all fittings.
b. All female threads on fittings and couplings shall be protected by urethane coating.
4. Fittings for EMT:
a. Material: Steel.
b. Type: compression – indoors; compression -outdoors.
c. Set screw fittings are prohibited.
5. Flexible Conduit: Use only fittings listed for use with flexible conduit. Comply with NEMA FB 2.20.
6. Expansion Fittings: PVC or steel to match conduit type, complying with UL 651, rated for environmental conditions where installed, and including flexible external bonding jumper.
K. Joint Compound for IMC or GRC: Approved, as defined in NFPA 70, by authorities having jurisdiction for use in conduit assemblies, and compounded for use to lubricate and protect threaded conduit joints from corrosion and to enhance their conductivity.

2.2 NONMETALLIC CONDUITS AND FITTINGS

A. Manufacturers: Subject to compliance with requirements, products of all manufacturers are acceptable provided they are sunlight resistant and UL listed and labeled as defined in NFPA 70 and marked for intended location and application. Conduit and fittings shall be obtained from the same manufacturer.
B. RNC: Type EPC-40-PVC, complying with NEMA TC 2 and UL 651 unless otherwise indicated.
C. Fittings for RNC: Comply with NEMA TC 3; match to conduit or tubing type and material.

D. Solvent cements and adhesive primers shall have a VOC content of 510 and 550 g/L or less, respectively, when calculated according to 40 CFR 59, Subpart D (EPA Method 24).

2.3 METAL WIREWAYS AND AUXILIARY GUTTERS

A. Manufacturers: Subject to compliance with requirements, provide products by one of the following:
Cooper B-Line, Inc.
Hoffman; a Pentair company.
Square D; a brand of Schneider Electric.

B. Description: Sheet metal, complying with UL 870 and NEMA 250, Type 1 unless otherwise indicated, and sized according to NFPA 70.

1. Metal wireways installed outdoors shall be listed and labeled as defined in NFPA 70, by a qualified testing agency, and marked for intended location and application.

C. Fittings and Accessories: Include covers, couplings, offsets, elbows, expansion joints, adapters, hold-down straps, end caps, and other fittings to match and mate with wireways as required for complete system.

D. Wireway Covers: Screw-cover type unless otherwise indicated.

E. Finish: Manufacturer's standard enamel finish.

2.4 SURFACE RACEWAYS

A. Listing and Labeling: Surface raceways shall be UL listed and labeled as defined in NFPA 70 and marked for intended location and application.

B. Surface Metal Raceways: Galvanized steel with snap-on covers complying with UL 5. Manufacturer's standard enamel finishes in color selected by Architect. Provide dividers as required to separate systems of different voltages.

1. Manufacturers: Subject to compliance with requirements, provide products by one of the following:
   a. Panduit Corp.
   b. Wiremold / Legrand #700 or better.

2.5 POKE THRU ASSEMBLIES

A. Manufacturers: Subject to compliance with requirements, provide products by one of the following:
Hubbell Incorporated; Wiring Device-Kellems.
Pass & Seymour/Legrand; Wiring Devices & Accessories.
Thomas & Betts Corporation.
Legrand - Wiremold Company.

B. Poke-Thru Assemblies:
Factory-fabricated and -wired assembly of below-floor junction box with multi-channeled, through-floor raceway/firestop unit and detachable matching floor service outlet assembly.
Steel service head and junction box.
Poke-thru box fittings shall maintain a minimum two-hour fire rating.
Comply with UL 514 scrub water exclusion requirements.
Service Outlet Assembly: Flush type with services indicated.
Selected to fit nominal 4-inch (100-mm) cored holes in floor and matched to floor thickness.

2.6 BOXES, ENCLOSURES, AND CABINETS

A. Manufacturers: Subject to compliance with requirements, provide products by one of the following:
Cooper Crouse-Hinds.
EGS/Appleton Electric.
FSR Inc.

Hoffman; a Pentair company.
Hubbell Incorporated; Killark Division.
O-Z/Gedney; a brand of EGS Electrical Group.
RACO; a Hubbell Company.
Thomas & Betts Corporation.
Wiremold / Legrand.

B. General Requirements for Boxes, Enclosures, and Cabinets: Boxes, enclosures, and cabinets installed in wet locations shall be listed for use in wet locations.

C. Sheet Metal Outlet and Device Boxes: Comply with NEMA OS 1 and UL 514A.
   1. Minimum depth shall be 2-1/8 inches.

D. Cast-Metal Outlet and Device Boxes: Comply with NEMA FB 1, ferrous alloy, Type FD, with gasketed cover.

E. Metal Floor Boxes:
   Material: Sheet metal, 11 gauge.
   Type: Flush. Cover with 0.25” square aluminum flange rated for carpet/tile installations. Provide pour pan accessory for on grade installations.
   Shape: Rectangular.
   Listing and Labeling: Metal floor boxes shall be listed and labeled UL 514A.

F. Luminaire Outlet Boxes: Brass or Steel, Nonadjustable, designed for attachment of luminaire weighing 50 lb (23 kg). Outlet boxes designed for attachment of luminaires weighing more than 50 lb (23 kg) shall be listed and marked for the maximum allowable weight.

G. Sheet Metal Pull and Junction Boxes 100 cu. in. and smaller: NEMA OS 1.

H. Cast-Metal Access, Pull, and Junction Boxes: Comply with NEMA FB 1 and UL 1773, galvanized, cast iron with gasketed cover.

I. Box extensions used to accommodate new building finishes shall be of same material as recessed box.

J. Hinged-Cover Enclosures: Comply with UL 50 and NEMA 250, Type 1 with continuous-hinge cover with flush latch unless otherwise indicated.
   Metal Enclosures: Steel, finished inside and out with manufacturer's standard enamel.
   Nonmetallic Enclosures: Plastic.
   Interior Panels: Steel; all sides finished with manufacturer's standard enamel.

K. Cabinets:
   NEMA 250, Type 1 galvanized-steel box with removable interior panel and removable front, finished inside and out with manufacturer's standard enamel.
   Hinged door in front cover with flush latch and concealed hinge.
   Key latch to match panelboards: Corbin #4T3142. Confirm with NU Electric Shop.
   Metal barriers to separate wiring of different systems and voltage.
   Accessory feet where required for freestanding equipment.

PART 3 - EXECUTION

3.1 RACEWAY APPLICATION

A. Outdoors: Apply raceway products as specified below unless otherwise indicated:
   Exposed Conduit: GRC, IMC, or RNC, Type EPC-80-PVC.
   Concealed Conduit, Aboveground: IMC, EMT, or RNC, Type EPC-40-PVC.
   Underground Conduit: RNC, Type EPC-40-PVC, direct buried or concrete encased as indicated.
   Connection to Vibrating Equipment (Including Transformers and Hydraulic, Pneumatic, Electric Solenoid, or Motor-Driven Equipment): LFMC.
   Boxes and Enclosures, Aboveground: NEMA 250, Type 3R.

B. Indoors: Apply raceway products as specified below unless otherwise indicated:
   1. Exposed, Not Subject to Physical Damage: EMT.
   2. Exposed, Not Subject to Severe Physical Damage (Mechanical rooms and similar): EMT.
   3. Exposed and Subject to Severe Physical Damage (Parking Garages or where indicated): EMT.
   4. Concealed in Ceilings and Interior Walls and Partitions: EMT.

5. Connection to Vibrating Equipment (Including Transformers and Hydraulic, Pneumatic, Electric Solenoid, or Motor-Driven Equipment): FMC, except use LFMC in damp or wet locations.
6. Damp or Wet Locations: EMT or IMC.
7. Pools, Corrosive and Similar Locations: PVC.
8. Basements, mechanical and electrical rooms: EMT
9. Boxes and Enclosures: NEMA 250, Type 1, except use NEMA 250, Type 4 stainless steel in institutional and commercial kitchens and damp or wet locations.
12. In concrete slabs: Type EPC-40-PVC.
13. PVC conduit shall not be run in wall spaces or building cavities.

C. Minimum Raceway Size: 3/4-inch trade size for branch circuits, one-inch embedded in slabs, and five-inch for primary services. Maximum fill for branch circuit conduits: 30%. Maximum fill for feeder conduits: per code.

D. Mixing different types of conduits indiscriminately in the same system is prohibited.

E. Raceway Fittings: Compatible with raceways and suitable for use and location.
Rigid and Intermediate Steel Conduit: Use threaded rigid steel conduit fittings unless otherwise indicated. Comply with NEMA FB 2.10.
EMT: Use watertight compression type steel fittings with insulated throat. Comply with NEMA FB 2.10.
Flexible Conduit: Use only fittings listed for use with flexible conduit. Comply with NEMA FB 2.20.

F. Install surface raceways only where indicated on Drawings.

G. Do not install nonmetallic conduit where ambient temperature exceeds 120 deg F (49 deg C).

3.2 INSTALLATION

A. Comply with NECA 1 and NECA 101 for installation requirements except where requirements on Drawings or in this article are stricter. Comply with NFPA 70 limitations for types of raceways allowed in specific occupancies and number of floors.

B. Installers of the PVC-coated galvanized rigid conduit system shall be certified by the manufacturer and be able to present a valid, unexpired certified installer card prior to starting installation. All manufacturer’s clamping, cutting, threading, bending, and assembly instructions shall be followed

C. Keep raceways at least 6 inches (150 mm) away from parallel runs of flues and steam or hot-water pipes. Install horizontal raceway runs above water and steam piping.

D. Where two or more conduits are run together they shall be racked. Use minimum ¼”x20 threaded rod to support “‘trapeze” type racks.

E. Complete raceway installation before starting conductor installation.

F. Arrange stub-ups so curved portions of bends are not visible above finished slab.

G. Install no more than the equivalent of three 90-degree bends in any conduit run except for control wiring conduits, for which fewer bends are allowed. Support within 12 inches (300 mm) of changes in direction.

H. Conceal conduit and EMT within finished walls, ceilings, and floors unless otherwise indicated. Install conduits parallel or perpendicular to building lines.

I. Support conduit within 12 inches (300 mm) of enclosures to which attached.

J. All suspension systems must be hung independently from structure; “piggyback” suspension systems for raceways are prohibited.

K. PVC Raceways Below Slabs:
Run conduit larger than 1-inch (27-mm) trade size, parallel or at right angles to main reinforcement. Where at right angles to reinforcement, place conduit close to slab support. Secure raceways to reinforcement at maximum10-foot (3-m) intervals.
Arrange raceways to cross building expansion joints at right angles with expansion fittings.
Arrange raceways to keep a minimum of 3 inches (75 mm) of concrete encasement in all directions.
Do not embed threadless fittings in concrete unless specifically approved by the Chief Electrician for each specific location. Fittings shall be concrete tight.

L. PVC Large Diameter Raceways Bending Radius:
Four-inch conduit: 35” minimum.

Five-inch: 50” minimum.
Six-inch: 61” minimum.

M. Stub-ups to Above Recessed Ceilings:
Use EMT for raceways.
Use a conduit bushing or insulated fitting to terminate stub-ups not terminated in hubs or in an enclosure.

N. Threaded Conduit Joints, Exposed to Wet, Damp, Corrosive, or Outdoor Conditions: Apply listed compound to threads of raceway and fittings before making up joints. Follow compound manufacturer's written instructions.

O. Raceway Terminations at Locations Subject to Moisture or Vibration: Use insulating bushings to protect conductors including conductors smaller than No. 4 AWG.

P. Terminate threaded conduits into threaded hubs or with locknuts on inside and outside of boxes or cabinets. Install bushings on conduits up to 1-1/4-inch (35mm) trade size and insulated throat metal bushings on 1-1/2-inch (41-mm) trade size and larger conduits terminated with locknuts. Install insulated throat metal grounding bushings on service conduits.

Q. Install raceways square to the enclosure and terminate at enclosures with locknuts. Install locknuts hand tight plus 1/4 turn more.

R. Do not rely on locknuts to penetrate nonconductive coatings on enclosures. Remove coatings in the locknut area prior to assembling conduit to enclosure to assure a continuous ground path.

S. Cut conduit perpendicular to the length. For conduits 2-inch (53-mm) trade size and larger, use roll cutter or a guide to make cut straight and perpendicular to the length.

T. Install pull wires in empty raceways. Use polypropylene or monofilament plastic line with not less than 200-lb (90-kg) tensile strength. Leave at least 12 inches (300 mm) of slack at each end of pull wire. Cap underground raceways designated as spare above grade alongside raceways in use.

U. Surface Raceways:
Install surface raceway with a minimum 2-inch (50-mm) radius control at bend points.
Secure surface raceway with screws or other anchor-type devices at intervals not exceeding 48 inches (1200 mm) and with no less than two supports per straight raceway section. Support surface raceway according to manufacturer's written instructions. Tape and glue are not acceptable support methods.

V. Install raceway sealing fittings at accessible locations according to NFPA 70 and fill them with listed sealing compound. For concealed raceways, install each fitting in a flush steel box with a blank cover plate having a finish similar to that of adjacent plates or surfaces. Install raceway sealing fittings according to NFPA 70.

W. Install devices to seal raceway interiors at accessible locations. Locate seals so no fittings or boxes are between the seal and the following changes of environments. Seal the interior of all raceways at the following points:
Where conduits pass from warm to cold locations, such as boundaries of refrigerated spaces.
Where an underground service raceway enters a building or structure.
Where otherwise required by NFPA 70.

X. Comply with manufacturer's written instructions for solvent welding RNC and fittings.

Y. Expansion-Joint Fittings:
1. Install in each run of aboveground RNC that is located where environmental temperature change may exceed 30 deg F (17 deg C) and that has straight-run length that exceeds 25 feet (7.6 m). Install in each run of aboveground RMC and EMT conduit that is located where environmental temperature change may exceed 100 deg F (55 deg C) and that has straight-run length that exceeds 100 feet (30 m).
2. Install type and quantity of fittings that accommodate temperature change listed for each of the following locations:
   a. Outdoor Locations Not Exposed to Direct Sunlight: 125 deg F (70 deg C) temperature change.
   b. Outdoor Locations Exposed to Direct Sunlight: 155 deg F (86 deg C) temperature change.
   c. Indoor Spaces Connected with Outdoors without Physical Separation: 125 deg F (70 deg C) temperature change.
   d. Attics: 135 deg F (75 deg C) temperature change.

3. Install fitting(s) that provide expansion and contraction for at least 0.00041 inch per foot of length of straight run per deg F (0.06 mm per meter of length of straight run per deg C) of temperature change for PVC conduits. Install fitting(s) that provide expansion and contraction for at least 0.000078 inch per foot of length of straight run per deg F (0.0115 mm per meter of length of straight run per deg C) of temperature change for metal conduits.
4. Install expansion fittings at all locations where conduits cross building or structure expansion joints.
5. Install each expansion-joint fitting with position, mounting, and piston setting selected according to manufacturer's written instructions for conditions at specific location at time of installation. Install conduit supports to allow for expansion movement.

Z. Flexible Conduit Connections: Comply with NEMA RV 3. Use a maximum of 72 inches (1830 mm) of flexible conduit for recessed and semi-recessed luminaires, equipment subject to vibration, noise transmission, or movement; and for transformers and motors.
Use LFMC in damp or wet locations.
Use a maximum of 72 inches (1830 mm) of ½” FMC for recessed and semi-recessed luminaires. Use of 3/8” FMC is permitted subject to review by the Chief Electrician.
Final connections to motors or equipment subject to vibration, noise transmission, or movement shall use FMC not exceeding four feet in length.
Short lengths of FMC shall be used for final primary and secondary connections to Low Voltage transformers (<600V).

AA. Mount boxes at heights indicated on Drawings. If mounting heights of boxes are not individually indicated, give priority to ADA requirements. Install boxes with height measured to center of box unless otherwise indicated.

BB. Recessed Boxes in Masonry Walls: Saw-cut opening for box in center of cell of masonry block, and install box flush with surface of wall. Prepare block surfaces to provide a flat surface for a raintight connection between boxes and cover plate or supported equipment and box.

CC. Do not install boxes back-to-back in walls. Provide minimum 6-inch separation in non-fire-rated walls. Provide minimum 24-inch horizontal separation in acoustic-rated walls.

DD. Boxes shall be secured between two studs. Boxes connected to one stud are not permitted.

EE. Locate boxes so that cover or plate will not span different building finishes.

FF. Support boxes of three gangs or more from more than one side by spanning two framing members or mounting on brackets specifically designed for the purpose.

GG. Fasten junction and pull boxes to or support from building structure. Do not support boxes by conduits.

HH. Set metal floor boxes level and flush with finished floor surface.

3.3 SLEEVE AND SLEEVE-SEAL INSTALLATION FOR ELECTRICAL PENETRATIONS

A. Install sleeves and sleeve seals at penetrations of exterior floor and wall assemblies.

3.4 FIRESTOPPING

A. Apply firestopping to electrical penetrations of fire-rated floor and wall assemblies to restore original fire-resistance rating of assembly according to Division 07.
1. Products: Cooper B –Line, 3M, Hilti, Specified Technologies, Inc.

3.5 IDENTIFICATION

A. Comply with Division 26 Section "Identification for Electrical Systems."

B. Junction boxes of different systems shall be identified by colors indicated below. Box and cover shall be painted prior to attaching identification labels.

C. Provide permanent nameplates for all pull and junction boxes identifying circuits, voltage, and source.

D. Where conduit is exposed in public or finished areas, the conduits shall be painted to match the adjacent wall or ceiling color. Associated junction boxes and covers shall be painted inside to match Northwestern standard conduit color code below.

E. Raceways and couplers of different systems shall be identified by color. Raceways up to 4” shall have factory applied finish.
   1. Raceways up to 4” shall have solid color within electrical rooms and vaults.
   2. Raceways larger than 4” shall be identified by permanent color bands installed within six inches of any pull or junction box, enclosure, fitting, and every twenty feet of run.

F. Colors: System:
   1. Red Fire Alarm.
   2. Yellow Feeders: 600V and above.
   3. Orange Feeders: 277V and < 600V.
   4. White Feeders: 120V to 240V.
   5. Blue Building Automation.
   6. Green Grounding systems

3.6 PROTECTION

A. Protect coatings, finishes, and cabinets from damage and deterioration.
B. Repair damage to galvanized finishes with zinc-rich paint recommended by manufacturer.
C. Repair damage to paint finishes with matching touchup coating recommended by manufacturer.
D. Repair damage to PVC coatings with matching touchup coating recommended by manufacturer

END OF SECTION 26 11 10

SECTION 26 11 05 – WIREWAYS

PART 1 - GENERAL

1.1 RELATED DOCUMENTS

A. Section 23 00 00 - Special Requirements for Mechanical and Electrical Work shall apply.

B. Section 23 00 50 - Vibration Isolation and Seismic Restraints for HVAC, Fire Protection, Electrical and Plumbing.

1.2 RELATED WORK SPECIFIED ELSEWHERE

A. Conduits, Fittings and Supports: Section 26 11 10

PART 2 - PRODUCTS

2.1 Wireways shall be provided where shown on the contract drawings. Wireways shall be code gauge steel with an ANSI-61 grey enamel finish over a cleaned, treated and primed surface. Covers shall be combination hinged and screw fastened type.

2.2 Approved manufacturers shall be Square D, Wiremold or Isoduct.

END OF SECTION 26 11 05

SECTION 26 11 10 – CONDUIT, FITTINGS AND SUPPORTS

PART 1 - GENERAL

1.1 RELATED DOCUMENTS

A. All of the Project "General Documents" apply to work specified in this Section: consult them in detail for applicable instructions.

B. Manufacturers referenced in the technical specifications are for the purpose of establishing a standard of quality. Alternate manufacturers providing the same quality equipment will be given consideration by the Engineer and Architect if they are notified in writing per General Conditions.

C. Section 23 00 00 - Special Requirements for Mechanical and Electrical Work shall apply.

D. Section 23 00 50 - Vibration Isolation and Seismic Restraints for HVAC, Fire Protection, Electrical and Plumbing.

1.2 RELATED WORK SPECIFIED ELSEWHERE

A. Pull and Junction Boxes: Section 26 13 10.

PART 2 - PRODUCTS

2.1 MATERIALS AND COMPONENTS

A. Rigid galvanized steel conduit shall be in conformance with Federal Specification WWG-581D and A.S.A. C-80.1

B. Intermediate metal conduit shall be in accordance with Federal Specification WW-C-281.

C. Electrical metallic tubing shall be in accordance with Federal Specification WW-C563 and UL-797.

D. Liquid-tight flexible metal conduit shall consist of a core of flexible galvanized steel tubing over which is extruded a liquid-tight jacket of polyvinyl chloride (PVC). In locations where a separate green insulated grounding conductor is not required, and total length does not exceed 6 ft., liquid-tight flexible conduits not larger than 1-1/4 inch size shall be provided with a continuous copper bonding conductor wound spirally between the convolutions.

E. Schedule 40 PVC shall be in accordance with ASTM D-2241 or D1725.

F. Flexible metal conduit shall be in accordance with Federal Specification WW-C-566 and UL-360.

G. Fittings and couplings for intermediate metal conduit shall be threaded.

H. Bushings for intermediate metal conduit 1-1/4 inch and larger shall be of the threaded grounding insulated type. The insulating inserts shall be of thermosetting plastic or fiber material which conforms to the flame test requirements of U.L. 514, molded or locked into the metallic body of the fitting. Conduit bushings made entirely of non-metallic material

shall not be used. The grounding means may be either pressure type wire terminals or copper grounding lugs.

I. Couplings and connectors for EMT shall be made of steel only, rain and concrete tight and shall be gland and ring compression type, Steel City TC-700 or TK-100 Series or approved. All connectors shall have insulated throats. Fittings using set screws or indentations as a means of attachment shall not be used. Fittings larger than 2 inch shall be concrete tight only.

J. Fittings for liquid-tight flexible conduit shall be in accordance with Federal Specification W-F-406b and UL-360 incorporating a threaded grounding cone, a steel or plastic compression ring and a gland for tightening. Fittings shall be made of steel only with insulated throats. Fittings shall be Steel City "LT" Series or approved.

K. Fittings for flexible metal conduit shall be in accordance with Federal Specification W-F-406b and UL-360 made of steel and having insulated throats. Fittings shall be Steel City SC-220, XC-240 or XC-400 Series, or approved.

L. Die-cast zinc-alloy fittings shall not be used on any type of raceway.

M. Expansion Fittings shall be as follows:

1. Type A - Deflection and Expansion Fittings - Crouse Hinds type XD or O.Z. type DX.

2. Type B - Expansion Fitting - Spring City type EF or O.Z. type EX.

N. Conduit Sleeves:

1. Sleeves shall be galvanized steel, cast iron, plastic or ductile iron pipe when they are located in concrete walls, foundations or floors. In other locations, sleeves shall be constructed of 22 gauge galvanized sheet metal having lock seam joints.

O. Conduit Supports:

1. Pipe straps shall be Type I, Style A or B in accordance with Federal Specification FF-S-760a.

2. Individual and multiple pipe hangers and riser clamps including all parts and hardware shall be hot-dipped galvanized throughout. All U-bolts, clamps, attachments and hardware for hanger assembly and conduits shall be provided. Each multiple hanger shall be designed to support a load equal to or greater than the sum of the weights of the conduits, wires and hanger itself, plus 200 pounds.

3. Hangers and hardware shall be in accordance with Federal Specification WW-H-171d.

P. Conduits and Fittings shall be Allied Tube and Conduit Corp., Triangle Conduit and Cable Co., or Carlon Products.

Q. Aluminum conduit will not be allowed.

2.2 UTILIZATION

A. Intermediate metal conduit shall be used for risers, feeders where installed in concrete and exposed to weather.

B. Electrical metallic tubing may be used above hung ceilings, in partitions, in exterior walls above grade and where exposed within the interior of building. Set screw connectors shall be used.

C. Flexible conduit (AC, MC or Greenfield) will be limited to short motor connections, and short connections to recessed lighting fixtures. Length of flexible connection shall be limited to 6 feet for lights and eighteen inches for motors and transformers. Liquid tight flexible conduit shall be used for all equipment connections in mechanical rooms and on building exterior. Liquid tight shall be limited to eighteen inches.

D. PVC conduit shall be used for all underground feeders only U.O.I.

PART 3 - EXECUTION

3.1 GENERAL REQUIREMENTS

A. All conduit and raceways shall be installed concealed, except where shown to be run exposed on the drawings. In exterior cavity walls, conduits may cross the cavity, but may not run along the cavity.

B. The outside diameter of any conduit buried in concrete shall not exceed one third of the thickness of the structural slab, wall or beam in which it is placed. The conduit shall be located entirely within the middle third of the member. Lateral spacing of conduits buried in concrete slabs shall be not less than three diameters except where the concrete slab has been specially designed to accommodate a closer spacing of conduits.

C. Conduit runs shall be mechanically and electrically continuous from service entrance to all outlets. Unless otherwise specified, each conduit shall enter and be connected to a cabinet, junction box, pull box or outlet box by means of locknuts on the inside and outside and a bushing on the inside or by means of a liquid tight, threaded, self-locking, cold-weld type wedge adapter. All locknuts shall be the bonded type with sharp edges for digging in to the metal all of an enclosure and shall be installed to assure a locking installation. Locknuts and bushings or self-locking adapters will not be required where conduits are screwed into tapped connections. Vertical runs of conduits terminating in the bottoms of boxes or cabinets shall be protected from the entrance of foreign material prior to the installation of conductors by blank disc or plugs.

D. Conduit system shall be installed complete before any conductors are drawn in. Each run of conduit shall be blown through and swabbed before conductors are installed.

E. Where conduits turn up out of concrete slabs and are not concealed by wall construction, bends shall be carefully made so that no portion of the radius is above floor.

F. From an accessible approved raceway, outlet or junction box located above a suspended ceiling to recessed lighting fixtures, provide flexible metallic conduit at least 4 feet and not more than 6 feet in length. Conductors in flexible conduit connections to fixtures, pendants or suspended fluorescent fixtures and interconnecting wiring between multiple unit fixtures installed in fixture wireways shall be considered branch circuit conductors for the purpose of this specification.

G. The size of each run of conduit or EMT shall be the larger of the following:

1. The minimum size, which shall be 3/4 inch unless otherwise specified for particular item or system.

2. The size noted on the Drawings.

3. The size required by the NFPA-70 to accommodate the number, size and type of wires shown, specified or required. Note exception above for the use of 3/4 inch conduit.

H. Not more than the equivalent of four 90-degree bends will be permitted in any conduit run. Pullboxes shall be furnished and installed where necessary to meet this requirement.

3.2 INSTALLATION

A. Conduit:

1. Exposed runs of conduits shall be run parallel with the lines of the building. Conduits shall not be hung on hangers with any other services and where possible shall be hung above all other services. Coordinate hanger locations with those of other trades so that hangers are aligned and form a neat appearance.

   Exact location of electric outlets, conduits and appurtenances shall be coordinated so that there will be no interferences with other services.

2. Conduits shall be independently supported so that no strain will be transmitted to outlet and pull boxes. Supports shall be rigid enough to prevent distortion of conduit during wire pulling.

3. Conduits shall not come into direct contact with any mechanical system piping or ducts.

4. Provide and set conduit sleeves to accommodate conduits passing through foundations, walls, floors and partitions.

5. Provide flashing and sealing making watertight joints where conduits pass through roof or waterproofing membranes.

6. Maintain minimum 6 inches clearance at heat sources and all mechanical equipment.

7. Conduits which are installed at this time and left empty for future use and which are 5' or more in length, including all telephone and communication conduits, shall have a #12 bare non-ferrous or nylon draw wire left in place for future use. All empty conduits including conduit stubs shall be tagged at all exposed ends with tags identifying the location of the end of conduit.

B. Conduit and Equipment Supports:

1. Electric conduits and other raceways shall not be hung on hangers with any other service or ceilings support wires and shall be hung above all other service pipes

unless otherwise shown on the contract drawings. No other service shall be permitted to use supports for electrical work.

2. Vertical runs of conduits not over 15 feet long shall be supported by hangers placed not over one foot from the elbows on the connecting horizontal runs.

3. Vertical runs of conduit over 15 feet long but not over 60 feet long and not over 4 inches in size, shall be supported on heavy steel clamps. Clamps shall be bolted tightly around the conduits and shall rest securely on the building structure without blocking.

   Clamps shall be type 4, Federal Specification

   WW-H-171C unless other types are approved.

4. Wire or perforated strapping shall not be used for hanging conduit or equipment.

5. Conduits and raceways above suspended hung ceilings shall be supported from the structure above totally independent of the ceiling support system.

6. All conduit runs suspended vertically longer than 12" or whose I.D. is greater than 2 1/2" shall be horizontally braced. Conduits whose I.D. is less than 2 1/2" shall not be horizontally braced.

C. Conduit Sleeves:

1. Interior wall, floor and partition sleeves:

   a. Each sleeve shall be at least two (2) conduit sizes larger than the conduit passing through the sleeve. Terminate the sleeve flush with walls, floors or partitions.

   b. The space around the conduit in the sleeve shall be packed with a non-combustible material whose minimum fire rating equals the rating of the wall, floor or partition through which the sleeve penetrates. Non-combustible material shall be Chase Technology Corporation CTC PR-855 fire stop.

D. Expansion Fittings:

1. Each conduit that is buried in or secured to the building construction on opposite sides of a building expansion joint and each long run of exposed conduit when required shall be provided with an expansion fitting.

2. All conduits run underground and located outside where as the riser protrudes from the ground, these risers shall be provided with expansion fittings to account for thermal expansion, ie. at service CT cabinet. Refer to NEC 300.7.

3. In addition to the grounded ring, a separate grounding conductor shall be provided as herein specified under Section 16450. Free ends of conduits in expansion joints shall be provided with insulated bushings.

E. Fittings:

1. Three-piece threaded couplings, Steel City EK-400 series or approved equal, shall be used to join two conduits coming together from opposite directions when standard threaded couplings cannot be used. Only steel fittings shall be used with steel conduits.

2. Conduit nipples with running threads shall not be used. Split couplings shall not be used unless specifically approved by the Engineer for use in locations where standard couplings cannot be employed.

3.3 CLOSING OF OPENINGS

A. Wherever slots, sleeves or other openings are provided in floors or walls for the passage of conduits or other forms of raceway, such openings, if unused, or if there is space left in such openings after installation of the conduit and raceways, shall be filled.

B. Filling materials for openings in floors or walls shall be fire-resistive, with a rating equal to the material of the floor or wall itself and finished so as to prevent passage of water, smoke and fumes.

C. Where conduits passing through openings are exposed in finished rooms, the finish of the filling material shall match and be flush with the adjoining floor, ceiling or wall finishes.

D. Where unused sleeves or slots are provided for future installation of conduit or other raceways they shall be identified by means of approved metal tags and then capped.

E. The filling material shall be Chase Technology Corporation "Chase-Foam" type CTC PR-855 silicone foam fire stop or approved equal.

END OF SECTION 26 11 10

SECTION 26 12 00 – WIRES AND CABLES (600V AND BELOW)

PART 1 - GENERAL

1.1 RELATED DOCUMENTS

A. Section 23 00 00 - Special Requirements for Mechanical and Electrical Work shall apply.

B. Section 23 00 50 - Vibration Isolation and Seismic Restraints for HVAC, Fire Protection, Electrical and Plumbing.

1.2 REFERENCE STANDARDS

A. Provide wire and cable comprised of copper conductors in accordance with ASTM and IPCEA Standards.

1.3 DELIVERY AND HANDLING

A. Deliver to the job all wire and cable in complete coils, boxes or reels with the manufacturer's name and approval tag attached. Tag to indicate wire size and type of insulation.

PART 2 - PRODUCTS

2.1 MATERIALS

A. 600 Volt Wire

1. Wiring #10 AWG and smaller and all control and alarm wiring shall be solid conductor copper with type THWN-2 insulation rated 600-volt, 75 degrees centigrade in dry and wet locations.

2. Wiring #8 AWG and larger shall be stranded copper having THWN-2 insulation, rated 600-volt, 75 degrees centigrade in dry and wet locations.

3. Where required the following types of insulation shall be provided and shall meet the requirements specified below:

a. Type AVA shall be in accordance with Federal Specifications J-C-30.

b. Type SF-2 shall be 2/65-inch-thick silicone rubber, 125-degree centigrade minimum, with outer covering of heat-resisting glass braid.

4. The covering of wires and cables designed to meet the above specification shall have distinctive markings so that they may be readily identified in the field. The covering of the individual conductors shall have a distinctive color code for identification of individual conductors.

5. All conductors for feeders shall be identified throughout by color coding by use of color insulated conductors or by use of Scotch No. 35 color coding tape applied to conductors.

B. MC Cables

1. Type MC Cable is constructed with soft-drawn copper, Type THHN/THWN conductors rated 75°C dry available in sizes 14 AWG through 2 AWG, and a green insulated grounding conductor. The conductors are cabled together and a binder tape bearing the print legend is wrapped around the assembly. Aluminum interlocking armor is applied over the assembly.

2. Type MC Cable meets or exceeds the requirements of the following:
   a. UL 83 • UL 1569 • UL 1685
   b. UL Online Product Guide Info - Metal-Clad Cable (PJAZ) (www.ul.com)
   c. Federal Specification A-A59544 (formerly J-C-30B) • FT4/IEEE 1202 (70,000 Btu/hr) Vertical Cable Tray Flame Test
   d. NFPA 70 (National Electrical Code), Article 330
   e. Listed for use in UL 1, 2 and 3 Hour Through Penetration Firestop Systems
   f. REACH/RoHS-2 (Chemical Limit) Compliant

C. Cable Splicing and Terminating Fittings:

1. Splices and joints in wiring #10 AWG and smaller shall be made mechanically and electrically secure with mechanical pressure type splicing devices as manufactured by 3M Company, Buchanan, or approved equal.

2. Connectors for splicing No. 14 AWG and smaller stranded or No. 18 AWG or smaller solid conductors shall be crimp or pressure indent type. Exception to the above is the connection of lighting fixtures to the branch circuit supply conductors, which shall be mechanical pressure type splicing devices as hereinbefore specified. Temperature rating of connectors shall be at least equal to that of the wire on which they are used.

3. Splices and taps of conductors #8 AWG or larger, all splices in motor terminal junction boxes and all cable terminations at transformers, shall be made using compression connectors, requiring the use of compression tools for securing the conductors in the connectors. Termination of conductors at all distribution equipment except transformers shall be made using mechanical lugs. Connectors shall be of high conductivity corrosion-resistant material and have actual contact area that shall provide at least the current carrying capacity of the wire of cable. For conductors #1/0 and larger, connector lugs shall be of the two hole type. Connector lugs shall be bolted to bussing using Belleville washers in combination with flat washers and nuts. Compression connectors shall be as manufactured by Thomas & Betts, Burndy, MAC Products, or approved equal.

4. Connectors for splices and taps shall be insulated with a self-fusing rubber insulating tape that is non-corrosive to the connector and the conductor. Insulation tape shall have a minimum of 350 volts per mil dielectric strength and shall further meet the requirements of Federal Specifications HH-I-553. Friction tape shall be applied directly over the rubber insulating tape.

5. Insulating materials for splices and connections, shall be of the type for the particular use, location, voltage and shall be applied and installed in accordance with the manufacturer's recommendations.

PART 3 - EXECUTION

3.1 INSTALLATION

A. Wires and cables connected to equipment operating at 100 to 250 volts shall be rated at 600 volts minimum unless otherwise indicated or specified. Where specified or where the operating voltage is less than 100 volts, the wires or cables may be insulated for 300 volts, provided they are completely isolated from other higher voltage systems. Cables for wiring the various special distribution systems, are individually specified under their respective paragraph headings.

B. Wires and cables for feeders and branch circuit shall be single conductor unless otherwise specified. Branch circuit wiring, connected to receptacles and lighting switches employing No. 12 AWG wires shall be solid conductor.

C. Commercially produced wire lubricant may be utilized to ease wire pulling. However, any such lubricant shall be of a type to produce no deteriorating effect on conductor insulation or on the interior of associated wireway and shall be approved by the wire manufacturer.

D. Wire Pulling and Cable Supports:

1. Installation equipment shall be provided to prevent cutting and abrasion of conduits during the pulling of feeders. Ropes used for pulling of feeders shall be made of polyethylene or other non-metallic material.

2. Fish wires and lines shall be free of splices and shall have ample exposed length at each end.

3. Pulling lines shall be attached to conductor cables by means of either woven basket grips or pulling eyes attached directly to the conductors. Rope hitches shall not be used. All cables to be installed in a single conduit shall be pulled in together.

4. Cable supports and boxes shall be installed for all vertical feeders in accordance with the schedule in the National Electrical Code and as shown.

E. Cable Splicing and Terminations:

1. No splices or joints will be permitted in either feeder or branch circuits except at outlets or accessible junction boxes.

2. Connectors shall be insulated by integral or separate covers by means of taping with plastic or rubber and friction tapes to provide insulating equal to that of the conductors being joined.

F. Non-ferrous identifying tags shall be securely fastened to all cables, in pull and splice boxes and at terminations. Tags shall be stamped or embossed to correspond with markings on drawings or marked so that cable may be readily identified. If suspended type tags are provided, they shall be attached by approximately 1/32 inch diameter nylon 55 pound test mono-filament line attached to tag, using three twist, clinch knot or especially designed slip-free plastic cable lacing unit. Tagging for fireproofed cables shall include cable size, type of cable insulation, temperature rating and cable manufacturer's name.

3.2 GENERAL WIRING METHODS

A. Wiring shall be provided complete from point of service connection in all receptacles, lighting fixtures, power outlets for future extensions and other devices as shown. Slack wire shall be provided for all future connections. Unless otherwise specified, branch circuit conductors shall be No. 12 AWG or larger. In outlet boxes for future installations, ends of wires shall be taped and blank covers installed.

B. Cables shall not be bent either permanently or temporarily during installation to radii unless than that recommended by the manufacturer.

C. Conductors not larger than No. 10 AWG located in branch circuit panelboards, signal cabinets, signal control boards and panelboards shall be bundled. Conductors larger than No. 10 AWG located in panels and pullboxes shall be cabled in individual circuits. Bundling and cabling shall be done with straps made of self-extinguishing nylon. Each strap shall be constructed with a locking hub or head on one end and a taper on the other.

D. Where the length of a homerun, from panel to first circuit, exceeds 100 feet for a 120-volt circuit, the conductor sizes shall be No. 10 AWG. Where the length of a homerun, from panel to first circuit, exceeds 200 feet for a 120-volt circuit, the conductor sizes shall be No. 8 AWG.

E. Where homerun circuit numbers are shown, such numbers shall be followed in connecting circuits to panelboards. Each branch circuit homerun containing two or more circuits with a common neutral shall be connected to the circuit breaker or switch in a three or four-wire branch circuit panelboard so that no two of the circuits will be fed from the same phase.

F. Feeder, main and branch circuit wiring for power and light distribution, also common and section wires for the special systems shall be tagged and identified. Nomenclature shall be in accordance with symbols and designations shown on the drawings.

G. Channel support members for suspended type lighting fixtures shall not be utilized for building branch circuit wiring unless specified otherwise. Connections between units in continuous rows shall be made within the fixture wire way.

END OF SECTION 26 12 00

SECTION 26 13 10 – PULL AND JUNCTION BOXES

PART 1 - GENERAL

1.1 RELATED DOCUMENTS

A. Section 23 00 00- Special Requirements for Mechanical and Electrical Work shall apply.

B. Section 23 00 50 - Vibration Isolation and Seismic Restraints for HVAC, Fire Protection, Electrical and Plumbing.

PART 2 - PRODUCTS

2.1 JUNCTION BOXES

A. Junction boxes having internal volumes of not over 150 cubic inches shall be as specified under Section 26 13 40, Outlet Boxes, including grounding terminals, but not including other details applicable only to lighting fixtures, switches or receptacle outlet boxes. They shall have blank covers.

B. Junction boxes having internal volume of more than 150 cubic inches shall be as specified under "PULL BOXES" of corresponding sizes.

2.2 PULL BOXES

A. Pull boxes shall conform to the requirements of the National Electric Code. Unless otherwise specified pull boxes having internal volumes of not more than 150 cubic inches shall be as specified under Section 16134, except that they shall be provided with blank covers. Details applicable only to boxes for lighting fixtures, receptacles and switches shall not apply. Unless otherwise specified, pull boxes having internal volumes of more than 150 cubic inches shall be constructed as specified under "CABINETS", except that covers shall be of the same thickness as the boxes and shall be secured by corrosion resistant screws or bolts.

B. Pull boxes exposed to rain or installed in wet locations shall be of the cast vapor tight type.

C. Pull boxes connected to concealed conduits shall be provided with access by means of an approved access door.

D. All ferrous pull boxes in damp locations shall be hot dipped galvanized. All other ferrous pull boxes shall be fabricated of galvanized sheet steel and painted with rust inhibiting paint after pickling. Finish of galvanized sheet pull boxes shall be ANSI-61 Grey Enamel.

PART 3 - EXECUTION

3.1 INSTALLATION

A. Junction Boxes:

1. Junction boxes shall be installed so that covers are readily accessible after completion of the installation.

2. Junction boxes shall be installed above suspended ceilings, except where the ceiling is of the removable type or definite provision is made for access at a point close to each box.

3. Junction boxes from which flexible connections are run to lighting fixtures in suspended ceilings shall face to the side of the access opening and shall be independently suspended from the floor construction above.

B. All enclosures shall be sized to accommodate the specified terminal lugs so that conductors are bent to radii not less than that recommended by the cable manufacturers.

C. Where concealed conduits are to be connected to a surface mounted cabinet, a flush cabinet backplate shall be provided with an accessible opening of size to match the pull box.

D. Where conduits enter the building and do not terminate directly in an enclosure or cabinet, a pull box shall be installed on the inside of the building in an accessible approved located for conduit termination.

E. Additional pull boxes shall be provided wherever necessary to meet code requirement for maximum lengths of conduit runs and maximum number of ends as specified under Section 16111.

F. Each pull box shall be provided with clamps, grids or other supports to which cables shall be secured so that no cable will have an unsupported length of more than 30 inches.

G. Sheet metal pull box shall be supported to maintain shape. Larger boxes shall be formed for structural steel bracing welded into a rigid assembly to maintain alignment in shipment and installation.

END OF SECTION 26 13 10

SECTION 26 13 40 – OUTLET BOXES

PART 1 - GENERAL

1.1 RELATED DOCUMENTS

A. Section 23 00 00 - Special Requirements for Mechanical and Electrical Work shall apply.

B. Section 23 00 50 - Vibration Isolation and Seismic Restraints for HVAC, Fire Protection, Electrical and Plumbing.

1.2 RELATED WORK SPECIFIED ELSEWHERE

A. Wiring devices: Section 26 14 00.

PART 2 - PRODUCTS

2.1 MATERIALS

A. Outlet boxes shall be in accordance with Federal Specification W-J-800c. Square cornered and straight side gang boxes, 4-inch octagon concrete rings and 4-inch octagon hung ceiling boxes with bars may be of the folded type. All boxes installed in plenum ceilings shall be of the one-piece deep drawn type.

B. Threaded hub type outlet boxes shall be in accordance with Federal Specification W-C-586z.

C. Outlet boxes in the following locations shall be of the hot dipped galvanized cast iron, threaded hub type, with gasketed weatherproof stainless-steel covers:

1. Interior locations were exposed to moisture laden atmosphere.

2. Where specifically called for on plans or in details.

3. Outlet boxes for vapor proof fixtures.

D. Box depths greater than 2-1/8 inches shall not be used for obtaining the necessary volume, but may be used to facilitate the installation. Octagonal hung ceilings boxes having suspension bars shall be 3-1/2 inches deep. Rectangular boxes for interconnection of branch circuit conduits shall be 2-1/2 inches deep.

E. Outlet boxes, except as specified above, for wall switches and receptacles shall be not less than 4 inches square by 1-1/2 inches deep for multi-gang boxes. Outlet boxes for switches and receptacles surface mounted on unfinished walls shall be threaded hub type with covers to fit the devices.

F. Where conduits are concealed, outlet boxes for ceiling fixtures and interior bracket fixtures shall not be smaller than 4 inches in diameter by 1-1/2 inches deep. Plaster covers for bracket fixtures shall have openings approximately 3 inches in diameter. Where conduits are exposed, outlet boxes for ceiling fixtures and bracket fixtures shall be threaded hub type to provide a seat for the fixture canopy. Outlet boxes for lamp receptacles shall be similar to outlet boxes for bracket fixtures, except that diameters and covers shall suit the lamp receptacles specified.

G. Outlet boxes for telephone and signal shall be of the type herein before specified for switch and receptacle outlets, unless otherwise noted or indicated.

H. Outlet boxes for future conduit extensions shall be not less than 4 inches square by 1-1/2 inches deep and shall be provided with extension rings and blank covers. Extension rings shall be fully exposed and all side knockouts shall be unused for future conduit connections.

I. Outlet boxes mounted in ceramic tile, wood bases, fabric wall panels, marble and other similar wall materials shall have square corner device cover plates.

PART 3 - EXECUTION

3.1 INSTALLATION

A. Outlet boxes shall be provided with only the conduit openings necessary to accommodate the conduits at the individual locations. Each box shall be large enough to accommodate the required number and sizes of conduits, wires and splices in accordance with National Electric Code requirements. The necessary volume shall be obtained in each case by using a box of the proper dimensions and not by the use of an extension ring.

B. Outlet boxes shall be fastened in position, using any of the fasteners, except powder driven type, specified under Section 16111. Outlets in suspended ceilings occurring at locations other than at main ceiling support members shall be provided with auxiliary metal cross members suspended directly from building structure.

C. Ceiling outlet boxes for suspended lighting fixtures shall be accurately located in the exact positions required for the fixture stems that will carry the conductors to be fixture housings.

D. Outlet boxes for future conduit extensions shall be installed flush unless otherwise noted.

E. Floor outlet boxes installed in concrete floors slabs shall be completely enveloped in concrete except at top.

F. Section or field fabricated gang boxes shall not be used.

G. The mounting heights of the various electric outlets shall, in general, be as shown on the drawings or as given below. In certain locations, the required heights will vary in order to accommodate equipment being located in tile work, to be located properly in the architectural design or as otherwise indicated on the electrical drawings. In such cases, the exact location shall be as shown on architectural detail drawings, or shall be determined at the building site by the Architect's representative.

END OF SECTION 26 13 40

SECTION 26 14 00 – WIRING DEVICES

PART 1 - GENERAL

1.1 RELATED DOCUMENTS

A. Section 23 00 00 - Special Requirements for Mechanical and Electrical Work shall apply.

B. Section 23 00 50 - Vibration Isolation and Seismic Restraints for HVAC, Fire Protection, Electrical and Plumbing.

1.2 RELATED WORK SPECIFIED ELSEWHERE

A. Nameplates and Device Plate Markings: Section 26 05 50.

1.3 SUBMITTALS

A. Submit product data in accordance with General and Special Conditions.
B. All device colors shall be approved by architect prior to ordering and installation.

PART 2 – PRODUCTS

2.1 GENERAL

A. Provide, where indicated by symbol, tamper proof/safety-type, isolated ground, and specification grade wiring devices conforming to NEMA requirements.

2.2 MATERIALS

A. Switches shall be as follows:

1. Single pole, double pole, three-way, four-way and lock type switches shall be rated 20 amperes, 277 volts, back and side wired. Switches shall be Hubbell Style Line specification Grade Rocker Switches, or equivalent.

2. Momentary contact switches shall be SPDT center off unless otherwise noted and rated 20 amperes, 277 volts, back and side wires, Hubbell No. 1557, or equivalent Pass & Seymour or Arrow Hart.

3. Pilot light switches shall be of the lighted handle type arranged to light when the switch is in the "on" position. Switch shall be rated 20 amperes, 277 volts back and side wired. Switches shall be Hubbell No. 1297, or equivalent Pass & Seymour or Arrow Hart.

4. Key operated switches shall be of the same type specified above, except with key operator in lieu of handle operator. All key operated switches shall be of the same code throughout the building. A total of twenty five keys shall be provided to the Owner.

B. Receptacle outlets: "Commercial Grade". Use red devices on "emergency" circuits. Refer to symbol legend.

1. 20A, 125V, 2 pole, 3 wire grounding, duplex: NEMA 5-20R; Hubbel Style Line or equivalent.

2. Weatherproof receptacles: 15A, 125V, 3 wire grounding, duplex, with cast metal double lift cover plate for type "FS" cast metal boxes, including gasket; Hubbell No. 5206.

3. GFI type duplex receptacles: With built-in ground fault interruption, 5=ma sensitivity, indicator and reset. U/L listed, 15A, 125V, 3 wire; Hubbel No. GF8300.

2.3 DEVICE PLATES

A. Device plates for concealed wiring: Same manufacturer as devices, to suit device covered, single or ganged in one piece with beveled edges that match faces of plates.

1. Flush, brushed-finish, type 302 stainless steel.

2. Narrow plates for hollow metal jamb posts: Arrow- Hart No. T-1650 or Bryant, stainless steel.

B. Device plates for surface type cast-metal boxes: Cadmium plated cast ferrous metal designed for application.

2.4 OTHER APPROVED MANUFACTURERS

A. Hubbel, Pass & Seymour, Leviton and GE

PART 3 - EXECUTION

3.1 INSTALLATION

A. Center outlets with regard to paneling, furring, trim, etc. unless otherwise indicated.

B. Where several outlets occur in a room, symmetrically arrange them unless otherwise indicated.

C. Any outlet which is improperly located must be corrected at Contractor's expense.

D. Set outlets plumb or horizontal and extending to finished surface or wall, ceiling or floor as case may be without projecting beyond same.

E. Install receptacles, switches, etc., shown on wood trim, cases or other fixtures symmetrically unless other indicated. Where necessary, set with long dimension of plate horizontal, or gang in tandem.

END OF SECTION 26 14 00

SECTION 26 15 00 – 480V SWITCHBOARD

PART 1 - GENERAL

1.1 RELATED DOCUMENTS

A. Section 23 00 00 - Special Requirements for Mechanical and Electrical Work shall apply.

B. Section 23 00 50 - Vibration Isolation and Seismic Restraints for HVAC, Fire Protection, Electrical and Plumbing.

1.2 SECTION INCLUDES

A. Distribution Switchboard - Furnish and install the Distribution Switchboard(s) as herein specified and shown on the associated electrical drawings.

1.3 REFERENCES

The switchboard and overcurrent protection devices referenced herein are designed and manufactured according to the following appropriate specifications.

A. ANSI/NFPA 70 - National Electrical Code (NEC).
B. ANSI/IEEE C12.16 - Solid State Electricity Metering.
C. ANSI C57.13 - Instrument Transformers.
D. NEMA AB 1 - Molded Case Circuit Breakers and Molded Case Switches.
E. NEMA PB 2 - Deadfront Distribution Switchboards, File E8681
G. NEMA PB 2.1 - Proper Handling, Installation, Operation and Maintenance of Deadfront Switchboards Rated 600 Volts or Less.
H. NEMA PB 2.2 - Application Guide for Ground Fault Protective Devices for Equipment.
I. UL 50 - Cabinets and Boxes.
J. UL 98 - Enclosed and Dead Front Switches.
K. UL 489 - Molded Case Circuit Breakers.
L. UL 891 - Dead-Front Switchboards.
M. UL 943 - Ground Fault Circuit Interrupters.
N Federal Specification W-C-375B/Gen - Circuit Breakers, Molded Case, Branch Circuit And Service.

1.4 SUBMITTALS

A. Shop Drawings shall indicate front and side enclosure elevations with overall dimensions shown; conduit entrance locations and requirements; nameplate legends; one-line diagrams; equipment schedule; and switchboard instrument details.

B. The following information shall be submitted to the Engineer:
1. Master drawing index
2. Front view elevation
3. Floor plan
4. Top view
5. Single line
6. Schematic diagram
7. Nameplate schedule
8. Component List
9. Conduit entry/exit locations

1.5 QUALIFICATIONS

A. To be considered for approval, a manufacturer shall have specialized in the manufacturing and assembly of switchboards for at least fifty (50) years.
B. Furnish products listed by Underwriters Laboratories Incorporated and in accordance with standards listed in Article 1.03 - References.
C. The manufacturing facility shall be registered by Underwriters Laboratories Inc. to the International Organization for Standardization ISO 9002 Series Standards for quality.

1.6 DELIVERY, STORAGE, AND HANDLING

A. Deliver, store, protect, and handle products in conformance with manufacturer's recommended practices as outlined in applicable Installation and Maintenance Manuals.
B. Each switchboard section shall be delivered in individual shipping splits for ease of handling. They shall be individually wrapped for protection and mounted on shipping skids.
C. Inspect and report concealed damage to carrier within their required time period.
D. Store in a clean, dry space. Maintain factory protection and/or provide an additional heavy canvas or heavy plastic cover to protect structure from dirt, water, construction debris, and traffic. Where applicable, provide adequate heating within enclosures to prevent condensation.
E. Handle in accordance with NEMA PB 2.1 and manufacturer's written instructions. Lift only by lifting means provided for this express purpose. Handle carefully to avoid damage to switchboard internal components, enclosure, and finish.

1.7 ENVIRONMENTAL REQUIREMENTS

A. Conform to NEMA PB 2 service conditions during and after installation of switchboards.

1.8 MAINTENANCE MATERIALS

A. Provide one (1) set of installation and maintenance instructions with each switchboard. Instructions are to be easily identified and affixed within the incoming or main section of the line-up.

1.9 WARRANTY

A. Manufacturer shall warrant equipment to be free from defects in materials and workmanship for the lesser of one (1) year from date of installation or eighteen (18) months from date of purchase.

PART 2 - PRODUCTS

2.1 MANUFACTURERS

A. Shall be Square D, Eaton or Siemans companies or approved equal.

2.2 SWITCHBOARD – GENERAL

A. Short Circuit Current Rating: Switchboards shall be rated with a minimum short circuit current rating of 100,000 rms symmetrical amperes at 480 VAC maximum.
C. Future Provisions: All unused spaces provided, unless otherwise specified, shall be fully equipped for future devices, including all appropriate connectors and mounting hardware.

D. Enclosure: Type 3R.
   1. Sections shall be aligned front and rear.
   2. Removable steel base channels (1.5 inch floor sills) shall be bolted to the frame to rigidly support the entire shipping section for moving on rollers and floor mounting.
   3. The switchboard enclosure shall be painted on all exterior surfaces. The paint finish shall be a medium gray, ANSI #49, applied by the electro-deposition process over an iron phosphate pre-treatment.
   4. All front covers shall be screw removable with a single tool and all doors shall be hinged with removable hinge pins.
   5. Top and bottom conduit areas shall be clearly indicated on shop drawings.

E. Nameplates: Provide 1-inch-high x 3 inches engraved laminated (Gravoply) nameplates for each device. Furnish black letters on a white background for all voltages.

F. Bus Composition: Shall be plated copper. Plating shall be applied continuously to all bus work. The switchboard bussing shall be of sufficient cross-sectional area to meet UL Standard 891 temperature rise requirements. The phase [and neutral] through-bus shall have an ampacity as shown in the plans. For 4-wire systems, the neutral shall be of equivalent ampacity as the phase bus bar. Tapered bus is not acceptable. Full provisions for the addition of future sections shall be provided. Bussing shall include all necessary hardware to accommodate splicing for future additions.

G. Ground Bus: Copper sized per NFPA70 and UL 891 Tables 25.1 and 25.2 and shall extend the entire length of the switchboard. Provisions for the addition of future sections shall be provided.

2.2a SWITCHBOARD - INCOMING MAIN SECTION DEVICES

A. Main Circuit Breaker
   Molded case main and tie protective devices shall be fixed mounted molded case circuit breakers, 1600A.

B. All main breakers shall be UL listed for continuous application in their intended enclosures for 100% of their continuous ampere rating.

C. All main circuit breakers shall have a minimum symmetrical interrupting capacity of 100,000 amperes. Main and tie circuit breakers shall have 3 cycle short-time withstand ratings.

D. All main molded case circuit breakers shall be UL489 listed.

E. All molded case circuit breakers shall have a nameplate clearly marking any electrical accessories that are mounted in the breaker at the time of sale. The accessory shall have a label that will indicate its function and voltage. All accessories shall be modular, plug and lock type, and UL listed for easy field installation.

F. Each molded case circuit breaker shall be equipped with a true RMS sensing, solid-state tripping system consisting of at least three current sensors microprocessor-based trip device and trip actuator. The trip unit shall use microprocessor-based technology to provide the basic adjustable time-current protection.

G. Provide trip units with integral arc flash reduction mode (ARMS) to meet NEC Article 240.87. The use of ZSI to satisfy NEC 240.87 does not meet the intent of these specifications and will not be acceptable as a substitution.

H. System coordination shall be provided by adjusting rotary switches for the following microprocessor-based time-current curve shaping adjustments:

I. Adjustable long-delay pick-up setting with minimum of 10 settings

J. Adjustable long-delay time - 0.5 to 24 seconds

K. Adjustable short-delay pick-up setting – 1.5x to Max allowable by frame

L. Adjustable short-delay time 0.0 sec up to 0.5 sec depending on frame with selectable flat or I2t curve shaping

M. Adjustable instantaneous setting 2x to Max allowable by frame
N. Provide adjustable ground fault current pickup (0.2 – 1.0 x In in 0.10x increments) and time (0.1 – 1.0 sec in 0.10sec increments), with selectable flat or I2t curve shaping. Provide switch selectable options for GF OFF, GF alarm, or GF trip.
O. Provide 100% rated UL listed circuit breakers.
P. Trip units shall be capable of metering phase, neutral, and ground current with an accuracy of +/- 2.0% of the reading.
Q. Trip units shall have an integral, high-resolution liquid-crystal display (LCD) capable of displaying the trip unit programming, status, and monitoring information including bar graph display.

2.2b SWITCHBOARD - DISTRIBUTION SECTION DEVICES

A. Group mounted circuit breakers.
1. Circuit breaker(s) shall be group mounted plug-on with mechanical restraint on a common pan or rail assembly.
2. The interior shall have three flat bus bars stacked and aligned vertically with glass reinforced polyester insulators laminated between phases. The molded polyester insulators shall support and provide phase isolation to the entire length of bus.
3. Circuit breaker(s) equipped with line terminal jaws shall not require additional external mounting hardware. Circuit breaker(s) shall be held in mounted position by a self-contained bracket secured to the mounting pan by fasteners. Circuit breaker(s) of different frame sizes shall be capable of being mounted across from each other.
4. Line-side circuit breaker connections are to be jaw type.
5. All unused spaces provided, unless otherwise specified, shall be fully equipped for future devices, including all appropriate connectors and mounting hardware.
6. Thermal magnetic molded case circuit breakers.
a. Molded case circuit breakers shall have integral thermal and instantaneous magnetic trip in each pole.
b. Provide Ground Fault Circuit Interrupt type breakers where indicated on plans. Provide coordination with main breaker.

2.2c MISCELLANEOUS DEVICES

A. Control power transformers with primary and secondly protection shall be provided, as indicated on the drawings, or as required for proper operation of the equipment. (Control power transformers shall have adequate capacity to supply power to the transformer cooling fans).

B. Each section of the switchboard shall be provided with a space heater (thermostatically controlled). Power for the space heaters shall be obtained (from a control power transfer within the switchboard from a source listed on the drawings). Supply voltage shall be (120) (140) volts AC.

2.2d UTILITY METERING

A. Where indicated on the drawings, furnish a barrier to separate the utility metering compartment complete with hinged sealable door. Bus work shall include provisions for mounting utility company current transformers and potential transformers or potential taps as required by the utility company. Provide service entrance label and provide necessary applicable service entrance features per NEC and local code requirements.

2.2e. A. OUTDOOR NEMA 3 ENCLOSURE

1. Outdoor enclosure shall be non-walk-in and meet applicable NEMA 3$ UL requirements.
2. Enclosure shall have sloping roof downward toward rear.
3. Outer sections shall be the same widths as indoor structures, except each end of the outdoor assembly shall have an end trim.
4. The enclosure shall be provided with rear hinged doors for each section.
5. Doors shall have provisions for padlocking.
6. Ventilating openings shall be provided complete with replaceable fiber glass air filters.

2.2f. NAMEPLATES

A. Engraved nameplates, mounted on the face of the assembly, shall be furnished for all main and feeder circuits as indicated on the drawings. Nameplates shall be plastic, black characters on white background. Characters shall be 3/16-inch high, minimum. Nameplates shall give item designation and circuit well as frame ampere size and appropriate trip rating. Furnish master nameplate giving switchboard designation, voltage ampere rating, short-circuit rating, manufacturer's name, general order number, and item number.

B. Control components mounted within the assembly, such as fuse blocks, relays,pushbuttons, switches, etc., shall be suitably marked for identification corresponding to appropriate designations on manufacturer's wiring diagrams.

2.2g. FINISH

A. All exterior and interior steel surfaces of the switchboard shall be properly cleaned and provided with a rust-inhibiting phosphatized coating. Color and finish of the switchboard shall be ANSI 61 light gray.

2.3 ACCESSORIES

A. For switchboards installed outdoor only, provide thermostatically-controlled electric heaters in each section. Provide terminals for separate source connection of heater power circuit. Voltage Rating: 480 V. Provide control power transformer with the total VA rating of the electric heaters in the switchboard.

PART 3 - EXECUTION

3.1 FACTORY TESTING

A. The following standard factory tests shall be performed on the equipment provided under this section. All tests shall be in accordance with the latest version of ANSI and NEMA standards.

1. The switchboard shall be completely assembled, wired, adjusted, and tested at the factory. After assembly, the complete switchboard will be tested for operation under simulated service conditions to ensure the accuracy of the wiring and the functioning of all equipment. The main circuits shall be given a dielectric test of 2200 volts for one (1) minute between live parts and ground, and between opposite polarities. The wiring and control circuits shall be given a dielectric test of 1500 volts for one (1) minute between live parts and ground

B. The manufacturer shall provide three (3) certified copies of factory test reports.

3.2 MANUFACTURER'S CERTIFICATION

A. A certified test report of all standard production tests shall be available to the Engineer upon request.

3.3 INSPECTION

A. Examine area to receive switchboard to provide adequate clearance for switchboard installation.
B. Check that concrete pads are level and free of irregularities. ‘
C. Start work only after unsatisfactory conditions are corrected.

3.4 INSTALLATION

A. Install switchboard in accordance with manufacturer’s written guidelines, the NEC, and local codes.

3.5 FIELD QUALITY CONTROL

A. Inspect completed installation for physical damage, proper alignment, anchorage and grounding.
B. Measure, using a Megger, the insulation resistance of each bus section phase to phase and phase to ground for one minute each, at minimum test voltage of 1000VDC; minimum acceptable value for insulation resistance in 1 megohms. NOTE: Refer to manufacturer’s literature for specific testing procedures.
C. Check tightness of accessible bolted bus joints using calibrated torque wrench per manufacturer’s recommended torque values.

3.6 ADJUSTING

A. Adjust all operating mechanisms for free mechanical movement per manufacturers specifications.
B. Tighten bolted bus connections in accordance with manufacturer’s instructions.

3.7 CLEANING

A. Touch up scratched or marred surfaces to match original finish.

END OF SECTION 26 15 00

SECTION 26 16 00 – PANELBOARDS

PART 1 – GENERAL

1.1 RELATED DOCUMENTS

A. Section 23 00 00 - Special Requirements for Mechanical and Electrical Work shall apply.

B. Section 23 00 50 - Vibration Isolation and Seismic Restraints for HVAC, Fire Protection, Electrical and Plumbing.

1.2 RELATED WORK SPECIFIED ELSEWHERE

A. Wiring Devices: Section 26 14 00.

1.3 SUBMITTALS

A. Submit shop drawings and product data in accordance with the General Conditions.

1.4 REFERENCE STANDARDS

A. All distribution, power and lighting panelboards and motor control centers shall be rated for the intended voltage and shall be in accordance with Underwriters' Laboratories, Inc., standards for panelboards and standards for cabinets. Panelboard boxes shall be so labeled. Panelboards shall also comply with NEMA Standard for Panelboards, and Federal Specifications W-P-115a, Type I, Class I where applicable. Circuit breakers shall conform to the requirements of Federal Specification W-C-375b, except with modifications specified herein.

PART 2 - PRODUCTS

2.1 GENERAL

A. Dead-front panelboards incorporating the number, rating and type of circuit breakers or fused switches as noted herein and as shown on the contract drawings shall be provided in general purpose enclosures for either surface or flush mounting.

B. All panels shall be provided with a circuit directory frame and card with clear plastic covering on the inside of the panel door. All circuit designations must be typed on the card prior to job completion.

C. Panelboards and circuit breakers shall be as manufactured by Square D, General Electric, Eaton or Siemans.

2.2 CIRCUIT BREAKER DISTRIBUTION PANELS

A. Bussing Assembly and Temperature Rise:

Panelboard bus structure and main lugs or main breaker shall have current ratings as shown on the panelboard schedule. Such ratings shall be established by heat rise tests with maximum hot spot temperature on any connector or bus bar not to exceed 50

Degrees C rise above ambient. Heat rise tests shall be conducted in accordance with Underwriters Laboratories Standard UL 67. The use of conductor dimensions will not be accepted in lieu of actual heat tests. All busses shall be copper, including the solid neutral and ground bar.

B. Circuit Breakers:

Circuit breakers shall be equipped with individually insulated braced and protected connectors. The front faces of all circuit breakers shall be flush with each other. Large, permanent, individual circuit numbers shall be affixed to each breaker in a uniform position. Tripped indication shall be clearly shown by the breaker handle taking a position between "ON" and "OFF". Provisions for additional breakers shall be such that no additional connectors will be required to add breakers.

C. Integrated Equipment Short Circuit Rating:

Each panelboard, as a complete unit, shall have a short circuit rating equal to or greater than the integrated equipment rating shown on the panelboard schedule or on the plans. This rating shall be established by testing with the overcurrent devices mounted in the panelboard. The short circuit tests on the overcurrent devices and on the panelboard structure shall be made simultaneously by connecting the fault to each over-current device with the panelboard connected to its rated voltage source. Method of testing shall be per Underwriters Laboratories Standard UL 67.
The source shall be capable of supplying the specified panelboard short circuit current or greater. Testing of panel- board overcurrent devices for short circuit rating only while individually mounted is not acceptable. Also, testing of the bus structure by applying a fixed fault to the bus structure alone is not acceptable. Panelboards shall be marked with their maximum short circuit current rating at the supply voltage and shall be UL listed.

D. Cabinet:

Panelboard assembly shall be enclosed in a steel cabinet. The rigidity and gauge of steel to be as specified in UL Standard 50 for cabinets. The size of wiring gutters shall be in accordance with UL Standard 67. Cabinets to be equipped with latch and tumbler-type lock on door of trim. Doors over 48" long shall be equipped with three-point latch and vault lock. All locks shall be keyed alike. Endwalls shall be removable. Fronts shall be coded gauge steel.The paint finish shall be ANSI #49 applied by the electro-deposition process over an iron phosphate pretreatment. Furnish to owner (2) keys per panelboard.

E. Safety Barriers:

The panelboard interior assembly shall be dead front with panelboard front removed. Main lugs or main breakers shall have barriers on five sides. The barrier in front of the main lugs shall be hinged to a fixed part of the interior. The end of the bus structure opposite the mains shall have barriers.

F. UL Listing:

Panelboards shall be listed by the Underwriters Laboratories and shall bear the UL label. When required, panelboards shall be suitable for use as service equipment. Panelboards shall be I-LINE panelboards from Square D or approved equal.

2.3 POWER PANELS

A. Circuit Breakers:

Circuit breakers shall be Square D Type EHB bolt-on thermal magnetic, molded case circuit breakers. Breakers shall be 1, 2 or 3 pole with an integral crossbar to assure simultaneous opening of all poles in multipole circuit breakers. Breakers shall have an overcenter, trip-free, toggle-type operating mechanism with quick-make, quick-break action and positive handle indication. Handles shall have "ON", "OFF", and "TRIPPED" positions. In addition, trip indication shall include a VISI-TRIP indicator appearing in the window of the breaker case. Bolt-on circuit breakers shall be able to be installed in the same panelboard without requiring additional mounting hardware.

Circuit breakers shall be UL listed in accordance with UL Standard 489 and shall be rated 120 volts AC (single pole, 15 to 60 amperes) or 208Y/120 volts AC (2 and 3 pole, 15 to 100 amperes) with continuous current ratings as noted on the plans. Interrupting ratings shall be 14,000 RMS symmetrical amperes at 120 volts AC (single pole) or 208 volts AS (2 and 3 pole). Single pole, 15 and 20 ampere circuit breakers intended to switch fluorescent lighting loads on a regular basis shall carry the SWD marking.

B. Bussing Assembly and Temperature Rise:

Panelboard copper bus structure and main lugs or main current breaker shall have current rating as shown on the panelboard schedule. Such ratings shall be established by heat rise tests, conducted in accordance with UL Standard 67. Bus structure shall be insulated. Bus bar connections to the branch circuit breakers shall be the "distributed phase" or phase sequence type and shall accept bolt-on circuit breakers only. All current carrying parts of the bus structure shall be plated.

C. Cabinets and Fronts:

The panelboard bus assembly shall be enclosed in a steel cabinet. The rigidity and gauge of steel to be as specified in UL Standard 50 for cabinets. Wiring gutter space shall be in accordance with UL Standard 67 for panelboards.

The box shall be fabricated from galvanized steel or equivalent rust resistant steel. Each front shall include a door and have a flush, cylinder tumbler-type lock with catch and spring-loaded stainless steel door pull. All panelboard locks shall be keyed alike. Fronts shall have adjustable indicating trim clamps which shall be completely concealed when the doors are closed. Doors shall be mounted with completely concealed steel hinges. Fronts shall not be removable with door in the locked position. 600 amp panelboard fronts shall have exposed trim clamps. Column width fronts shall have exposed hinges and be screw cover type. A circuit directory frame and card with a clear plastic covering shall be provided on the inside of the door.

D. Integrated Equipment Short Circuit Rating:

Each panelboard, as a complete unit, shall have a short circuit current rating equal to or greater than the integrated equipment rating shown on the panelboard schedule or on the plans. This rating shall be established by testing with the overcurrent devices mounted in the panelboard. The short circuit tests on the overcurrent devices and on the panelboard structure shall be made simultaneously by connecting the fault to each overcurrent

device with panelboard connected to its rated voltage source. Method of testing shall be per Underwriters' Laboratories Standard UL 67. The source shall be capable of supplying the specified panelboard short circuit current or greater. Testing of panelboard overcurrent devices for short circuit rating only while individually mounted is not acceptable. Also, testing of the bus structure by applying a fixed fault to the bus structure alone is not acceptable. Panelboards shall be marked with their maximum short circuit current rating at the supply voltage and shall be UL listed.

E. UL Listing:

Panelboards shall be listed by Underwriters Laboratories and shall bear the UL label. When required, panelboards shall be suitable for use as service equipment. Panelboards shall be Square D Type NEHB or approved equal.

2.4 BRANCH CIRCUIT PANELS

A. Circuit breakers shall be Square D Type QOB (bolt-on) thermal magnetic, molded case circuit breakers. Breakers shall be 1, 2 or 3 pole with an integral crossbar to assure simultaneous opening of all poles in multipole circuit breakers. Breakers shall have an over-center, trip-free, toggle-type operating mechanism with quick-make, quick-break action and positive handle indication. Handles shall have "ON", "OFF", and "TRIPPED" positions. In addition, trip indication shall include a VISI-TRIP indicator appearing in the window of the breaker case.

Bolt-on circuit breakers shall be able to be installed in the panelboard without requiring additional mounting hardware. Circuit breakers shall be UL listed in accordance with UL Standard 489 and shall be rated 240 volts AC maximum with continuous current ratings as noted on the plans. Interrupting ratings shall be 10,000 RMS symmetrical amperes maximum at 240 volts AC maximum. Single pole, 15 and 20 ampere circuit breakers intended to switch fluorescent lighting loads on a regular basis shall carry the SWD marking.

B. Bussing Assembly and Temperature Rise:

Panelboard copper bus structure and main lugs or main circuit breaker shall have current ratings as shown on the panelboard schedule. Such ratings shall be established by heat rise tests, conducted in accordance with UL Standard 67. Bus structure shall be insulated. Bus bar connections to the branch circuit breakers shall be the "distributed phase" or phase sequence type and shall accept bolt-on (QOB) circuit breakers only. All current carrying parts of the bus structure shall be plated.

C. Cabinets and Fronts:

The panelboard bus assembly shall be enclosed in a steel cabinet. The rigidity and gauge of steel to be as specified in UL Standard 50 for cabinets. Wiring gutter space shall be in accordance with UL Standard 67 for panelboards. The box shall be fabricated from galvanized steel or equivalent rust resistant steel.

Each front shall include a door and have a flush, cylinder tumbler-type lock with catch and spring-loaded stainless steel door pull. All panelboard locks shall be keyed alike. Fronts shall have adjustable indicating trim clamps which shall be completely concealed when the doors are closed. Doors shall be mounted with completely concealed steel hinges. Fronts shall not be removable with door in the locked position. Column width

fronts shall have exposed hinges and be screw cover type. A circuit directory frame and card with a clear plastic covering shall be provided on the inside of the door.

D. Integrated Equipment Short Circuit Rating:

Each panelboard, as a complete unit, shall have a short circuit current rating equal to or greater than the integrated equipment rating shown on the panelboard schedule or on the plans. This rating shall be established by testing with the overcurrent devices mounted in the panelboard. The short circuit tests on the overcurrent devices and on the panelboard structure shall be made simultaneously by connecting the fault to each overcurrent device with panelboard connected to its rated voltage source. Method of testing shall be per Underwriters Laboratories Standard UL 67. The source shall be capable of supplying the specified panelboard short circuit current or greater. Testing of panelboard overcurrent devices for short circuit rating only while individually mounted is not acceptable. Also, testing of the bus structure by applying a fixed fault to the bus structure alone is not acceptable. Panelboards shall be marked with their maximum short circuit current rating at the supply voltage and shall be UL listed.

E. UL Listing:

Panelboards shall be listed by Underwriters Laboratories and shall bear the UL label. When required, panelboards shall be suitable for use as service equipment. Panelboards shall be Square D Type NQOD or approved equal.

PART 3 - EXECUTION

3.1 INSTALLATION

A. Panelboards mounting height shall be a maximum of six feet, six inches to center of the top circuit breaker.

B. Surface mounted panelboards for other than masonry walls shall be supported from floor slab to ceiling slab and secured with "Kindorf" or "Unistrut" channels.

C. Prepare and affix typewritten directory to inside cover of panelboard indicating loads controlled by each circuit.

D. Furnish and turn over to owner (2) keys per each panelboard installed.

3.2 APPROVED MANUFACTURERS

A. Square D
B. Siemens
C. General Electric
D. Eaton

END OF SECTION 26 16 00

SECTION 26 17 00 – LOW VOLTAGE TRANSFORMERS

PART 1 - GENERAL

1.1 RELATED DOCUMENTS

A. Drawings and general provisions of the Contract, including General and Supplementary Conditions and Division 01 Specification Sections, apply to this Section.

1.2 SUMMARY

A. This Section includes the following types of dry-type transformers rated 600 V and less, with capacities up to 1000 kVA:
   1. Distribution transformers.

1.3 SUBMITTALS

A. Product Data: Include rated nameplate data, capacities, weights, dimensions, minimum clearances, installed devices and features, and performance for each type and size of transformer indicated.
B. Shop Drawings: Detail equipment assemblies and indicate dimensions, weights, loads, required clearances, method of field assembly, components, and location and size of each field connection.
   1. Wiring Diagrams: Power, signal, and control wiring.

1.4 INFORMATIONAL SUBMITTALS

A. Source quality-control test reports.
B. Field quality-control test reports.
C. Submit Letter of Compliance with DOE.
D. Submit certification of sound level compliance.

1.5 CLOSEOUT SUBMITTALS

A. Operation and Maintenance Data: For transformers to include in emergency, operation, and maintenance manuals.

1.6 QUALITY ASSURANCE

A. Source Limitations: Obtain each transformer type through one source from a single manufacturer.
B. Electrical Components, Devices, and Accessories: Listed and labeled as defined in NFPA 70, Article 100, by a testing agency acceptable to authorities having jurisdiction, and marked for intended use.
C. Comply with IEEE C57.12.91, "Test Code for Dry-Type Distribution and Power Transformers."
D. Comply with most current edition of the Northwestern University Design Standards.

1.7 DELIVERY, STORAGE, AND HANDLING

A. Temporary Heating: Apply temporary heat according to manufacturer's written instructions within the enclosure of each ventilated-type unit, throughout periods during

which equipment is not energized and when transformer is not in a space that is continuously under normal control of temperature and humidity.

1.8 PROJECT CONDITIONS

A. Installation Pathway: Remove and replace building components and structures to provide pathway for moving transformers into place.
B. Product Selection for Restricted Space: Drawings indicate maximum dimensions for transformers, including clearances between transformers and adjacent surfaces and other items. Comply with indicated maximum dimensions.
C. Environmental Limitations: Rate equipment for continuous operation under the following conditions, unless otherwise indicated:
   1. Ambient Temperature: Not exceeding 40 deg C.
   2. Altitude: Not exceeding 6600 feet (2010 m).

1.9 COORDINATION

A. Coordinate size and location of concrete bases with actual transformer provided. Cast anchor-bolt inserts into bases. Concrete, reinforcement, and formwork requirements are specified in Division 03 Sections.

1.10 WARRANTY

A. Comply with Division 1 requirements.
B. Special Warranty: Manufacturer agrees to repair or replace Transformers that fail in materials or workmanship within specified warranty period.
   1. Warranty Period: **Six** years from date of Beneficial Occupancy.

PART 2 – PRODUCTS

2.1 MANUFACTURERS

A. Subject to compliance with requirements, provide products by one of the following:
   1. Eaton Corp. Electrical Group
   2. Square D.
   3. Siemens Inc.

2.2 GENERAL TRANSFORMER REQUIREMENTS

A. Description: Factory-assembled and -tested, air-cooled units for 60-Hz service.
B. Cores: Grain-oriented, non-aging silicon steel.
C. Coils: Continuous windings without splices except for taps.
   1. Internal Coil Connections: Terminals shall be welded to the leads of the coils. Terminals shall not be spot welded or bolted to the coil leads.
   2. Coil Material: Electrical grade Copper.

2.3 DISTRIBUTION TRANSFORMERS

A. Comply with NEMA ST 20 and list and label as complying with UL 1561.
B. Cores: One leg per phase.
C. Enclosure, Indoors: Ventilated, NEMA 250, Type 2.
   1. Core and coil shall be encapsulated within resin compound, sealing out moisture and air.

D. Transformer Enclosure Finish: Comply with NEMA 250.
   1. Finish Color: ANSI 61 gray.
E. Taps for Transformers 25 kVA and Larger: Two 2.5 percent taps above and four 2.5 percent taps below normal full capacity.
F. Insulation Class: 150 kVA and above - 220 deg C, UL-component-recognized insulation system with a maximum of 80 deg C rise above 40 deg C ambient temperature; 45 – 112.5 kVA and above - 220 deg C, UL-component-recognized insulation system with a maximum of 115 deg C rise above 40 deg C ambient temperature; 30 kVA and below - 180 deg C, UL-component-recognized insulation system with a maximum of 150 deg C rise above 40 deg C ambient temperature.
G. Energy Efficiency for Transformers Rated 15 kVA and Larger:
   1. Comply with DOE 2016.
H. K-Factor Rating: Transformers indicated to have a K-factor rating of K-13 and above shall comply with UL 1561 requirements for non-sinusoidal load current-handling capability to the degree defined by designated K-factor. Cores shall not be “oversized” to accommodate harmonics.
   1. Unit shall not overheat when carrying full-load current with harmonic distortion corresponding to designated K-factor.
   2. Indicate value of K-factor on transformer nameplate.
   3. The neutral bus shall be configured to accommodate 200% of the rated current.
I. Electrostatic Shielding: Each winding shall have an independent, single, full-width copper electrostatic shield arranged to minimize inter-winding capacitance.
   1. Arrange coil leads and terminal strips to minimize capacitive coupling between input and output terminals.
   2. Include special terminal for grounding the shield.
   3. Shield Effectiveness:
      a. Capacitance between Primary and Secondary Windings: Not to exceed 33 picofarads over a frequency range of 20 Hz to 1 MHz.
      b. Common-Mode Noise Attenuation: Minimum of minus 120 dBA at 0.5 to 1.5 kHz; minimum of minus 65 dBA at 1.5 to 100 kHz.
      c. Normal-Mode Noise Attenuation: Minimum of minus 52 dBA at 1.5 to 10 kHz.
J. Low-Sound-Level Requirements: Minimum of 3 dBA less than NEMA ST 20 standard sound levels when factory tested according to IEEE C57.12.91.

2.4 IDENTIFICATION DEVICES

A. Nameplates: Engraved, laminated-plastic or metal nameplate for each distribution transformer, mounted with corrosion-resistant screws. B. Nameplate shall identify Transformer ID, primary voltage; secondary voltage; “Fed From…” and “Feeds…” shall be included.
B. Nameplates and label products are specified in Division 26 Section "Identification for Electrical Systems."

2.6 SOURCE QUALITY CONTROL

A. Test and inspect transformers according to IEEE C57.12.91.
B. Factory Sound-Level Tests: Conduct sound-level tests on equipment for this Project.

PART 3 - EXECUTION

3.1 EXAMINATION

A. Examine conditions for compliance with enclosure- and ambient-temperature requirements for each transformer.
B. Verify that field measurements are as needed to maintain working clearances required by NFPA 70 and manufacturer's written instructions.
C. Examine floors, roofs, and concrete bases for suitable mounting conditions where transformers will be installed.
D. Verify that ground connections are in place and requirements in Division 26 Section "Grounding and Bonding for Electrical Systems" have been met. Maximum ground resistance shall be 5 ohms at location of transformer.
E. Proceed with installation only after unsatisfactory conditions have been corrected.

3.2 INSTALLATION

A. Construct concrete bases 4 inches larger than the footprint of the unit and 4 inches high (Evanston: 6” high east of Sheridan Rd.) for floor mounted transformers and anchor transformers to pad according to manufacturer's written instructions and requirements in Northwestern University Design Standards.
B. Do not install transformers in ceiling cavities or wall hang.

3.3 CONNECTIONS

A. Connection to Transformers: Flexible Metallic Conduit (FMC), primary and secondary.
B. Ground equipment according to Division 26 Section "Grounding and Bonding for Electrical Systems."
C. Connect wiring according to Division 26 Section "Low-Voltage Electrical Power Conductors and Cables."
    1. External cable shall be rated 90 degrees C (sized at 75 degrees C ampacity) for encapsulated and 75 degrees C for ventilated designs. Connectors should be selected on the basis of the type and cable size used to wire the specific transformer.
    2. Verify tightness and torque all accessible bolted electrical connections to manufacturer’s specified values using a calibrated torque wrench.

3.4 IDENTIFICATION

A. Nameplates: Label each Transformer with a nameplate complying with requirements for identification specified in Division 26 Section "Identification for Electrical Systems," including identification of the transformer, voltage characteristics, “Fed From…” and “Feeds…”.

3.5 FIELD QUALITY CONTROL

A. Manufacturer's Field Service: Engage a factory-authorized service representative to inspect, test, and adjust components, assemblies, and equipment installations, including connections. Report results in writing.
B. Perform tests and inspections and prepare test reports.
C. Tests and Inspections:
    1. Perform each visual and mechanical inspection and electrical test stated in NETA Acceptance Testing Specification. Certify compliance with test parameters.

D. Remove and replace units that do not pass tests or inspections and retest as specified above.
E. Test Labeling: On completion of satisfactory testing of each unit, attach a dated and signed "Satisfactory Test" label to tested component.
F. Transformers shall not be permanently energized until all test reports have been submitted and approved by NU Electric Shop.

3.6 ADJUSTING

A. Record transformer secondary voltage at each unit for at least 48 hours of typical occupancy period. Adjust transformer taps to provide optimum voltage conditions at secondary terminals. Optimum is defined as not exceeding nameplate voltage plus 10 percent and not being lower than nameplate voltage minus 3 percent at maximum load conditions. Submit recording and tap settings as test results.
B. Output Settings Report: Prepare written report recording output voltages and tap settings. Submit to University Electric Shop.

3.7 CLEANING

A. Vacuum dirt and debris; do not use compressed air to assist in cleaning.

END OF SECTION 26 17 00

SECTION 26 44 00 – DISCONNECT SWITCHES

PART 1 - GENERAL

1.1 RELATED DOCUMENTS

A. Section 23 00 00 - Special Requirements for Mechanical and Electrical Work shall apply.

B. Section 23 00 50 - Vibration Isolation and Seismic Restraints for HVAC, Fire Protection, Electrical and Plumbing.

1.2 SECTION INCLUDES

Switches shall be furnished and installed at locations as shown on the drawings. Switches shall be of the type approved, indicated and specified herein.

1.3 REFERENCES

Switches shall be manufactured in accordance with the following standards:

A. UL98, Enclosed and Dead Front Switches

B. NEMA KS1 Enclosed Switches

C. NEMA 250 Enclosures for Electrical Equipment

1.4 SERVICE ENTRANCE

A. Switches identified for use as service equipment are to be labeled for this application.

1.5 SUBMITTALS

Provide outline drawings with dimensions, and equipment ratings for voltage, amperage, horsepower and short circuit.

1.6 RELATED WORK SPECIFIED ELSEWHERE

A. Fuses: Section 26 48 00.

B. Nameplates and Device Plate Markings: Section 26 05 50.

1.7 REQUIREMENTS OF REGULATORY AGENCIES

A. Conform to NFPA 70 and applicable inspection authority.

PART 2 - PRODUCTS

2.1 MANUFACTURERS

A. Switches shall be manufactured by Square D Company, Siemans, or Westinghouse.

2.2 SWITCH INTERIOR

A. All switches shall have switch blades which are visible when the switch is OFF and the cover is open. Type 1, 3R.

B. Lugs shall be front removable and UL listed for 75°C conductors (30-100 ampere), 75°C conductors (200-1200 ampere).

C. 30 through 100 ampere fusible switches shall be equipped with factory installed fuse pullers.

D. All current carrying parts shall be plated to resist corrosion.

E. Switches shall have removable arc suppressor to facilitate easy access to line side lugs.

F. Switches shall have provisions for a field installable electrical interlock.

2.3 SWITCH MECHANISM

A. Switch operating mechanism shall be quick-make, quick-break such that, during normal operation of the switch, the operation of the contacts shall not be capable of being restrained by the operating handle after the closing or opening action of the contacts has started.

B. The operating handle shall be an integral part of the box, not the cover, Type 1, 3R.

C. Provisions for padlocking the switch in the OFF position with at least three padlocks shall be provided.

D. The handle position shall travel at least 90º between OFF and ON positions to clearly distinguish and indicate handle position, Type 1, 3R.

E. All switches Type 1, 3R shall have a dual cover interlock mechanism to prevent unintentional opening of the switch cover when the switch is ON and prevent turning the switch ON when the cover is open. The cover interlock mechanism shall have an externally operated override but the override shall not permanently disable the interlock mechanism.

The tool used to override the cover interlock mechanism shall not be required to enter the enclosure in order to override the interlock.

2.4 SWITCH ENCLOSURES

A. Switch covers shall be attached with welded pin-type hinges (Type 1), top hinged, attached with removable screws and securable in the open position (Type 3R).

B. The enclosure shall be finished with Gray baked enamel paint which is electrodeposited on cleaned, phosphate pre-treated steel (Type 1), Gray baked enamel paint which is electrodeposited on cleaned, phosphate pre-treated galvannealed steel (Type 3R).

C. The enclosure shall have ON and OFF markings stamped into the cover (Type 1, 3R).

D. The operating handle shall be provided to with a dual colored, red/black position indication, (Type 1, 3R).

E. All switches shall have provisions to accept up to three 3/8" hasp padlocks to lock the operating handle in the OFF position.

F. Tangential knockouts shall be provided to facilitate ease of conduit entry Type 1, 3R, for switches rated 30_200A.

G. Enclosures for Type 3R switches through 200 ampere shall have provisions for interchangeable bolt-on hubs in the top end wall. Hubs shall be Square D B-Type hubs sized as indicated on the plans.

2.5 SWITCH RATINGS

A. Switches shall be horsepower rated for ac and/or dc as indicated on the plans.

B. The UL listed short circuit current rating of the switches shall be: 10,000 rms symmetrical amperes when used with or protected by Class H or K fuses (30-600 ampere) 200,000 rms symmetrical amperes when used with or protected by Class R or Class J fuses (30-600 ampere switches employing appropriate fuse rejection schemes). 200,000 rms symmetrical amperes when used with or protected by Class L fuses (800-1200 ampere).

END OF SECTION 26 44 00

SECTION 26 45 00 – GROUNDING

PART 1 - GENERAL

1.1 RELATED DOCUMENTS

A. Section 23 00 00 - Special Requirements for Mechanical and Electrical Work shall apply.

B. Section 23 00 50 - Vibration Isolation and Seismic Restraints for HVAC, Fire Protection, Electrical and Plumbing.

1.2 RELATED WORK SPECIFIED ELSEWHERE

A. Wire and cables: Section 26 12 00.

1.3 SUBMITTALS

A. Submit shop drawings and product data in accordance with the General Conditions.

1.4 REFERENCE STANDARDS

A. The electrical system shall be grounded as specified herein, but in no case shall the grounding be less than the requirements of the NEC.

PART 2 - PRODUCTS

2.1 A. The grounding conductors shall be insulated copper wire of the size indicated, but not smaller than No. 12 AWG.

B. All un-insulated grounding conductors buried in earth without raceway shall be tinned copper conductors.

C. Inaccessible grounding connections shall be made with the exothermic welding process using equipment as manufactured by Burndy, Erico Products, Copperweld, Weaver or approved equal.

D. Ground rods shall be 3/4" diameter by 10'-0" long driven copped weld rods with top 12" below finished grade.

PART 3 - EXECUTION

3.1 GENERAL

A. Ground conductors shall be installed in raceways with feeders and branch circuits as shown on the drawings.

B. Separate ground conductors shall be installed in all lighting and receptacle branch circuits where armored cable is utilized.

C. Grounding jumpers shall be provided across metal parts which are separated by non-conducting materials or joined so that there is a high resistance at the joints.

D. Grounding cable shall not be buried directly in concrete, but a conduit sleeve shall be provided where cable passes through concrete.

3.2 GROUND SOURCE

A. Ground source shall consist of copper ground rods and counterpoise loops as shown on the drawings. A connection to the cold water main piping, on the street side of the water meter shall serve as a supplementary ground source.

B. Provide grounding jumpers around building water meter, main water valve, domestic water tank fill pump and other locations where the domestic water tank fill line is not electrically continuous.

C. All ground sources shall be connected to the 2"x1/4" ground bus mounted on the electric room wall. All switchgear ground buses shall be connected to this ground bus with a separate cable at each end of each bus.

D. Maximum resistance to ground shall be limited to 5 ohms. Additional ground rods shall be driven if required to maintain this level. Maximum ground rod resistance to earth shall be 25 ohms.

3.3 SYSTEM GROUNDS

A. Neutral bus in service switchboards shall be provided with an approved bus link. On the line side of this bus link, the neutral bus shall be connected to the switchboard ground bus with a 1/4"x2" copper bus.

3.4 EQUIPMENT GROUNDING

A. Raceways entering the bottom of switchboards and motor control centers shall be provided with grounding type bushings. An insulated conductor of capacity indicated, but not smaller than #6 AWG, shall be connected between each grounding bushing and the ground bus in the board or control center.

B. Panelboards, terminal cabinets and feeder pullboxes shall be provided with ground lugs. An insulated conductor of required size shall e connected between the ground lug and the ground bar (where indicated) in each panel. Feeder ground wires shall terminate in each ground lug before passing through pullboxes and in each panel. Where pullboxes contain barriers, a ground lug shall be provided in each section, brazed to the box.

C. Motors shall be grounded by means of a grounding conductor in the same raceway with the motor feeder connected to a grounding bushing at the motor terminal box and the ground bus in the motor control center or to the incoming conduit ground lug (or grounding bushing where no lug is provided) or an individually mounted motor starter.

D. Wherever flexible conduit is used for part of a conduit run, a grounding conductor shall be provided in the conduit and connected to grounding bushings or bus at each end of run.

E. All polyphase equipment shall be grounded by means of a grounding conductor run in the same raceway with the feeder. Connect the grounding conductor to the ground bus of the panelboard and the equipment ground lug or grounding bushing, where no ground lug is provided.

F. Except for armored cable, flexible conduit, or indicated otherwise, the grounding medium for all lighting branch circuits, 120 volt receptacle circuits shall be the conduit system. All locknut connections to cabinets, pullboxes, junction boxes, etc., shall be drawn upon sufficiently tight to assure a continuous metal-to-metal bond.

END OF SECTION 26 45 00

SECTION 26 45 50 LIGHTNING PROTECTION SYSTEM

PART 1 - GENERAL

1.1 SCOPE

A. The work under this section includes all labor, material, equipment and related services necessary to upgrade or reinstall the roof level portion of an existing lightning protection system.

1.2 RELATED DOCUMENTS

A. Section 23 00 00 - Special Requirements for Mechanical and Electrical Work shall apply.
B. Section 23 00 50 - Vibration Isolation and Seismic Restraints for HVAC, Fire Protection, Electrical and Plumbing.
C. Section 26 45 00 – Grounding and Bonding for Electrical Systems

1.3 REFERENCE STANDARDS

NFPA 780 - Standard for the Installation of Lightning Protection Systems
UL 96A - Standard for Installation Requirements for Lightning Protection Systems
UL 96 – Standard for Lightning Protection Components

1.4 DESIGN AND INSTALLATION CRITERIA

A. Lightning protection system shall be designed, furnished and installed in compliance with the specifications and standards of the most current editions of NFPA 780, UL 96 and UL 96A, and shall meet the materials, design and installation requirements of the Underwriters Laboratories, Inc. Master Label Program for lightning protection systems. Note: The UL Master Label Certification process is NOT required for this project.
B. If any departures from the contract documents are deemed necessary by the Contractor, details of such departures and the reasons therefore shall be submitted as soon as practicable to the Architect/Engineer for approval. No such departures shall be made without the prior written approval of the contracting officer and the DFD Representative.
C. After installation, submit a written report certifying that the lightning protection system is up to the indicated current standards.

1.5 QUALIFICATIONS OF EQUIPMENT MANUFACTURER AND DESIGNING/INSTALLING FIRM

A. Manufacturer: Equipment manufacturer shall be listed with Underwriters Laboratories, Inc. as a lightning protection equipment manufacturer. Minimum 10 years' experience.
B. Designer/Installer: Lightning protection system shall be designed and installed by a contractor that is listed with Underwriters Laboratories for lightning protection. Minimum 10 years' experience.

1.6 SUBMITTALS

A. Shop Drawings:
1. Shop drawings shall be submitted for all materials provided under this Section.
2. Submit installation drawings showing the type, size and location of all equipment, ground connections and cable routings, etc.
3. Samples shall be submitted to Architect/Engineer for approval upon request.
4. After the completion of the project, and prior to final payment, submit: Written statement from the Installer that the roof level portion of the installation would qualify for a UL "Master Label", if other portions of the lightning protection system, not disturbed under this project, were eligible for such certification. Statement shall be provided on Installer's letterhead stationery.

1.7 GUARANTEE

A. Guarantee for one year after acceptance by the DFD Representative all equipment, materials and workmanship to be free from defect.
B. Provide replacement parts for components found defective at no extra cost to the Owner.

PART 2 - PRODUCTS

2.1 MATERIALS

A. All components shall be listed and labeled for compliance with UL 96 – Standard for Lightning Protection Components.
B. Installer shall provide and install any new components necessary to replace existing damaged or missing components, and components to upgrade system as required.
C. New products shall be as follows for all new work except over existing or new aluminum metal flashing. Installation over new aluminum or to connect to existing aluminum lightning protection cabling shall comply with acceptable products and methods for such installations.
D. Air Terminals: solid copper, blunt tip with copper or cast copper/bronze bases and stainless steel bolt-pressure cable connectors.
E. Main and Down Conductors: UL listed, Class I or Class II Copper. Main conductors shall have cross-sectional area of 65,000 circular mils minimum.
F. Cable Connectors: Cast copper/bronze with bolt-pressure type stainless steel bolts and nuts. Cast or stamped crimp fittings are unacceptable.
G. Fasteners: Non-corrosive, sizes and lengths to suit conditions.
H. Other products, not specifically described, but required for a complete and proper installation of the work in this section shall be selected by the Contractor subject to the approval of the Architect/Engineer.

PART 3 - EXECUTION

3.1 INSTALLATION

A. Install all components in accordance with NFPA 780 and UL 96 and 96A requirements, and the following:
   1. Equipment/objects to be bonded include, but are not limited to, the following:
   2. Rooftop structural steel, access ladders, raised platforms and handrails.
   3. Sheet metal and flashing, louvers, grilles, equipment screens.
   4. Exhaust fans, other HVAC equipment, rooftop ductwork, piping, plumbing vents.
   5. Primary bonds shall be made with appropriate fittings and full-size secondary conductors. Secondary conductors must pass continuously horizontally, or down from point of bond to point of connection to main conductor. Connections between dissimilar metals shall be made with approved bimetallic connectors.
   6. All conductors shall be fastened at 3’- 0” O.C., maximum, using appropriate methods.
   7. Air terminals shall be mounted in such a way that they project a minimum of 10” above the object being protected.
   8. Bond roof level main conductors to existing down conductors.

3.2 SYSTEM TEST

A. Provide a Ground Loop Conductor (GLC) continuity test, wire to wire to test resistance. Submit written results of the test. Statement shall be provided on Installer’s letterhead stationery.

END OF SECTION 26 45 50

SECTION 26 47 50 – OVERCURRENT PROTECTIVE DEVICES

PART 1 - GENERAL

1.1 RELATED DOCUMENTS

A. Section 23 00 00 - Special Requirements for Mechanical and Electrical Work shall apply.

B. Section 23 00 50 - Vibration Isolation and Seismic Restraints for HVAC, Fire Protection, Electrical and Plumbing.

1.2 SECTION INCLUDES

A. Thermal Magnetic Molded Case Circuit Breakers. Furnish as specified herein and where shown on the associated drawing.

1.3 REFERENCES

A. The circuit breaker(s) referenced herein are designed and manufactured according to the latest revision of the following specifications:

1. NEMA AB 1 - (National Electrical Manufacturers Association) Molded Case Circuit Breakers and Molded Case Switches

2. UL 489 - (Underwriters Laboratories Inc.) Molded Case Circuit Breakers and Circuit Breaker Enclosures

3. UL 943 - Standard for Ground Fault Circuit Interrupters

4. CSA C22.2 No. 5-M1986 - (Canadian Standard Association) Molded Case Circuit Breakers

5. IEC 157-1 - (International Electrotechnical Commission) Low-Voltage Switchgear and Control Gear Part 1: Circuit Breakers

6. Federal Specification W-C-375B/GEN - Circuit Breakers, Molded Case; Branch Circuit and Service

7. NFPA - (National Fire Protection Association) NEC (National Electrical Code)

1.4 SUBMITTALS

A. Manufacturers Installation Instructions for Electronic Trip Circuit Breakers Including instructions for identification and receiving inspection, circuit breaker mounting, trip unit functions and adjustments, troubleshooting, accessories, wiring diagrams and dimensional drawings.

1.5 QUALIFICATIONS

A. To be considered for approval, a manufacturer shall be specialized in manufacturing products specified in this Section with a minimum of fifty (50) years documented experience.

B. Furnish products listed by Underwriters Laboratories Incorporated (UL), or testing firm acceptable, to the authority having jurisdiction as suitable for application specified.

1.6 WARRANTY

A. Manufacturer shall warrant specified equipment to be free from defects in materials and workmanship for the period of two(2) year from date of substantial completion.

PART 2 - PRODUCTS

2.1 MANUFACTURERS

A. Approved manufacturers shall be Square D Company, Siemens, Eaton.

2.2 MOLDED CASE CIRCUIT BREAKERS

A. Common Molded Case Circuit Breaker Characteristics:

1. Circuit breakers shall be constructed in accordance with the following standards:

   UL 489, NEMA AB1 CSA 22.5, No. 5 Federal Specification W-C-375B/GEN IEC 157-1 BS 4752

2. Circuit breakers shall be constructed using glass reinforced insulating material providing superior dielectric strength. Current carrying components shall be completely isolated from the handle and the accessory mounting area.

3. Circuit breakers shall have an over center, trip free, toggle operating mechanism which will provide quick-make, quick-break contact action.

4. The circuit breaker shall have common tripping of all poles.

5. The circuit breaker handle shall reside in a "TRIPPED" position midpoint between "ON" and "OFF" to provide local trip indication.

6. Circuit breaker escutcheon shall be clearly marked "ON" and "OFF" in addition to providing International I/O markings.

7. The maximum continuous current rating and UL and IEC certification standards with applicable voltage systems and corresponding AIC ratings shall be clearly marked on face of circuit breaker.

8. Each circuit breaker shall be equipped with a push-to-trip button, located on the face of the circuit breaker to mechanically operate the circuit breaker tripping mechanism for maintenance and testing purposes.

9. Circuit breakers shall be factory sealed and shall have date code on face of circuit breaker.

10. Circuit breaker/circuit breaker combinations for series connected interrupting ratings shall be listed by UL as recognized component combinations.

Any series rated combination used shall be marked on the end use equipment along with the statement "Caution - Series Rated System".

11. Manufacturer shall provide time/current characteristic trip curves (and Ip & I^2t let through curves for true current limiting circuit breakers only) for each type of circuit breaker.

12. Circuit breakers shall be equipped with UL listed electrical accessories as noted on the associated drawing.

13. All circuit breakers shall be UL listed for reverse connection without restrictive line and load markings and be suitable for mounting in any position.

14. Circuit breaker handle accessories shall provide provisions for locking handle in the "ON" or "OFF" position.

15. Circuit breakers shall be Fixed construction with factory installed mechanical lugs.

16. All lugs shall be UL listed to accept solid and/or stranded copper conductors only. Lugs shall be suitable for or 90□C rated wire, sized according to the 75□C temperature rating in the National Electrical Code.

17. All circuit breakers shall be UL listed to accept field installable/removable mechanical type lugs. Lug body shall be bolted in place, snap in design not acceptable.

18. All circuit breakers shall be capable of accepting line and/or load bus connections.

19. All circuit breakers shall be 100% rated.

B. Thermal Magnetic:

1. Shall be Square D type FY, FA, FH, FC, FI, Q2, Q2H, Q2-H, KA, KH, KC, KI, Q4, LA, LH, LC, LI, MA, MH, NA, NC, PA, PH, PC or approved equal.

2. Circuit breakers shall have a permanent trip unit containing individual thermal and magnetic trip elements in each pole providing inverse time delay and instantaneous circuit protection.

3. All circuit breakers shall have factory preset and sealed thermal trip elements. The thermal trip system shall be RMS sensing and thermally responsive to protect circuit conductor(s). in a 400□C ambient temperature.

4. Two and three pole circuit breakers shall have an internal common trip crossbar to provide simultaneous tripping of all poles. Circuit breaker frame sizes above 100 amperes shall have a single magnetic trip adjustment located on the front of the circuit breaker which allows the user to simultaneously select the desired instantaneous trip level of all poles.

5. Standard circuit breakers up to 250 amperes at 600 VAC shall be UL listed as HACR type. ASll Circuit breakers shall be 100% rated.

PART 3 - EXECUTION

3.1 INSTALLATION

A. Install circuit breakers in accordance with manufacturers written instructions and the National Electrical Code.

3.2 FIELD QUALITY CONTROL

A. Field Inspection and Maintenance shall be performed according NEMA AB 4 - Procedures for Field Inspection and Performance Verification of Molded Case Circuit Breakers Used in Commercial and Industrial Applications.

B. Inspect each circuit breaker visually.

C. Perform several mechanical ON-OFF operations on each circuit breaker.

D. Operate push-to-trip button, located on the face of the circuit breaker, several times to mechanically operate the circuit breaker tripping mechanism.

E. Verify circuit continuity on each pole in closed position.

F. Check tightness of all connections using calibrated torque wrench per manufacturers recommended torque values.

G. Test ground fault systems by operating push to test button.

END OF SECTION 26 47 50

SECTION 26 48 00 – 600V FUSES

PART 1 - GENERAL

1.1 RELATED DOCUMENTS

A. Section 23 00 00 - Special Requirements for Mechanical and Electrical Work shall apply.

B. Section 23 00 50 - Vibration Isolation and Seismic Restraints for HVAC, Fire Protection, Electrical and Plumbing.

1.2 RELATED WORK SPECIFIED ELSEWHERE

A. Nameplates and Device Plate Markings: Section 26 05 50.

1.3 SUBMITTALS

A. Submit shop drawings and product data in accordance with the General Conditions.

PART 2 - PRODUCTS

2.1 GENERAL

A. Provide rejection fuses for all fusible equipment regardless of which section has furnished such equipment.

B. Fuses shall be of the ratings shown on the drawings, U.L. listed and shall be Bussmann Manufacturing Co. or Gould-Shawmut Company.

2.2 PRODUCTS

A. All fuses shall be current limiting and have an interrupting capacity of at least 200,000 amperes RMS symmetrical.

B. The time-current characteristics and ratings shall be such that positive selective coordination is assured.

C. Fuses, 600 amperes and smaller, where applied to general feeder and branch circuit protection, shall conform to U.L. Class RK-1 standards and be Bussmann Type LPN-R or LPS-R "Low Peak", Gould-Shawmut dual element "Amp-trap" or approved equal.

D. Individual motor circuit fuses shall be sized at approximately 125% of motor full load current. Fuses, below 600 amperes, shall conform to U.L. Class RK-5 standards and be Bussmann Type LPN-R or LPS-R "Low-Peak" or Gould-Shawmut dual element "Amp-trap". Fuses, 601 amperes and larger, shall conform to UL Class L standards and be Bussmann Type KRP-C "Hi-Cap", Gould-Shawmut Form 480 "Amp-Trap", or approved equal.

E. Fuses, where required for circuit breaker back-up protection shall conform to U.L. Class RK_1 standards and be Bussmann Type KTN or KTS "Limitron", Gould-Shawmut Class K "Amp-trap", or approved equal.

PART 3 - EXECUTION

3.1 INSTALLATION

A. Install all fuses as required where indicated on the drawings and where required by the NEC.

B. Replace all fuses cleared during construction.

C. Provide 3 spare fuses of each size and type and location as provided on the project.

END OF SECTION 26 48 00

SECTION 26 49 00

UNINTERRUPTABLE POWER SUPPLY (UPS)

PART 1 - GENERAL

1.1 SUMMARY

The specifications mentioned in this document describe the requirements for a modular, scalable, and digital Uninterruptible Power Supply (UPS) consisting of one or more single power module units connected in parallel inside a standard frame without the need for either a centralized system controller or an external centralized maintenance bypass switch. The UPS shall automatically maintain AC power within specified tolerances to the critical load, without interruption (for specified duration as per battery run time), during failure or deterioration of the mains power supply. The UPS system shall be expandable by inserting additional modules of the same rating, to provide for module redundancy or load growth requirements. The manufacturer shall design and furnish all materials and equipment to be fully compatible with electrical, environmental, and space conditions at the site. The UPS includes all equipment to properly interface the AC power source to the intended load and will be designed for unattended operation.

1.2 STANDARDS

The modular UPS system along with the associated equipment and components will be manufactured in accordance with the following applicable standards:

General safety requirements for UPS	IEC 62040-1: 2017, EN62040-1: 2019 CQC3108-2011 UL 1778 and CSA C22.2 NO.107.3, Fifth Edition
EMC requirements for UPS	IEC 62040-2: C2 standard
Method of specifying the performance and test requirements of UPS	VFI-SS-111
Environmental aspects, requirements, and reporting	EN62040-4/IEC62040-4/AS62040-4 (VFI SS 111)
Operating modes	VFI, VI, VFD (ECO) IEC 62040-3 Section 5.3.4
Surge protection	ANSI C62.41 B3 including C62.41.1, and C62.41.2 Category B
Electronic device regulations	FCC Rules and Regulations, Part 15, Subclass B, Class A. The UPS shall have a label stating FCC compliance
Wiring practices and materials	The UPS shall be compatible with the wiring practices, materials, and coding in accordance with the requirements of the National Electrical. Code, OSHA, and applicable local codes and standards
Energy star	The UPS shall comply with Energy Star 2.0 requirements for Uninterruptable Power Suppliers (UPSs)
Seismic rating requirements	IBC 2021 Sds=1.93, Ip=1.5, and z/h=0/1 Optional seismic brackets shall be available from the UPS manufacturer for use in compliance with this certification

1.3 SYSTEM DESCRIPTION'

1.3.1 Design Requirements

- For non-redundant operation the complete integrated UPS system shall be sized to provide a maximum of 200 kVA/kW quality power output at ≥104 °F (40 °C) at ambient.
- Load voltage and bypass line voltage shall be 480 VAC, 3-phase, 4-wire plus ground.
- Input voltage shall be 480 VAC, 3-phase, 4-wire plus ground.
- The AC input source and bypass input source shall each be a solidly grounded wye service.
- It will be able to supply all required power to full rated output kVA loads with power factor from 0.5 lagging to 0.5 leading without any deration.
- The VRLA or Lithium-ion battery will support the UPS a capacity of 200 kW load for at least ___ minutes at 77 °F (25 °C) at startup.

1.3.2 Modes of Operation

The UPS shall operate as an on-line reverse transfer/double conversion system in the following modes:

1. Normal

   The UPS inverter continuously supplies the critical AC load. The rectifier draws power from the commercial AC source and converts it into DC power for the inverter and the battery charger. The battery charger maintains the battery in a fully charged and optimum operational condition. The inverter converts the DC power into clean and regulated AC power which is supplied to the critical load (conditioned line).

2. ECO Mode

   The critical AC load shall be continuously powered by the bypass with the inverter available to power the load if the bypass source voltage or frequency exceeds adjustable parameters of power quality. This feature shall also be available in parallel operation.

3. Dynamic Online Mode

   If this mode is selected, all power switches (configured internally or externally) and the battery breakers are closed except for the maintenance bypass breaker, and the system prefers to put the load on the bypass, to achieve the aim of energy-saving. When the load power is fed by bypass supply, the inverter is in the mode of power quality compensation for the bypass voltage. When the voltage of the bypass supply is beyond the pre-defined and adjustable limits, the system will transfer to the inverter output. In this mode, the system can normally charge the battery. This feature shall also be available in parallel operation.

4. Intelligent Paralleling Mode

   Allows the system to automatically adapt capacity to meet immediate load requirements by measuring the system output current and the real power needed by the load downstream, in order to switch excess units to standby mode sleep mode, while ensuring continuous system availability. When units are running in an idle state, they are not completely switched off, but they still have the inverter control active and synchronized, as well as the DC bus charged in order to be ready to start up in case of load increase. The activation time of idle units is less than 5 milliseconds and during this quick transitory phase/step, the remaining active units will continue to supply the load without any interruption supporting a temporary overload condition. Intelligent Paralleling mode allows each UPS unit to operate in standby (parallel configurations) for the same amount of time, ensuring an equal lifespan of module components.

5. Battery

   Upon failure of utility AC power, the critical load shall be powered by the inverter, which, without any switching, shall obtain its power from the battery plant through the DC-DC converter. There shall be no interruption in power to the critical load upon failure or restoration of the utility AC source.

6. Recharge

   Upon restoration of the utility AC source, the rectifier shall supply power to the output inverter and to the DC-DC converter, which shall simultaneously recharge the batteries. This shall be an automatic function and shall cause no interruption to the critical load.

7. Bypass

   If the UPS must be taken out of service, the static transfer switch shall transfer the load to the bypass source. The transfer process shall cause no interruption in power to the critical load. An optional external wrap-around maintenance bypass shall be used to ensure full isolation of the unit for the service of internal components while providing safety from arc flash.

8. Off-Battery

   If the battery is taken out of service, it shall be disconnected from the DC-DC converter by means of an external disconnect circuit breaker. The UPS shall continue to function and meet all the specified steady-state performance criteria, except for the power outage backup time capability. If multiple battery strings are used, each string shall be capable of being electrically isolated for safety during maintenance.

9. Peak Shaving

   The UPS should be capable of powering the load by supplying part of the energy from the battery and part of the energy from the rectifier.

10. Automatic Restart Mode

    The battery may become exhausted following an extended AC utility failure. The inverter shuts down when the battery reaches the End of Discharge voltage (EOD). The UPS may be programmed to Auto Recovery after EOD after a delay time if the AC utility recovers. This mode and any delay time may be programmed by the commissioning engineer.

11. Paralleling Operation

    The UPS shall have the vertical and horizontal scalability option for redundancy or capacity expansion.

    1. Vertical Scalability: UPS shall be capable to accommodate additional power modules within the same rack (limited to its maximum frame capacity) online without dropping the connected load. It shall be designed based on discrete control logic platform i.e. each power and static switch module shall have its own intelligent DSP controller to avoid single point of failure.

    2. Horizontal Scalability: UPS shall have option to connect up to four UPSs in parallel configuration for redundancy or capacity expansion. Under normal operating conditions, the power delivered to the load will be equally shared between number of UPS power modules connected to the parallel bus with a tolerance of 5%. In the event of an overload, the system will transfer to the bypass source.

12. Online Maintenance

    If the UPS needs to be maintained or repaired, all UPS power modules and static switch module bypass module in the system should be replaceable online hot swappable without shutting the system down. Additionally, the UPS should also be equipped with maintenance bypass for full system maintenance.

13. Common Battery

    UPS shall be capable to support common battery configuration when multiple UPSs are connected in parallel. In this mode, each UPS can use the same battery to feed the required load.

14. Regen Mode

The UPS rack system shall have the ability to perform self-test for full rated capacity without using any external load banks. In this mode, UPS rectifier, inverter, and static bypass shall be tested up to full load capacity without any failure. Power consumption in this mode shall only be full load losses of UPS. This mode shall also be available in parallel UPS configuration.

1.3.3 Performance Requirements

The solid-state power components, magnetics, electronic devices, and overcurrent protection devices shall operate within the manufacturer's recommended temperature when the UPS is operating at 100% critical load and maintain battery charging under either of the following conditions:

- Any altitude within the specified operating range ≤9843 ft. (3000 m).
- Any ambient temperature within the specified operating range of 32 °F to 122 °F (0 °C to 50 °C).

1.3.4 Input

1. Voltage: Input voltage specifications of the UPS shall be,

- Rectifier AC Input:
  - 480 V, 4-wire (3-phase + N +PE).

  Bypass AC Input:
  - 480 V, 4-wire (3-phase + N +PE).

2. Voltage Range:

- For 480 V, Line 408 V to 528 V at 100% load, 288 V to 408 V with linear derating.

3. Frequency Range: 40 Hz to 70 Hz.
4. Maximum Inrush Current: UPS inrush current not to exceed 1.5 times rated input current.
5. Power Factor:
   - For 480 V UL Module 60 kVA Power Module:
     Input power factor will be ≥0.99 at 100% load for only 1-2 power modules, 0.99 for being >50% load for ≥3 power modules, 0.96 for being >25% load for ≥3 power modules, 0.99 for being >50% load for ≥5 power modules, and 0.98 for being >25% load for ≥5 power module.
     Input inactive power will be <15% rated power.
6. Total Current Harmonic Distortion: The total harmonic distortion of input current introduced by the rectifier will be ≤10% for 25% linear load, 3% for 100% linear load and 5% for 100% nonlinear load.
7. Power Walk-in Period: Need to support power walk-in function. All the power module start at same time, 0% to 100% of full rated load over 1 seconds to 30 seconds (default 5 seconds) per module.
8. Surge Protection: Withstands input surges of 6 kV (line to ground) without damage as per criteria listed in EN 61000-4-5:1995.
9. Short Circuit Current Rating: Units shall carry as standard 65 kA Short Circuit Withstand Rating. All ratings shall be certified, and a label shall be applied to the unit clearly identifying this rating as required by the National Electrical Code.

1.3.5 AC Output

1. AC Output Voltage:
   - 480 V, 4-wire (3-phase + N +PE).
2. Load Rating: 100% of load rating for any load from 0.5 lagging to 0.5 leading.
3. Voltage Stability:
   - ±1% RMS average for a 100% balanced 3-phase load.

- ±3% RMS average for a 100% unbalanced load.

4. Voltage Adjustment Range: ±5% for line drop compensation adjustable by factory service personnel.
5. Voltage Distortion: 1% total harmonic distortion (THDv) maximum into a 100% linear load, 3% THDv maximum into a 100% non-linear load with crest factor ratio of 3:1.
6. Bypass Frequency Synchronization Range: ±0.5, 1.0, 2.0, 3.0 Hz, adjustable by factory service personnel, ±2.0 Hz default setting.
7. Frequency Slew Rate: Single module system 0.1 Hz/sec to 3 Hz/sec, 0.6 Hz/sec default setting, parallel system 0.6 Hz/sec.
8. Frequency Stability: The inverter frequency regulation will be +/-0.1% of rated frequency.

- System Efficiency: Defined as output kW/input kW at rated lagging load power factor; and not less than the values listed below.
- In Double Conversion Mode: For 480 V, up to 97.5 ±0.2% for 60 kVA/3 U frames, 100% load >96.3%. For 208 V, up to 95.2 ±0.2% for 60 kVA/3 U frames, 100% load >94.0%.
- In Dynamic Online Mode: Up to 98.9 ±0.2%.
- In Eco Mode: Up to 99±0.1%

kVA Rating 480 V 300 kVA Frame (kVA)	**Maximum Efficiency Double Conversion (%)**
200	97.4

9. Phase Imbalance:
   - Balanced Loads: 120° ±1°.
   - 100% Unbalanced Loads: 120° ±1.5°.

10. ltage Transients (Average of All Three Phases):
    - 0 to 100% or 100% to 0%.
    - Response Meets IEC 62040-3:201
    - Figure 2 Curve 1, Class 1 Meets ITIC and CBEMA Curve Requirements Output voltage recovery to ±2% tolerance band is within 20mS per IEC62040-3.
11. Inverter Output Overload at Full Output Voltage:

Table 1.1 Inverter Overload Duration

Load	Duration Inverter will Support Rated Load
≤105%	Continuous
105% to 125%	10 minutes
125% to 150%	60 seconds
150% to 200%	Minimum 200 milliseconds

Table 1.2 Bypass Overload Duration

Load	Duration Inverter will Support Rated Load
≤110%	Continuous
110% to 125%	10 minutes
	60 seconds
>150% (impact load)	200 milliseconds
1000%	10 milliseconds

The bypass circuit is protected by the bypass input circuit breaker. The breaker curves will be provided to assist in determining the maximum load and duration. Bypass will close when bypass overcurrent timeout.

1.3.6 Grounding

The UPS chassis shall have an equipment ground terminal.

1.3.7 Battery Management

1. Battery Autonomy Time Remaining

The UPS will predict the battery autonomy time remaining based on the percentage charge on the battery prior to discharge, the end cell voltage, and the loading on the system. There will be an approximate indication on battery autonomy time remaining through LCD and SNMP communications.

2. Temperature-Compensated Charging

The UPS system has battery charge temperature compensation function. When the ambient temperature is increased, the DC bus voltage (which charges the battery) will be reduced correspondingly to provide optimal charging voltage for the battery, thus prolonging the battery service lifetime. Requires battery cabinet temperature sensor, standard in Vertiv matching cabinets.

3. Battery Load Testing

The UPS shall be capable of performing battery load testing under operator supervision. The UPS shall be capable of testing the battery without risk of disrupting power to the critical load. The UPS shall display and log the result of the test with appropriate alarms if reduced battery capacity or battery failure is detected.

1.4 ENVIRONMENTAL CONDITIONS

The UPS shall be able to withstand the following environmental conditions without damage or degradation of operating characteristics:

1. Operating Ambient Temperature

- UPS: 32 °F to 104 °F (0 °C to 40 °C) full performance, 104 °F to 122 °F (40 °C to 50 °C) with automatic derating. 104 °F to 113 °F (40 °C to 45 °C) derating 0.9, 113 °F to 122 °F (45°C to 50 °C) derating 0.8.
- Battery Temperature Compensation: -3.0 (selectable from 5.0 to -5.0 around 25°C).

2. Storage/Transport Ambient Temperature

- Storage without Battery: -40 °F to 158 °F (-40 °C to 70 °C).
- Storage with Battery: 5 °F to 86 °F (-15 °C to 30 °C).

3. Relative Humidity

1. 0 to 95%, non-condensing.

4. Altitude
5. ≤3000 m, below 1500 m without derating, derate power by 1% per 100 m between 1500 m and 3000 m.

6 Audible Noise Level at 100% Load

- ≤65 dBA measured 1 m from the surface of the unit for 150 kVA 208 V or 300 kVA 480 V.
- ≤70 dBA measured 1 m from the surface of the unit for 600 kVA

1.5 WARRANTY

1.5.1 UPS Warranty

The UPS manufacturer shall warrant the unit against defects in workmanship and materials for eighteen months after the shipping date. Product shipment date is determined only from the bill of lading, refer to

SL-71249_Vertiv Limited Warranty_3-Phase AC Power Product.

1.5.2 Warranty—End User

Warranties associated with items not manufactured by the UPS supplier but included as part of the system shall be passed through to the end user.

1.6 QUALITY ASSURANCE

1.6.1 Manufacturer's Qualifications

The manufacturer shall have a minimum of 30 years of experience in the design, manufacture and testing of solid-state UPS systems.

The quality system for the engineering and manufacturing facility shall be certified to conform to Quality System Standard ISO 9001 for the design and manufacture of power protection systems for computers and other sensitive electronics.

1.6.2 Factory Testing

Before shipment, the manufacturer shall fully and completely test the UPS unit to ensure compliance with the specification.

The UPS unit shall be tested at the system-specified capacity. Testing shall be done using load banks at part-load and the full kW rating of the unit.

Operational discharge and recharge tests shall be conducted to ensure performance.

System operations such as startup, shutdown, and transfers shall be demonstrated.

A certified copy of the test results shall be available for each system as indicated on the order.

1.7 SUBMITTALS

1.7.1 Proposal Submittals

Submittals with the proposal shall include:

- Descriptions of equipment to be furnished, including deviations from these specifications.
- Document stating compliance with FCC requirements.
- Document stating listing to UL, including edition used for listing.
- Document showing compliance with required SCCR and labeling.
- System configuration with single-line diagrams.
- Detailed layouts of customer power and control connections.

- Functional relationship of equipment, including weights, dimensions, and heat dissipation.
- Information to allow distribution system coordination.
- Size and weight of shipping units to be handled by contractor.

1.7.2 Order Submittals

Submittals supplied at time of order shall include:

- All the documentation presented with the proposal.
- Detailed installation drawings including all terminal locations.
- Interconnect wiring diagrams showing conduit wiring with terminal numbers for each wire.

1.7.3 UPS Delivery Submittals

Submittals upon UPS delivery shall include:

- A complete set of submittal drawings
- One set of instruction manuals. Manuals shall include a functional description of the equipment, safety precautions, instructions, step-by-step operating procedures, and routine maintenance guidelines, including illustrations.

PART 2 - PRODUCT

2.1 FABRICATION

2.1.1 Materials

All materials of the UPS shall be new, of current manufacture, high grade, and shall not have been in prior service except as required during factory testing. All active electronic devices shall be solid-state. All power semiconductors shall be sealed. Control logic and fuses shall be physically isolated from power train components to ensure operational safety and to protect from heat. Minimum estimated life of the major components used in the UPS (includes fan and bus capacitors) shall not be less than 7 years.

2.1.2 UPS Internal Wiring

Wiring practices, materials and coding shall be in accordance with the requirements of the National Electrical Code and applicable local codes and standards. All bolted connections of bus bars, lugs, and cables shall be in accordance with requirements of the National Electric Code and other applicable standards. All electrical power connections shall be torqued to the required value and marked with a visual indicator.

2.1.3 Field Wiring

All field wiring power connections shall be to tin-plated copper bus bars for connection integrity. Bus bars shall have adequate space to allow two-hole, long-barrel, and compression type lugs forming a permanent connection between field wiring and field- installed lugs.

Provisions shall be made in the cabinets to permit installation of input, output and external control cabling using raceway or conduit. Provision shall be made for top access to input, output, bypass, and DC connections as per the technical specifications. In conformance with the NEC, connection cabinets shall provide for adequate wire bend radius. Optional External Maintenance Bypass or Wiring Cabinet for Bottom cable access required.

2.1.4 Construction and Mounting

The UPS shall be housed in an IP20 enclosure, designed for floor mounting. The UPS shall be structurally adequate and have provisions for forklift handling. Maximum cabinet height shall be 8.7 in. (2000 mm) for all UPS range.

2.1.5 Cooling

Forced air cooling shall be provided to ensure that all components are operated well within temperature ratings. Airflow shall be controlled according to load demand. If one of the cooling fans experiences a fault, the UPS shall be immediately notified of the condition through the user interface and through remote monitoring services.

2.2 EQUIPMENT

2.2.1 UPS System

The UPS system shall consist of an IGBT power factor-corrected rectifier, DC-DC converter and 3-phase, transformer-free T-type inverter, bypass static transfer switch, bypass synchronizing circuitry, protective devices, and accessories as specified. The specified system shall also include a battery disconnect breaker and battery system.

2.2.2 Surge Protection

The UPS shall have built-in protection against surges, sags, and overcurrent from the AC source. The protection shall meet the requirements specified in standards ANSI C62.41 B3 including C62.41.1 and C62.41.2.

2.2.3 Output Protection

The UPS shall be protected against sudden changes in output load and short circuits at the output terminals. The UPS shall have built-in protection against permanent damage to itself and the connected load for all predictable types of malfunctions. Fast-acting, current-limiting devices shall be used to protect against cascading failure of solid-state devices. Internal UPS malfunctions shall cause the module to trip off-line with minimum damage to the module and provide maximum information to maintenance personnel regarding the reason for tripping off-line. The load shall be automatically transferred to the bypass line uninterrupted for an internal power modules malfunction. The status of protective devices shall be indicated on a graphic display screen on the front of the unit.

2.3 COMPONENTS

2.3.1 Rectifier

The term rectifier shall denote the solid-state equipment and controls necessary to convert alternating current to regulated direct current to supply the inverter and charge the battery. The DC output of the rectifier shall meet the input requirements of the inverter without the battery being connected.

1. Input Current Harmonic Distortion

The rectifier shall actively control and reduce input current distortion over the full operating range of the UPS without the need for an additional passive input filter. Input current THDi shall be less than 3% at rated linear loads and nominal voltage in double-conversion mode.

2. Dynamic Current Input Limit Reduction

The rectifier, in conjunction with the other UPS controls and circuitry, shall adjust the current demanded for battery charging as a function of UPS wattage load and input voltage level.

2.3.2 DC-DC Converter

The term DC-DC converter shall denote the equipment and controls to regulate the output of the rectifier to the levels appropriate for charging the battery and to boost the battery voltage to the level required to operate the inverter. The DC-DC converter shall be solid-state, capable of providing rated output power and, for increased performance, shall be a pulse width- modulated design and shall utilize insulated gate bipolar transistors (IGBTs). The DC-DC converter shall control charging of the battery. The AC ripple voltage of the charger DC shall not exceed 1.4% RMS of battery voltage.

1. Battery Recharge

The rectifier/charger shall be capable of supplying an additional 20% power for recharging a fully discharged DC stored energy source for charging current with UPS at full load and input voltage at

nominal. After the stored energy source is recharged, the rectifier/charger shall maintain the source at full charge until the next emergency operation.

2. Battery Equalize Charge

A manually initiated equalize charge feature shall be provided to apply an equalize voltage to the battery. The duration of equalize charge time shall be adjustable from 8 to 100 hours. A method shall be available to deactivate this feature for valve regulated battery systems.

3. Stop Battery Charging Function

Battery charging may be stopped by a shunt trip of the battery cabinet breaker when over temperature is sensed in the battery cabinet, on generator mode.

4. Overvoltage Protection

There shall be DC overvoltage protection so that if the DC voltage rises to the pre-set limit, the UPS shall shut down automatically and initiate an uninterrupted load transfer to bypass or shall disconnect the battery through the DC breakers in the battery string.

5. Temperature-Compensated Charging

The UPS shall adjust the battery charging voltage based on the battery temperature reported from external battery temperature sensors. When multiple sensors are used, the voltage shall be based on the average temperature measured. Excessive difference in the temperature measurements shall be reported and the charging voltage adjusted to protect the batteries from excessive current.

6. Battery Load Testing

The UPS shall be capable of performing battery load testing under operator supervision. The UPS shall be capable of testing the battery without risk of disrupting power to the critical load. The UPS shall display and log the result of the test with appropriate alarms if reduced battery capacity or battery failure is detected.

2.3.3 Inverter

The term inverter shall denote the equipment and controls to convert direct current from the rectifier or battery through the DC-DC converter to precise alternating current to power the load. The inverter shall be solid-state, capable of providing rated output power and, for increased performance, the inverter shall be a pulse-width-modulated design and shall utilize insulated gate bipolar transistors (IGBTs).

1. Overload Capability

The inverter shall be able to sustain an overload across its output terminals while supplying full rated voltage of up to 150% for 60 seconds. The inverter shall be capable of short-circuit conditions including phase-to-phase, phase-to-ground, and 3-phase faults. After the fault is removed, the UPS shall return to normal operation without damage. If the short circuit is sustained, the load shall be transferred to the bypass source and the inverter shall disconnect automatically from the critical load bus.

2. Output Frequency

The inverter shall track the bypass continuously, providing the bypass source maintains a frequency of Nominal ±10%.

3. Phase-to-Phase Balance

The inverter shall provide a phase-to-phase voltage displacement of no worse than ±1.5 degrees with a 100% unbalanced load.

4. Inverter Fault Sensing and Isolation

The UPS shall be provided with a means to detect a malfunctioning inverter and isolate it from the critical load bus to prevent disturbance of the critical load voltage beyond the specified limits.

5. Battery Protection

The inverter shall be provided with monitoring and control circuits to protect the battery system from damage due to excessive discharge. Inverter shutdown shall be initiated when the battery voltage has reached the end of discharge voltage. The battery end-of-discharge voltage shall be calculated and automatically adjusted for partial load conditions to allow extended operation without damaging the battery. Automatic shutdown based on discharge time shall not be acceptable.

2.3.4 Static Bypass Operation

When maintenance is required or when the inverter cannot maintain voltage to the load due to sustained overload or malfunction, a bypass circuit shall be provided to isolate the inverter output from the load and provide a path for power directly from an alternate AC (bypass) source. The UPS control system shall constantly monitor the availability of the inverter bypass circuit to perform a transfer. The inverter bypass circuit shall consist of a continuous duty bypass static switch and an overcurrent protection device to isolate the static bypass switch from the bypass utility source. The bypass static switch shall denote the solid-state device incorporating silicon-controlled rectifiers (SCRs) that can automatically and instantaneously connect the alternate AC source to the load.

1. Static Bypass Switch Rating

The static bypass switch shall be rated for continuous duty operation at full rated load for highest reliability without the use of mechanical devices as used with a momentary rated device.

2. Manual Load Transfers

A manual load transfer between the inverter output and the alternate AC source shall be initiated from the control panel. Manually initiated transfers shall be make-before-break, utilizing the inverter, and the bypass static switch.

3. Automatic Load Transfers

An automatic load transfer between the inverter output and the alternate AC source shall be initiated if an overload condition is sustained for a period more than the inverter output capability or due to a malfunction that would affect the output voltage. Transfers caused by overloads shall initiate an automatic retransfer of the load to the inverter only after the load has returned to a level within the rating of the inverter source and the alarm has been acknowledged.

4. Back-Feed Protection

As required by UL1778 and CSA, the static transfer switch shall not back-feed UPS power to the bypass distribution system while the UPS is operating on battery during a bypass power outage. The purpose of this requirement is to prevent the risk of electrical shock on the distribution system when the normal source of power is disconnected or has failed. If a shorted SCR is detected, the static transfer switch shall be isolated by an external contactor-based circuit breaker and an alarm message shall be annunciate at the UPS control panel. The load shall remain on conditioned and protected power after detection of a shorted SCR and isolation of the bypass static switch.

5. ECO-Mode

When selected, this mode of operation shall transfer the load to the bypass source and maintain it there if the bypass source frequency, slew rate, and voltage are within the adjusted operating parameters. While in this mode, the inverter shall remain operating to demonstrate the ability to instantaneously assume the load without interrupting the output voltage. Should the bypass source go outside the adjusted limits, the bypass static switch shall turn Off, isolating the load from the bypass while the inverter assumes the full critical load. The load shall be transferred from the bypass source to the inverter while maintaining the output voltage within the ITIC and CBEMA curves. There is provision to activate this function through touch screen display.

2.3.5 Dynamic Online Mode

This functioning mode allows significant energy savings by operating with a typical efficiency above 98.9 ±0.2% while providing power conditioning to the load.

1. Normal (VI)

The operating mode will depend on the quality of the mains supply in the short-term past and on the electrical characteristic of the load. If the line quality remains within permitted tolerance parameters and the load needs power conditioning, (THDi, THDv, PF) the power interface will provide continuous supply to the critical AC load while the inverter operates as series and parallel active filter. The IGBT inverter will be able to compensate the power factor of the load and the current harmonic distortion guaranteeing optimum power conditioning to the load while maintaining the highest level of efficiency.

2. Fast Transfer to VFI

Emergency (due to mains supply failure or variance beyond tolerance limits) if the bypass mains supply varies beyond tolerance levels (adjustable using the software) that cannot be compensated through the active filter, the load will be transferred from the direct line to the conditioned line, with Class 1 output performance. The load is powered from the mains through the rectifier and inverter, (provided the input mains remains within the tolerances stated in technical specifications). If the input mains fall below the lowest limit, the batteries will be used to power the load through the inverter.

3. Return to VI

When the mains supply returns within tolerance limits, the UPS will continue to supply the load through the conditioned line for a period depending on the direct line failure rate (the conditioned line draws power from the mains not the battery). When the direct line has stabilized, the UPS returns to normal VI operation. The battery charger automatically begins to recharge the battery so that maximum autonomy is guaranteed in the shortest possible time.

2.3.6 Display and Controls

1. UPS Control Panel

Each UPS module shall be equipped with a 9 in. (229 mm) touch screen, graphical LCD display. That will automatically provide all information relating to the status of current of the UPS as well as display metered values. The display shall be menu-driven, permitting the user to easily navigate through operator screens. The flexibility shall also be provided to change the display arrangement and information displayed as per the user requirement. HMI includes status LED for quick indication of UPS status. When LED is green indicates normal operation no error. When Yellow means general error, when red means faulty error.

2. Logic

UPS system logic and control programming shall reside in a microprocessor-based control system with non-volatile flash memory. Rectifier, inverter, and system control logic shall utilize high-speed digital signal processors (DSPs). CAN bus shall be used to communicate between the logic and the User Interface as well as the options. Switches, contacts, and relays shall be used only to signal the logic system as to the status of mechanical devices or to signal user control inputs. Customer external signals shall be isolated from the UPS logic by relays or optical isolation.

3. Metered Value

A microprocessor shall control the display and memory functions of the monitoring system. All three phases of 3-phase parameters shall be displayed simultaneously. All voltage and current parameters shall be monitored using true RMS measurements for accuracy to ±2% of AC voltage, ±5% AC current, ±0.2% AC frequency, ±5% battery voltage, and ±5% battery current. The following parameters shall be displayed:

- Input voltage, line-to-line.
- Input current per phase.
- Input frequency.
- Input power factor.
- Battery voltage.
- Battery charging/discharging current.

- Output voltage, line-to-line.
- Output frequency.
- Bypass input voltage, line-to-line.
- Bypass input frequency.
- Load current.
- Load real power (kW), total and percentage.
- Load apparent power (kVA), total and percentage.
- Load percentage of capacity.
- Battery temperature, each battery string.
- Battery state of charge.
- Real time efficiency curve
- Crest Factor

4. Power Flow Indications

A power flow diagram shall graphically depict whether the load is being supplied from the inverter, bypass or battery and shall provide, on the same screen, the status of the following components:

- AC Input Circuit Breaker (optional).
- Battery Circuit Breaker, each breaker connection of complete battery complement, complete disconnection, and partial connection (one or more, but not all breakers open).
- Maintenance Bypass Status.

5. Main Display Screen

The following UPS status messages shall be displayed:

- Rectifier (Off/Soft Start/Main Input On/Battery Input On).
- Input Supply (Normal Mode/Battery Mode/All Off).
- Battery Self-Test (True/False).
- Input Disconnect (Open/Closed).
- EPO (True/False).
- Charger (On/Off).
- Output Disconnect (Open/Closed).
- Maintenance Disconnect (Open/Closed).
- Bypass Disconnect (Open/Closed).
- Inverter (Off/Soft Start/On).Output Supply (All Off/Bypass Mode/Inverter Mode/Output Disabled

6. HMI Control Buttons

Buttons shall be provided to start and stop the inverter. A pop-up message requesting confirmation shall be displayed whenever a command is initiated that would change the status of the UPS. Other buttons shall be provided to reset faults and silence the alarm buzzer.

7. Event Log

This menu item displays the list of events that have occurred recently while the UPS was in operation. The

Event Log stores up to 4096 records, with the oldest events being overwritten first if the log's capacity is reached.

8. Battery Status Indicator
A battery status indicator displays DC alarm conditions, temperature, battery state of charge, the present battery voltage, total discharge time, status of last battery test, and battery time remaining during discharge.

The UPS provides the operator with controls to perform the following functions:

- Configure and manage manual battery test.
- Modify test duration and minimum voltage.
- Start battery test.
- Monitor test status and progression.
- Stop battery test.
- Battery test status.

9. Alarms
The following alarm messages shall be displayed:

- Mains Under voltage.
- Mains Voltage Abnormal
- Mains Freq. Abnormal.
- Charger Fault.
- Battery Reversed.
- No Battery.
- Parallel Comm. Fail.
- Bypass Unable to Track.
- Bypass Abnormal.
- Inverter Asynchronous.
- Fan Fault.
- Control Power Fail
- Unit Overload.
- System Overload.
- Bypass Phase Reversed.
- Transfer Time-Out.
- Load Sharing Fault.
- Bypass Over Current.
- DC Cap Life Pre-warning.
- DC Cap Life Warning.
- Fan Life Pre-warning.

- Fan Life Warning.
- Intelligent Parallel Mode Active.
- Input Neutral Lost.
- Loss of Redundancy.
- Multi Module System Inverter.

10, Controls
System-level control functions are:

- Start Inverter (and transfer to inverter).
- Stop Inverter (after transferring to bypass).
- Startup Screen.
- Battery Test Set Point Adjustment.
- Configure Manual Battery Test.
- Initiate Manual Battery Test.
- System Settings (Time, Date, Language, LCD Brightness, Password, and Audio Level).
- Alarm Silence Command.
- Fault Reset Command.
- Energy Saving Modes.
- Warning and Critical Thresholds of Load

11. Manual Procedures

Load Transfers: HMI buttons (START INVERTER and STOP INVERTER) provides the means for the user to transfer the load to bypass and back on UPS.

12. Self-Diagnostics

- Event Log File: The control system shall maintain a log of the event conditions that have occurred during system operation. Each log contains the event name, event time/date stamp, and a set/clear indicator.
- Fault Waveform Capturing: Records 3 cycles data of voltage/current of rectifier/inverter/bypass when fault triggers, in 3 cycles of recorded data, 2 cycle of data shall be captured before trigger point, 1 cycle of data shall be captured after fault trigger point.

2.3.7 Remote Monitoring and Integration Capabilities

Vertiv™ LIFE™ Services 24×7 Remote Monitoring Services: The UPS manufacturer shall provide as an optional service, which provides 24x7 continuous monitoring of events and parametric data, event and data analysis reports, and dispatch of factory trained field service personnel. The UPS can initiate periodic and critical event-driven communication with a remote service center to transfer event and parametric data for analysis and action. The remote service centers are staffed with factory-trained service personnel who can receive, analyzing, and interpreting the communicated events and data. In case of any anomalies, the remote service center personnel will dispatch factory-trained field service personnel with necessary tools and accessories to the location of the UPS to fix the problem.

1. Communication Cards: The UPS can be equipped with following communication cards including:

- Optional Communication Card: This card provides Web access, environmental sensor data, and third-party customer protocols for the UPS and manage a wide range of operating parameters, sending data over ethernet networks through secure HTTPS protocol and alarms and notifications through SNMP traps or Modbus protocol. It is also capable to integrate with any existing building management system.

- Optional Software: Provided to support the monitoring of multiple number of UPS systems at single console platform.
- Relay Card: Dry contact outputs are provided for Summary Alarm, Bypass Active, Low Battery, and AC Input Failure.

2. Customer Input Contacts: The UPS shall have four discrete input contacts available for the input and display of customer-provided alarm points or to initiate a pre-assigned UPS operation. Each input can be signaled by an isolated, external, normally open contact. When an assembly is selected as a pre-assigned UPS operation, the following actions should be initiated:

- On Generator: Provides selectable choices to enable or disable battery charging and enable or disable ECO Mode operation while on generator.
- Transfer to Bypass: Manual command to transfer from inverter operation to static bypass operation.
- Fast Power Off: Emergency Module Off (EPO) command to stop UPS operation.
- Acknowledge Fault: Acknowledge a UPS alarm condition and present faults will be reset.
- Bypass/Inverter Off: Emergency Power Off (EPO) command to stop UPS operation.
- External Maintenance Bypass Breaker (MBB) status (open or closed).

2.3.8 Battery Disconnect Breaker

The battery cabinet shall have a properly rated circuit breaker to isolate it from the UPS. This breaker will be in a separate enclosure or in a matching UPS/battery cabinet. When this breaker is open, there shall be no battery voltage in the UPS enclosure. The UPS will be automatically disconnected from the battery by a shunt trip of the battery cabinet breaker when signalled by other control functions.

2.3.9 UPS Integrated Maintenance Bypass Breakers (Optional)

The UPS system shall incorporate a four-breaker maintenance bypass breaker system (RIB, MIB, BIB, and MBB) providing power isolation to top power section (power input top entry) of UPS for ratings up to 150 kVA 208 V or 300 kVA 480 V. Includes mechanical interlock with safety switch for safe operation transfer to bypass mode.

2.3.10 Maintenance Bypass Cabinet (Optional)

The UPS system shall incorporate a matching cabinet to house a wraparound maintenance bypass with the following features:

- or 4 breakers for complete electrical isolation of the UPS with system voltage.
- Optional Kirk Key Interlock interface with solenoid key release unit (SKRU).

2.3.11 Valve-Regulated, Lead Acid Battery VRLA (Optional)

- The UPS system shall be provided with a valve-regulated, lead acid battery plant.
- The battery shall be fully charged per the manufacturer’s instructions during startup and shall demonstrate the specified operating time.

Matching VRLA Battery Cabinet

- The battery cabinet shall consist of sealed, valve-regulated batteries, a circuit breaker for isolating the battery from the UPS and a control interface to the UPS module.
- The circuit breaker shall be sized to allow discharge at the maximum published rating of the battery. The interface to the UPS module shall provide status and thermal data to allow the UPS to regulate the charging voltage and inhibit the conditions associated with battery thermal runaway. If the temperature

measurement in a battery cabinet indicates that thermal runaway is occurring, then the UPS controls shall isolate the cabinet from the charger by tripping the battery breaker in that cabinet while leaving the other battery cabinets connected to allow UPS operation during a loss of power to the rectifier.

- The battery cabinet shall be rated NEMA 1, matching the UPS style and design.
- Battery Cabinets Connected Directly to the UPS: The manufacturer shall provide all power and control parts necessary to connect the UPS to the battery cabinets.
- Battery Cabinets Separated from the UPS: The manufacturer shall provide all power and control parts necessary to interconnect the battery cabinets. The installer shall provide all cabling necessary to interconnect the UPS and the battery cabinets.
- Both overhead and under-floor site installed cabling shall be accommodated. Cable installation shall not require removal of batteries or any other battery cabinet assemblies.
- The battery system shall be sized to support a ___ kW load for ___ minutes. The battery system shall provide 100% initial capacity upon delivery.
- The battery shall be lead-calcium, sealed, valve-regulated type with a minimum three-year full warranty and a seven years pro rata warranty under full float operation. The battery design shall utilize absorbent glass mat (AGM) technology to immobilize the electrolyte.

2.3.12 Reliability and Serviceability

Mean time between failure (MTBF)

- The calculated mean time between failure for the UPS is expected to meet or exceed 170k hours when operated at an ambient temperature of 77 °F (25 °C) and a 100% resistive load.
- Mean time to repair (MTTR)
- The UPS will be designed for an approximately 0.5 hours replacement MTTR by the service engineer at the customer site.

Service Access

- Front only, all standard configuration serviceable parts shall be from the front of the UPS with door open 90 degrees.
- Expected Operational Life Critical Components
- UPS Life 15 to 20 years of life.
- AC caps: 20 years of life for 100% load (77 °F (25 °C), humidity: 50%).
- DC caps: 15 years of life for 100% load (77 °F (25 °C), humidity: 50%).
- Fans 5 to 7 years of life.
- Battery System History and Life Information, UPS shall maintain for each battery string the install dates, number of discharges, and duration of discharges to determine the life of the battery string and overall battery system.
- Power Module and Battery String Management, The UPS shall maintain the history of each power module and battery string for the life of the UPS. Only the installed modules and existing battery strings are used in the UPS life calculation.
- Power Module History and Life Information, UPS shall maintain the power module install date, number of run hours, and duration of elevated ambient temperatures which reduce the life of the UPS.

2.3.13 Optional Accessories and Features

1. Load Bus Sync

   The Load Bus Sync (LBS) enables two independent single-module UPS units to stay in sync when operating on battery or unsynchronized input sources. The LBS determines the master and slave relationship between UPS units. The LBS will be installed within each single-module UPS.

2. Seismic Anchorage Kits

   Seismic anchorage kits will be provided with the UPS unit, and if included the optional matching battery cabinet, for use in seismic restraint as required for IBC 2021 or OSHPD certification.

3. Communication Card

   A communication card shall provide Web-based UPS monitoring and management capabilities and one or two of the following remote monitoring protocols. SNMP (v1, v2, v3), Modbus or BACnet for remote monitoring.

4. Relay Contact Card

   A relay contact card shall provide output dry contact signals communicating the following UPS states: Summary Alarm, Bypass Active (On Bypass), Low Battery, AC Input Failure (UPS Fault), and on UPS.

PART 3 - EXECUTION

3.1 FIELD QUALITY CONTROL

The following inspections and test procedures shall be performed by factory-trained field service personnel during the UPS startup.

1. Visual Inspection
   - Inspect equipment for signs of damage.
   - Verify installation per drawings supplied with installation manuals or submittal package.
   - Inspect cabinets for foreign objects.
   - Verify that neutral and ground conductors are properly sized and configured per OEM requirements as noted in OEM drawings supplied with installation manuals or submittal package.
   - Inspect each battery jar for proper polarity.
   - Verify that all printed circuit boards are configured properly.
2. Mechanical Inspection
   - Check all control wiring connections for tightness.
   - Check all power wiring connections for tightness.
   - Check all terminal screws, nuts, and/or spade lugs for tightness.
3. Electrical Inspection
   - Check all fuses for continuity.
   - Confirm input and bypass voltage and phase rotation are correct.
   - Verify control transformer connections are correct for voltages being used.
   - Verify connection and voltage of the battery strings.
4. Unit Startup
   - Energize control power.
   - Perform control/logic checks and adjust to meet the manufacturer’s specification.

- Verify DC float and equalize voltage levels.
- Verify DC voltage clamp and overvoltage shutdown levels.
- Verify battery discharge, low battery warning, and low battery shutdown levels.
- Verify fuse monitor alarms and system shutdown.
- Verify inverter voltages and regulation circuits.
- Verify inverter/bypass sync circuits and set overlap time.
- Perform manual transfers and returns.
- Simulate utility outage at no load.
- Verify proper recharge.

3.2 MANUFACTURER'S FIELD SERVICE

1. Service Personnel

   The UPS manufacturer shall directly employ a nationwide service organization, consisting of factory-trained field service personnel dedicated to the startup and maintenance of UPS and power equipment.

   The manufacturer shall provide a national dispatch center to coordinate field service personnel schedules. One toll-free number shall reach a qualified support person 24 hours/day, 7 days/week, and 365 days/year. If emergency service is required, on-site response time shall be 4 hours or less within
   150 miles of a Vertiv Services center.

   Two local customer engineers shall be assigned to the site with a regional office as a backup. Escalation procedures shall be in place to notify Power Technical Support if a site is not functioning within 24 hours.

2. Replacement Parts Stocking

   Parts shall be available through an extensive network to ensure round-the-clock parts availability throughout the continental United States.

   Spare parts shall be stocked by local field service personnel with backup available from regional parts centers and the manufacturing location. A customer support parts coordinator shall be on call 24 hours a day, 7 days a week, 365 days a year for immediate parts availability.

3. Maintenance Contracts

   A complete offering of preventive and full-service maintenance contracts for both the UPS system and battery system shall be available.

UNINTERRUPTIBLE POWER SYSTEM TECHNICAL DATA

	Make			
	Model			
A	General Characteristics			Suppliers Data
1	Continuous duty three phase double conversion uninterruptible power system (UPS), The UPS shall utilize a standard 3U size rack mountable power module and scalable array architecture.			
2	Hot swappable power module should have its own controller and contains a full rated rectifier, full rated inverter, and battery charging circuit.			
3	UPS comprises a user replaceable centralized continuous duty hot swappable bypass static switch module.			
4	Standard configuration of UPS footprint shall not exceed 600×1030×2000 mm for 150 kVA/208 V or 300 kVA 480 V frame and 1200×1030×2000 mm for 600 kVA frame.			
5	All the conformal coated PCBs shall be used in the modules.			
6	External battery circuit breaker with necessary shunt tripping shall be provided for external battery banks.			
B	System Characteristics			
	Item	Unit	Specifications	
	Dimensions, W×D×H	mm	300 kVA 480 V frame: Full Breaker Assembly - 600×1030×2000 mm For Power Module - 440×630×130 mm	
	Weight	kg	For 150 kVA 208 V or 300 kVA 480 V frame: Full Breaker Assembly (not include power module) – 332 kg Weight of power module is 33.5 kg	
	Noise within 1 m	dBA	300 kVA 480 V: ≤65 For 600 kVA: ≤70	
	Operating temperature	°C	32 °F to 104 °F (0 °C to 40 °C) full performance, 104 °F to 122 °F (40 °C to 50 °C) with automatic derating	
	Relative humidity	%RH	0 to 95%, non-condensing	
	Efficiency at Double conversion mode	%	For 480 V, up to 97.5%	
	Efficiency at Eco mode	%	For 480 V, up to 99.4%	
	Efficiency at dynamic online mode	%	For 480 V, up to 99.1%	

	Protection degree, IEC (60529)	N/A	IP20	
C	Input Characteristics			
	Rated AC input voltage	VAC	480 V 4-wire (3-phase + N +PE) TN/TT/IT/HRG power distribution system	
	Input voltage tolerance	VAC	For 480 V, Line 408 V to 528 V at 100% load, 288 V to 408 V with linear derating	
	Frequency	Hz	50/60 (tolerance: 40 to 70)	
	Power factor	kW/kVA	0.99 (50 to 100% Load)	
	Maximum Input current	A rated (maximum)	For 300K 480 V: 444	
	Harmonic current distortion	THDi%	≤3 with linear load at full load operation	
	Power walk-in duration	s	All the power modules start at same time, 0% to 100% of full rated load over 1 to 30 seconds (default 5 seconds) per module	
D	Intermediate DC Circuit			
	Battery bus voltage	Vdc	For 480 V, 360 to 600, default 480	
	Total Battery Capacity (as per above backup time)	AH	For 480 V: 30 to 50 jars, 40 to 50 jars without derating	
	Maximum battery charging current	A	300 kVA 480 V: 600	
	Charging Mode		Constant current and constant voltage	
	Float voltage	V/cell (VRLA)	2.27 V/cell (selectable from 2.2 V/cell to 2.3 V/cell)	
	Temperature compensation	mV/°C/cl	-3.0 (selectable from 5.0 to -5.0 around 77 °F (25°C))	
	Ripple voltage	% V float	≤1.414	
	Ripple current	% C10	≤5	
E	UPS Output characteristics			
	Rated AC voltage	Vac	480 V 4-wire (3-phase + N +PE)	
	Frequency	Hz	60	

	Overload	%	<105% Continuous	
			105% to 110% for 60 min	
			110% to 125% for 10 min	
			125% to 150% for 1 min	
			>150% for 200 ms	
	Non-linear load capability	%	100%	
	Steady state voltage stability	%	±1 (balanced load), ±3 (100% unbalanced load)	
	Transient voltage response	%	±5	
	Total harmonic voltage	%	<1 % (100% linear load), <3% (100% non-linear load)	
	Synchronization window	Hz	Upper limit: 0.5 Hz, 1 Hz, 2 Hz, 3 Hz, +10%, Default: +10%. Lower limit: -0.5 Hz, -1 Hz, -2 Hz, -3 Hz, -10%, Default: -10%	
	Slew rate (max change rate of synchronization frequency)	Hz/s	0.6, setting range: 0.1 to 3	
	Transfer time	milliseconds	Frequency converter mode: transfer without interruption 0ms, transfer with interruption ≤ 5 milliseconds ECO mode: 4 milliseconds, Dynamic online mode: 0 milliseconds	
F	Bypass Input Characteristics			
	Rated AC voltage	VAC	480 V 4-wire (3-phase + N +PE)	
	Overload	%	≤110% for continuous	
			110% to 125% for 10 min	
			125% to 150% for 1 min	
			>150% for 200 milliseconds 1000% for 10 milliseconds	
	Frequency	Hz	60	
	Bypass voltage tolerance	%VAC	Upper limit: +10% VAC, +15% VAC, or +20% VAC Default: +15% VAC	
			Lower limit: -10% VAC, -15% VAC, -30% VAC, or -40% VAC Default: -15% VAC	

	Bypass frequency tolerance	%	±10	
G	Conformity and Standards			
	General and safety requirements for UPS used in operator access areas		IEC 62040-1 UL1778 and CSA C22.2 NO.107.3	
	Electromagnetic compatibility (EMC) requirements for UPS		IEC 62040-2 (Class C2)	
	Method of specifying the performance and test requirements of UPS		IEC 62040-3 (VFI SS 111)	
	Environmental aspects, requirements, and reporting		EN62040-4/IEC62040-4/AS62040-4 (VFI SS 111)	

END OF SECTION 26 49 00

SECTION 26 50 00 – LIGHTING FIXTURES

PART 1 - GENERAL

1.1 RELATED DOCUMENTS

A. Drawings and general provisions of the Contract, including General and Supplementary Conditions and Division 01 Specification Sections, apply to this Section.

1.2 SUMMARY A: Section Includes:

1. Interior solid-state luminaires that use LED technology.
2. Emergency lighting units.
3. Exit signs.
4. Luminaire supports.

B. Related Sections:

1. Section 26 14 00- "Wiring Devices" for occupancy sensors and manual wall box dimmers.
2. Section 26 17 00-“Low Voltage Electrical Power Conductors and Cables” for wire and cabling.

1.3 SYSTEM DESCRIPTION

A. Catalog numbers indicated in the Luminaire Schedule are a design series reference and do not necessarily represent the exact catalog number, size, voltage, wattage, type of light bar, driver, finish trim, ceiling type, mounting hardware or special requirements as specified or as required by the particular installations. Provide complete luminaire to correspond with the features, accessories, number of LED’s, wattage and/or size specified in the text description of each luminaire type. Additional features, accessories and options specified shall be included.

B. Provide all frames, supplementary support structures, hangers, spacers, stems, aligner canopies, auxiliary junction boxes and other hardware as required for a complete and proper installation. Recessed luminaires shall have frames that are compatible with the ceiling systems.

C. Luminaire voltage shall match the voltage of the circuit serving same.

1.4 DEFINITIONS

A. CCT: Correlated color temperature.
B. CRI: Color-rendering index.
C. IP: International Protection or Ingress Protection Rating. NORTHWESTERN
D. LED: Light-emitting diode.
E. LER: Luminaire efficacy rating.
F. Lumen: Measured output of lamp and luminaire, or both.
G. Luminaire: Complete lighting fixture, including lamp, reflector, and housing.

1.5 SUBMITTALS

A. Product Data: For each type of luminaire, arranged in order of luminaire designation. Include data on features, accessories, finishes, and the following:

1. Material and physical description of luminaire including dimensions.
2. Emergency lighting units including battery and charger.
3. Energy-efficiency data.

4. Life, output (lumens, CCT, and CRI), Kelvin temperature, and energy-efficiency data for LED light bars.
5. Photometric data and adjustment factors based on laboratory tests, complying with IESNA Lighting Measurements Testing & Calculation Guides, of each luminaire type. The adjustment factors shall be for light bars, drivers, and accessories identical to those indicated for the luminaire as applied in this Project.
   a. Testing Agency Certified Data: For indicated luminaires, photometric data shall be certified by a qualified independent testing agency. Photometric data for remaining luminaires shall be certified by manufacturer. LM-79 and LM-80 data for solid state lighting.
   b. Manufacturer Certified Data: Photometric data shall be certified by a manufacturer's laboratory with a current accreditation under the National Voluntary Laboratory Accreditation Program for Energy Efficient Lighting Products.
6. Photometric data, certified by a qualified independent testing agency, in IESNA format, based on certified results of laboratory tests of each luminaire type, outfitted with light bars, drivers and accessories identical to those indicated for the luminaire as applied in the Project.
7. Low voltage transformers.
8. LED power supplies.
9. Types of LED's, including manufacturer, wattage, and Color Rendering Index (CRI) and color temperature in degrees Kelvin (K).

B. Shop Drawings shall:
   1. Show detail of nonstandard or custom luminaires.
   2. Indicate dimensions, weights, method of field assembly, components, features and accessories.
   3. For custom luminaires, modified luminaires or linear luminaires mounted in continuous rows, submit scaled drawings prepared by the manufacturer showing all details of construction, lengths in runs, pendant or power feed locations, accessories, finishes and lists of materials.
   4. This Contractor shall provide the manufacturer with accurate field dimensions where required.
   5. Include wiring diagrams, power and control wiring.

C. Wiring diagrams shall detail wiring for luminaires and differentiate between manufacturer installed and field installed wiring.
D. Product Certificates shall be signed by manufacturers of luminaires certifying that products comply with requirements.
E. Dimming Driver Compatibility Certificates shall be signed by the manufacturer of driver certifying that drivers are compatible with dimming systems and equipment with which they are used. Product Certificates signed by product manufacturer shall be provided for each type of driver for dimmer controlled luminaires.
F. Maintenance Data shall be provided for luminaires and equipment to include in emergency, operation and maintenance manuals specified in specifications section describing Operations and Maintenance Data.
G. Field quality control test reports. H. Special Warranties specified in the Section. I. Review of luminaire submittals which indicate voltage, mounting condition, or quantities shall not be considered to be approval of said voltage, mounting condition or quantities. This Contractor shall field verify voltage and actual mounting condition and method. J. Product samples complete with housing, trim, specified lumen package, and 8' cord with plug for 120 V shall be submitted if requested.

1.6 CLOSEOUT SUBMITTALS

A. Operation and Maintenance Data: For lighting equipment and luminaires to include in emergency, operation, and maintenance manuals. 1. Provide a list of all arrays and drivers types used on Project; use ANSI and manufacturers' codes.

1.7 EXTRA MATERIALS

A. Furnish extra materials that match products installed and that are packaged with protective covering for storage and identified with labels describing contents.
   1. Glass, Plastic Diffusers and Lenses: 10% or one dozen (whichever is less) of each type and rating installed. Furnish at least one of each type.
   2. Globes and Guards: 5% of each type and rating installed. Furnish at least one of each type.

1.8 DELIVERY, STORAGE AND HANDLING

A. Deliver luminaires individually wrapped in factory fabricated fiberboard type containers.
B. Handle luminaires carefully to prevent breakage, denting and scouring of the luminaire finish.
C. Store product in a clean, dry space, protected from weather.

1.9 QUALITY ASSURANCE

A. Luminaire Photometric Data Testing Laboratory Qualifications: Provided by an independent agency, with the experience and capability to conduct the testing indicated, that is an NRTL as defined by OSHA in 29 CFR 1910.7.
B. Electrical Components, Devices, and Accessories: Listed and labeled as defined in NFPA 70, Article 100, by a testing agency acceptable to the Authorities Having Jurisdiction, and marked for intended use.
C. FM Global Compliance: Luminaires for hazardous locations shall be listed and labeled for indicated class and division of hazard by FM Global.
D. Comply with most current edition of the Northwestern University Design Standards.
E. Comply with NFPA 70.
F. Designated manufacturers are listed to define the requirements for quality and function of the specified product.

1.10 COORDINATION

A. Coordinate layout and installation of luminaires with ceiling system and other construction that penetrates ceilings or is supported by them including mechanical system, fire suppression, and technology and partition assemblies.
B. Provide all frames, supplementary support structures, hangers, spacers, stems, aligner canopies, auxiliary junction boxes and other hardware as required for a complete and proper installation.
C. Recessed luminaires shall have frames that are compatible with the ceiling system indicated on the Architectural Drawings.
D. Coordination Meetings: This Contractor shall meet at least twice with the ceiling installer. Hold first meeting before submittal of shop drawings to coordinate each luminaire

mounting condition with ceiling type. During second meeting, coordinate luminaire layout in each area. This Contractor shall meet at least twice with the mechanical systems installer prior to fabrication and installation of ductwork. Coordinate depth and location of all luminaires with ductwork, fire suppression, and technology in all areas.

1.11 WARRANTY

A. Comply with Division 1 requirements.
B. General Warranty: Special warranty specified in this Section shall not deprive the University of other Rights the University may have under other provisions of the Contract Documents and shall be in addition to, and run concurrent with, other warranties made by this Contractor under requirements of the Contract Documents.
C. Special Warranty for LEDs' and Drivers: Manufacturers standard form in which manufacturer of LED's and drivers agrees to replace components that fails in materials or workmanship within specified warranty period.
   1. LED arrays: 10 years from date of Beneficial Occupancy.
   2. Drivers: 10 years from date of Beneficial Occupancy.

PART 2 - PRODUCTS

2.1 MANUFACTURERS

A. Subject to compliance with requirements, provide products as listed in the Lighting Fixture Schedule or comparable products approved by the Architect.

2.2 GENERAL REQUIREMENTS FOR LUMINAIRES AND COMPONENTS

A. Recessed Luminaires: Comply with NEMA LE 4 for ceiling compatibility for recessed luminaires.
B. Luminaires: Comply with UL 1598.
C. Metal Parts: Free of burrs, sharp corners and edges. Metal work shall be free of tool marks and dents and shall have accurate angles bent as sharply as compatible with the gauges of the required metal. Intersections and joints shall be formed true and of adequate strength and structural rigidity to prevent any distortion after assembly. All miters shall be in accurate alignment with abutting intersection members.
D. Sheet Metal Components: Steel unless otherwise indicated. Form and support to prevent warping and sagging. Luminaires to be painted after fabrication. Finish ferrous mounting hardware and accessories to prevent corrosion and discoloration to adjacent materials.
E. Luminaire hardware to comply with the following material standards: For steel and aluminum luminaires, all screws, bolts, nuts and other fastening and latching hardware shall be cadmium or equivalent plated. For stainless steel luminaires, all hardware shall be stainless steel.
F. Doors, Frames, and Other Internal Access: Smooth operating, free of light leakage under operating conditions, and designed to permit relamping without use of tools. Designed to prevent doors, frames, lenses, diffusers, and other components from falling accidentally during re-lamping and when secured in operating position. Safety devices shall be detachable if necessary and shall not interfere with luminaire performance, maintenance or the seating of any luminaire element. Safety device shall not be visible during normal luminaire operation and from normal viewing angles.
G. Luminaires provided shall have means for disconnection from power source during service, as required in NEC Article 410.
H. Reflecting Surfaces: Minimum reflectance as follows, unless indicated otherwise: 1. White Surfaces: 85% 2. Specular Surfaces: 90% 3. Diffusing Specular Surfaces: 75% I.

Reflector cones shall adhere to the following:

1. Cones shall provide a minimum of 50degree cutoff to source and source image.
2. Plastic material shall not be used for reflector cones.
3. Cones shall not be permanently fastened to the housing and shall be removable without tools. Retention devices shall not deform the cone or be visible from normal viewing angles.
4. Trim shall be flush to ceiling without gaps or light leaks. Where the flange trim is separate from the cone, it shall have the same finish as the reflector cone.
5. Reflector cones shall be uniform gauge, not less than 0.032” thick, high purity aluminum Alcoa 3002 alloy. Cones shall be free from spin marks or other defects.
6. Manufacture cones using the Alzak® process. Refer to Luminaire Schedule for cone color and finish, i.e., specular or diffuse requirements.

J. Lenses, Covers, Diffusers and Globes:

1. Acrylic Lighting Diffusers: 100% virgin acrylic plastic. UV stabilized high resistance to yellowing and other changes due to aging, exposure to heat, and UV radiation.
2. Lens Thickness: At least 0.125 inch minimum unless otherwise indicated. b. Lenses shall have uniform brightness throughout the entire visible area without LED pixelation. 2. Glass Globes: Annealed crystal glass unless otherwise indicated. K. Adjustable luminaires shall have positive locking devices to fix aiming angle. Luminaires shall be capable of being relamped without adjusting aiming angle.

K. Each luminaire that has an array with a beam pattern or a spread lens that defines beam orientation shall contain locking devices to ensure the orientation is not disturbed during array replacement or cleaning.

M. All luminaires and drivers shall operate within the temperature limits of their design and as specified by UL in the applications and mounting conditions specified.

N. Luminaires recessed in suspended ceilings where the space above the ceiling is either an air supply or return plenum shall conform to NEC Article 300-22.

O. Provide plaster frame for recessed luminaires mounted in other than T-bar ceilings. Verify mounting with architectural reflected ceiling plan before ordering luminaires.

P. Fixtures installed in “hard” ceilings shall have all connections accessible through the luminaire.

Q. Provide wire guards on all open strip type luminaires in unfinished spaces.

R. For weatherproof or vapor-tight installations, finishes of luminaires and accessories shall be a premium 5 stage TGIC polyester powder coat paint minimum 2.5 mils thick, applied to factory assembled and -tested luminaires before shipping, so that the entire assembly is completely corrosion resistant for the service intended. Exterior finishes shall have an outdoor life expectancy of not less than 20 years without any visible rust or corrosion. Where aluminum parts come in contact with bronze or steel parts, apply a coating material to both surfaces to prevent corrosion.

S. Luminaires for use outdoors or in areas designated as damp locations shall be suitable gasketed to prevent the entrance of moisture. Provide approved wire mesh screens for ventilation openings. Dissimilar metals shall be separated by non-conductive material to prevent galvanic action.

T. Factory-Applied Labels: Comply with UL 1598. Labels shall be located where they will be readily visible to service personnel, but not seen from normal viewing angles when light bars are in place.

U. Luminaires shall be free of light leaks while providing sufficient ventilation of LED’s and drivers to provide the required photometric performance.

V. Luminaires shall hold LED arrays securely against normal vibration and maintenance handling.

2.3 LUMINAIRES

A. Housing shall be minimum code gauge steel construction painted after fabrication with high reflectance white paint unless otherwise indicated.
B. Shielding shall adhere to the following criteria:
1. Flat frosted diffuser shall be 100% virgin acrylic, pattern #12, and shall have matte finish on exterior side. Diffuser shall be of sufficient density to completely obscure LED image.
2. Flat clear lenses shall be injection molded 100% virgin acrylic.
3. Clear patterned lenses shall be injection molded 100% virgin acrylic, pattern #12.
4. Clear patterned lenses shall be polycarbonate, pattern #12.
5. Minimum thickness shall not be less than 0.125” with a minimum weight of 8 ounces per square foot.
C. Doorframes shall be supplied with concealed hinges and latches. Provide mitered corners with no gaps or light leaks.

2.4 EMERGENCY BATTERY PACK FOR LUMINAIRES

A. Manufacturers:
1. Basis of Design Product: (Eaton) Sure-Lites.
B. Internal Type: Self-contained, modular, battery-inverter unit, factory mounted within/top of luminaire body and compatible with driver. Comply with UL 924.
1. Indicator light: Visible without opening luminaire or entering ceiling space. Indicator Light: LED indicates normal power on.
2. Battery: Sealed, maintenance-free, nickel-cadmium type, sized for ninety (90) minutes of operation.
3. Charger: Fully automatic, solid-state.
4. Integral Self-Test: Factory-installed electronic device automatically initiates code required test of unit emergency operation at required intervals. Test failure is annunciated by an integral audible alarm and a flashing red LED.
5. Universal Voltage input.

2.5 LED LUMINAIRES AND DRIVERS

A. All Luminaires
1. Comply with IES LM-79-08 Approved Method for measuring lumen maintenance of LED light sources.
2. Comply with IES LM-80-08 Approved Method for electrical and photometric measurement of SSL product.
3. Comply with In-Situ testing for more reliable results.
4. LED’s shall be Restriction of Hazardous Substances Directive (RoHS) compliant.
5. LED arrays shall be sealed, high-performance, long-life type; minimum 70% rated output at 50,000 hours. (L70)
6. LED luminaires shall deliver a minimum of 80 lumens per watt. NORTHWESTERN
a. LED’s shall be “Bin No. 1” quality.
7. Drivers shall be solid state and accept 120 through 277 VAC at 60 Hz input.
8. The LED light source shall be fully dimmable with use of compatible dimmers switch designated for low voltage loads.
9 Luminaires shall have internal thermal protection.
10. Luminaires shall not draw power in the off state. Luminaires with integral occupancy, motion, photo-controls, or individually addressable luminaires with

external control and intelligence are exempt from this requirement. The power draw for such luminaires shall not exceed 0.5 watts when in the off state.

11. Color spatial uniformity shall be within .004 of CIE 1976 diagram.
12. Color maintenance over rated life shall be within .007 of CIE 1976.
13. Indoor luminaires shall have a minimum CRI of 85. 15. Luminaire manufacturers shall adhere to device manufacturer guidelines, certification programs, and test procedures for thermal management
14. LED package(s)/module(s)/array(s) used in qualified luminaires shall deliver a minimum 70% of initial lumens, when installed in-situ, for a minimum of 50,000 hours.
15. Luminaires shall be fully accessible from below ceiling plane for changing drivers, power supplies and arrays.

B. Power Supplies and Drivers

1. Power Factor: 0.90 or higher
2. Maximum driver case temperature not to exceed driver manufacturer recommended insitu operation.
3. Output operating frequency: 60Hz.
4. Interference: EMI and RFI compliant with FCC 47 CFR Part 15.
5. Total Harmonic Distortion Rating: 20% Maximum.
6. Meet electrical and thermal conditions as described in LM-80 Section 5.0.
7. Fully dimmable, 0 – 10 VDC standard.
8. Secondary Current: Confirm secondary current specified by individual luminaire manufacturers.
9. Compatibility of dimming switches: Certified by manufacturer for use with individually specified luminaire and individually specified control components.

2.6 LED ARRAYS

A. All LED’s of the same type are to be provided by the same manufacturer.
B. Equip each luminaire with the proper LED array of the type shown or specified in the Luminaire Schedule

2.8 WIRING

A. No internal wiring shall be visible at normal viewing angles.

2.9 LUMINAIRE SUPPORT COMPONENTS

A. Single-Stem Hangers shall be 1/2-inch steel tubing with swivel ball fitting and ceiling canopy. Finish shall be the same as the luminaire.
B. Twin-Stem Hangers shall be two, 1/2-inch steel tubes with single canopy arranged to mount a single fixture. Finish shall be the same as the luminaire.
C. Rod Hangers shall be 3/16-inch minimum diameter, cadmium-plated threaded steel rod.
D. Wires shall be ASTM A 641/A 641M, Class 3, soft temper, zinc coated steel, 12 gauge.
E. Wires for humid spaces shall be ASTM A 580/A 580M, composition 302 or 304, annealed stainless steel, 12 gauge.
F. Aircraft Cable Support shall use cable, anchorages, and intermediate supports recommended by luminaire manufacturer.
G. Hangers for pendant industrial luminaires shall be heavy duty No. 8 jack chain with hangers, "S” hooks, mounting straps, and all required accessories for complete installation.

2.10 EXIT SIGNS

A. General Requirements for Exit Signs: Comply with UL 924; for sign colors, visibility, luminance, and lettering size, comply with Authorities Having Jurisdiction.
   1. AC only or battery backup as scheduled.
   2. Universal mount canopy.
   3. RED Letters on white, mirror or brushed nickel field as scheduled.
   4. Directional chevrons as indicated, field configurable.
   5. LED panel, 0.25 W.
   6. Self-Powered Exit Signs (Battery Type): Integral automatic charger in a self-contained power pack with nickel metal hydride battery with self diagnostics.]

B. Internally Lighted Signs:
   1. Products: Provide products as listed in the Lighting Fixture Schedule.
   2. Steel Housing, 20 gauge (Chicago campus), white finish.
   3. Glass or plastic faceplate.
   4. Red Letters on white field.
   5. Directional chevrons as indicated.
   6. Field selectable full size arrow designations (Chicago campus).
   7. Light bars: LED, 70,000 hours minimum rated lamp life. a. Individual LED modules shall not be visible.
   8. Maximum power consumption: 5 watts.
   9. AC powered signs shall be 120/277V input.
   10. Self-Powered Exit Signs (Battery Type): Integral automatic charger in a self-contained power pack.
      a. LED, 70,000 hours minimum rated lamp life.
      b. Battery: Two hour capacity sealed, maintenance-free, Ni Cad type, five year manufacturer warranty.
      c. Charger: Fully automatic, solid-state type with sealed transfer relay.
      d. Operation: Relay automatically energizes lamp from battery when circuit voltage drops to 80 percent of nominal voltage or below. When normal voltage is restored, relay disconnects light bars from battery, and battery is automatically recharged and floated on charger.
      e. Test Push Button: Push-to-test type, in unit housing, simulates loss of normal power and demonstrates unit operability.
      f. LED Indicator Light: Indicates normal power on. Normal glow indicates trickle charge; bright glow indicates charging at end of discharge cycle.
      g. Integral Self-Test: Factory-installed electronic device automatically initiates code-required test of unit emergency operation at required intervals. Test failure is annunciated by an integral audible alarm and a flashing red LED.

2.11 EMERGENCY LIGHTING UNITS

A. General Requirements for Emergency Lighting Units: Self-contained units complying with UL 924.
   1. Housing: 20 ga. Steel.
   2. Flexible cord and plug connections shall not be permitted.
   3. Battery: Sealed, maintenance-free, lead-acid type.
   4. Charger: Fully automatic, solid-state type with sealed transfer relay.
   5. Lamping: Tungsten Halogen LED.
   6. Operation: Relay automatically turns lamp on when power-supply circuit voltage drops to 80 percent of nominal voltage or below. Lamp automatically disconnects

from battery when voltage approaches deep-discharge level. When normal voltage is restored, relay disconnects lamps from battery, and battery is automatically recharged and floated on charger.

7. Test Push Button: Push-to-test type, in unit housing, simulates loss of normal power and demonstrates unit operability.
8. LED Indicator Light: Indicates normal power on. Normal glow indicates trickle charge; bright glow indicates charging at end of discharge cycle.

PART 3 - EXECUTION

3.1 INSTALLATION

A. Luminaires:
   1. Set level, plumb, and square with ceilings and walls, and secure according to manufacturer's written instructions and approved submittal materials, unless otherwise indicated.

B. Temporary Lighting: If it is necessary, and approved by Architect, to use permanent luminaires for temporary lighting, install and energize the minimum number of luminaires necessary. When construction is sufficiently complete, remove the temporary luminaires, disassemble, clean thoroughly, and reinstall.

C. Remote Mounting of Drivers: Distance between the driver and fixture shall not exceed that recommended by manufacturer. Verify, with manufacturers, maximum distance between driver and luminaire.

D. Mounting height indicated from finished floor to bottom of pendant luminaire or to the center of the outlet box for wall mounted luminaires unless otherwise noted. Verify mounting heights with Architect and Lighting Designer.

E. Mounting height may also be indicated as the length of the pendant below finished ceiling.

F. Lay-in Ceiling Luminaire Supports: Use grid as a support element.
   1. Luminaires of Sizes Less Than Ceiling Grid: Install as indicated on reflected ceiling plans or center in acoustical panel, and support luminaires independently with at least two 3/4- inch metal channels spanning and secured to ceiling tees. In addition, provide slack earthquake safety wire hangers secured diagonally from opposite luminaire corners to structural members above suspended ceiling.

G. Suspended Luminaire Support:
   1. Pendants and Rods: Where longer than 48 inches, brace to limit swinging.
   2. Stem-Mounted, Single-Unit Luminaires: Suspend with twin-stem hangers.
   3. Continuous Rows: Use tubing or stem for wiring at one point and tubing or rod for suspension for each unit length of luminaire chassis, including one at each end.
   4. Do not use grid as support for pendant luminaires. Connect support wires or rods to building structure.
   5. All power feeds shall originate from the same location/end of each run.
   6. Where pendants or rods are longer than 48", brace to limit luminaire swinging.

H. Provide all necessary hanging or mounting devices and accessories for all luminaires. Verify the types needed for various ceiling conditions. Plaster rings shall be provided where required.

I. Verify weight and mounting method of all luminaires prior to ordering and provide suitable support. Coordinate with General Contractor for luminaires that require additional blocking or support. Luminaire mounting assemblies shall comply with all local seismic codes and regulations.

J. Metal decking shall not be pierced for luminaire support.

K. Refer to architectural reflected ceiling plans for coordination of luminaire locations with

mechanical, fire protection, technology and fire safety equipment. Where conflicts occur, coordinate with Architect, Engineer and Lighting Designer prior to installing any of the Systems.

L. In accessible suspended ceilings, luminaire wiring connections, including equipment grounding conductor, is to be through use of 72-inch (maximum) flexible conduit from a rigidly supported junction box.

M. Wire per requirements of branch circuit installation. Properly ground each luminaire.

N. Luminaires located in recessed ceilings with a fire resistive rating of 1 hour or more shall be enclosed in an approved fire resistive rated box equal to that of the ceiling. Acoustical ceiling tiles are not acceptable.

O. Install luminaires with vent holes free of air blocking obstacles.

P. This Contractor shall be responsible for adjusting aperture flanges or rings on all recessed luminaires to be flush with the finished ceiling. Trim shall completely conceal ceiling opening.

Q. Brace suspended luminaires installed near ducts or other elements so that they do not swing into obstructions.

R. Wall mounted luminaires shall be supported from four-square outlet box plaster ring and from wall at non-feed end with two 1/4-inch toggle bolts for gypsum board walls or 1/4-inch bolts to pre-set inserts for concrete wall.

S. Luminaires shall not be secured to ductwork or other Systems.

T. Adjust variable position lamp-holders for proper lamp position prior to luminaire installation.

U. Connect wiring according to Section 26 0519 "Low-Voltage Electrical Power Conductors and Cables."

3.2 DOWNLIGHT LUMINAIRES

A. Recessed Type in Accessible Ceilings: Mount in frames suitable for the ceiling with the recessed portion of the luminaire securely supported from the ceiling opening by use of a metal trim ring.

B. Recessed Type in Non-accessible Ceilings: As Specified for mounting in accessible ceilings, except provide access to wiring and driver through the ceiling opening for the luminaire.

3.3 LUMINAIRES

A. Recessed Type: Support luminaires independent of the ceiling suspension system. Provide four integral tabs (one at each corner) which rotate into position and lock on ceiling tees after luminaire is lifted into the ceiling cavity or provide four clips similar to Caddy #535. Provide mounting frames suitable for the ceiling type. In addition, provide slack earthquake safety wire hangers secured diagonally from opposite luminaire corners to structural members above suspended ceiling.

B. Wall Mounted Type: Support from four-square outlet box plaster ring and from wall at non-feed end with two ¼ inch toggle bolts for gypsum board walls or ¼ inch bolts to pre-set inserts for concrete wall.

C. If clearance above T-bar system is too restricted to "tip-in" luminaire, coordinate with acoustic ceiling installer by leaving one cross T-bar off until the cross T-bar shall be secured into its proper place. Luminaires installed in hidden-spline-type ceilings shall have supporting channels installed by Ceiling Contractor to adequately support the luminaire without providing additional hangers from the structural ceiling above the suspended ceiling.

D. Surface Mounted Type:
   1. Where mounted on accessible ceilings, support from structural members above ceiling by means of hanger rods through ceiling or as approved.
   2. Continuous Runs of Luminaires: Laser sight to ensure luminaires are straight and true when sighting from end to end, regardless of irregularities in the ceiling. Where luminaires are so installed, omit ornamental ends between sections. All seams/ joints shall be tightly fitted.
E. Pendant Mounted Type:
   1. Provide strong back channel entire luminaire length unless luminaire is designed specifically to be self-supporting.
   2. Where suspended below accessible ceiling, provide structural support at suspended ceiling level from structural members above ceiling. Do not run hanger rods through ceiling.
   3. Continuous Runs of Luminaires: Laser sight to ensure luminaires are straight and true when sighting from end to end, regardless of irregularities in the ceiling. Where luminaires are so installed, omit ornamental ends between sections. All seams/joints shall be tightly fitted.
   4. All power feeds shall originate from the same location/end of each run.
F. Install luminaire diffusers only after construction work, painting and clean up are completed.

3.4 LED LUMINAIRES

A. Adhere to manufacturers installation guidelines regarding proper thermal management.

3.5 LIGHTING CONTROL

A. Provide branch circuiting in coordination with the requirements of Wiring Device Section and as indicated.
B. Provide all necessary interconnecting wiring and control modules, and local override switches for afterhours operation. Verify correct operation in presence of NU Electric Shop.

3.6 CLEANING AND ADJUSTING

A. Remove protective plastic covers from luminaires and luminaire diffusers only after construction work, painting and clean-up are completed. Remove, clean, and reinstall all dirty reflectors and diffusers.
B. Clean luminaires internally and externally after installation. Use methods and materials recommended by manufacturer for cleaning Alzak reflectors and other surfaces.
C. Make final adjustment of aimable luminaires and adjustable light settings under the direction of the Architect and/or Lighting Designer during a scheduled period of time prior to the completion of the Project, after normal business hours if required. Include all equipment and personnel expenses including overtime required for focusing.
D. Luminaires, reflectors, louvers and accessories which are damaged, blemished, or impregnated with fingerprints shall be replaced at this Contractor's expense. All finishes shall be unmarred upon Project completion.

3.7 IDENTIFICATION

A. Install labels with panel and circuit numbers on concealed junction and outlet boxes. Comply with requirements for identification as specified.

3.8 FIELD QUALITY CONTROL

A. Test for Emergency Lighting: Interrupt power supply to demonstrate proper operation. Verify transfer from normal power to battery/generator and retransfer to normal. Walk test and verify foot-candle levels meet Code with meter.
B. Prepare a written report of tests, inspections, observations, and verifications indicating and interpreting results. If adjustments are made to lighting system, retest to demonstrate compliance with standards.
C. Inspect each installed luminaire for damage. Replace damaged luminaires and components.
D. Replace all inoperable LED arrays at the end of construction prior to University beneficial occupancy.
E. Advance Notice: Give dates and times for field tests.
F. Provide instruments to make and record test results.
G. Malfunctioning Luminaires and Components: Replace or repair, then retest. Repeat procedure until units operate properly.

3.9 ADJUSTING

A. Occupancy Adjustments: Within 12 months of date of Substantial Completion, provide on-site assistance in adjusting aimable luminaires to suit actual occupied conditions. Provide up to two visits to Project during other-than-normal occupancy hours for this purpose. Some of this Work may be required after dark. 1. Adjust aimable luminaires in the presence of Architect and University representative.

END OF SECTION 26 50 00

SECTION 26 52 50 LIGHTING SYSTEMS COMMISSIONING

PART 1 – GENERAL

1.1 INTENT:

The intended result of the Lighting Commissioning process is to assure Owner that the lighting systems are installed and operate in accordance with contract drawings and specifications prior to The Owner's acceptance of the building and that of Owner's personnel are properly trained to operate and maintain the systems.

1.2 SCOPE:

A. Work Included: This project will have selected lighting systems commissioned. The equipment and systems to be commissioned are specified in Part 3 of this specification section. That portion of the commissioning effort, which the Installing Contractor is responsible to execute, is defined herein. The commissioning process will be directed by a Commissioning Agent. The lighting commissioning shall provide substantial verification that systems and equipment are installed and performing in accordance with the contract documents and design intent. This independent commissioning shall be complementary to the construction period services performed by the Architect and Electrical Consulting Engineer.

B. Work Not Included: It shall not be incumbent upon the Commissioning Agent to evaluate design. Systems installed and performing in accordance with plans and specifications that do not achieve lighting levels or performance in accordance with design intent will be so noted when observed. Commissioning of electrical power systems are excluded from the lighting commissioning process except as may be incidental to the operations of the lighting system; i.e. note would be made if power to circuits was incomplete, etc.

1.3 RELATED DOCUMENTS

A. All of the Project "General Documents" apply to work specified in this Section; consult them in detail for applicable instructions.
B. Manufacturers referenced in the technical specifications are for the purpose of establishing a standard of quality. Alternate manufacturers providing the same quality materials or equipment will be given consideration by the Architect and/or Engineer if they are notified in writing and approved by the Owner.
C. Section 23 00 00 - Special Requirements for Mechanical and Electrical Work shall apply.
D. Section 23 00 50 - Vibration Isolation and Seismic Restraints for HVAC, Fire Protection, Electrical and Plumbing shall apply.

1.4 RELATED WORK:

A. Installing Contractor: The contractor responsible for the installation of the equipment and/or systems to be commissioned (Installing Contractor) shall be responsible for all pre-commissioning work as defined within this specification section, in addition to all associated work in the individual commissioned equipment and/or systems related Division 16 specification sections.

B. Electrical Contractor: All Division 16 Electrical specification sections form a part of this section and shall have the same force and effect as if printed herewith in full.

1.5 SUPPLEMENTAL CONDITIONS:

A. All related Division 16 work must be complete prior to functional testing, unless approved in writing by the owner's Project Manager. This includes completion and acceptance of the following tasks for all systems, including but not limited to:

1. Submission of all data requested by the Commissioning Agent
2. Completed and signed start-up and pre-functional checklist documentation
3. Required training of owner personnel completed and approved
4. Submission of the approved O&M manuals

B. Remedial Work: Completion of remedial work required as a result of failed functional testing shall be the responsibility of the Installing Contractor. The time period for completion of remedial work required as a result of failed functional testing shall be fourteen (14) calendar days prior to the date of acceptance of Substantial Completion.

C. The responsible Installing Contractor shall reimburse the Owner for all costs associated with effort include direct personnel expenses, plus overhead and profit, due to delays in Substantial Completion of the project. These costs shall include travel costs for Owner’s commissioning team members.

1.6 COMMISSIONING AGENT AUTHORITY:

Throughout the commissioning process, the commissioning agent's role is primarily one of an observer/witness; monitoring the installation, startup, and operation of the lighting systems. The commissioning agent shall have no authority to alter design or installation procedures. If acceptable performance cannot be achieved, it will be the commissioning agent's responsibility to apprise, design engineer, and/or the contractor of the deficiency. Corrective actions shall be the responsibility of design engineer, and/or contractor; and not that of the commissioning agent. The commissioning agent shall have the authority to require tests and demonstrations to verify proper performance.

1.7 ARCHITECT/ENGINEER RESPONSIBILITY:

A. In addition to their normal performance of Construction Period Services, the Architect/Engineer will furnish to the Commissioning Agent one copy of all approved lighting systems Shop Drawings and Submittals and place the Commissioning Agent on the mailing list for all communications regarding the lighting systems.

B. The Architect/Engineer shall respond in writing to issues cited in correspondence provided by the Commissioning Agent.

1.8 CONTRACTOR'S RESPONSIBILITY:

A. The General Contractor shall be responsible for assuring that the commissioning agent is provided with all relevant correspondence, submittals, notifications, and assistance as may be required to satisfactorily complete the commissioning process using whatever personnel, time and resources that are required. This Section provides minimum commissioning requirements; however, the Contractor shall exceed those requirements whenever necessary to achieve the intent of Lighting Commissioning.

B. The General Contractor shall include in his Bid the cost of furnishing the material requested and manpower necessary for the verification of proper lighting system installation and operation as specified in this Section.

C. The Contractor shall respond in writing to issues cited in correspondence provided by the Commissioning Agent.

1.9 CONTRACTORS’ SUBMITTALS AND DOCUMENTATION:

A. Commissioning Team: The General Contractor shall provide the Commissioning Agent with a list of team members (including: member’s name, contract affiliation, title, responsibility, phone, fax, email, and mailing address) who will represent the Installing

Contractors in pre-functional checks and functional performance testing. Submit no later than at the Pre-Commissioning Meeting.

B. Schedule and Notification:

1. The Construction Schedule shall incorporate and provide for commissioning milestones and activities. General Contractor shall coordinate with the Electrical Subcontractor to provide adequate time to accommodate the witnessing of milestone events, equipment start-ups, and all other activities requiring scheduled participation of the Commissioning Agent as defined in the pre-functional checks and functional performance verification forms.

2. Notification of an impending event shall be provided to the Commissioning Agent at least 48 hours in advance, notification may be via fax or email. The 48-hour notice is acceptable if the event is accurately scheduled on the most current Construction Schedule. Events not accurately identified in the Construction Schedule shall require one week notice.

C. Submittals:

1. Operating and Maintenance Manuals shall be provided to the Architect/Engineer for review no later than thirty (30) days after the last submittal/shop drawing has been approved. A/E shall provide the Operating and Maintenance Manuals to the Commissioning Agent after the A/E's review. The Manuals with A/E and Commissioning Agent's review comments will be returned to the Contractor for preparation for use in training /operating and maintenance personnel. Return of the reviewed Manuals shall be approximately six weeks after Contractor submission.

2. Demonstration and Training schedule shall be submitted to the Commissioning Agent at the time of submission of the Operation and Maintenance Manuals. Schedule shall fully detail all demonstrations and training that are to be provided by the Contractor to the Owner operating and maintenance personnel. Actual dates and times, if used, shall be understood as tentative and subject to change based upon actual construction progress. However, at a minimum, the Demonstration and Training schedule shall include time allocations (i.e. hours) for each piece of equipment or system for which demonstration and training are specified. Commissioning agent review comments will be provided to when Operating and Maintenance Manuals are returned to the Contractor.

D. Documentation:

1. The electrical sub-contractor shall maintain on site the pre-functional checklists, organized by system and by subsystem. Entries shall be made on the checklists no less than weekly and/or as items are completed.

2. Two weeks prior to scheduled start of functional performance verification, the General Contractor shall provide the Commissioning Agent with a comprehensive report asserting that systems are ready for functional performance verification. The report shall include the following materials:

a. Detailed descriptions of any deviations from the contract documents (including but not limited to: change orders, addenda, and variations) organized by system and by subsystem.

b. Complete set of as-built drawings and documents, clearly identifying all deviations from the contract documents and organized by system and by subsystem.

c. Complete set of all required manufacturer's equipment tests, organized by system and by subsystem.

d. Completed pre-functional checklists, organized by system and by subsystem.

e. Results of any failed tests and detailed description of corrective actions taken, organized by system and by subsystem.

E. Additional Information

1. The Installing Contractor may receive a written request from the Commissioning Agent requesting specific information needed about each piece of commissioned equipment or system.

2. Typically this request for specific information will include: detailed manufacturer installation and start-up, operating, troubleshooting and maintenance procedures; full details of any contracted tests; and full warranty information, including all responsibilities to keep the warranty in force clearly identified. In addition, copies of the installation and checkout materials shipped with the equipment and the actual field checkout sheet forms used by the factory or field technicians shall be submitted to the Commissioning Agent.

3. The Commissioning Agent may request further documentation deemed necessary for the commissioning process. These data requests may be made prior to the normal submittal process.

F. Contractor's responsibility for deviations in submittals from requirements of the Contract Documents is not relieved by the Commissioning Agent's review.

1.10 SEQUENCING AND SCHEDULING:
The lighting systems commissioning may be construed to be in three parts: installation verification, training and demonstrations, and performance verification.

A. Installation verification utilizes Pre-Functional Check Lists, documenting that equipment/systems is/are installed and started in accordance with contract documents and is/are serviceable.

B. Contractor's training of and demonstrations for operating and maintenance personnel occurs after Pre-Functional Checks are complete and all test and inspection reports and operation and maintenance manuals have been submitted and approved. Training and demonstrations usually precede Performance Verification; some training may occur during performance verification.

C. Performance verification employs Functional Performance Verification forms and occurs only after all work required in related Sections has been successfully completed.

PART 2 - PRODUCTS

NOT APPLICABLE TO THIS SPECIFICATION

PART 3 - EXECUTION

3.1 COMMISSIONING TEAM AND CHECKLISTS

A. The General contractor shall designate team members to participate in the pre-commissioning checks and functional performance testing specified herein. In addition, the project manager, the architect/engineer and the manufacturer will represent the Owner. The team members shall be designated as follows:

Designation	Function
CA	Commissioning Agent
GC	General Contractor
EC	Electrical Contractor
OR	Owner's Representative
A/E	Architect/Engineer
MFR	Manufacturer

B. The commissioning checklists shall be submitted after lighting submittals have been reviewed.

1. Forms are to be initialed and dated at the time of completion of the specific checklist task item.

2. Where additional forms are required, the responsible Installing Contractor shall be responsible for photocopying or replicating the appropriate form(s).

3.2 RESPONSIBILITIES: Each member of the commissioning team has responsibilities to the successful completion of the commissioning process as follows:

A. The Owner's Representatives shall perform their normal construction contract administration functions.

B. The Architect shall provide adequate support to the Consulting Electrical Engineer as related to his duties in the commissioning process. It shall also be the Architect's responsibility, either directly or through his assignee, to assure that the commissioning agent is:

1. Provided copies of approved shop drawings as they are returned to the Contractor

2. Notified of time, date, and place of all regularly scheduled progress meetings, and of any special meetings that may be called regarding lighting systems.

3. Copied on all correspondence pertinent to the lighting systems including but not limited to minutes of progress meetings, responses to contractor requests for information, change order documentation.

C. The Consulting Electrical Engineer shall perform his normal construction contract administration functions.

D. The General Contractor shall, in addition to his normal responsibilities for construction of the project, assure that his subcontractors recognize the authority of the commissioning agent and perform responsive to the requirements of the commissioning process. He shall assure that proper notification, at least 48 hours in advance, is provided to the commissioning agent of the milestones of the lighting systems installation, at a minimum as follows:

1. Factory start-up of specialty equipment
2. Date of punch-out inspections
3. Date of instructions to Loudoun County's operating personnel regarding operations of the lighting system

E. The Electrical Subcontractor shall perform his normal contract obligations and be responsive to the authority of the commissioning agent.

F. The Electrical Subcontractor shall, in addition to his normal responsibilities for construction of the project, assure that proper notification of the milestones of the lighting systems installation as cited in Paragraph D. are provided to the General Contractor. The Electrical

Subcontractor shall assure that his subcontractors recognize the authority of the commissioning agent and perform responsive to the requirements of the commissioning process.

G. The Commissioning Agent will follow the procedures as set forth in the paragraph titled Commissioning Agent Procedures to execute his responsibility for:

1. Verifying that the required lighting systems are installed and operating in accordance with contract documents and specifications.

2. Assuring that Operating and Maintenance personnel are fully trained on systems operation and maintenance.

3. Assuring that Close Out documentation is properly provided to the Owner.

3.3 TESTS: The pre-commissioning checks and functional performance shall be performed after ceilings are installed and walls are painted. To achieve lighting systems commissioning, the Commissioning Agent shall:

A. Attend periodic construction progress meetings and perform unscheduled walks though the building to observe and keep abreast of lighting systems installation progress, means and methods. commissioning agent's presence at meetings and in the building will be for his benefit in preparing to commission the building and shall in no way be construed as superseding the authority of the project architect/engineers.

B. Perform a complementary review of lighting Shop Drawings after approval of the Project Consulting Electrical Engineer. The purpose of this review is primarily one of familiarization with equipment to be furnished on the project for on-site verification by the commissioning agent and in no way relieves the Consulting Electrical Engineer of his duties for shop drawing review.

C. Issue Commissioning Check Lists relevant to the project for Contractor monitoring and verification of installation progress. Establish milestones in the lighting system installation at which time interim commissioning status reports will be prepared and issued by the Commissioning Agent.

D. Be present to observe manufacturers' start-up of lighting and lighting control systems.

E. Field verify actual lighting levels (at night with no daylight) to ensure foot candle level is in accordance with contract document requirements, and lighting controls operations.

F. Be present during Contractor instructions to the Owner operating personnel regarding operation and maintenance of the lighting system.

G. Review Contractor prepared Operating and Maintenance Manuals, As-Built drawings, and all certifications and warranties required for submission by project specifications.

H. Furnish a written report and recommend acceptance of the lighting system upon satisfactorily completing the commissioning process. Recommendations for approval, when appropriate, will be forwarded to the project Architect/Engineer for inclusion in their final submission of project close out documentation to the Owner.

3.5 CONTRACTOR COMMISSIONING PROCEDURES:

The General Contractor and all relevant Sub-Contractors shall, in addition to being responsive to the procedures cited for execution by the Commissioning Agent in paragraph titled Commissioning Agent Procedures, perform as follows to achieve satisfactory lighting systems commissioning. The Contractor shall:

A. Demonstrate the performance of each lighting system to the Commissioning Agent and the Owner's Representative after completion of construction. Schedule the energy management sub-Trade Representatives as may apply to demonstrate the performance of the equipment and systems.

B. Evaluations

1. The Owner's Commissioning Agent shall make the observations, calibrations, and measurements associated with the functional tests of lighting and control systems identified herein; set the time schedule of functional testing; and make any necessary corrective or remedial work recommendations to ensure that the commissioned equipment and systems function as described in the control sequence of operation.

2. The Installing Contractor shall operate all equipment and systems in support of the commissioning work effort and shall provide all labor, equipment, and materials necessary to allow operational testing of all commissioned equipment and systems.

C. Weather-Dependent Test Procedures: Weather-dependent test procedures (daylight controls) that cannot be performed by simulation shall be performed in the appropriate climatic conditions. When simulation is used, the actual results shall be verified under appropriate climatic conditions.

D. At a minimum, the performance and operation demonstrations of the following equipment and/or systems will be required: motion and occupancy sensors control of lighting systems.

E. In addition to the foregoing, the Contractor shall repeat any other measurement contained in the lighting level report where required by the Commissioning Agent for verification or diagnostic purposes. Should any verification test reveal operation or performance not in accordance contract documents, the Contractor shall rectify the deficiency, and re-additional cost to the Owner. The total sum of such costs shall be deducted from the final payment to the Contractor.

3.6 ISSUES RESOLUTION:

A. During the commissioning process, the Commissioning Agent may identify issues that require corrective action. The Commissioning Agent has no authority to dictate ways and means of issues resolution other than enforcing the dictates of Contract Drawings and Specifications. Resolution of issues that require interpretations or modifications to the contract documents shall be the responsibility of the Architect and Engineers. Project completion date shall not be delayed due to lack of timely issues resolution unless authorized contract extensions have been executed.

B. Written responses shall be made to issues reported by the Commissioning Agent. The Commissioning Agent shall issue such correspondence as deemed appropriate during the commissioning process with original provided and copies to the General Contractor, Architect, and Consulting Lighting Engineer. The General Contractor, Architect, and/or Consulting Lighting Engineer shall provide the Owner with a written response to each eficiency item cited by the Commissioning Agent as to corrective actions implemented. The written response shall be provided to the Owner within two (2) weeks of the date of the Commissioning Agent's deficiency correspondence; copies shall be provided to the Commissioning Agent, General Contractor, Architect, and Consulting Electrical Engineer. Issues that have not been fully resolved within the two-week period shall be noted as such with explanation of intended resolution; and subsequent status reports of the continued deficiency resolution shall be made in writing at two-week intervals until such time as the deficiency has been fully rectified. The Owner reserves the right to withhold partial payment for construction contract or professional services until satisfactory resolution of lighting issues have been documented and verified.

3.7 SATISFACTORY COMPLETION:

The Contractor's personnel shall be made available to execute all aspects of the commissioning process until the Owner accepts final results. Commissioning tasks and meetings may be repeated until the Owner is satisfied and will not be fixed as one-time, one-chance events for the Contractor.

3.8 PHASING OF CONSTRUCTION AND COMMISSIONING:

Where project completion is performed in stages, the commissioning plan will take into account the staged start-up of each phase as shown on the Drawings and/or specified.

3.9 CLOSE OUT SUBMITTALS: Close out documents, consisting of but not limited to As-Built Drawings, Certificates of Inspections, Warranties, Operating and Maintenance Manuals as submitted to the Architect/Engineer shall be copied to the commissioning agent for concurrent review.

3.10 DEMONSTRATIONS AND TRAINING: Commissioning agent shall be notified in advance of the dates and times of demonstrations for and training of operating and maintenance personnel, and the commissioning agent shall be present at all sessions.

3.11 COMMISSIONING REPORTS

A. The Commissioning Agent shall document commissioning milestones with reports. The documents shall acknowledge acceptance at the milestone or separately list deficiencies observed or discovered. The document shall be distributed to Commissioning Team members.

B. The Commissioning Agent shall prepare a final formal report to the Owner that will include a narrative in the form of an Executive Summary of the results of commissioning process, impressions of the demonstration and training sessions, and a certification that the verification of each item is complete and all systems are operating as intended.

END OF SECTION 26 52 50

SECTION 26 72 00 – FIRE ALARM SYSTEM WORK NOTES

PART 1 - GENERAL

1.1 RELATED DOCUMENTS

A. All of the Project "General Documents" apply to the work specified in this Section; consult them in detail for applicable instructions.

B. All work shall be coordinated with O&R Fire Alarm Proprietary Vendor, Arco Protection Systems, Inc. 845 463 6910.

1.2 DESCRIPTION OF WORK

A. WORK INCLUDED: Provide all labor, materials, equipment, plant, tools, and management services for proper and complete execution of all Work. Without restricting the generality of the foregoing, the following items of work are included:

(1) Fire Alarm and Smoke Detection System.

a. New networked and addressable fire alarm and smoke detection system Including all areas as shown on the drawings and indicated in the specification.
b. Replace existing building fire alarm panel with new networked panel to communicate directly with new building new panel.
c. New conduit and wire for complete installation of systems.
d. Connection of all fan shut down where required by Code.
e. All cutting and patching and fire stopping of walls, floors, ceilings and other assemblies requiring penetration.
f. Complete programming and software installation required.
g. Include (1) complete re-programming and modifications to on-site software program per engineer direction.
h. Include cost to install 25 additional devices as directed by Engineer due to field conditions or local sub-code requirement. Include unit costs in bid to include device, wiring and conduit.
i. 5% or 3 spare parts whichever is greater, of each type of devices and equipment installed.
j. Complete demolition and removal of existing systems, including but not limited to devices, panels, wiring, conduit, etc.
k. Complete new conduit infrastructure system as required.
l. Complete warranty of system for period of (1) year from time of entire system final acceptance.
m. Manufacturer preventive maintenance contract for 3 consecutive years from time of entire system final acceptance, including parts, labor, etc.
n. All fire alarm connection to elevators to perform Phase One fire fighter recall.

(2) General

a. Hangers, anchors, cutting, patching, pass through, fire cutoff, smoke sealed and watertight sleeves, bases, chases, supports for: fixtures and all other electrical equipment.
b. Strict compliance with facility standards and procedures.
c. Written operating and maintenance instructions and final testing of all equipment.
d. Complete detailed and accurate CAD generated “As-built” drawings.
e. Removal of all debris related to this work.

f. Coordination with the facility as to determine quantity, time and duration of all required shutdowns. This requirement shall be included within the contractors bid.
g. Written guarantee of all work performed for a period of one year from final date of acceptance.

1.3 CODES AND QUALITY ASSURANCE

A. The Contractor is responsible for performing all work in a neat, workmanlike manner. All operating procedures shall be strictly adhered to. Each Bidder shall visit the site and become informed as to the conditions of the premises and the extent and character of the work required. No consideration will be granted for any alleged misunderstanding of the Work to be done.

B. Use adequate numbers of skilled workmen who are thoroughly trained and experienced in the necessary crafts and who are completely familiar with the specified requirements and the methods needed for proper performance of the work of this Section. Standards herein apply to similar work performed under other Sections.

C. All electrical work, equipment and apparatus shall conform to the most recent requirements of the following:

New York State Construction Code
NFPA 72, 70, 90A, 91, and 101 - National Fire Protection Association
NEC - National Electrical Code of NFPA
NEMA - National Electric Manufacturers Association
Electrical Utility
Local Codes and Utilities Requirements
NBFU - National Board of Fire Underwriters
CABO/ANSI
IPCEA - Insulated Power Cables Engineers Association
ASTM - American Society for Testing and Materials
UL - Underwriters' Laboratories
Requirements of the Owner's Insurance Underwriter

Without additional cost to the Owner, provide such other labor and materials as are required to complete the Work of this Section in accordance with the regulations of the current editions of these codes, and the requirements of governmental agencies having jurisdiction, regardless of whether such materials and labor are called for elsewhere in these Specifications. These rules, regulations and codes shall govern as a minimum standard. In the event of conflict with the Contract Drawings or Specifications requiring workmanship or material of a higher quality than required by the above-mentioned rules, regulations, codes and authorities, the most stringent shall apply.

D. During this work, the Contractor shall be responsible for maintaining safety among persons in his employ in accordance with the standards set by the OCCUPATIONAL SAFETY AND HEALTH ACT of 1970. The Engineer and Architect shall be held harmless for any accident, injury, or any other incident resulting from non-compliance with these or any other standards.

E. Drawings are schematic with regard to exact locations and dimensions. Review all Drawings provided. The Contractor shall coordinate his work to avoid conflicts. It is the Contractor's responsibility to confirm that all equipment will fit. Any discrepancies or inconsistencies are to be reported immediately to the Engineer for clarification.

F. Mandatory examination of the site shall be made by the Contractor, who shall compare it with the Drawings and Specifications and who shall satisfy himself as to the conditions under which the work is to be performed. No allowance shall subsequently be made for any extra expense incurred due to failure or neglect to make such examination.

G. During the execution of work under this Contract the Contractor shall be responsible for protecting any equipment or structures in the work and adjacent areas.

H. Secure and or pay for required authorizations from governmental agencies having jurisdiction. Building permits will be obtained by DPMC.

I. All work shall be guaranteed to be free from defects. Any defective materials or workmanship as well as damage to the work of all trades resulting from the same, shall be replaced or repaired as directed for the duration of stipulated guarantee periods.

1.4 SUBMITTALS

A. Provide the following in addition to and in coordination with the General Conditions. Within 30 calendar days of the Notice to Proceed, (NTP).

B. Product data: In accordance with procedures outlined in the General Conditions, submit:
(1) Materials list of items proposed to be provided under this Section, with sources of supply and manufacture.
(2) Manufacturer's specifications, catalog cuts and other data needed to prove compliance with the specified requirements;
(3) Product substitutions are to be requested in writing within (10) calendar days of the NTP, and only in conformance with General Conditions. At the time of submission of cuts for review of all substitutions, clearly indicates Specification Section, provide complete information on the original product <u>and</u> proposed product for review, and all deviations.
(4) Any substitutions requested by a contractor are to include all costs for related changes by other contractors. It is the responsibility of the contractor requesting the change to coordinate with and assume related costs for any other trade impacted by the substitution.

C. Samples:

(1) When so requested by the Engineer, promptly provide Samples on-loan of items scheduled to be exposed in the final structure.
(2) When specifically so requested by the Contractor and permitted by the Engineer, authorized Samples will be returned to the Contractor for installation on the Work.

D. Shop Drawings:

(1) Before fabrication or purchase of any work, major equipment or wiring, this Contractor shall prepare and submit shop drawings of conduits and major equipment for review. See General Conditions.
(2) Prepare and submit Shop Drawings plans, showing at a scale not smaller than 3/32" = 1'-0" all details pertaining to this project, specifically all plans and riser diagrams, etc. Maximum sheet size 30”x42”. All plans shall indicate device locations and device types, panel locations, wiring between all devices, device addresses, devices codes (can be included in as-builts), and all new conduit runs.

(3) Clearly identify by circle and by note "DEVIATION" and by note "INTERFERENCE", in large bold lettering, and deviations from Drawings and Specifications and any potential or unresolved interference condition and assume full responsibility for failure to do so.
(4) Submittal shall confirm fabrication and installation is in accordance with code recommendations and NEMA standards.

E. Installation Requirements: This Contractor shall furnish and install all equipment and accessories specified, indicated on the drawings or required to assure proper operation of all systems installed under this Section and of all connected equipment furnished under other Sections of these Specifications but requiring services furnished under this Section.

F. Manuals: Upon Completion of this portion of the Work, and as a condition of its acceptance, deliver to the Engineer seven copies of an operation and maintenance manual compiled in accordance with the provisions of the General Conditions, and these Specifications. Provide 10 manuals, include within each manual:

(1) As built drawings full size.
(2) Manufacturer cut sheets of all devices, panels and equipment in binder format with indexes and section separators.
(3) Manufacturer installation literature for each device in binder format with indexes and section separators.
(4) Manufacturer maintenance literature for each device in binder format with indexes and section separators.
(5) Specifications of wiring used on the job and were in binder format with indexes and section separators.
(6) All required software documentation.
(7) CD of as-built drawings in Auto Cad 14 format.
(8) Copies of all warranties and guarantees.

G. As-Built Drawings (maintain in accordance with General Conditions): concurrent with the progress of the Work, the Contractor shall maintain a set of as-built record prints noting <u>in red</u> all changes in the Work. Upon completion of the Work the marked-up set of prints shall be put into CAD format. Turn over complete set of CAD generated reproducible as built drawings. Indicate contractor’s name, address, phone and license number.

H. All required electrical permits; fees and inspections shall be arranged and paid for by the Contractor. The Contractor shall present to the Owner, properly signed, all required certificates of final inspection and authorization before the Work will be accepted as complete.

I. Project Schedule – Submit within 15 calendar days of NTP. Provide updates and two week look ahead of daily activity. Initial schedules shall be broken down into weekly task intervals for entire project duration time.

1.5 PRODUCT HANDLING

A. General Protection: Do not allow products and materials to become wet, soiled or covered with ice or snow. Comply with manufacturer's recommendations for handling, storage and protection during installation.

1.6 FACILITATION OF WORK

A. All materials, tools etc. being brought into the facility may be subject to inspection by facility representatives. Contractor shall understand that the logistical application of work shall be coordinated to the facility schedule and standards. This may result in lower productivity and work hours outside of normal schedules.

B. All materials, tools, machinery etc. required for work within the facility shall be of size adequate to fit within the physical constraints of the facilities bounds.

1.7 WORK RULES

A. Codes: all work performed on this building shall be in compliance with all pertinent codes, rules, ordinances, and regulations of the local state and national governing authorities.
B. Safety: all work performed and in connection with these drawings and specifications shall be in strict compliance with the latest OSHA safety and health standards.]
C. Openings or sleeves:
   1. Installed between floors, walls, or partitions of any type shall be made absolutely airtight. The contractor shall daily inspect the job for such installation to insure that this mandatory construction requirement is rigidly adhered to. The contractor shall also be responsible for patching, repairing, and sealing existing or new openings in all interior and perimeter shafts and chases to achieve airtight construction.
   2. All pipe penetrations through chases, walls or floors, which are fire-rated, shall be properly sealed to maintain fire protection. Contractor shall submit proposed U.L. system for review.
D. Drawings: do not scale drawings. All dimensions and existing conditions shall be checked and verified by the contractor at the site. Notify engineer of any deviations from the drawings.
E. Drawings are diagrammatic and are intended to show only general arrangements of duct/piping/wiring and equipment. Because of the small scale of the drawings, it is not possible to show or indicate all offsets, fittings, and accessories, which may be required to avoid existing piping or structural features.
F. All conduit, etc., shall be installed in a manner, which will not deface or alter any areas. Routing of the above equipment shall be approved by the architect/engineer prior to installation.
G. Report any discrepancies found in the drawings and/or in the specifications during the bidding process for clarification by the architect/engineer.
H. Any physical installation modifications, due to field conditions, shall be resolved by the contractor in accordance with the recommendations of the engineer.
I. Coordination: this contractor shall coordinate all work with contractors of other trades and with the requirements of the architect and owner. Perform all coordination with utility company and owner.
J. Schedule of work: arrange all work so as not to interfere with the normal operation of the present buildings and utilities.
K. Continuity of services: if it becomes necessary to temporarily interrupt service to any portion of the building or utility, the owner and utility company involved shall be notified sufficiently in advance to enable necessary arrangements to be made.
L. Cutting and patching: include all cutting and patching required for the installation of new conduit, equipment, and accessories, and for the removal of existing, equipment, and accessories. Any damage to existing finishes relative to cutting or other causes in the performance of this contract shall be made good by replacement or repairs in a manner satisfactory to the architect/engineer. All repair work shall match existing or new finishes including painting.
M. Dust, dirt and noise: include all cutting and patching and make all changes, relocations and installations with a minimum of noise. Protection shall include temporary barriers and

coverings. At no time shall this contractor interfere with the normal operation of present buildings by allowing debris to remain on the site or premises.

N. Cleaning: thoroughly clean all equipment and fixtures installed and remove all related rubbish and debris. Apply two coats of white enamel paint to all exposed cast iron parts of fixtures.

O. Miscellaneous ironwork: furnish and install all miscellaneous ironwork as required for conduit and equipment supports. All necessary additional structural steel members shall be furnished and installed as required to support the piping without excessive stress or strain on the existing building construction. Structural steel members shall conform to astm specification a-36. Include all required welding.

P. Painting: paint all new supports, iron and steel work installed under this contract. Paint with two coats of rust-o-leum rust preventative paint; first coat no. X-60 red primer; and second coat of colors selected by the architect. Paint piping, insulation, metal work, etc., with one prime coat and two finish coats of high quality paint, pratt and lambert, or equal. At all locations where it is necessary to cut and patch walls, floors, ceilings, etc. All painting at each location shall be performed under this contract; new finishes shall match existing finishes. Use one prime coat and one finish coat of pratt and lambert satin finish paint, or equal, of colors selected by the engineer. Include pipe name abbreviations, flow arrows, and color-coding where necessary to match existing installations. Include pipe name abbreviations and flow arrows at 15' intervals on straight runs of piping at branch connections, "t"s, and changes of directions.

Q. Access panels: furnish panels for access to all concealed valves, traps, unions, etc., not less than 24" x 24", flush type, tamper proof screwdriver operated, stainless steel in ceramic tile work; prime coated sheet steel in plaster, acoustical tile and painted walls. Furnish panels to general contractor for installation. Panels shall include 1-1/2 hour fire rated "B" label in fire rated construction; plus additional layers of gypsum board for higher fire ratings.

R. Demolition: these drawings, by their nature, con not reveal all conditions that exist on this site.

1. Drawings indicate the general layout and do not necessarily represent a complete field verified layout. Certain items are shown and indicated to remain or be removed. The contractor shall verify all existing conditions within the demolition areas. Report any discrepancies found to the engineer for clarification before proceeding.
2. All electrical equipment, piping conduit, wiring, etc., indicated on the drawings described in the notes and which is not required to function as part of the final system, shall be removed in its entirety. All removed material, unless designated for salvage, shall be immediately removed from the site and disposed of in accordance with all federal, state and local codes and regulations. Salvaged items shall be stored on site in a location designated by the job representative. Contractor shall pay for all fees and permits as necessary to complete the installation.
3. Locate and verify all new connections before proceeding with the work. Exposed conduits not required, as a part of the remodeled system shall be completely removed. All present concealed piping not required shall be suitably capped or plugged behind walls, above ceilings, or below floors and identified completely "dead". All major pieces of removed equipment, etc., shall remain the property of the owner and shall be stored by the contractor at the site where directed. All other removed miscellaneous items of equipment, such as fire alarm panels and devices shall be removed from the site.
4. Remove and replace existing ceiling tiles or other ceiling construction where required to install conduit systems above existing ceiling construction.

1.8 PROJECT MEETINGS.

A. Contractor shall be required to attend meetings. Meeting will be held at the site in area designated by the Facility.

B. Contractor shall demonstrate compliance with the approved construction schedule.

C. Contractor shall meet with Owner's representative.
D. Time of regular meetings to be determined at construction kick-off meeting.

1.9 TRAINING

A. Contractor shall include extensive training for the new installed equipment.
B. Contractor shall include (2) 4 hour sessions for training purposes. Training sessions shall be held within the Facility. Training sessions shall be scheduled by the Facility. Each session shall include up to 15 people intent on learning the operation and control of the new site specific equipment.
C. Manufacturer representatives shall be present within training sessions and be ready to answer questions.

1.10 CONFIRMATION OF ADDRESSES

A. Due to the extensive nature of the project, contractor shall include (2) 4hour working sessions with designated Facility personnel. Within these sessions, the contractor and the manufacturer shall record the 80 character alpha numeric address designation for each new device as dictated by the facility.
B. The Contractor and the manufacturer shall <u>not</u> arbitrarily choose the 80 character alpha numeric address designation. The designated facility personnel shall dictate.

1.11 PREVENTITIVE MAINTENANCE CONTRACT
The life safety preventative maintenance agreement shall include but not limited to:

A. TEST AND INSPECTION OVERVIEW: Under this agreement, Manufacturer trained technicians will perform inspections and diagnostic tests of panel functions, auxiliary and monitoring functions, and all accessible peripheral devices listed and currently connected to the facility Life Safety System. Tests will be scheduled in advance, and at the convenience of customer's staff.
B.

<u>Note</u>: technicians will need the assistance from customer's staff for access to all areas of the facility in order to locate devices and ensure efficient transition between areas. If equipment or devices are out of reasonable reach, customer will need to provide safe access (i.e. scaffolding, mechanical lift, ladders, etc.). If requested in advance, Manufacturer can provide this equipment for an additional cost.

CUSTOMER ASSISTED INSPECTIONS: Under this agreement provision, customer has agreed to provide at least one (1) able-bodied person to assist Simplex technicians for the duration of the visit. During this visit, customer's personnel will receive informal, hands-on training on basic system functions, and proper inspection procedures.

C. TESTING OF PERIPHERAL DEVICES: In accordance with NFPA 72, chap. 7, and manufacturer's recommended procedures, accessible peripheral devices shall be functionally tested in the following manner:

a. Smoke detectors shall be functionally tested using a smoke generator, punk stick, or other method acceptable to the manufacturer. Any canned aerosol smoke that leaves an oily residue shall not be used for testing of smoke detectors because of the danger of fouling. No device that uses open flame or acrid smoke shall be used to test smoke detectors.
b. Heat Detectors: (both rate of rise and fixed temperature) shall be tested with a device that administers an accurate and controlled temperature heat source.
c. Manual Pull Stations: shall be activated to verify operation, inspect electrical contacts, and ensure secure mounting.

d. Audible and visible signaling devices: shall need to be tested at least once to ensure proper operation and volume levels. After which, each initiating device should be tested silently for minimal disturbance.

DETECTOR CLEANING: To help minimize false alarms, and in accordance with NFPA, accessible smoke detection devices will be cleaned utilizing manufacturer's recommended procedures at a rate of: Annually (100% per year). Devices may be dismantled to expose the smoke chamber (where applicable) and cleaned using soft cloth, lint brush, cotton swabs, suitable cleaning solution, or non-electrostatic vacuum. (Note: Certain types of analog smoke sensors will be cleaned as needed per panel readings.)

SENSITIVITY TESTING: To ensure accuracy, and in accordance with NFPA guidelines, sensitivity testing will be performed on smoke detectors at a rate of 50% per year. Testing will be performed using only UL approved sensitivity testing equipment. Devices performing outside the listed sensitivity range will be re-cleaned and re-tested, and if necessary noted and recommended for replacement. (Note: Certain types of analog smoke sensors will automatically satisfy this requirement electronically.)

D. DOCUMENTATION: All accessible components and devices shall be logged for:

- Exact location of each device tested, including system address or zone location.
- Test results and applicable voltage readings.
- Any discrepancies found shall be noted individually and on a separate summary page.

Inspection Documentation shall be provided to customer's designated personnel, and copies shall be archived by Manufacturer.

Note: Certain additional services may be required by the respective Authorities Having Jurisdiction (or A.H.J.). (ref. NFPA 72 Chapter 7). Local A.H.J.'s or internal organizational requirements may be more restrictive than state requirements. The building owner or manager should be aware of applicable codes and references in order to ensure that contracted services are in compliance with all requirements.

E. EMERGENCY SERVICE:

This agreement provides for emergency service calls at no additional cost. 24hr./7 day Service – provided 24hrs./day, 7 days/week, including holidays. This provision includes labor, travel, and mileage charges for repairs associated with normal equipment failures. This provision covers labor to troubleshoot and diagnose system problems, and to replace panel components and failed peripheral devices (i.e. smoke detectors, pull stations, horns, strobes, etc.). Provide 4 hour response.

F. COMPLETE PARTS/COMPONENT REPLACEMENT:

Additionally, this agreement covers component replacement of the central processing unit, to include reprogramming of system due to failure, replacement of circuit boards, and all components in the control panels, annunciator panels, transponders, printers, keyboards monitors, and peripheral devices (smoke detectors, pull stations, audible/visible units, door contacts, etc.) associated with the system. This provision includes the cost of labor to install components, travel and mileage charges for service calls. Provision covers only equipment listed. Replacement of faulty wiring is not covered. BATTERY REPLACEMENT INCLUDED.

G. OTHER SPECIFIC INSTRUCTIONS:

Quarterly Circuit (Zone) Test for compliance with the Joint Commission for Accredited Hospitals. (Each system circuit (zone) will be tested electronically, or by testing peripheral devices in the field).

Semi-Annual Manual Pull Station Test (required by some Authorities Having Jurisdiction).

H. UNIT PRICES:

Provide unit prices for all items including those listed in E. due to vandalism for extent of Preventive Maintenance Agreement.

END OF SECTION 26 72 00

SECTION 26 72 10 – FIRE ALARM SYSTEM

PART 1 - GENERAL

1.1 SECTION INCLUDES

This specification provides the requirements for the installation, programming and configuration of a complete Addressable Intelligent Fire Alarm System Network for The Woodbridge Public Library, Woodbridge NJ. The system shall include, but not limited to: fire alarm control panel and remote annunciators, automatic and manually activated alarm Initiating and indicating peripheral devices and appliances, conduit, wire and accessories required to furnish a complete and operational fire alarm and communications system. The catalog numbers given are those of Edwards Systems Technology, EST/GE.

1.2 RELATED SECTIONS

Section 23 00 00 – Special Requirements for Mechanical and Electrical work

Section 26 01 00 – General Electrical Requirements

1.3 REFERENCES

The equipment and installation shall comply with the current provisions of the following standards:

National Electric Code, Article 760.

National Fire Protection Association Standards:

NFPA72 National Fire Alarm Code

International Building Code

International Mechanical Code

Local Building Codes.

Local Authorities Having Jurisdiction.

Underwriters Laboratories Inc.

The system and all components shall be listed by Underwriters Laboratories Inc. for use in fire protective signaling system under the following standards as applicable:

UL 864/UOJZ, APOU	Control Units for Fire Protective Signaling Systems.
UL 268	Smoke Detectors for Fire Protective Signaling Systems.
UL 268A	Smoke Detectors for Duct Applications.
UL 521	Heat Detectors for Fire Protective Signaling Systems.
UL 228	Door Holders for Fire Protective Signaling Systems.
UL 464	Audible Signaling Appliances.
UL 1638	Visual Signaling Appliances.
UL 38	Manually Activated Signaling Boxes.
UL 346	Waterflow Indicators for Fire Protective Signaling Systems.
UL 1971	Standard for Signaling Devices for the Hearing Impaired
UL 1481	Power Supplies for Fire Protective Signaling Systems.

UL 1711
Amplifiers for Fire Protective Signaling Systems.

Americans with Disabilities Act (ADA)

International Standards Organization (ISO)

ISO-9000

ISO-9001

1.4 SYSTEM DESCRIPTION

The Fire Alarm System supplied under this specification shall be a microprocessor-based network system. All control panel assemblies and connected field appliances shall be both designed and manufactured by the same company, and shall be tested and cross-listed as compatible to ensure that a fully functioning fire alarm system is designed and installed.

1.5 SUBMITTALS

1.05.a Product Data

The contractor shall submit six (6) complete sets of documentation within 30 calendar days after award of contract. Indicated in the documentation will be the type, size, rating, style, catalog number, manufacturers' names, photos, and/or catalog data sheets for all items proposed to meet these specifications. The proposed equipment shall be subject to the approval of the Architect/Engineer and no equipment shall be ordered or installed on the premises without that approval.

1.5.b Shop Drawings

A complete set of Shop Drawings, one for each unit sub-assembly, which requires that a field wire be connected to it, shall be supplied. The Shop Drawings shall be reproduced electronically from a master copy supplied by the manufacturer in digital format.

1.5. c Samples

Two (2) samples of each filed connected device (smoke detectors, intelligent modules, strobes, and speakers shall be provided to the contractor for their familiarization, if requested.

1.5. d Close-out Submittals

Three (3) copies of the following manuals shall be delivered to the building owner's representative at the time of system acceptance. The close out submittals shall include:

1. Operating manuals covering the installed fire alarm system.
2. Point-to-point diagrams of the entire fire alarm system as installed. This shall include all connected smoke detectors and addressable field modules. All drawings shall be provided in CAD and supplied in standard .DXF format. Vellum plots of each sheet shall also be provided. A system generated point-to-point diagram is required to ensure accuracy.
3. Name, address and telephone of the authorized factory representative.
4. All drawings must reflect device address and programmed characteristics as verified in the presence of the engineer and/or the end user unless device addressing is electronically generated and graphically printed.

1.6 QUALITY ASSURANCE

1.6.a Qualifications

The system provider shall provide proof of their qualifications as factory authorization and factory training for the products specified herein. These qualification credentials shall not be more than two years old, to insure up-to-date product and application knowledge on the part of the system provider.

1.6. b Warranty

Warranty all installation and workmanship for one (1) year from date of system acceptance, unless otherwise specified.

All GE manufactured components, i.e. control panels, annunciators, detectors, manual stations, audible and visual signals, shall be warranties for a period of three (3) years from date of system acceptance.

A copy of the manufacturers' warranty shall be provided with closeout documentation and included with the operation and installation manuals.

1.7 SYSTEM STARTUP, OWNERS INSTRUCTIONS, COMMISSIONING

System startup shall be performed by a factory trained and authorized engineered systems distributor. Certain functions of the systems startup procedure may be performed by the installing electrical contractor under the direction of the factory trained and authorized engineered systems distributor.

Owners' instructions and operation manuals, specific for this project, shall be supplied to the building operations staff by the factory trained and authorized engineered systems distributor. A "generic" or "typical" owners' instruction and operation manual shall not be acceptable to fulfill this requirement.

Commissioning of the installed system shall be performed by the factory trained and authorized engineered systems distributor in the presence of the local AHJ, the building owners' representative, and a representative of the general contractor, if deemed appropriate.

A system generated device map, which will serve as an "as-built" drawing shall be provided to the local AHJ and the building owners' representative.

1.8 MAINTENANCE

Upon system acceptance, the factory trained and authorized engineered systems distributor who provided the system shall provide the owner with a proposal for a separate maintenance contract for a period of three (3) years from the date of system commissioning.

PART 2 - PRODUCTS

This Fire Alarm System Specification must be conformed to in its entirety to ensure that the installed and programmed Fire Alarm System will accommodate all of the future requirements and operations required by the building owner. Any specified item or operational feature not specifically addressed prior to bid date will be required to be met without exception.

The system shall be a Model EST3 as manufactured by Edwards Systems Technology and provided by their Strategic Partner, Systems Sales Corporation, Neptune, NJ, 732-751-0600. This specification is based upon the performance of not only the EST products but of the past performance of the system provider. EST providers other than Systems Sales Corporation are not automatically considered to be approved equals.

- Any deviation from the equipment, operations, methods, design or other criteria specified herein must be submitted in detail to the specifying Architect or Engineer a minimum of 10 working days prior to the scheduled submission of bids. Each deviation from the operation detailed in these specifications must be documented in detail, including page number and section number that list the system function for which the substitution is being proposed.

2.1 EQUIPMENT AND MATERIAL GENERAL REQUIREMENTS

All equipment furnished for this project shall be new and unused. All components and systems shall be designed for uninterrupted duty. All equipment, materials, accessories, devices, and other facilities covered by this specification or noted on contract drawings and installation specifications shall be the best suited for the intended use and shall be provided by a single manufacturer. If any of the equipment provided under this Specification is provided by different manufacturers, then that equipment shall be recognized as compatible by both manufacturers, and “Listed” as such by Underwriters’ Laboratories.

System installation and operations shall be verified by the manufacturer’s representative and a verification certificate presented upon completion. The manufacturer’s representative shall be responsible for an on-site demonstration of the operation of the system and initial staff training as required by the Architect and/or Consulting Engineer.

The system shall be capable of detecting the electrical location of each signature intelligent device including new and existing devices. It shall be possible to display the intelligent device map on the laptop PC.

If a device map cannot be generated by the control panel, the contractor must include a minimum of five (5) days to verify location of all wire runs while in the presence of the Architect/Engineer or building owner’s representative to verify all conduit and wire runs.

In addition, “As-Built” riser and wiring diagrams reflecting all T-Taps, each programmed device characteristic including detector type, base type, serial number, sensitivity setting and wire configurations will be provided to the Architect/Engineer, based on the information gathered during the verification process described above.

It shall be possible for authorized service personnel using a program/service tool or laptop PC to change the personality/function of a Signature Series Device to meet changes in building layout or environment. System changes shall be verified by the manufacturer’s representative and a verification certificate presented upon completion.

2.2 MANUFACTURERS

The base specification is based upon a networked addressable system as manufactured by GE Security. Equivalent Systems provided by Simplex or Siemens may be submitted for approval. If equipment of one of the named approved substitute manufacturers is to be submitted for approval as equivalent, the contractor shall, as part of the system submittal, list all exceptions taken to these Specifications, all variances from these Specifications and all substitutions of operating capabilities or equipment called for in these Specifications. Any such exceptions, variances or substitutions that were not listed and identified in the submittal, shall be grounds for immediate disapproval without comment. Final determination of compliance with these Specifications shall rest with the Engineer, who, at his discretion, may require proof of performance.

Service availability: The supplier shall have sufficient stock on hand and have a fully equipped service organization capable of guaranteeing response time within 8 hours of service calls, 24 hours a day, 7 days a week to service completed systems.

The engineered systems distributor of the fire alarm equipment specified herein shall provide a copy of their certificate of successful completion of an authorized training course given by the manufacturer of the fire alarm equipment.

2.3 EQUIPMENT

The fire alarm system shall be a multi-processor-based peer-to-peer network system designed specifically for Fire and Security applications. The fire alarm system shall be a Model EST3 as manufactured by Edwards Systems Technology (EST) and shall be UL listed under Standards 864 (control units for fire-protective signaling systems) and under categories UOJZ and APOU. The specified modules shall also be listed under UL 1076 (proprietary burglar alarm units and systems) under category APOU.

The fire alarm system shall include all required hardware and system programming to provide a complete and operational system, capable of providing the protected premises with the following functions and operations:

- Modular systems design, with a layered application design concept, including an “operational layer” and a “human interface layer”, to allow maximum flexibility of the system with a minimum physical size requirement.
- All System operational software is to be stored in FLASH memory. Control Panel disassembly, and replacement of electronic components of any kind shall not be required in order to upgrade the operations of the installed system to conform to future application code and operating system changes.
- Up to 128 Service Groups must be definable within the system program to allow the testing of the installed system based on the physical layout of the system, not on the wiring of the field circuits connected to the fire alarm control panels.
- Advanced Windows™-based system definition utility with program version reporting to document any and all changes made during system start-up or system commissioning. Time and date stamps of all modifications made to the program must be included to allow full retention of all previous program version data.
- System response to any alarm condition must occur within 3 seconds, regardless of the size and the complexity of the installed system.
- System Common Control Functions shall be automatically routed to any node of the system.

2.3.a The Fire Alarm System

Fire Alarm System Mechanical and Overall Feature Summary

The Fire Alarm System shall include the following features and shall support the following operations in each installed cabinet or node of the system:

- Up to 10 Signature Series Intelligent Device loops.
- Up to 125 Intelligent Smoke Detectors and 125 Intelligent Modules per SDC.
- Up to 120 Hardwired input/output Circuits.
- Up to 342 Manual Control (Input) Switches
- Up to 456 LED Annunciation Points
- Up to 63 Remote Display Units.
- Multi-Priority, token passing, peer-to-peer network connection of up to 64 system nodes wired as Class A (Style 7).
- Ground fault detection by panel, by signature data circuit, and by device module.
- Ability to download all system applications programs and “firmware” from a computer through any node on the system.

- True distributed intelligence, including microprocessor-based detectors and modules.
- AC power trouble delay adjustable from 4 Hours to 10 Hours.
- Removable, interlocked terminal blocks for the connection of the field wiring to the fire alarm control panel.
- Electronic addressing of field devices.
- Advanced power management
- Dead front construction.

2.3.a.2 Fire Alarm System Human Interface

System common controls and emergency user interface

The fire alarm system shall include an emergency operators' interface panel that shall include the following system annunciation and control functions:

System annunciation and control functions:

- Hands free emergency operation. The first and last highest priority event on the system shall be displayed automatically and simultaneously.
- Control panel internal audible signal shall have four programmable signal patterns, to allow for the easy differentiation between alarm, supervisory, trouble and monitor conditions within the installed system.

5 discreet "system status" LEDs:

- Power status LED - Green LED shall illuminate when AC power is present.
- Test status LED - Yellow LED shall illuminate when any portion of the system is in the test mode. A programmable timer shall cause the system to automatically exit the test mode after a period of system inactivity. This test LED shall function in a local or in a group mode.
- CPU fail status LED - Yellow LED shall illuminate when the panel controller has an internal failure.
- Ground fault status LED - Yellow LED shall illuminate when ungrounded wiring connected to the cabinets' power supply has continuity to ground. This feature shall function in either a local or group mode.
- Disable status LED - Yellow LED shall illuminate whenever any point or zone in the installed system is manually disabled.

4 discreet common control switches with associated status LEDs:

- Reset: depression of the reset switch starts the system-reset operation. The associated Yellow LED shall have three flash rates during this operation to inform the user of the progress status of the reset cycle. The LED shall flash fast during the smoke detector power down sequence, then it shall flash slowly during the restart phase, and shall illuminate steadily for the restoral phase. The LED shall extinguish when the system is back to normal mode. Each phase, as well the overall reset cycle shall be programmable to perform other functions.
- Alarm silence: depression of the alarm silence switch shall turn off all audible notification appliance circuits. The associated yellow LED illuminates when the alarm silence function is active, whether by the alarm silence switch, or by an integral software timer. Subsequent activation of the alarm silence switch shall resound the signals. Activation of the alarm silence switch shall be programmable to perform other functions.

- Panel silence: depression of the panel silence switch shall turn off the systems' internal audible signal when configured as a 'local' system. The associated yellow LED illuminates when the panel silence feature is activated.
- Drill switch / LED: depressing the drill switch activates the fire drill function. Yellow LED indicates that the fire drill function is active. The drill switch shall also be programmable to perform system functions other than the Drill function.

Other Operator Control Switches:

- Previous message switch: pressing the previous message switch shall scroll the display to show the preceding message in the selected queue. Holding the Previous Message Switch and pressing any queue select switch moves to the top of the respective queue event list. Scrolling through event messages may be done by the operator at any time.
- Next message switch: pressing the next message switch shall scroll the display to show the following message in the selected queue. Holding the previous message switch and pressing any queue select switch moves to the bottom of the respective queue event list. Scrolling through event messages may be done by the operator at any time.
- More details switch: Pressing the more details switch shall show the address and 42-character location message of the active device on display. If a zone is active, pressing the switch displays the address and message of active devices within the zone. When multiple devices are active, the "Previous/Next" message switch may be used to scroll through the messages.

The System Main Liquid Crystal Display:

The liquid crystal display shall provide the means to inform the System Operator with detailed information about the off-normal status of the installed fire alarm system. The main display shall automatically respond to the status of the system, and shall display that status on an 8 line by 21-character backlit alphanumeric graphical liquid crystal display.

Automatic Functions:

The following status functions shall be annunciated by the main liquid crystal display:

When the fire alarm system is in the "normal" mode, the LCD displays:

- The current date and time.
- A custom system title (2 lines X 21 characters).
- A summary total of the alarm history of the system.

With the fire alarm system in the alarm mode, the LCD shall automatically reconfigure into four logical windows.

Systems status window

The LCD shall show the system time, and the number of active points and disabled points in the system in this section of the LCD display.

Current event window

The LCD shall show the first active event of the highest priority in reverse text to highlight the condition to the emergency operator. The top line of the reversed text shall show the sequence number in which the displayed event was received, as well as its event type. The second and third lines of reversed text shall display an identification message related to the displayed event.

Last event window

The LCD shall show the most recent, highest priority event received by the system.

Type status window

The LCD shall show the total number of active events in the system, by event type. There shall be four different system event types that shall be displayed, “alarm events”, “supervisory events”, “active trouble events”, and “active monitor events”.

System message processing:

In order to simplify, and to clarify the system status information that is given to the emergency operator, the main LCD shall include queues for each of the system event types. The main LCD shall allow the emergency operator access to the system status information contained within those queues by pressing an associated queue select switch. Whenever there is an unacknowledged event in any of the system event queues, the associated status LED shall flash. Viewing each event listed in a queue shall acknowledge all events in that queue, and shall cause the associated LED to illuminate steady.

All messages contained in any of the system event queues shall be accessible for review by the emergency operator using the “previous/next” message switch. It shall be possible to route additional event information to a printer.

Maintenance menu:

The main LCD shall also allow the system operator to access system maintenance functions through a four level password system. The authorized system operator shall be able to access the following functions:

System status

The system shall allow the operator to determine the status of individual system components, including active points, disabled points, and active points by panel.

Enable

The system shall allow the operator to restore a disabled point in the system, allowing that point to operate as originally intended by the application program of the system.

Additionally, the system shall allow the operator to restore any group function, guard patrol function, Panel, system module, “software - defined zone”, operator control, or time control function.

Disable

The system shall allow the operator to disable any point in the system, inhibiting that point from operating as originally intended by the application program of the system.

Additionally, the system shall allow the operator to disable any group function, guard patrol function, Panel, system module, “software - defined zone”, operator control, or time control function within the system.

Activate

The system shall allow the operator to manually turn on any system output point, or system function. Alternate smoke detector sensitivity, message routing within the system, guard patrol timing, and check-in group timings shall be modifiable with this simple command from the control panel.

Restore

The system shall allow the operator to restore the primary operation to the smoke detector sensitivity and the message routing functions with this simple command from the control panel.

Control Output

The system shall allow the operator to manually command and control relays and LEDs. Relays shall be able to be commanded to “latch”, to energize as a “high priority”, or as a “low priority”, to “energize”, or to “de-energize”.

LEDs shall be able to be commanded to “latch”, to energize as a “high priority”, or as a “low priority”, to turn “on“, to turn “off”, to “slow blink”, or to “fast blink”.

Reports

The system shall provide the operator with system reports that give detailed description of the status of certain system parameters for corrective action, or for preventative maintenance programs. The system shall provide these reports via the main LCD, and shall be capable of being printed on any of the connected system printers.

- The system shall provide a report that gives a sensitivity listing of all detectors that have less than 75% environmental compensation remaining.
- The system shall provide a report that provides a sensitivity listing of any particular detector.
- The system shall provide a report that gives a listing of the sensitivity of all of the detectors on any given panel in the system, or any given SDC loop within any given panel.
- The system shall provide a report that gives a chronological listing of up to the last 1740 system events.
- The system shall provide a listing of all of the firmware revision listings for all of the installed network components in the system.

Program

The system shall allow the authorized operator to perform all of the following system functions:

- Set the system time
- Set the system date
- Set (change) the system passwords.
- Restart the system.
- Set the dates for the system holiday schedule.
- Clear the chronological system history file.

Test

The system shall allow the authorized operator to perform test functions within the installed system. Test functions shall be defined by the authorized operator to be performed on a per cabinet, circuit, or service group basis.

Local control and display annunciators

Each networked control panel in the installed system shall include local control and display annunciators. These annunciators shall have integral membrane style, tactile push-button control switches, for the control of system functions, and LEDs with programmable (software-controlled) flash rates and slide-in labels for annunciation of system events.

- The local control display annunciators shall provide the system with individual device annunciation.
- The local control display annunciators shall provide the system with individual device annunciation with device disable.

- The remote control display annunciators shall provide the system with individual alarm and trouble annunciation per device with device disable.
- The local control and display annunciators shall provide the system with groups of three switches that have software controlled interlocks to allow only one of the switches to be active at any time. The switch triads shall be used for all of the fan and damper controls in the protected premises.

2.3.a.3 Remote Annunciators

Each networked remote panel in the installed system shall include a remote control and display annunciator. These annunciators shall have integral membrane style, tactile push-button control switches for the control of system functions, and LEDs with programmable (software-controlled) flash rates and slide-in labels for annunciation of system events. All remote annunciators shall be an integral part of the Peer to Peer Network capable of displaying 160,000 points. Annunciators that are dependent on a specific Node for operation will not be acceptable.

- The remote control display annunciators shall provide the system with individual device annunciation.
- The remote control display annunciators shall provide the system with individual device annunciation with device disable.
- The remote control display annunciators shall provide the system with individual alarm and trouble annunciation per device with device disable.
- The remote control display annunciators shall provide the system with groups of three switches that have software controlled interlocks to allow only one of the switches to be active at any time. The switch triads shall be used for all of the manual zone/floor paging operations in the protected premises.
- The remote control and display annunciators shall be provided to provide the system with groups of three switches that have software controlled interlock to allow only one of the switches to be active at any time. The switch triads shall be used for all of the fan and damper controls in the protected premises.

2.3.a.4 Fire alarm system operations interface:

SDC Card

The signature device card (SDC) shall be the interface between the networked fire alarm control panels and the signature series detectors and modules.

The communications format between the SDC and the signature series devices shall be 100% digital. Communications to devices must incorporate broadcast polling and direct address search to ensure the fastest reporting of off-normal conditions to the system human interface layer.

It shall be possible to wire the SDC as Class A (Style 6 or Style 7) or Class B (Style 4) without twisted or shielded wire. It must be possible to wire branch circuits (T-Taps) from Class B Circuits.

The associated controller (3-SSDC), through the SDC, shall provide the ability to set the sensitivity and alarm verification of each of the individual intelligent detectors on the circuit. It shall be possible to automatically set the sensitivity of individual intelligent detectors during day and night periods.

It shall be possible for the SDC to address all intelligent devices connected to it without having to set switches at the individual devices.

It shall be possible to obtain a mapping report of all devices connected to the circuit for confirmation of “as-built” wiring. The map shall show physical wiring of t-taps, device types, and the panel addresses of devices connected to the circuit. The SDC shall be capable of reporting unexpected additional device addresses and changes to the wiring in the data circuit. A specific trouble shall be reported for any off-normal non-alarm condition.

The SDC shall be able to report the following information on a per intelligent device basis:

1. Device serial number
2. Device address
3. Device type
4. Current detector sensitivity values and the extent of environmental compensation.
5. Any of 32 possible trouble codes to specifically diagnose faults.

Should a signature driver controller CPU fail to communicate, the signature circuit shall go into the stand-alone mode. The circuit shall be capable of producing a loop alarm if an alarm type device becomes active during stand-alone mode. This feature shall be demonstrated to the Owner/Architect before final approval.

Hard wired NAC circuits

Provide where indicated on the plans supervised hard-wired notification appliance circuits (NAC) for the control of 24Vdc EST Genesis signaling appliances. The NAC shall be Class B (Style 4), and shall control up to 3.5 amps of power to the circuit.

Panel NAC's shall be power limited to 3.5A at 24Vdc and 4.1A at 20.4Vdc to support higher current demand by visible appliances at lower battery voltages.

Life Safety System Programmable Operations:

System Message Processing and Display Operations:

The fire alarm safety system shall allow network routing to be configured to any or all nodes (cabinets) in the network.

All of the system Printer ports can be configured to display any or all of the following functions:

Alarm

Supervisory

Trouble

Monitor

Service group

Each LCD display on each node (cabinet) in the system shall be configurable to show the status of any or all of the following functions anywhere in the system:

Alarm

Supervisory

Trouble

Monitor

The system shall provide the capability to label each of the system points with up to 256 characters of location message. The first 42 characters shall be directed to the LCD while the entire message shall be sent to the printer.

The system shall have the capability to provide up to 128 logical counting "AND" groups. Each group shall have a programmable activation number. Whenever the number of active devices in an "AND" group reaches the activation number, the "AND" groups rules will execute. It shall be possible to overlap "AND" groups by having devices appear in more than one group.

The system shall provide a means to monitor the well being of any or all of the occupants of the protected premises by means of a check-in group feature. The check-In group shall display an emergency alarm whenever any member of a check-in group fails to check-in during the programmable check-in period.

Subsequent check-in activations during the check-in period or activations outside of the check-in period shall also activate an emergency response. It shall be possible to have a minimum of 128 check-in groups. All event messages for the check-In feature shall be directable to any system monitor or printer.

The system shall have the ability to define a minimum of 64 guard patrols with up to 10 different tours each. For each tour it shall be possible to program a minimum-maximum time period between patrol stations. Each guard patrol can have up to 50 stations. Guard patrol can be started from the control panel or by operation of the first station in a tour. Guard patrol delinquencies occur when a guard is early to a station, late to a station and out of sequence. Delinquencies shall display at the control panel, perform programmable system responses, and may be directed to any printer.

The system shall have the ability to define a minimum of 128 Matrix Groups with up to 250 points each. For each matrix, it shall be possible to define a radius and an activation number. The radius number defines the proximity between detector locations. When two detectors activate at or within the value of the radius or whenever the number of active devices reaches the activation number the Matrix Group activates. It shall be possible to overlap Matrix groups by having devices appear in more than one group.

The system shall include the ability to define an alternate set of device commands that may be used in combination with the system test command for the testing of the connected signature series smoke detectors. This function shall disable the normal alarm command for each of the members of the group, so that the testing process will not result in an activation of the building evacuation signals, auxiliary relays or central station connections.

The system shall include time control functions that will have the ability to control any system output or function, or initiate any system operational sequence as a function of the month, day of week, date, hour, minute, or holiday.

The system shall include up to 600 software defined logical zone groups that may group any input from any signature data circuit, or other initiating device circuit, in order to control a system output or function, or initiate any system operational sequence. A device or IDC may be a member of one logical zone group. Each of these zones shall have an associated message.

The system shall provide the ability to download data from the signature series detectors to a P.C. while the system is on-line and operational in the protected premises. The downloaded data may then be analyzed in a diagnostic program supplied by the system manufacturer.

2.3. a.6 - Central Station Connection - EST3 Modem Communicator - 3-MODCOM

The system shall provided an off premise communications module capable of transmitting system events to multiple Central Monitoring Station (CMS) receivers. The module shall provide the CMS with point identification of system events via 4/2, Contact ID or SIA DCS protocols. <The module shall also be capable of transmitting alphanumeric system activity by event to a commercial paging system using TAP Pager protocol.> The dialer shall have the capability to support up to 255 individual accounts and to send account information to eighty (80) different receivers, each having a primary and secondary telephone access number. System events shall be capable of being directed to one or more receivers depending on event type or location as specified by the system designer. The module shall have a degrade mode capable of transmitting fire alarm signals to the CMS in the event of system CPU failure. The module shall provide a high speed (V.32bis or greater) modem function in order to upload and download system data to/from a remote location. It shall be the responsibility of the owner to provide two telephone lines terminated at RJ31X jacks adjacent to the communicator.

The fire alarm system supplier shall provide the owner a proposal for annual monitoring of the system prior to expiration of the initial 90-day period.

2.04 COMPONENTS

2.4.a Remote Booster Power Supplies

The remote booster power supply shall be EST type BPS10 incorporating a synchronized addressable signal control module so it is activated directly from the addressable loop, insuring signal synchronization throughout the entire facility. All initiating, notification, and low voltage power source circuits shall be power limited.

The booster power supply shall be provided with battery back-up. The batteries shall be of the sealed, lead-acid type and provide twenty-four (24) hours of normal standby operation and five (5) minutes of normal alarm operation at the end of the standby period. The batteries shall be supervised for placement and low voltage.

2.4.b Intelligent Detectors - General

The system intelligent detectors shall be capable of full digital communications using both broadcast and polling protocol. Each detector shall be capable of performing independent fire detection algorithms. The fire detection algorithm shall measure sensor signal dimensions, time patterns and combine different fire parameters to increase reliability and distinguish real fire conditions from unwanted deceptive nuisance alarms. Signal patterns that are not typical of fires shall be eliminated by digital filters. Devices not capable of combining different fire parameters or employing digital filters shall not be acceptable.

Each detector shall have an integral microprocessor capable of making alarm decisions based on fire parameter information stored in the detector head. Distributed intelligence shall improve response time by decreasing the data flow between detector and Analog loop controller. Detectors not capable of making independent alarm decisions shall not be acceptable. Maximum total digital loop response time for detectors changing state shall be 0.5 seconds.

Each detector shall have a separate means of displaying communication and alarm status. A green LED shall flash to confirm communication with the Analog loop controller. A red LED shall flash to display alarm status. Both LEDs on steady shall indicate alarm-standalone mode status. Both LEDs shall be visible through a full 360 degree viewing angle.

The detector shall be capable of identifying up to 32 diagnostic codes. This information shall be available for system maintenance. The diagnostic code shall be stored at the detector.

Each smoke detector shall be capable of transmitting pre-alarm and alarm signals in addition to the normal, trouble and need cleaning information. It shall be possible to program control panel activity to each level. Each smoke detector may be individually programmed to operate at any one of five (5) sensitivity settings.

Each detector microprocessor shall contain an environmental compensation algorithm that identifies and sets ambient “Environmental Thresholds” approximately six times an hour. The microprocessor shall continually monitor the environmental impact of temperature, humidity, other contaminates as well as detector aging. The process shall employ digital compensation to adapt the detector to both 24-hour long term and 4-hour short-term environmental changes. The microprocessor shall monitor the environmental compensation value and alert the system operator when the detector approaches 80% and 100% of the allowable environmental compensation value. Differential sensing algorithms shall maintain a constant differential between selected detector sensitivity and the “learned” base line sensitivity. The base line sensitivity information shall be updated and permanently stored at the detector approximately once every hour.

The intelligent Analog device and the Analog loop controller shall provide increased reliability and inherent survivability through intelligent Analog standalone operation. The device shall automatically change to standalone conventional device operation in the event of a loop controller polling communications failure. In the Analog standalone detector mode, the Analog detector

shall continue to operate using sensitivity and environmental compensation information stored in its microprocessor at the time of communications failure. The Analog loop controller shall monitor the loop and activate a loop alarm if any detector reaches its alarm sensitivity threshold.

Each signature series device shall be capable of automatic electronic addressing and/or custom addressing without the use of DIP or rotary switches. Devices using DIP or rotary switches for addressing, either in the base or on the detector shall not be acceptable.

The intelligent Analog detectors shall be suitable for mounting on any Signature Series detector mounting base.

2.4.b.1 Fixed temperature heat detector, SIGA-HFS

Provide intelligent fixed temperature heat detectors SIGA-HFS as indicated on the plans. The heat detector shall have a low mass thermistor heat sensor and operate at a fixed temperature. It shall continually monitor the temperature of the air in its surroundings to minimize thermal lag to the time required to process an alarm. The integral microprocessor shall determine if an alarm condition exists and initiate an alarm based on the analysis of the data. Systems using central intelligence for alarm decisions shall not be acceptable. The heat detector shall have a nominal alarm point rating of 135ºF. The heat detector shall be rated for ceiling installation at a minimum of 70 ft centers and be suitable for wall mount applications.

2.4.b.2 Fixed temperature/rate of rise heat detector, SIGA-HRS

Provide intelligent combination fixed temperature/rate-of-rise heat detectors SIGA-HRS as indicated on the plans. The heat detector shall have a low mass thermistor heat sensor and operate at a fixed temperature and at a temperature rate-of-rise. It shall continually monitor the temperature of the air in its surroundings to minimize thermal lag to the time required to process an alarm. The integral microprocessor shall determine if an alarm condition exists and initiate an alarm based on the analysis of the data. Systems using central intelligence for alarm decisions shall not be acceptable. The intelligent heat detector shall have a nominal fixed temperature alarm point rating of 135ºF and a rate-of-rise alarm point of 15ºF per minute. The heat detector shall be rated for ceiling installation at a minimum of 70 ft centers and be suitable for wall mount applications.

2.4.b.3 Photoelectric smoke detector, SIGA-PS

Provide intelligent photoelectric smoke detectors SIGA-PS as indicated on the plans. The analog photoelectric detector shall utilize a light scattering type photoelectric smoke sensor to sense changes in air samples from its surroundings. The integral microprocessor shall dynamically examine values from the sensor and initiate an alarm based on the analysis of data. Systems using central intelligence for alarm decisions shall not be acceptable. The detector shall continually monitor any changes in sensitivity due to the environmental affects of dirt, smoke, temperature, aging and humidity. The information shall be stored in the integral processor and transferred to the analog loop controller for retrieval using a laptop PC or the SIGA-PRO signature program/service tool. The photo detector shall be rated for ceiling installation at a minimum of 30 ft (9.1m) centers and be suitable for wall mount applications. The photoelectric smoke detector shall be suitable for direct insertion into air ducts up to 3 ft high and 3 ft wide with air velocities up to 5,000 ft/min. without requiring specific duct detector housings or supply tubes.

The percent smoke obscuration per foot alarm set point shall be field selectable to any of five sensitivity settings ranging from 1.0% to 3.5%. The photo detector shall be suitable for operation in the following environment:

- Temperature: 32ºF to 120ºF
- Humidity: 0-93% RH, non-condensing
- Elevation: no limit

2.4.b.4 Standard detector mounting bases, SIGA-SB

Provide standard detector mounting bases SIGA-SB suitable for mounting on <North American 1-gang, 3½" or 4" octagon box and 4" square box. The base shall, contain no electronics, support all Signature Series detector types and have the following minimum requirements:

- Removal of the respective detector shall not affect communications with other detectors.
- Terminal connections shall be made on the room side of the base. Bases which must be removed to gain access to the terminals shall not be acceptable.
- The base shall be capable of supporting one (1) Signature Series SIGA-LED Remote Alarm LED Indicator. Provide remote LED alarm indicators where shown on the plans.

2.4.b Intelligent Modules -- General

It shall be possible to address each intelligent signature series module without the use of DIP or rotary switches. Devices using Dipswitches for addressing shall not be acceptable. The personality of multifunction modules shall be programmable at site to suit conditions and may be changed at any time using a personality code downloaded from the Analog Loop Controller. Modules requiring EPROM, PROM, ROM changes or Dipswitch and/or jumper changes shall not be acceptable. The modules shall have a minimum of 2 diagnostic LEDs mounted behind a finished cover plate. A green LED shall flash to confirm communication with the loop controller. A red LED shall flash to display alarm status. The module shall be capable of storing up to 24 diagnostic codes that can be retrieved for troubleshooting assistance. Input and output circuit wiring shall be supervised for open and ground faults. The module shall be suitable for operation in the following environment:

- Temperature: 32ºF to 120ºF (0ºC to 49ºC)
- Humidity: 0-93% RH, non-condensing

2.4.c Single input module, SIGA-CT1

Provide intelligent single input modules SIGA-CT1. The single input module shall provide one (1) supervised class B input circuit capable of a minimum of 4 personalities, each with a distinct operation. The module shall be suitable for mounting on 2 ½" deep 1-gang boxes and 1 ½" deep 4" square boxes with 1-gang covers. The single input module shall support the following circuit types:

- Normally-Open Alarm Delayed Latching (waterflow switches)
- Normally Open Active Non-Latching (fans, dampers, doors, etc.)
- Normally-Open Active Latching (supervisory, tamper switches, generator status, kitchen hood)

2.4.d Dual input module, SIGA-CT2

Provide intelligent dual input modules SIGA-CT2. The dual input module shall provide two (2) supervised class B input circuits each capable of a minimum of 4 personalities, each with a distinct operation. The module shall be suitable for mounting on 2 ½" deep 1-gang boxes and 1 ½" deep 4" square boxes with 1-gang covers. The dual input module shall support the following circuit types:

- Normally open alarm delayed latching (waterflow switches)
- Normally open active non-latching (monitor, fans, dampers, doors, etc.)
- Normally open active latching (supervisory, tamper switches, generator status, kitchen hood)

2.4.e Single input signal module, SIGA-CC1S

Provide intelligent single input synchronized signal modules SIGA-CC1S. The single input signal module shall provide one (1) supervised Class B output circuit capable of a minimum of 2

personalities, each with a distinct operation. The module shall be suitable for mounting on 2 ½" deep 2-gang boxes and 1 ½" deep 4" square box with 2-gang covers.

2.4.f Control Relay Module, SIGA-CR

Provide intelligent control relay modules SIGA-CR. The control relay module shall provide one form "C" dry relay contact rated at 2 amps @ 24 Vdc to control external appliances or equipment shutdown. The control relay shall be rated for pilot duty and releasing systems. The position of the relay contact shall be confirmed by the system firmware. The control relay module shall be suitable for mounting on 2 ½" deep 1-gang boxes and 1 ½" deep 4" square boxes with 1-gang covers.

2.4.g Intelligent Manual Pull Stations – General

It shall be possible to address each Signature Series fire alarm pull station without the use of DIP or rotary switches. Devices using Dipswitches for addressing shall not be acceptable. The manual stations shall have a minimum of 2 diagnostic LEDs mounted on their integral, factory assembled single or two stage input module. A green LED shall flash to confirm communication with the loop controller. A red LED shall flash to display alarm status. The station shall be capable of storing up to 24 diagnostic codes that can be retrieved for troubleshooting assistance. Input circuit wiring shall be supervised for open and ground faults. The fire alarm pull station shall be suitable for operation in the following environment:

- Temperature: 32ºF to 120ºF (0ºC to 49ºC)
- Humidity: 0-93% RH, non-condensing

2.4.h Double Action Manual Pull Station, SIGA-278

Provide intelligent double action, single stage fire alarm stations SIGA-278. The fire alarm station shall be of lexan construction with an internal toggle switch. Provide a key locked test feature. Finish the station in red with white "PULL IN CASE OF FIRE" lettering. The manual station shall be suitable for mounting on 2½" deep 1-gang boxes and 1½" deep 4" square boxes with 1-gang covers.

2.4.h1 Stopper covers for manual stations

Furnish and install Model No. STI-1130 Stopper II Lexan protective covers with built-in warning horn.

2.4.i Notification appliances -- General

All appliances shall be UL Listed for Fire Protective Service.

All strobe appliances or combination appliances with strobes shall be capable of providing the "Equivalent Facilitation" that is allowed under the Americans with Disabilities Act Accessibilities Guidelines (ADA(AG)), and shall be UL 1971Listed.

All appliances shall be of the same manufacturer as the Fire Alarm Control Panel specified to assure absolute compatibility between the appliances and the control panels, and to assure that the application of the appliances is done in accordance with the single manufacturer's instructions.

Any appliances that do not meet the above requirements, and are submitted for use must show written proof of their compatibility for the purposes intended. Such proof shall be in the form of documentation from all manufacturers that clearly states that their equipment (as submitted) is 100% compatible with each other for the purposes intended.

2.4.i.1 Self-Synchronized Strobes

Strobes

Self-Synchronized Strobes shall be Edwards Model No. G1RF-VM multi-candela synchronized flash outputs. They shall be UL listed for Fire Protective Service and comply with ADA requirements. Strobes shall mount in a 1-gang electrical box (2-1/8” deep). All strobes shall have lens markings oriented for wall mounting.

2.04.i.2 Horn/Strobes

Provide electronic horn/strobes manufactured by EST, Cat. No. G1RF-HDVM Series. The horn/strobe shall have a red plastic housing. A synchronized temporal pattern sound output level of 97-dBA average shall be provided. The strobe shall provide multi-candela synchronized flash outputs. The strobe shall have lens markings oriented for wall mounting. Horn/strobe shall mount to 1-gang electrical box (2-1/8” deep) electrical box.

PART 3 - EXECUTION

The entire system shall be installed in a skillful manner in accordance with approved manufacturers manuals and wiring diagrams. The contractor shall furnish all conduit, wiring, outlet boxes, junction boxes, cabinets and similar devices necessary for the complete installation. All wiring shall be of the type recommended by the NEC, approved by local authorities having jurisdiction for the purpose, and shall be installed in dedicated conduit throughout.

All penetration of floor slabs and firewalls shall be fire stopped in accordance with all local fire codes.

End of Line Resistors shall be furnished as required for mounting as directed by the manufacturer.

All wiring shall be installed according to NEC standards per the drawings submitted by the authorized Engineered Systems Distributor, unless otherwise noted.

3.1 FIELD QUALITY CONTROL

The system shall be installed and fully tested under the supervision of trained manufacturer's representative. The system shall be demonstrated to perform all the functions as specified. The service of a competent, factory-trained engineer or technician authorized by the manufacturer of the fire alarm equipment (Systems Sales Corporation) shall be provided to technically supervise and participate during all of the adjustments and tests for the system. All testing shall be in accordance with NFPA 72, Chapter 10.

FINAL SYSTEM ACCEPTANCE

The final reports may be turned over in hard copy format, but also must be made available online for the owner’s review through an inspection portal that allows the user private access to their building, indicating each items tested and inspected, along with the results of the individual tests. Any final system acceptance that does not include this will not be considered as part of meeting the specification and will be deemed not acceptable. Proof at time of initial submittal of this feature must be made available by submitting the owner’s login name and password with the initial equipment submittal. If it is not included at that time, the submittal will be rejected without review. Multiple submissions will incur a review charge by the owner and or their representatives.

3.2 EXAMINATION

Prior to the commencement of any of the work detailed herein, an examination and analysis of the areas where the fire alarm system and all associated components are to be installed shall be made.

Any of these areas that are found to be outside the manufacturers' recommended environments for the particular specified products shall be noted on a site examination report which shall be given to the Electrical Engineer/Architect.

Any shorts, opens, or grounds found on existing wiring shall be corrected prior to the connection of these wires to any panel component or field device.

3.3 DEMONSTRATION

Each of the intended operations of the installed fire alarm system shall be demonstrated to the building owner's representative and the local authority having jurisdiction by the system supplier.

END OF SECTION 26 72 10

SECTION 26 73 10 – TWO WAY EMERGENCY COMMUNICATIONS SYSTEMS

PART 1 GENERAL

1.1 SUMMARY

Equipment and materials used shall be standard components that are manufactured and available for purchase as standard replacement parts as long as the product is commercially available from the manufacturer.

1.2 QUALITY ASSURANCE

A. All command unit installation, configuration, setup, programming, and related work shall be performed by electronic technicians thoroughly trained by the manufacturer in the installation and service of the equipment provided.

B. All equipment shall be warrantied against any defects in material and workmanship under normal use for a period of sixty (60) months beginning on the earlier of (1) sale to an end customer, or (2) six (6) months after the equipment leaves the manufacturer's facility.

1.3 CERTIFICATIONS AND STANDARDS

A. The command unit shall be designed to meet the following standards:
   1. NFPA 72: National Fire Alarm and Signaling Code (2022), §24.10
   2. International Building Code (IBC) (2021), §1009.8
   3. Accessibility
      a. ADA Accessibility Guidelines (ADAAG) (2010), Ch. 7
      b. ANSI ICC A117.1 (2017): Accessible and Usable Buildings and Facilities, Ch. 7
   4. Safety
      a. UL 62368-1

PART 2 PRODUCTS

2.01 GENERAL

A. The command unit shall:
   1. Be an indoor-rated emergency communications system device comprised of an operating panel with dedicated buttons and LEDs for each analog call station and sub-command unit, a handset with volume control, a keyed reset switch, and a battery backup.
   2. Have an available configuration where all operable components are secured behind a door for use by authorized personnel.
   3. Provide analog call stations with the ability to establish communication with either an attendant at the local command unit handset, at up to two (2) sub-command units (i.e. secondary and tertiary on-premise answering points), or through a PSTN connection.
   4. Support and provide power to each analog call station for either up to five (5) or up to ten (10) units as an area of refuge (or area of rescue assistance) station used for emergency communications.
   5. Be half duplex in operation.
   6. Be programmable from either:
      a. A touch-tone telephone or a sub-command unit connected locally;
      b. Or a remote location if a connection to the public switched telephone network (PSTN) is made available.
   7. Provide an audible indicator for the following fault conditions:
      a. Open faults and short faults that occur on an analog call station conductive pathway.

b. PSTN connection fault.
c. System ground fault.
d. Low or disconnected battery backup.
e. Loss in primary power.

8. Provide a visual indicator for the following fault conditions:
   a. Open faults and short faults that occur on each individual analog call station conductive pathway.
   b. PSTN connection fault.
   c. System ground fault.
   d. Low or disconnected battery backup.
   e. Loss in primary power.
9. Provide a relay output for the following fault conditions:
   a. Any open fault or short fault that occurs on an analog call station conductive pathway.
   b. System ground fault.
   c. Low or disconnected battery backup.
   d. Loss in primary power.
10. Provide the following audible and visual indicators for operation of the system.
    a. Audible indicators for:
       1. Receiving an inbound call from an analog call station.
       2. Receiving an inbound call from a sub-command unit.
    b. Visual indicators for:
       1. Line status of the PSTN connection.
       2. Activation and call status for each individual analog call station.
       3. Activation and call status for each individual sub-command unit.
       4. Powered on status for the command unit.
11. Provide a relay output for any analog call station activation.

2.2 HARDWARE

A. The command unit enclosure shall:
   1. Be constructed of 16 Ga. cold-rolled steel (CRS).
   2. Be powder coated black or white.
   3. Measure approximately:
      a. 13.30 in. W x 18.00 in. H x 6.90 in. D for the configuration without a door.
      b. 14.60 in. W x 19.30 in. H x 7.60 in. D for the configuration with a door.
   4. Have mounting holes on the rear and two sides of the enclosure.
   5. Have multiple 0.5 in., 0.75 in., 1.0 in., and 1.25 in. conduit knockouts for wiring access.
   6. Have a faceplate that shall:
      a. Provide a means for internal component servicing.
      b. Be held in place by six (6) 10-24 screws.

B. The command unit enclosure with a door shall:
   1. Have a door with a keyed latch.
   2. Have a door with an acrylic window so that the operating panel light-emitting diodes (LEDs) are visible.

C. The command unit shall weigh approximately:
   1. 25 lbs. for the configuration without a door.
   2. 35 lbs. for the configuration with a door.

D. The command unit shall have an operating panel to provide a visual indication on the status of individual analog call stations. The operating panel shall:
   1. Have one (1) LED for each analog call station to indicate activation status—for a total of either five (5) or ten (10) LEDs.
   2. Have one (1) LED for each analog call station to indicate fault status in the event an open fault or a short fault occurs on an analog call station conductive pathway—for a total of either five (5) or ten (10) LEDs.

3. Have one (1) LED to indicate an activation status on the PSTN connection.
4. Have one (1) LED to indicate a fault status on the PSTN connection.
5. Have one (1) LED for each sub-command unit to indicate activation status—for a total of two (2) LEDs.
6. Have one (1) LED to indicate a system ground fault.
7. Have one (1) LED to indicate whether the battery backup is in a fully charged state or in a state of being charged.
8. Have one (1) LED to indicate a low or disconnected battery backup.
9. Have one (1) LED to indicate a normal status for primary power input.
10. Have one (1) LED to indicate a fault status for primary power input.

E. The local command unit handset shall:
1. Have a handset with a coiled cord.
2. Have a built-in volume control.

2.3 FUNCTIONALITY

A. Local Command Unit Handset
1. Receive calls from one (1) of the five (5) or ten (10) analog call stations.
2. When an incoming call has been received, the command unit shall audibly ring.
3. Originate calls selectively to one (1) of the five (5) or ten (10) analog call stations.

B. Sub-Command Unit
1. Serve as a secondary or tertiary on-premise answering point.
2. Receive calls from one (1) of the five (5) or ten (10) analog call stations.
3. When an incoming call has been received, the sub-command unit shall audibly ring.
4. Originate calls selectively to one (1) of the five (5) or ten (10) analog call stations.

C. Call Routing
1. The command unit shall be configurable with one of the following call routing procedures:
   a. Only route calls to the local command unit handset;
   b. Only route calls through a PSTN connection;
   c. Simultaneously call the local command unit handset and the sub-command unit(s)—the first attendant to answer the call on-premise establishes two-way communication with the analog call station.
   d. Route calls to the local command unit handset as primary, PSTN connection as secondary—the command unit will continue routing the call in round robin fashion until the call is answered or the call conversation timer expires;
   e. Route calls to the PSTN connection as primary, local command unit handset as secondary—the command unit will continue routing the call in round robin fashion until the call is answered or the call conversation timer expires;
   f. Route calls to some combination of local command unit handset, sub-command unit, and PSTN connection in round robin fashion until the call is answered or the call conversation timer expires.
2. The command unit shall be capable of queueing calls on a “first in, first out” (FIFO) basis.
   a. When a call is in session, subsequent calls shall be placed into a FIFO queue.
   b. When a call is completed, the next call in queue shall be, as configured during installation, automatically placed to an attendant at the local command unit handset, at a sub-command unit, or through a PSTN connection.
3. When the attendant terminates a call, the analog call station shall automatically return to an on-hook condition.
4. Automatic Call Merging
   a. The command unit can be configured so that any inbound phone call through the PSTN connection can automatically join a call in progress with an analog call station, local command unit handset, and/or sub-command unit.
   b. The local command unit handset shall automatically join a call in progress when taken off-hook.

c. Either sub-command unit shall automatically join a call in progress when taken off-hook.

5. All-Call to Analog Call Stations

a. The command unit shall allow a one-way audio page to be sent to every analog call station via an inbound call through a PSTN connection.

b. The command unit shall allow a one-way audio page to be sent to every analog call station through a sub-command unit.

c. The all-call shall only be initiated when a DTMF command is issued by the attendant at a sub-command unit or a call through a PSTN connection.

D. Push Buttons (Operating Panel)

1. Analog Call Stations Push Buttons

a. The operating panel shall provide a dedicated push button for each analog call station.

b. Each analog call station push button will service as a hold/talk button—pressing the respective button will place an active call on hold and a subsequent press will reengage the call for two-way communication.

c. Each analog call station push button shall also allow dialing from the command unit into any available analog call station.

2. PSTN Disconnect Push Button

a. The operating panel shall provide a PSTN disconnect push button.

b. The PSTN disconnect push button shall allow the PSTN connection to be disconnected once emergency services have arrived on-site, established communication with the attendant through the PSTN connection, and assumed control of the on-premise situation.

3. Sub-Command Unit Push Button

a. The operating panel shall provide a dedicated push button for each sub-command unit.

b. Each sub-command unit push button shall allow dialing from the command unit into any available sub-command unit.

E. Visual Indicators (Operating Panel)

1. Analog Call Station Status LEDs

a. When an analog call station has been activated but is not connected to an attendant at the local command unit handset, at a sub-command unit, or through a PSTN connection, the respective analog call station status LED shall flash.

b. When an analog call station has been activated and the call has been answered by an attendant at the local command unit handset, at a sub-command unit, or through a PSTN connection, the respective analog call station status LED shall be solidly illuminated.

c. Queued calls shall be indicated through the respective flashing analog call station status LED.

d. Calls on hold shall be indicated through the respective flashing analog call station status LED.

2. PSTN Connection Status LEDs

a. When there is a call connection attempt or an active call through the PSTN connection, the PSTN connection status LED shall be solidly illuminated.

3. Sub-Command Unit Status LEDs

a. When a sub-command unit has placed a call but is not active in a call, the respective sub-command unit status LED shall flash.

b. When a sub-command unit is active in a call, the respective sub-command unit status LED shall be solidly illuminated.

4. Battery Backup Status LED

a. When the battery backup is fully charged, the battery backup status LED shall be solidly illuminated.

b. When the battery backup is in the process of being charged, the battery backup status LED shall flash.

5. Primary Power Input Status LED
   a. When the command unit is powered, the primary power input status LED shall be solidly illuminated.
   b. When there is a loss in primary power, the primary power input status LED shall disengage.
6. Fault LEDs
   a. When an open fault or short fault occurs on an analog call station conductive pathway, the respective fault LED(s) shall flash.
   b. When the PSTN connection has an open or a short, its dedicated fault LED shall flash.
   c. When a system ground fault occurs, its dedicated fault LED shall flash.
   d. When the battery backup is disconnected or is low on voltage, its dedicated fault LED shall flash.
   e. When there is a loss in primary power, its dedicated fault LED shall flash.

F. Audible Indicator (Analog Call Station Prerecorded Voice Message)
1. An attendant at the local command unit handset, at a sub-command unit, or through a PSTN connection shall be capable of receiving a prerecorded voice message from the analog call station.
2. This prerecorded voice message shall notify the attendant of the analog call station location by playing at the beginning of the phone conversation.

G. Audible Fault Indicator
1. The command unit shall emit a steady tone when one of the following faults occur:
   a. Open faults and short faults that occur on an analog call station conductive pathway.
   b. PSTN connection fault.
   c. System ground fault.
   d. Low or disconnected battery backup.
   e. Loss in primary power.

H. Fault Reset Key Switch
1. The command unit shall have a fault reset key switch that can only be used by authorized personnel through a key.
2. The fault reset key switch can be used to:
   a. Temporarily silence the audible fault indicator for 23 hours or until the next timed supervisory test occurs. If the fault remains during the next timed supervisory test, the audible fault indicator will be provided again.

   Any LED fault indicators will remain in their trouble condition until the faults have been fully corrected.

   An audible double beep will also be heard when the fault reset key switch is toggled to silence the audible fault indicator.

   b. Deactivate the audible fault indicator when all faults have been corrected.
   c. Deactivate fault LEDs when all have been corrected.

2.4 INTERFACES

A. Analog Call Station Interface
1. The command unit shall be equipped with five (5) or ten (10) analog call station ports in order to support up to five (5) or ten (10) analog call stations.
2. Each analog call station interface port shall provide power to one (1) analog call station through one (1) twisted, shielded pair.
3. The command unit shall be equipped with a terminal block for the analog call station interface.

B. Sub-Command Unit Interfaces
1. The command unit shall be equipped with two (2) sub-command unit ports in order to support up to two (2) sub-command units.
2. The sub-command unit ports shall interface through a terminal block.

C. Public Switched Telephone Network (PSTN) Interface
1. The command unit shall be equipped with one (1) PSTN port.
2. The PSTN port shall interface through a terminal block.

D. Relay Output Interfaces
1. The command unit shall be equipped with five (5) relay output ports—each port is dedicated to indicate:
a. Call station active – this relay output (normally open, NO) will provide a contact closure when any call station is activated.
b. Power fault – this relay output (normally open, NO) will provide a contact closure when there is a loss in 24VDC power.
c. Battery fault – this relay output (normally open, NO) will provide a contact closure when the backup battery is disconnected or providing a low voltage output.
d. Ground fault – this relay output (normally open, NO) will provide a contact closure when a system ground fault is present.
e. Phone fault – this relay output (normally open, NO) will provide a contact closure when a short or open is present on any call station interface or PSTN connection.
2. The relay output ports shall interface through a terminal block.

E. Battery Backup Interface
1. The command unit shall be equipped with one (1) battery backup port.
2. The battery backup port shall interface through a terminal block.

F. Primary Power Input Interface
1. The command unit shall be equipped with one (1) 24VDC input port.
2. The primary power input port shall interface through a terminal block. \

2.5 POWER REQUIREMENTS

A. The command unit shall be powered by one of the following power sources:
1. Model AOR-PSU-5-10, an external Class 2 power supply with an input of 115VAC, 3.5A and an output of 24VDC, 2.5A;
2. Or an external, regulated power supply providing an output of 24VDC, 2.5A.

B. The command unit shall have a built-in battery backup.
1. In the event of a power source failure, the built-in battery backup shall provide the entire system with up to twenty-four (24) hours of standby time followed by up to four (4) hours of full system operation.

2.6 ENVIRONMENTAL

A. The command unit shall:
1. Operate in a temperature range of +32°F (0°C) to +120°F (+49°C).
2. Operate in a humidity range up to 95% RH (non-condensing).

2.7 MANUFACTURED UNITS

A. The command unit shall be one of the following models:
1. AOR-5, 5-Station Area of Refuge Command Unit;
2. AOR-5-DKL, 5-Station Area of Refuge Command Unit with Door and Keyed Latch;
3. AOR-10, 10-Station Area of Refuge Command Unit;
4. Or AOR-10-DKL, 10-Station Area of Refuge Command Unit with Door and Keyed Latch.PART 3 EXECUTION

3.1 INSTALLATION

A. The installer shall carefully follow instructions in documentation provided by the manufacturer to ensure all steps have been taken to provide a reliable, easy-to-operate system.
B. All equipment shall be tested and configured in accordance with instructions provided by the manufacturer prior to installation.
C. The command unit shall support surface mounting.
D. The command unit shall be capable of supporting flush mounting through one of the following available trim ring models:
   1. AOR-TR10, flush mount trim ring for 5- or 10-Station Area of Refuge Command Units without door;
   2. Or AOR-TR10-D, flush mount trim ring for 5- or 10-Station Area of Refuge Command Units with door.

END OF SECTION 26 73 10

SECTION 26 74 00 – CONDUIT RACEWAY SYSTEMS

PART 1 - GENERAL

1.1 RELATED DOCUMENTS

A. Section 23 00 00 - Special Requirements for Mechanical and Electrical Work shall apply.

B. Section 23 00 50 - Vibration Isolation and Seismic Restraints for HVAC, Fire Protection, Electrical and Plumbing.

1.2 RELATED WORK SPECIFIED ELSEWHERE

A. Section 26 11 10: Conduits, fittings and supports.

B. Section 26 13 10: Pull and junction boxes.

C. Section 26 13 40: Outlet boxes.

PART 2 - PRODUCTS (NOT USED)

PART 3 - EXECUTION

3.1 Provide empty conduits, sleeves, fittings bushings, outlets, pullboxes and plywood back boards and other electrical hardware to facilitate the installation of miscellaneous systems as specified in other sections.

3.2 Empty conduits shall be furnished with a 200-pound text nylon pull-on wire.

3.3 Termination location of all raceways shall be in accordance with the requirements of each particular system and as shown on the drawings.

END OF SECTION 26 74 00

SECTION 26 74 10 – EMERGENCY RADIO RESPONDER'S SYSTEM

PART 1 - GENERAL

1.1 RELATED DOCUMENTS

A. Section 23 00 00- Special Requirements for Mechanical and Electrical Work shall apply.

B. Section 23 00 50 - Vibration Isolation and Seismic Restraints for HVAC, Fire Protection, Electrical and Plumbing.

1.2 SCOPE

This guideline defines the requirements and standards for design of a two-way distributed antenna system to provide code compliant emergency responder radio coverage (ERRC).

1.3 REFERENCE DOCUMENTS: FEDERAL COMMUNICATIONS
|
IFC, "International Fire Code"
NJBC, "New Jersey Uniform Construction Code"
NFPA-72, "National Fire Alarm and Signaling Code Handbook"

1.4 DESIGN REQUIREMENTS

Provide Emergency Responder Radio Coverage (ERRC) two-way radio communication enhancement systems to enable communication between emergency responders (see list below) at the exterior perimeter of the building and emergency responders within the building. All areas of the building shall have code compliant radio coverage.

Provide drawings showing the general system architecture, equipment locations and routings. Provide a performance-based specification. The detailed technical design of the ERRC shall be by the selected and qualified firm's professional (Contractor).

ERRC shall be designed and constructed to comply with NFPA 72. Head end equipment, riser cables, directional couplers between riser cables and individual antenna cables, and donor antenna cables shall be located within two hour rated enclosures. Installation of this equipment and cabling in Building Entrance (BE) and Telecommunication Rooms (TR) that are two hour rated is an acceptable method of compliance.

System design shall include signal amplification on every floor of the building. Infrastructure (equipment space, electrical power and cable pathways) shall be installed throughout the building. However, install amplification only on floors that fail to pass the Contractor's pre-installation and acceptance tests.

System shall have spare capacity to install amplification later on floors that pass pre-installation testing but may drop below the required percent coverage or signal strength when construction and furniture move-in are completed.

Prior to construction of the ERRC system, the Contractor shall survey the building to determine if signal amplification is required. Any prior survey performed is only a snap shot in time and shall not be used to define scope requirements.

ERRC shall be registered under the most current applicable rulings of the Federal Communications Commission (FCC).

All equipment shall be Underwriters' Laboratories (UL) listed and labeled in accordance with applicable NEMA and ANSI standards. System shall be listed and comply with UL 2524.

Do not combine the ERRC with other radio systems such as:

- Wi-Fi systems.
- Pager systems.
- Medical telemetry systems.
- Cellular Phone Signal Reinforcement (CPSR)

Consider a design based on a regional ERRC antenna location.

1.5 SYSTEM REQUIREMENTS

ERRC shall utilize a bidirectional amplifier (BDA) with a distributed antenna system to achieve the required radio coverage.

ERRC shall use a Class A channelized amplifier set up to only use FD radio channels.

ERRC shall provide coverage on the 700 MHz and 800 MHz bands.
ERRC shall permit the simultaneous use and interoperability of analog and digital modulation radios.
ERRC shall be neutral host and nonproprietary.
ERRC shall not infringe on or overrun building (or adjacent building) communication systems or CPSR systems.

System shall have expandability to permit future additions and changes to the emergency responder radio frequencies.

ERRC headend and node equipment shall be securely attached to racks or backboards.
Identify all required outside plant fiber optic cables required to connect ERRC to remote antennas and/or other systems in other buildings.

1.6 PASSIVE INFRASTRUCTURE NETWORK

Passive infrastructure network shall be a combination of coax cables and directional couplers designed in such a manner to distribute signals with equalized losses to each antenna node.

Individual antenna feeds shall be coaxial cable installed in conduit or air dielectric coaxial cable with corrugated copper sheathing and PVDF jacket.

Install conduit for routing cabling through inaccessible ceilings, finished spaces with open ceilings and unfinished spaces below 10'-0.

Riser and feeder cables shall be plenum rated.
Cables shall be installed hidden from view except in open ceiling areas.
Antennas shall be Low PIM rated to reduce signal mixing and creation of harmonics.
Review antenna styles and mounting locations with Project Manager for aesthetic concerns and approval.

Use above ceiling antennas in dorm rooms, corridors and common areas. In other areas use low profile, flush-mount types installed on the underside of ceilings.

Antennas shall be securely attached independently from the work of other trades.

Antennas shall have identifying label or address number visible from the traffic path location.
Provide access for maintenance and code-required fall protection.

1.7 SUPPORT SYSTEMS AND SPACES

System shall include supervision of the ERRC antennas, signal boosters, power supplies and UPS as noted below.

- Supervisory and trouble alarm output contacts indicating an impairment. Connect the supervisory and trouble alarm contacts to the building fire alarm system.
- Fire alarm system shall transmit ERRC supervisory and trouble alarm signals to the appropriate supervising station.

ERRC shall be designed to maintain full system operation during a normal power outage. It shall transfer to and from an Uninterruptible Power Supply (UPS) without interruption. Size UPS to provide emergency power to ERRC headend and node equipment for a minimum of 12 hours. Connect the UPS to a generator-backed emergency power circuit if available.

- Active components shall be enclosed in a NEMA Type 4X enclosure.
- UPS batteries shall be of the sealed maintenance-free type.
- Provide battery ventilation in accordance with code as required.

Locate the headend equipment in an approved location.
Locate the node equipment in Telecommunications.

ERRC headend room and the Rooms containing ERRC equipment shall have continuous air conditioning to alleviate heat build-up within the rooms. Air conditioning systems shall be connected to normal power building circuits. The ERRC equipment can operate at an elevated temperature during a power outage.
ERRC headend room door shall be labeled to identify the presence of headend equipment.

1.8 SPECIFICATION REQUIREMENTS

Provide performance-based specifications. Require final and complete design, specifications and drawings be provided by the Contractor and submitted as part of the shop drawing process.
Include the following in the ERRC performance specification.

- ERRC equipment shall be FCC certified.
- Contractor shall be FCC licensed as required by code.
- Contractor shall submit detailed shop drawings for review to UM Design Manager and UM Radio Shop.
- Components shall be industry standard and readily available to U-M.
- Performance specifications for major components.
- Requirements for spare parts.
- Required separation distances between ERRC equipment and other mechanical, electrical and telecommunications equipment.
- Required separation distances between ERRC antennas and antennas of other radio systems.
- Components shall be labeled with unique part or address numbers which correspond to numbers shown on the Contractor drawings.
- Riser cables and cables for individual antenna feeders shall be installed in a neat and workman like manner. Each cable shall be individually supported.
- Furnishing factory-authorized service representatives to supervise the field assembly, connection of components, commissioning and testing of their respective systems.
- Contractor to submit a detailed work plan including narrative setting forth in sufficient detail how the Contractor will provide the scope of services.
- Contractor to attend progress meetings as required by the Construction Manager to maintain a thorough understanding of the project schedule and associated coordination issues.
- Utilizing iBwave Model Generation software, the Contractor shall perform a predictive RF propagation survey in native and AutoCAD formats and submit results to UM Design Manager.

Shop drawing submittals shall include the following:

- Proof of Contractor's qualifications.
- FCC registration number.
- Detail technical design package
- Submittal of design to AHJ for approval in accordance with NFPA-72.

- Testing and commissioning procedures
- Four paper copies of operation and maintenance manuals.
- An electronic file storage device (USB drive) containing the final system software including the master program generic to the system, the software associated with each programmable piece of equipment, and the software licenses and passwords required by the U-M Radio Shop to perform programming changes.
- A minimum of 8 hours of Owner training on operation and maintenance.
- One year of customer service from the date of acceptance by U-M.
- A parts and labor warranty for 1 year from date of acceptance by U-M.
- The first code-required annual operational test at the end of 1 year.

Code requires one set of ERRC technical information and documentation to be filed in the Fire

Command Center (if one exists) or in the ERRC headend room. Specify submittal of one set of the following:

- ERRC bid specifications.
- ERRC as-built drawings.
- Summary of ERRC frequencies utilized.
- Summary drawing showing locations of ERRC headend and node equipment, and antenna sites.
- Table of effective radiated power at antenna sites.

1.9 BIDDING REQUIREMENTS

Before bidding, forecast which floors will likely require amplification.
To bid the work, request a base bid price for the ERRC headend and for amplification on just the floors forecast to require amplification. Request an add price for adding amplification on each additional floor.

1.10 TESTING REQUIREMENTS

Arrange preliminary ERRC signal testing for renovations with UM Radio Shop to assist in forecasting building floors requiring signal amplification. Any survey performed by UM is only a snap shot in time and shall not be used to define scope requirements.

The Contractor shall perform pre-installation testing for percent coverage and signal strength in accordance with code. Testing shall not be performed until after the building is fully enclosed (roof, exterior skin, doors and windows are installed), and interior ceilings and walls are in place. Measure the percent coverage and signal strength in both the critical and general areas on each floor. Measure the signal strength receivable within the building and the signal strength received when transmitting from within the building.

The Contractor shall test for system interferences with building communication systems and CPSR systems prior to and after installation of ERRC system. The Contractor shall perform acceptance testing for percent coverage and signal strength in accordance with code. Testing shall be performed after furniture move-in.
Final testing shall be scheduled and performed in conjunction with EHS Fire Safety and U-M Radio Shop personnel. Project's Commissioning Authority will witness the testing.

- Demonstrate full compliance with IFC and NFPA 72 requirements.
- Demonstrate full compliance with specification requirements.
- Modify or add equipment, cables and antennas as required to achieve the code-required performance. Resolve specification deviations.

Testing for systems in buildings without an emergency generator system shall be performed on unit battery power. Normal power circuit serving the unit shall be shut off 6 hours prior to testing.
Signal strength test shall be conducted using a calibrated spectrum analyzer utilizing antennas similar in use by the emergency responders.

Final test results shall be spreadsheet form, along with building floor plans overlaid with test grid used in testing procedure. Each drawing grid shall show the test results for uplink signal, downlink signal and delivered audio quality (DAQ) measured. A DAQ level of 3 or better throughout the building is deemed acceptable. Testing and testing results shall comply with NFPA 72, Appendix A 14.

Test results shall indicate date, time and weather conditions at the time of the testing.

END OF SECTION 26 74 10

SECTION 26 75 00 – EMERGENCY GENERATOR

PART 1 - GENERAL

1.1 RELATED DOCUMENTS

A. Section 23 00 00 - Special Requirements for Mechanical and Electrical Work shall apply.

B. Section 23 00 50 - Vibration Isolation and Seismic Restraints for HVAC, Fire Protection, Electrical and Plumbing.

1.2 RELATED WORK SPECIFIED ELSEWHERE

A. Over current protection devices: Section 26 47 50.

B. Wires and cables: Section 26 12 00.

C. Conduits, fittings and supports: Section 26 11 10.

1.3 WORK INCLUDED

A. This specification outlines the requirements for installing an emergency natural gas fueled generator set complete with all labor, materials, and equipment to install and place into successful operation this unit and accessories. The unit shall be rated 750 kW continuous standby duty and shall be in accordance with the contract documents and these specifications.

B. O&R shall furnish the generator, enclosure, ATS, annunciator and other ancillary factory equipment. Contractor shall install and make operational.

C. The installation of the power generation system shall include but not be limited to the following:

1. UL 2200 Listed, natural gas fired, packaged engine driven generator set
2. Generator set mounted control panel
3. Engine radiator mounted cooling system
4. Main line output circuit breakers
5. Remote annunciator panel
6. Starting batteries & charger
7. Vibration isolation
8. Critical Exhaust silencer.
9. Weatherproof sound attenuated enclosure.
10. Gas lines and regulators

11. Factory and site commissioning

C. It is the intent under this contract to require an installation complete in every detail whether or not indicated on the drawings or specified. Consequently, the contractor is responsible for all details, devices, accessories and special construction necessary to properly install, adjust, test and place into successful and continuous operation the engine-generator set.

1.4 DESCRIPTION OF SYSTEM

A. Install a standby emergency power system to supply electrical power, in the event of a normal power failure, consisting of a liquid cooled engine, an AC alternator and system controls with all necessary accessories for a complete operating system, including but not limited to the items as specified hereinafter.

1.5 REQUIREMENTS OF REGULATORY AGENCIES

A. The electric generating system consists of a prime mover, generator, governor, coupling and all controls that be tested as a complete unit on a representative engineering model as required, not on the equipment to be sold, but on a separate prototype model.

B. Conform to standards of the National Fire Protection Association (NFPA), American Society for Testing and Materials (ASTM), Institute of Electrical and Electronics Engineers (IEEE), Underwriters Laboratories, Inc. (UL), American National Standards Institute (ANSI), National Electrical Manufacturers Association (NEMA), National Electric Code (NEC), Local Codes with Authorities having jurisdiction and any and all applicable inspection authorities.

PART 2 - PRODUCTS

2.1 Generator and transfer switch shall be furnished by O&R and installed by contractor.

PART 3 - EXECUTION

3.1 FACTORY TESTING

A. Before shipment of the packaged generator set equipment from the generator set manufacturers packaging plant, the engine-generator set assembly shall be tested under full rated load for performance and proper functioning of control and interfacing circuits. Tests shall include but not be limited to the following:

1. Engine speed (RPM)

2. Engine frequency

3. Average voltage

4. Average current

5. Observed power

3.2 OWNER'S MANUALS

A. One (1) set of project specified Owner's manuals specified to the product supplied must be forwarded within four (4) weeks after successful job site startup and testing of the packaged generator set; general operating instructions, preventive maintenance practices, wiring diagrams, schematics and parts exploded views must be included.

3.3 INSTALLATION

A. The contractor shall be responsible for off-loading of the generator set from the shipping trailer and placement onto a properly sized mounting foundation.

B. Contractor shall install the complete electrical generating system in accordance with the manufacturer's recommendations as reviewed and approved by the engineer.

3.4 SERVICE

A. The supplier of the electric plant and associated items shall have permanent service facilities within fifty miles of the job site. The maximum response time for a service call shall be two (2) hours from the time a call is placed by the end user; twenty-four (24) hour service shall also be available. The service facility shall stock 90 percent of all parts within 99 percent available within twenty-four (24) hours.

B. The generator set supplier shall include a one-year quarterly maintenance service program which shall include an annual oil and filter change. Provide a cost option for the end user to extend this service to a second year.

3.5 WARRANTY

A. The manufacturer's standard warranty shall in no event be for a period of less than two (5) years from date of initial start-up of the system and shall include repair parts, labor, reasonable travel expense necessary for repairs at the job site, and expendables (lubricating oil, filters, antifreeze, and other service items made unusable by the defect) used during the course of repair. Running hours shall not be a limiting factor for the system warranty by either the manufacturer or servicing distributor. Submittals received without written warranties as specified will be rejected in their entirety.

3.6 STARTUP

A. Provide adequate fuel supply for all testing and acceptance tests. Upon approval and acceptance of tests by AHJ and Owner, contractor shall fill fuel tank to its capacity.

B. The supplier of the electric generating plant and associated items covered herein shall provide factory trained technicians to perform a pre-checkout prior to performing the start up (after all equipment is installed by the contractor). All checkouts and testing are to occur during normal business hours and to include:

1. Verification of fluid levels (coolant and lubricating oil)

2. Equipment walk around inspection to verify no loose or broken items

3. Inspection to verify no loose or worn radiator belts

4. Verification of proper jacket water heater operation

5. Remove air cleaner shipping elements, as applicable

6. Static verification of control panel alarms and shutdowns

7. Verification of proper battery electrolyte operation

8. Verification of proper battery charger operation

9. Adjust vibration isolators as required

10. Verify that exhaust system is properly installed including rain cap

C. The supplier of the electric generating plant and associated items covered herein shall provide factory trained technicians to perform an equipment start-up upon completion of the pre-checkout to include:

1. Verification of manual starting from the local control panel
2. Verify that no fluid leaks exist
3. Verify proper gauge outputs
4. Perform any necessary adjustments (i.e., governor, etc.)

D. Perform a two-hour available building load test of the packaged generator set recording control panel values as noted above.

E. Also verify proper transfer switch interfacing to the generator set by performing a pull-the-plug test for a one-hour duration.

F. Conduct a four-hour operation and maintenance training session (on the emergency generator system) for operator personnel.

3.7 ACCEPTANCE

A. Upon completion of the installation of the Emergency power system shall be tested to ensure conformity to the requirements of the standard with respect to both power output and function.

B. The test shall be conducted after completion of the installation with all emergency power system accessory and support equipment in place and operating.

C. The authority having jurisdiction shall be given advance notification of the time at which the final test is to be performed so that the authority can witness the test.

D. The on-site installation test shall be conducted in the following manner:
1. With the prime mover in a “cold start” condition and the emergency load at standard operating level, a primary power failure shall be initiated by opening all switches or breakers supplying the primary power to the building or facility.
2. The test load shall be that load that is served by the emergency power system.
3. The time delay on start shall be observed and recorded.
4. The cranking time until the prime mover starts and runs shall be observed and recorded.
5. The time taken to reach operating speed shall be observed and recorded.
6. The voltage and frequency overshoot shall be recorded.
7. The time taken to achieve a steady-state condition with all switches transferred to

the emergency position shall be observed and recorded.

8. The voltage, frequency, and amperes shall be recorded.
9. The prime mover oil pressure and water temperature shall be recorded, where applicable.
10. The battery charge rate shall be recorded at 5-minute intervals for the first 15 minutes and at 15-minute intervals thereafter.
11. The load test with building load, or other loads (ie load bank) that simulate the intended load, shall be continued for the 2 hours maximum, observing and recording load changes and the resultant effect on voltage and frequency.
12. When primary power is returned to the building or facility, the time delay on retransfer to primary for each switch with a minimum setting of 5 minutes shall be recorded.

13. The time delay on the prime mover cooldown period and shutdown shall be recorded.

E. After completion of the test performed in 7.13.4.1, the prime mover shall be allowed to cool for 5 minutes.

F. A load shall be applied for a 2-hour, full load test. The building load shall be permitted to serve as part or all of the load, supplemented by a load bank of sufficient size to provide a load equal to 100 percent of the nameplate kW rating of the EPS, less applicable derating factors for site conditions.

G. The data specified in D (1) through D (10) shall be recorded at first load acceptance and every 15 minutes thereafter until the completion of the 2-hour test period.

H. The following shall be made available to the authority having jurisdiction at the time of the acceptance test:
1. Evidence of the prototype test.
2. A letter of compliance.
3. A manufacturer's certification of a rated load test at rated power factor with the ambient temperature, altitude, and fuel grade recorded.

END OF SECTION 26 75 00

SECTION 26 76 00 – AUTOMATIC TRANSFER SWITCHES

PART 1 - GENERAL

1.1 SCOPE

A. Install automatic transfer switches (ATS) with number of poles, amperage, voltage, withstand and close-on ratings as shown on the plans. Each automatic transfer shall consist of an inherently double throw power transfer switch mechanism and a microprocessor controller to provide automatic operation. The transfer switch and controllers shall be furnished by O&R and installed by Contractor.

1.2 RELATED DOCUMENTS

A. All of the Project "General Documents" apply to work specified in this Section. Consult them in detail for applicable instructions.

B. Section 23 00 00 - Special Requirements for Mechanical and Electrical Work shall apply.

C. Section 23 00 50 - Vibration Isolation and Seismic Restraints for HVAC, Fire Protection, Electrical and Plumbing.

1.3 CODES AND STANDARDS

The automatic transfer switches and controls shall conform to the requirements of:

A. UL 1008 - Standard for Transfer Switch Equipment

B. IEC 60947-6-1 Low-voltage Switchgear and Control gear; Multifunction equipment; Automatic Transfer Switching Equipment

C. NFPA 70 - National Electrical Code

D. NFPA 99 - Essential Electrical Systems for Health Care Facilities

E. NFPA 110 - Emergency and Standby Power Systems

F. IEEE Standard 446 - IEEE Recommended Practice for Emergency and Standby Power Systems for Commercial and Industrial Applications

G. NEMA Standard ICS10-1993 (formerly ICS2-447) - AC Automatic Transfer Switches

H. UL 508 Industrial Control Equipment

PART 2 - PRODUCTS

2.1 Generator and transfer switch shall be furnished by O&R and installed by contractor.

END OF SECTION 26 76 00

SECTION 27 05 00 – IT, TELECOM AND AV GENERAL CONTRACTOR REQUIREMENTS

1.1 SPECIFICATION

A. The following specification, prepared by Con Edison, for IT, Telecom and AV General Contractor Requirements with respect to the site location is included with this document:

SPECIFICATION NO. IT-CISD-GC-322-01

Consolidated Edison Company of New York
4 Irving Place, New York, New York 10003

Information Technology
Communications Infrastructure & Site Design

DESCRIPTION

General Contractor Requirements
R900 – Spring Valley Operations Center
Building Expansion

LOCATION
390 Route 59 West
Spring Valley, NY 10977

Prepared By: Ronald Devito Date: 04/07/2025
Systems Specialist

Reviewed By: Paul Nardelli Date: 04/09/2025
Systems Specialist

Approved By: Michael J. Ribarich Date: 04/09/2025
Systems Manager

END OF SECTION 27 05 00

Specification No. IT-CISD-GC-322-01

Consolidated Edison Company of New York
4 Irving Place, New York, New York 10003

Information Technology
Communications Infrastructure & Site Design

DESCRIPTION

General Contractor Requirements
R900 - Spring Valley Operations Center
Building Expansion

LOCATION

390 Route 59 West
Spring Valley, NY 10977

Prepared By: Ronald Devito
Systems Specialist
Date: 04/07/2025

Reviewed By: Paul Nardelli
Systems Specialist
Date: 04/09/2025

Approved By: Michael J. Ribarich
Systems Manager
Date: 04/09/2025

1.0 Project Overview

1.1 Orange and Rockland Utilities (ORU) is adding a three-story 48,000-square foot addition to Spring Valley Operations Center. This document details the construction requirements that the General Contractor must supply and perform to support the IT Telecom and AV installations.

2.0 Construction Requirements

2.1 IT Rooms

2.1.1 Architectural

- 2.1.1.1 There shall be no windows.
- 2.1.1.2 There shall be no false or suspended ceiling.
- 2.1.1.3 Ceilings shall be painted to reduce dust.
- 2.1.1.4 Walls and ceiling finishes shall be light in color to optimize lighting.
- 2.1.1.5 Location of lighting fixtures shall be coordinated with rack, cabinet, and cable runway locations shown in Attachment 03 IT Specification IT-CISD-LAN-322-01.
- 2.1.1.6 The flooring shall be antistatic tile.

2.1.2 Environmental

- 2.1.2.1 IT Rooms require 24/7/365 HVAC operation. Dual split unit required.
- 2.1.2.2 Location of HVAC units, piping and ducting shall be coordinated with proposed racks, cabinets, and cable runway locations shown in Attachment 03 IT Specification IT-CISD-LAN-322-01.

2.1.3 Power Requirements

- 2.1.3.1 One (1) dedicated 200-Amp panel is required in the Communications Room. Panel shall be fed from a generator backed up, non-building-UPS source.
- 2.1.3.2 Racks in the Communications Room require the following from the dedicated panel:
  - 2.1.3.2.1 Two (2) 5-20R 20-Amp outlets above the LAN Equipment Rack.
  - 2.1.3.2.2 Two (2) 5-20R 20-Amp outlets above the LAN Cabling Rack.
  - 2.1.3.2.3 Two (2) L5-30R 30-Amp outlets above the Security Cabinet.
  - 2.1.3.2.4 208V 20A Single-Phase Hard-Wired, No Outlets Two 120V Hots 1 Ground above the CCTN Rectifier Rack.
- 2.1.3.3 Outlets above the Communications Room racks shall be distributed in a Hubbell-Wiegmann wireway 2.5”x2.5” screw cover with knockouts (PN S22120) or equivalent.
- 2.1.3.4 Two (2) dedicated 5-20R 20-Amp outlets are required in each LAN Room from the 1st floor Communications Room dedicated panel, centered behind each rack/cabinet at the height of 6’-6” AFF as shown in Attachment 03 IT Specification IT-CISD-LAN-322-00.
- 2.1.3.5 At least One (1) dedicated 5-20R 20-Amp convenience outlet circuit is required within each IT Room from a source other than the 1st floor Communication Room dedicated panel.
- 2.1.3.6 One (1) 5-20R 20-Amp outlet for each LAN room and Comm room from the dedicated panel for a wall-mounted Femtocell at a height to be specified by the IT project manager.

2.1.4 Grounding and Bonding

- 2.1.4.1 A grounding conductor (GrC) bonded to building steel via cadweld is required in each IT Room.

2.1.4.2 The GrC shall be coordinated with the location of the Single Point Ground Bar as shown in Attachment 03 IT Specification IT-CISD-LAN-322-01.

2.1.4.3 The GrC shall be installed per reference standard IT-CISD-TGB-STD-11.

2.2 Work Area

2.2.1 Power Requirements

2.2.1.1 Reference the Audiovisual design package for all conference room and board room power requirements.

2.3 Cabling Pathways

2.3.1 CAT-6 cabling pathways are required into desk areas from the dropped ceiling space above including vertically down adjacent columns and horizontally to furniture raceways.

2.3.2 CAT-6A cabling pathways are required to WiFi access points in the dropped ceiling space.

2.3.3 Reference the IVCI Audiovisual design package for all conference room and board conduit, floor and wall box requirements.

2.3.4 As depicted on Attachment 05 – CCTN Routes, all CCTN fiber tube cables shall exit the new building 1st Floor Comm Room using the four CCTN EZ-Path sleeves and transit the hallways of the new building into the existing building. Thence, the tube cables shall transit the hallways of the existing building to the Spring Valley Old Data Center, Spring Valley Production Data Center, and Electric Control Center IDFs A and B.

2.3.5 CCTN Tube cables shall be supported by SnakeTray™ affixed to threaded rods. A single EZ-Path-44 sleeve shall be installed at the Point of Entry (POE) to the Spring Valley Old Data Center, Spring Valley Production Data Center, and Electric Control Center IDFs A and B.

2.3.6 CCTN fiber bundles shall be terminated in

2.3.6.1 Electric Control Center IDF A, Rack B2, Tray 5 to be installed in “RU” 20.

2.3.6.2 Electric Control Center IDF B, Rack B1, Tray 6 be installed in RU 28.

2.3.6.3 Spring Valley Production Data Center, Cabinet 1, Tray 4 to be installed in RU 30.

2.3.6.4 Spring Valley Old Data Center, Cabinet 5, Tray 4 to be installed in RU 22.

2.3.7 All Pathway routes and sizes shall be coordinated with the latest Power and Data Plan Drawing and IT Specification IT-CISD-LAN-322-01.

2.3.8 All conduits shall be installed per reference standard CISD Conduit Installation Standard Requirements.

3.0 Reference Standards

3.1 IT-CISD-TGB-STD – LAN Telecommunications Grounding and Bonding Standard

3.2 CISD Conduit Installation Standard Requirements

SPECIFICATION NO. IT-CISD-TGB-STD-11

Consolidated Edison Company of New York
4 Irving Place, New York, New York 10003

Information Technology
Communications Infrastructure & Site Design
(CISD)

DESCRIPTION

Standard Specification for Installation of
LAN Telecommunications Grounding & Bonding (TGB)

Prepared By:	Ron Devito Systems Specialist	Date: April 4, 2022
Reviewed By:	Michael J. Ribarich Systems Manager	Date: June 10, 2022
Approved By:	Michael J. Ribarich Systems Manager	Date: August 8 10, 2022

Printed on 9/9/2022

Table of Contents

1.0 PURPOSE 3
2.0 APPLICABILITY 3
3.0 USERS, REVIEWERS AND APPROVERS 3
4.0 EXCEPTIONS / DEVIATION PROCESS 3
5.0 TECHNICAL REQUIREMENTS 4
5.1 Technical Scope 4
5.2 Ground Cable Pathways 4
5.3 Telecommunications Grounding and Bonding 4
5.3.1 Approved Materials and Substitutions 4
5.3.2 Grounding Conductor (GrC) 4
5.3.3 Single Point Ground Bar (SPGB) 5
5.3.4 Master Ground Bar (MGB) 6
5.3.5 Equipment Ground Bar (EGB) 8
5.3.6 Floor Ground Bar (FGB) 8
5.3.7 Horizontal Rack-mount Ground Bar (HRGB) 9
5.3.8 Bonding to Bus Bars 10
5.3.9 Bonding Cables and Lugs 13
5.3.10 Equipment Cabinet Bonding Methodology 14
5.3.11 Equipment Isolation Methodology 15
5.3.12 Single Small Cabinet Installations 16
5.3.13 Outdoor Rated Cat/5e Grounding at a POE 17

1.0 PURPOSE

1.1 This specification provides the technical requirements for the design and installation of telecommunication grounding and bonding systems withing IT rooms and spaces.

2.0 APPLICABILITY

2.1 This specification applies to corporate sites, control, centers, data centers and field sites.

3.0 USERS, REVIEWERS AND APPROVERS

3.1 The users of this specification are members of IT Communications Infrastructure & Site Design (CISD) group responsible for the design and build of LAN physical infrastructure including telecommunication grounding and bonding systems. Other users are contractors who design and build telecommunication grounding and bonding systems.

3.2 The approver of the document is the CISD Systems Manager. CISD SMEs will propose changes to the CISD Systems Manager. Revised documents will be placed in group's SharePoint public folder.

3.3 The review process is ongoing as new parts and technologies develop and are utilized. A formal review will take place annually in January by the CISD group to capture any changes that may not yet been incorporated.

3.4 Training requirements will be met by formal technical training by outside by internal on the job training, and group collaboration.

4.0 EXCEPTIONS / DEVIATION PROCESS

4.1 CISD will follow a review and approval process for interim changes required during emergent situations.

4.2 Interim changes will be handled by email or verbal notification by the CISD Systems Manager and/or CISD SMEs.

4.3 The process and forum for communicating Interim changes will be periodic staff meetings or by teleconference scheduled by the CISD Systems Manager.

5.0 TECHNICAL REQUIREMENTS

5.1 Technical Scope

5.1.1 Unless otherwise stated in the bid specification or MiniPO, the work to be done by the Contractor as described in the Scope of Work section of the project specification (bid spec or MiniPO) shall be done in accordance with the requirements set forth in this document

5.1.2 Any deviation from the CISD materials and installation requirements listed below, must receive prior approval from the CISD project manager. Deviations not receiving prior written approval will be subject to replacement and/or correction at the Contractors expense.

5.2 Ground Cable Pathways

5.2.1 The CISD project manager is responsible for identifying preliminary ground cable pathways.

5.2.2 Since the pathways provided by the CISD project manager are preliminary, it is the Contractors responsibility to develop a defined cable pathway.

5.2.3 The pathways provided by the CISD Project manager are preliminary. It is the Contractors responsibility to ensure that NEC Code permits the pathways.

5.3 Telecommunications Grounding and Bonding

5.3.1 Approved Materials and Substitutions

5.3.1.1 All materials specified in the document shall be provided and installed by the installation contractor as indicated, using the listed parts. Equivalent parts may be supplied by providing the part specification sheet for review and obtaining written approval from the CISD project manager.

5.3.2 Grounding Conductor (GrC)

5.3.2.1 A Grounding Conductor shall be installed for all newly constructed and upgraded LAN Rooms. The term LAN Room applies to IT spaces housing LAN racks, cabinets, cable runway and equipment and can range in size to single wall-mount cabinets to multi-cabinet data centers.

5.3.2.2 Con Edison personnel or a designated Contractor shall be responsible for installing the grounding conductor as directed below.

5.3.2.3 Where a dedicated 4/0 AWG Communications Ground Riser exists:

5.3.2.3.1 A Grounding Conductor (GrC) consisting of a 4/0 AWG green insulated stranded copper wire shall be fused to the dedicated riser using a CADWELD process.

5.3.2.3.2 The weld between the GrC and the riser must remain visible for future inspection.

5.3.2.3.3 The GrC shall be routed to the LAN Room via the most direct route.

5.3.2.3.4 While routing the GrC to the LAN Room, it is imperative that there shall be no sharp bends in the cable.

5.3.2.3.5 The cable shall be electrically isolated from all structural metal. This includes concrete walls that may contain metal rebar.

5.3.2.3.6 The end of the GrC, minimally 5’ in length, shall be brought into the LAN Room.

5.3.2.3.7 A durable tag shall be affixed to the GrC that clearly notes the location of the weld to the Ground Riser.

5.3.2.4 Where there is no dedicated 4/0 AWG Communications Ground Riser:

5.3.2.4.1 Con Edison or their designated Contractor shall identify a main steel column or a steel beam that has electrical continuity with a main steel column.

5.3.2.4.2 Identify a clearly visible 3” by 3” section of building steel within the LAN Room and clear it of any insulating material (e.g. concrete, rust, paint, etc).

5.3.2.4.3 A 5’ length of GrC shall be fused to the previously cleared Building steel using a CADWELD process.

5.3.2.4.4 The weld between the GrC and the steel must remain visible for future inspection.

5.3.2.5 For either new construction or retrofit situations, where it is neither possible nor practical to use a CADWELD process due to potential fire or sparking damage, Contractor shall consult with and receive written approval from IT to use the following alternative method:

5.3.2.5.1 Con Edison personnel or a designated Contractor shall identify a main steel column or a steel beam that has electrical continuity with a main steel column.

5.3.2.5.2 Identify a 3” by 3” section of building steel that can be made easily accessible and clearly visible, within or as close to the LAN Room as possible.

5.3.2.5.3 Clear the section of any insulating material (e.g. concrete, rust, paint, etc.).

5.3.2.5.4 A 5’ length of 4/0 AWG Green insulated wire shall be high pressure crimped to a Thomas & Betts (Part# IBG20-40) I-Beam Ground Clamp’s lug. The Contractor shall attach the clamp and lug to building steel, ensuring that it is firmly attached and cannot be moved - see Figure 5.3.1.

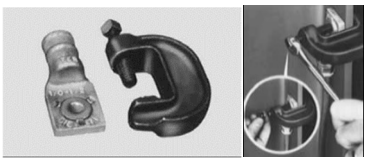

Figure 5.3.1

5.3.2.6 All deviations from the previously specified methodologies must be approved by the CISD PM, in writing, prior to proceeding. Failure to do so may require that the Contractor redo the work at the Contractors cost.

5.3.2.7 A bond resistance test shall be performed on the GrC using an AEMC Model 3731 Ground Resistance Tester or equivalent. Ground resistance shall not exceed 0.2 Ohms.

5.3.3 Single Point Ground Bar (SPGB)

5.3.3.1 An Un-sequenced Exterior Building Single Point Ground Bar (SPGB) (Harger Part# GBITP14412CE) Ground bar with wall mounting brackets, insulators and a 15’ exothermically bonded 2/0 AWG Stranded tail - see Figure 5.3.2 shall be installed in proximity (within 15 feet) to the GrC.

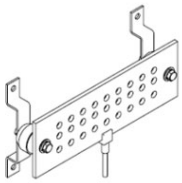

Figure 5.3.2

5.3.3.2 The Single Point Ground Bar shall be equipped with a Plexiglas cover with “SPGB” or “Single Point Ground Bar” stenciled on it - see Figure 5.3.3. The cover shall be stood-off the SPGB using insulated standoffs.

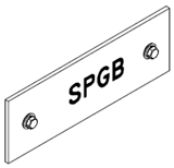

Figure 5.3.3

5.3.3.3 The 2/0 Stranded Copper CadWelded Tail shall be no longer than 15 feet.

5.3.3.4 The un-insulated stranded tail shall be electrically isolated from all structural metal. This includes concrete walls that may contain metal rebar.

5.3.4 Master Ground Bar (MGB)

5.3.4.1 A wall-mounted Master Ground Bar (MGB) with insulators (Harger Part# GPIB14420MMGB) - Universal 4" x 20" x 1/4" solid copper ground bar with 44 pairs of 7/16" pre-drilled universal lug holes, includes insulated mounting hardware - see Figure 5.3.4, shall be installed in the LAN Room, in a location specified in the Work Scope section of the job specific specification. The MGB shall contain pre-drilled double holes to accommodate two-hole lugs.

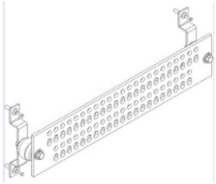

Figure 5.3.4

5.3.4.2 The MGB shall be equipped with a Plexiglas cover with “MGB” or “Master Ground Bar” stenciled on it - see Figure 5.3.5. The cover shall be stood-off the MGB using insulated standoffs.

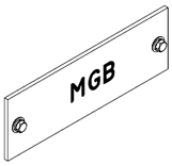

Figure 5.3.5

5.3.4.3 The MGB shall be installed below the SPGB if the GrC comes from above. The MGB shall be installed above the SPGB if the GrC comes from below.

5.3.4.4 The MGB hole patterns are organized in a “PANI” layout as shown in Figure 5.3.6

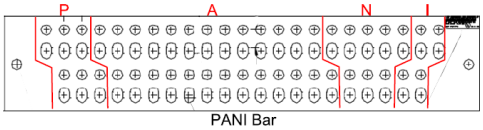

PANI Bar
Configuration
Layout

Figure 5.3.6

5.3.4.5 Each section on the PANI Bar may be expanded or contracted as needed, however the order cannot change. Lines shall be durably marked on the MGB in Red, delineating each PANI section (as show in the figure above).

5.3.4.6 The following ruleset shall be applied in determining the proper location on the PANI bar to which equipment or systems shall be connected - see Figure 5.3.13.

5.3.4.6.1 If the equipment or system can produce surge currents, carry surge currents, or carry lightning into a communications room, but is not designed to absorb and dissipate current, it shall be connected to the ‘P’ (**P**roducer) section of the MGB.

5.3.4.6.2 If the equipment is designed to absorb and dissipate fault current and lightning, or is inherently an alternate path to such system, it shall be connected to the ‘A’ (**A**bsorber) section of the MGB. The distinction here is that a ground to the MGB for AC-powered equipment, in which the AC Equipment Ground (ACEG) and ground to MGB are bonded together at the equipment through the chassis, is inherently an alternate path to the AC panel-board’s ground conductor. As such, it is classified as an absorber.

5.3.4.6.3 If the equipment is AC powered and the ACEG is isolated from the chassis and ground wire to the MGB, it shall be connected to the ‘N’ (**N**eutral) section of the MGB.

5.3.4.6.4 If the equipment is passive and is not connected to a piece of equipment or system that is connected to the AC panel-board ground, the equipment shall be connected to the ‘N’ section of the MGB.

5.3.4.6.5 If the equipment is passive and is connected to a piece of equipment or system that is connected to the AC panel-board ground and, the equipment shall be connected to the ‘A’ section of the MGB.

5.3.4.6.6 If the device is a ground bar for an intentional and properly designed Isolated Ground Zone (IGZ), it shall be connected to the ‘I’ (**I**solated) section of the MGB.

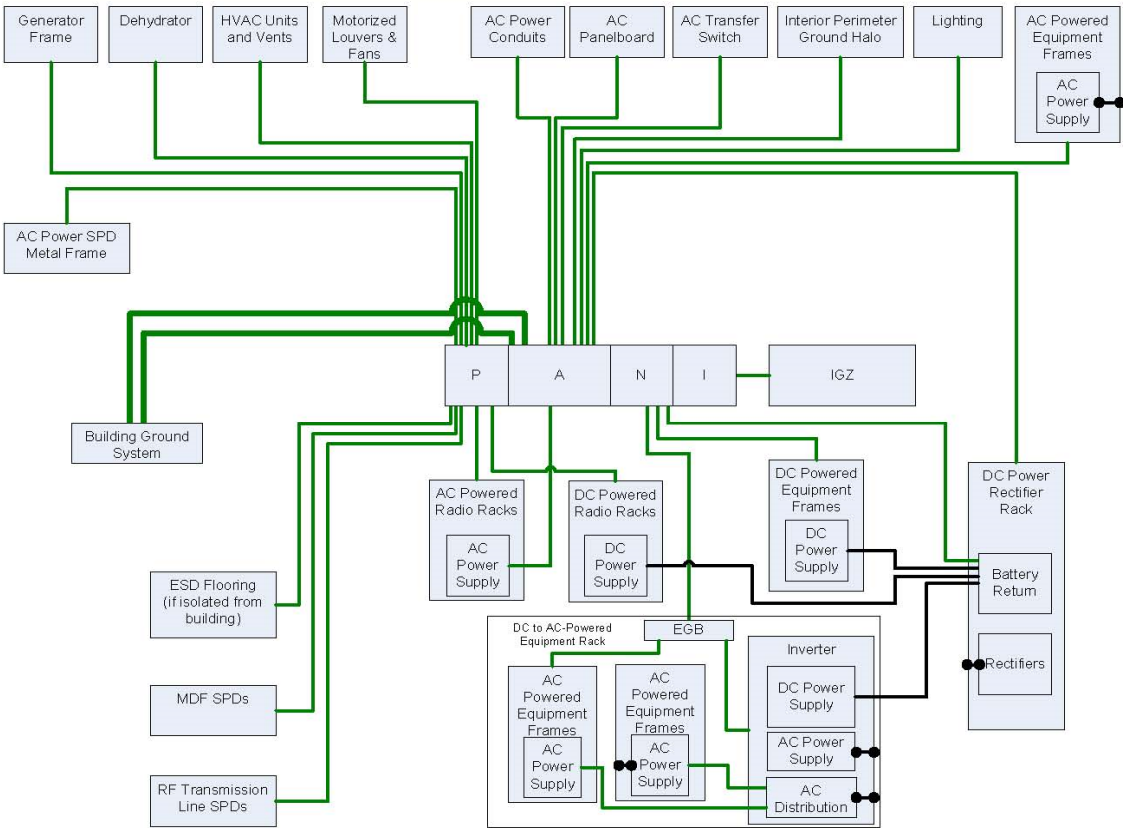

Figure 5.3.13

5.3.5 Equipment Ground Bar (EGB)

5.3.5.1 In large facilities it may be necessary to install supplemental Equipment Ground Bars (EGB) to minimize the length and number of individual ground wires connecting to the MGB. These bars (identical to the MGB, but without the PANI Markings) shall be used to bond racks, cabinets, cable runway and NetShelter ground bus cables.

5.3.5.2 The EGB shall be equipped with a Plexiglas cover with “EGB” or “Equipment Ground Bar” stenciled on it. The cover shall be stood-off the EGB using insulated standoffs.

5.3.6 Floor Ground Bar (FGB)

5.3.6.1 Where an anti-static floor is installed that uses Copper foil as its conducting medium, a Floor Grounding Bar (FGB) (Harger Part# GBIP1836CEFGB) shall be used.

5.3.6.2 The FGB consists of two 3" x 6" x 1/8" solid copper ground bars with a single pair of 7/16" pre-drilled universal lug holes. It includes insulated mounting hardware - see Figure 5.3.7.

Figure 5.3.7

5.3.6.3 The Floor Ground Bar shall be equipped with a Plexiglas cover with “FGB” or “Floor Ground Bar” stenciled on it. The cover shall be stood-off the FGB using insulated standoffs - see Figure 5.3.8.

Figure 5.3.8

5.3.6.4 The FGB shall be installed no more than 3” above the point that floor grounding foil protrudes from the floor.

5.3.7 Horizontal Rack-mount Ground Bar (HRGB)

5.3.7.1 A Horizontal rack-mounted Ground Bar (HRGB) - see Figure 5.3.9, (B-Line Part# SBHB119K), shall be installed in each Cabinet and/or Rack. For 23” racks, use B-Line Part# SBHB123K. These parts comes as a kit with the following material:

- 1 - Horizontal rack ground bar
- 2 - White insulators
- 4 - #12-24 x 5/8” (15.9mm) zinc plated screws & flat washers
- 20 - #12-24 x 1/2” (12.7mm) zinc plated screws
- 2 - Ground labels

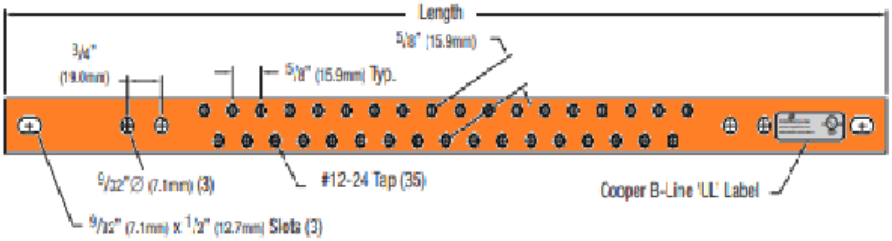

Figure 5.3.9

5.3.7.2 The HRGB shall be isolated from the cabinet and/or rack using (2) Rack Busbar Insulator Blocks supplied as part of the HRGB kit - see Figure 5.3.10 or equivalent. Unless otherwise directed by the CISD Project manager, the HRGB shall be installed at the topmost available RU mounting space.

Figure 5.3.10

5.3.7.3 In configurations where a 4-post rack or 4-rail cabinet is installed, the HRGB shall be installed on the rear set of posts or rails.

5.3.7.4 Rack and cabinet rail connections shall be installed in a manner that will minimize the rendering of RU spaces that become unusable. Where possible, bonding shall be done to built-in grounding studs.

5.3.7.5 All connections to the HRGB shall be installed in a manner that ensures that bends do not violate bend radius and bend angle limitations - see Figure 5.3.11. Two-hole lug connections to the Busbar shall face the direction from which the wire is routed to the Busbar.

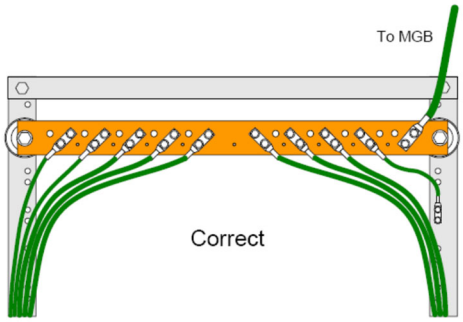

Figure 5.3.11

5.3.8 Bonding to Bus Bars

5.3.8.1 The SPGB shall be bonded to the LAN Room's 4/0 AWG ground wire GrC.

5.3.8.2 The stranded tail of the SPGB shall be attached to the attached to the GrC using a high pressure 4/0-2/0 "C" clamp - see Figure 5.3.12.

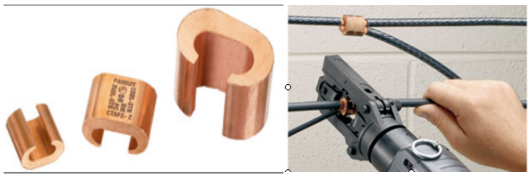

Figure 5.3.12

5.3.8.3 An MGB shall be bonded to the SPGB using a pair of 2/0 AWG green insulated stranded copper wire with double-hole lugs high pressure crimped on at each end. One lug of each cable shall be bolted to the first set of adjacent pairs of holes in the "A" section of the "PANI" layout closest to the "P" section. The other end shall be connected to an available pair of holes closest to the center of the SPGB.

5.3.8.4 Bonding cables are connected to the MGB using a specific set of rules (as described in the MGB section). When it is unknown where to ground a piece of equipment or system, the installer shall contact the CISD Project manager for the proper placement.

5.3.8.5 Unless otherwise noted, all CISD installed equipment and infrastructure shall be considered absorber type equipment and shall be bonded to the "A" section.

5.3.8.6 An EGB shall be bonded to the MGB using a #2 AWG green insulated stranded copper wire with high pressure crimped on double-hole lugs at each end. One lug of the cable shall be bolted to a pair of holes in the "A"

section of the “PANI” layout on the MGB and the other end shall be connected to a pair of holes closest to the left side of the EGB.

5.3.8.7 An HRGB shall be bonded to the “A” section of the MGB using a #6 AWG green insulated stranded cable a two-hole (5/8” OC Spacing), long barrel lug (Harger Part# GECLB62A) - see Figure 5.3.13 high pressure crimped to each end.

Figure 5.3.13

5.3.8.8 A #6 AWG Ground Strap kit (Chatsworth Part# 40164-001) - see Figure 5.3.14 or equivalent, shall be used to create a bonding connection between racks and/or cabinets and the rack mounted Bus bar.

Figure 5.3.14

5.3.8.9 The bonding strap shall be connected to the rail at the highest RU spacing below the Busbar that does not cause a sharp bend in the strap. The other end shall be bolted to the holes on the HRGB closest to the ground bonding cable.

5.3.8.10 Cable Runway Segments connected with butt splices shall be bonded using a #6 AWG Bonding Strap kit.

5.3.8.11 The bonding cable running between the various Bus bars shall be electrically isolated from all runways and conductive structures.

5.3.8.12 The bonding cable shall be routed along runways using non-conductive hangers such as the Panduit J-Pro hangers. Use of nylon ties or hook and loop straps to lash the cable to runways are not acceptable.

5.3.8.13 An anti-static tile floor that uses copper foil as the bonding medium shall be bonded to the floor’s copper foil by folding the foil three times which shall then be sandwiched between the two Copper plates - see Figure 5.3.15.

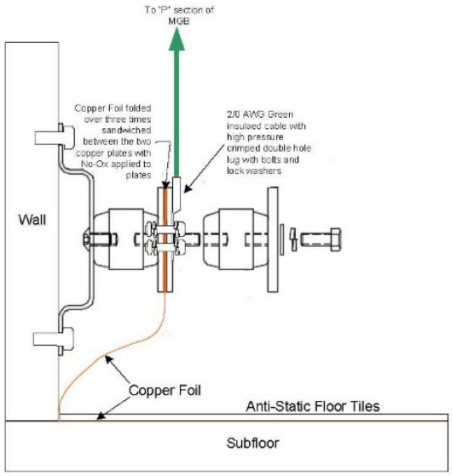

Figure 5.3.15

5.3.8.14 The FGB shall be bonded to the MGB using a 2/0 AWG green insulated stranded copper wire with double-hole lugs high pressure crimped to each end. One lug shall be bolted to the “P” section of the MGB. The other lug shall be bolted with lock washers, through the FGB’s Copper plates and foil.

5.3.8.15 A conductive anti-static rubberized tile floor shall be bonded to the MGB using a 2/0 AWG green insulated stranded copper wire with double-hole lugs high pressure crimped to each end. One lug shall be bolted to the “P” section of the MGB. The other lug shall be bolted to the tile using 1/4-20 T Nuts - see Figure 5.3.16 which shall be attached to the back of the tile.

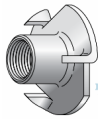

Figure 5.3.16

5.3.8.16 The cable connection to the floor shall be parallel and alongside the wall such that it does not cause a tripping hazard.

5.3.8.17 Raised floors shall be bonded and grounded as follows:

Install GPQC Access Floor Grounding clamps sized for the installed pedestal (Panduit Part # GPQCXX-1/0 - where XX represents type and size of pedestal), 2”-4” below top of pedestal and at 4’-6’ intervals - See Figure 5.3.16A

Figure 5.3.16A

5.3.8.17.1 Install bare #6AWG Copper Stranded cable in a continuous loop between as many GPQC’s as possible. - See Figure 5.3.16B – Floor Grounding Example

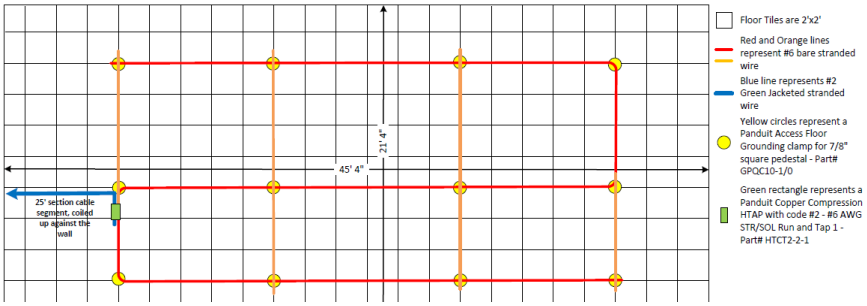

Figure 5.3.16B

5.3.8.17.2 Install segments of bare #6AWG Copper Stranded cable between any adjacent GPQC’s that were missed by the main loop.

5.3.8.17.3 Using a CTAP clamp, crimp a segment of #2AWG Green Jacketed Stranded copper cable long enough to reach the rooms' MGB, to the bare #6AWG Copper Stranded cable.

5.3.8.17.4 Attach the loose end of the #2AWG cable to the "P" section of the MGB.

5.3.9 Bonding Cables and Lugs

5.3.9.1 Bonding cables with high pressure crimped two-hole lugs shall be used with stainless steel bolts, lock washers & nuts when attaching Bus bars and other bonding points, to each other - see Figure 5.3.18.

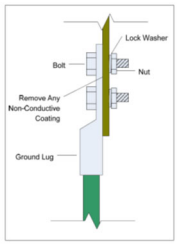

Figure 5.3.18

5.3.9.2 The table below - see Table 5.3.1, lists the wire gauge to be used for the bonding cable between the MGB and other Bus bars. Cable length shall not exceed the maximum length for a given wire gauge.

Conductor Size	Maximum Cable Length
#6 AWG	20 ft.
#2 AWG	33 ft.
2/0 AWG	66 ft.
4/0 AWG	>66 ft.

Table 5.3.1

5.3.9.3 Bonding cable exceeding the maximum length permitted for a particular wire gauge shall be sized to the appropriate gauge size.

5.3.9.4 The bonding cable shall be either green or green-coded black insulated stranded cable.

5.3.9.5 The bonding cable shall have each end terminated with a double hole, Irreversible high pressure crimped lug.

5.3.9.6 The following table - see Table 5.3.2, lists the lug to be used with a specific wire gauge when terminating the cable.

Conductor Size	Harger Part# (or equivalent)
#6 AWG	GECLB62C
#2 AWG	GECLB22C
2/0 AWG	GECLB2/02C
4/0 AWG	GECLB4/02C

Table 5.3.2

5.3.9.7 The metal surface that a bonding conductor will be bonded to shall be cleared of any foreign material and/or oxidation and shall be burnished to allow for good conductivity.

5.3.9.8 An approved antioxidant joint compound (Harger Part# HAAJC8) shall be applied between any bonding conductor and the burnished metal surface.

5.3.9.9 All bonding lugs shall be attached with Stainless Steel hardware and shall include a lock washer appropriate for the application.

5.3.9.10 All bonding cables (other than bonding straps) shall have identification tags (Panduit BM1M or equivalent) - see Figure 5.3.19, applied within 3”-5” of the lug.

5.3.9.11 At each end of the cable, the tag shall clearly identify, with permanent marker or printed label, the far endpoint of the cable. Each tag should contain a unique numeric identifier as well as the location of the other end.

Ex: at the MGB Bus bar end -- **#6 – Cab 4**
at the Cabinet end -- **#6 – MGB**

Figure 5.3.19

5.3.9.12 Bonding cables shall be routed in such a manner that results in the shortest cable length.

5.3.9.13 Bonding cables should always curve smoothly and never make sharp bends that exceed a 90 degree bend or exceed a minimum bend radius of 8 inches - see Figure 5.3.20.

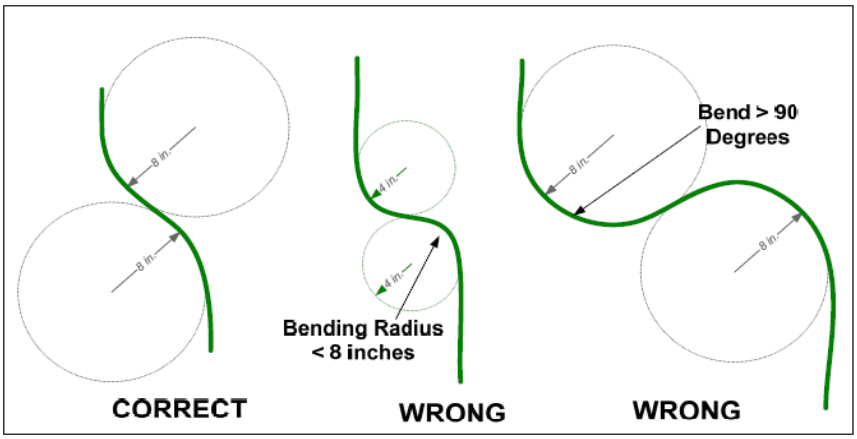

Figure 5.3.20

5.3.10 Equipment Cabinet Bonding Methodology

5.3.10.1 A #12 AWG green insulated stranded cable high pressure crimped to single-hole lugs at each end shall be used to bond all ground studs within a cabinet.

5.3.10.2 An HRGB shall be installed in the rear set of rails at the top RU position

5.3.10.3 The cabinet frame, power troughs & data partitions on NetShelter cabinets, shall be bonded as follows:

5.3.10.3.1 Two #2 AWG green insulated stranded copper ground buses (Cabinet and Data) shall be installed above the cabinet. These two Ground

Buss's shall be joined with a High-pressure C-Clamp just past the row of cabinets & before reaching the MGB or EGB.

5.3.10.3.2 The #2 AWG bonding cable shall be connected to an EGB or the "A" section of an MGB.

5.3.10.3.3 The cabinet and power trough (if installed) shall be bonded to the Cabinet Buss. The HRGB and data partition (if installed) shall be bonded to the Data Buss.

5.3.10.3.4 Bonds to the Ground Buss's shall use a short #6 AWG green insulated stranded copper bonding wire.

5.3.10.3.5 At one end of the bonding wire a one- or two-hole high pressure crimped lug (depending on the connection point) shall be mechanically connected to the threaded copper post or threaded bolt hole of the cabinet, trough, partition and HRGB - see Figure 5.3.21.

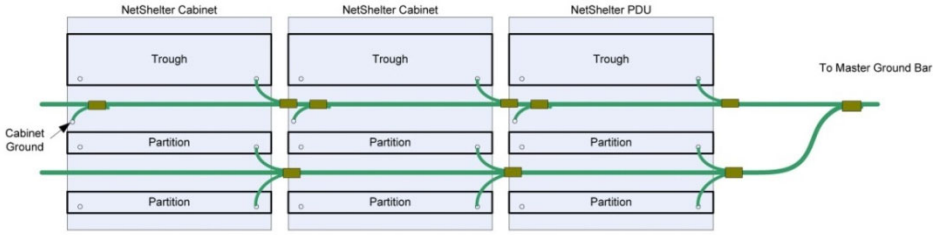

Figure 5.3.21

5.3.10.3.6 At the other end of the bonding cable an irreversible crimp connection shall be made to the Ground Buss using a Harger (Part# CT2248LD) or equivalent Light-duty C-Type Compression Tap - see Figure 5.3.22.

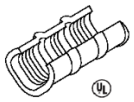

Figure 5.3.22

5.3.11 Equipment Isolation Methodology

5.3.11.1 Racks that will be bolted to the floor shall utilize a Rack isolation kit (CPI Part# 10605-019 for 19" Rack or 10605-023 for 23" Rack), that is placed under the rack - see Figure 5.3.23.

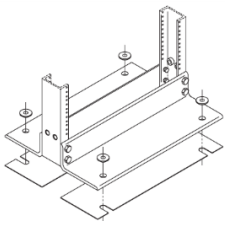

Figure 5.3.23

5.3.11.2 Cable Runway (ladder) shall be electrically isolated from racks or cabinets by using Runway Insulator bar kit (Chatsworth Part# 10842-001) - see Figure 5.3.24.

Figure 5.3.24

5.3.11.3 Cable Runway (ladder) shall be electrically isolated from walls, ceilings and any supporting structure using Runway Insulator bar kit (Chatsworth Part# 10842-001) or Stand-off Insulators (Chatsworth Part# 13622-000 or equivalent) - see Figure 5.3.25.

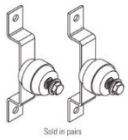

Figure 5.3.25

5.3.11.4 The following Harger Parts or equivalent - see Table 5.3.3, shall be used as applicable, when isolators are required:

Standoff Insulators - Red

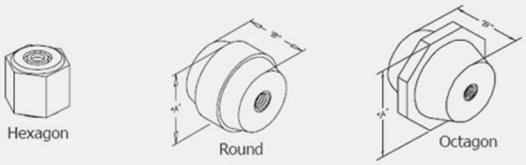

Manufactured from glass reinforced thermoset polyester.

	Part No.	"A"	"B"	Shape	Thread Size	Voltage Rating	Tensile Strength (lbs.)	Box Qty.	Approx. Box Wt. (lbs.)
Add to BOM ♦	1100A1	1"	1"	Hex	1/4 - 20 x 1/4 AL	600	1200	25	1-1/2
Add to BOM ♦	4150S2	2"	1-1/2"	Oct	1/4 - 20 x 1/2 STL	1500	3000 - 4500	20	4-1/2
Add to BOM ♦	R4150S3	1-3/4"	1-1/2"	Round	5/16 - 18 x 1/2 STL	1500	2500 - 2700	20	5-1/2
Add to BOM ♦	R4150A4	1-3/4"	1-7/8"	Round	3/8 - 16 x 3/8 AL	2000	2500 - 2700	20	5-1/2
Add to BOM ♦	R4200S5	1-3/4"	2"	Round	3/8 - 16 x 5/8 STL	2500	2500 - 2700	20	6-3/4
Add to BOM ♦	4200S6	2"	2"	Oct	1/2 - 13 x 5/8 STL	2500	3000 - 4500	20	8
Add to BOM ♦	5250A5	2-1/2"	2-1/2"	Oct	3/8 - 16 x 5/8 AL	3200	5000 - 5700	10	4-1/2
Add to BOM ♦	5263A8	2-1/2"	2-5/8"	Oct	5/8 - 11 x 3/4 AL	3400	5000 - 5700	10	4-3/4

♦ BOM = Bill of Materials

Table 5.3.3

5.3.12 Single Small Cabinet Installations

5.3.12.1 Where an Installation consists of a single small cabinet, the Grounding and Bonding methodology changes as follows:

5.3.12.1.1 Con Edison or their designated Contractor shall identify a main steel column or a steel beam that has electrical continuity with a main steel column.

5.3.12.1.2 Identify a 3” by 3” section of building steel that can be made easily accessible and clearly visible, as close to the cabinet as possible.

5.3.12.1.3 Clear the section of any insulating material (e.g. concrete, rust, paint, etc).

5.3.12.1.4 A 5’ length of 4/0 AWG Green insulated wire shall be high pressure crimped to a Thomas & Betts (Part# IBG20-40) I-Beam Ground Clamp lug. The Contractor shall attach the clamp and lug to building steel, ensuring that it is firmly attached and cannot be moved. This cable will serve as the GrC for this cabinet.

5.3.12.1.5 A bond resistance test shall be performed on the GrC using an AEMC Model 3731 Ground Resistance Tester or equivalent. Ground resistance shall not exceed 0.2 Ohms.

5.3.12.1.6 A Horizontal Rack-mounted Ground Bar (HRGB) supplied by Con Edison, shall be installed in the cabinet.

5.3.12.1.7 The HRGB shall be installed at the topmost available RU mounting space.

5.3.12.1.8 The HRGB shall be isolated from the cabinet using (2) Rack Bus bar Insulator Blocks (Chatsworth Part# 40157-001) or equivalent.

5.3.12.1.9 The HRGB shall be bonded to the GrC using a #6 AWG Green insulated wire with high pressure crimped lug on one end. The other end shall remain bare and shall be bonded to the GrC using a high pressure crimped 4/0-#6 “C” clamp (Panduit Part# CTAP4/0-2-X).

5.3.12.1.10 All connections to the HRGB Bus bar shall be installed in a manner that ensures that there are no sharp bends. Two-hole lug connections to the Bus bar shall face the direction from which the wire is routed to the Bus bar.

5.3.12.1.11 A #6 AWG Ground Strap kit (Chatsworth Part# 40164-001) or equivalent shall be used to create a bonding connection between racks and/or cabinets and the rack mounted Bus bar.

5.3.12.2 Should a second cabinet be added in the future, then the following modifications shall be installed:

5.3.12.2.1 A SPGB shall be installed in close proximity to the GrC.

5.3.12.2.2 The bare 2/0 AWG Cad welded tail of the SPGB shall be bonded to the GrC using a high pressure crimped 4/0-2/0 “C” clamp (Panduit Part# CTAP4/0-2/0-X).

5.3.12.2.3 The #6 bonding cable from the HRGB shall be cut free from the GrC and a lug shall be high pressure crimped to the cable.

5.3.12.2.4 The lug shall be bolted to an available pair of holes closest to the center of the SPGB.

5.3.12.3 The second and/or any subsequent cabinet shall be grounded and bonded in the same manner as the first cabinet.

5.3.13 Outdoor Rated CatX Grounding at a POE

5.3.13.1 When an outdoor rated Cat/5e cable enters a facility, it needs to be grounded to isolate it and eliminate any induced current that may be present in the copper conductors. The follow methodology shall be used to affect this isolation and grounding.

5.3.13.2 For cable enclosed in above ground conduit or exposed to the environment:

5.3.13.2.1 An Altelicon Lightning Protector (Part# AL-CAT5EHPW) shall be installed at each end of the cable as close to the point of entry (POE) as practical - see Figure 5.3.26.

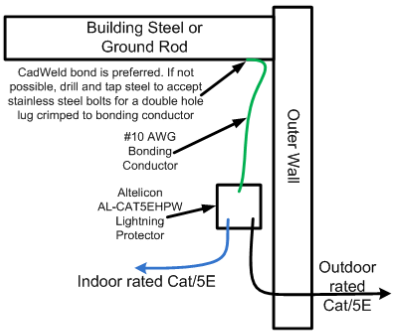

Typical Isolation & Grounding Setup for Cat/5e Cable Running Above Ground in Conduit or Exposed

Figure 5.3.26

5.3.13.2.2 The Altelicon unit should be mounted in a location that permits simple access, should the unit need to be serviced.

5.3.13.2.3 The Outdoor rated cable, indoor rated cable and a #10 AWG Green insulated solid Copper cable shall be connected to the Altelicon as depicted in Figure 5.3.27.

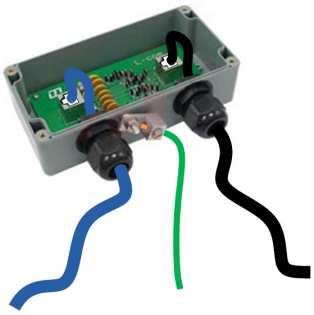

Figure 5.3.27

5.3.13.2.4 One end of the #10 AWG bonding conductor should be attached to the Altelicon's grounding lug and screwed down tightly so that it doesn't come loose.

5.3.13.2.5 The second end of the #10 AWG bonding conductor should be bonded to building steel or a properly installed ground rod.

5.3.13.2.6 The preferred method to bond to building steel or ground rod is by using a CadWeld process.

5.3.13.2.7 If it is not possible or practical to do the CadWeld, a two-hole lug should be attached to the bonding conductor using a high-pressure irreversible crimp.

5.3.13.2.8 A small section of steel beam flange should be cleared of concrete and/or rust and burnished to provide good conductivity.

5.3.13.2.9 When both sides of a beam flange are accessible, two holes should be drilled through the flange. An approved antioxidant joint compound shall be applied between the steel and lug. Two stainless steel bolts with lock washers and nuts shall be used to bond the lug to the steel.

5.3.13.2.10 When only one side of a beam flange is accessible, two holes should be drilled through the flange and tapped. An approved antioxidant joint compound shall be applied between the steel and lug. Three eights inch stainless steel bolts with lock washers screwed into the tapped holes shall be used to bond the lug to the steel. To prevent the screws from loosening over time, LOCTITE® 242™ medium strength thread lock shall be applied to the threads.

5.3.13.2.11 When the grounding will utilize a ground rod, a light duty ground rod clamp (Harger Part# 300LD) - see Figure 5.3.28, shall be used to bond the conductor to a properly installed ½" ground rod.

Figure 5.3.28

5.3.13.3 For cable enclosed in buried conduit:

5.3.13.3.1 Where a single device is being protected, an APC ProtectNet standalone surge protector (Part# PNET1GB) - see Figure 5.3.29, shall be installed at each end of the cable as close to the equipment that is being protected as practical.

Figure 5.3.29

5.3.13.3.2 The Green ground wire exiting the surge protector shall be attached to a properly installed ground point.

5.3.13.3.3 When multiple cables will be run between two locations, an APC 4 position chassis (Part# PRM4) or a 24-position chassis (Part# PRM24), shall be installed at the point of cable termination, typically on a rack or within a cabinet - see Figure 5.3.30.

Figure 5.3.30

5.3.13.3.4 A #10 AWG stranded Green insulated cable with a crimped on single-hole lug shall be attached to the chassis ground stud on the rear left of the chassis - see Figure 5.3.31.

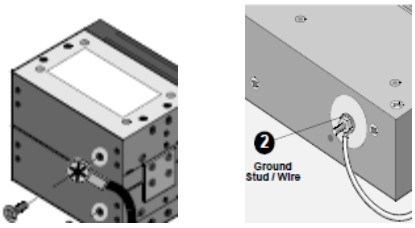

Figure 5.3.31

5.3.13.3.5 The other end of the cable shall be connected to the HRGB supporting the rack.

5.3.13.3.6 An APC Surge Module for Cat5e or CAT6 (Part# PNETR6) - see Figure 5.3.32, shall be installed in the chassis for each outdoor Cat5e cable that is to be protected.

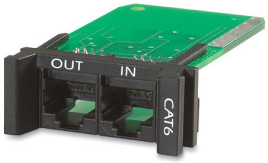

Figure 5.3.32

5.3.13.3.7 The outdoor cable shall be plugged into the “IN” port and the equipment being protected shall be plugged into the “OUT” port of the surge protection module.

6.0 Change Log

Date	Author	Rev #	Comments
6/10/22	Michael Ribarich	11	Changed references from LIS to CISD. Also changed references from IR to IT. Format changes.

Conduit Installation

1. Conduit shall be installed to run in the most direct route possible, preferably with no more than two 90-degree bends between pull points or pull boxes.
2. 90-degree condulets shall not be utilized in conduit runs.
3. Conduit runs shall contain no continuous sections longer than 100 ft.
4. All bends must be long sweeping bends.
5. For conduit with an internal diameter of 2 inches or less, the bend radius must be at least six times the internal conduit diameter.
6. For conduit with an internal diameter greater than 2 inches, the bend radius must be at least ten times the internal conduit diameter.
7. Conduit bends shall be smooth and even and shall not contain kinks or other discontinuities that may have detrimental effects on pulling tension or cable integrity during or after installation.
8. If a conduit run requires more than two 90-degree bends, a pull box shall be provided between sections with two bends.
9. If a conduit run requires a reverse bend (between 100-degrees and 180-degrees), a pull box must be inserted at each end having an angle from 100-degrees to 180-degrees.
10. All conduit ends shall be reamed and fit with an insulated bushing to eliminate sharp edges that can damage cables during installation and service.
11. Conduits that protrude through the structural floor shall be terminated as close to the wall as possible to allow for proper vertical cable routing.
12. Conduits that protrude through the structural floor shall be terminated 1 to 3 inches above the surface.
13. All conduits shall be equipped with a plastic or nylon drag line with a minimal test rating of 200lb.
14. Pull boxes shall be installed in easily accessible locations.
15. Length of pull box shall be a minimum of eight times the diameter of the largest conduit

SECTION 27 13 00 – LAN INFRASTRUCTURE

1.1 SPECIFICATION

A. The following specification, prepared by Con Edison, for LAN Infrastructure with respect to the site location is included with this document:

SPECIFICATION NO. IT-CISD-LAN-322-01

Consolidated Edison Company of New York
4 Irving Place, New York, New York 10003

Information Technology
Communications Infrastructure & Site Design

DESCRIPTION

LAN Infrastructure at
R900 – Spring Valley Operations Center
Building Expansion

LOCATION
390 Route 59 West
Spring Valley, NY 10977

Prepared By: Ronald Devito Date: 04/07/2025
Systems Specialist

Reviewed By: Paul Nardelli Date: 04/09/2025
Systems Specialist

Approved By: Michael J. Ribarich Date: 04/09/2025
Systems Manager

END OF SECTION 27 13 00

SPECIFICATION NO. IT-CISD-LAN-322-01

Consolidated Edison Company of New York
4 Irving Place, New York, New York 10003

Information Technology
Communications Infrastructure & Site Design

DESCRIPTION

LAN Infrastructure at

R900 – Spring Valley Operations Center

Building Expansion

LOCATION

390 Route 59 West
Spring Valley, NY 10977

Prepared By: Ronald Devito Date: 04/07/2025
Systems Specialist

Reviewed By: Paul Nardelli Date: 04/09/2025
Systems Specialist

Approved By: Michael J. Ribarich Date: 04/09/2025
Systems Manager

Table of Contents

1.0 Project overview 3
2.0 Project Requirements 3
2.1 General 3
2.2 Installation 3
2.3 Deliverables 4
3.0 Scope of Work 4
3.1 Removal of Existing Infrastructure 4
3.2 IT Rooms 5
3.3 Copper Structured Cabling 5
3.4 Fiber Structured Cabling 7
3.5 Grounding, Bonding, and Isolation 8
3.6 Racking and Stacking 9
3.7 Work Area Equipment 9
3.8 Femtocell 10
4.0 Reference Standards 10
4.1 IT-CISD-CPR-STD-Cat-6-and6A Copper Cable Standard 10
4.2 IT-CISD-FIB-STD - Fiber Cable Standard 10
4.3 IT-CISD-TGB-STD – Grounding and Bonding Standard 10
4.4 IT-CISD-RRL-GDL Cable Runway and Rack Layout Guideline 10
4.5 IT-CISD Conduit Installation Standard Requirements 10
5.0 Attachments 11
5.1 Attachment 01 - CAT-6 6A Cable Pathways and Drop Locations 11
5.2 Attachment 02 – Access Point Deployment 11
5.3 Attachment 03 - Comm and LAN Room Layouts 11
5.4 Attachment 04 - Comm Room and LAN Room Rack Elevations 11
5.5 Attachment 05 - Fiber Ties and Backbone Connections 11
5.6 Attachment 06 - Fiber Tray Layout and Labeling 11
5.7 Attachment 07 - Master ABF Cable Schedule 11
5.8 Attachment 08 - ABF Riser Documentation 11
5.9 Attachment 09 - Femtocell Documentation 11

1.0 PROJECT OVERVIEW

Con Edison/Orange and Rockland Utilities (CECONY/ORU) is adding a three-story 48,000-square foot addition to Spring Valley Operations Center. A LAN infrastructure is required to support this effort. This document details the components and services that the cable installation contractor (Contractor) must supply and perform.

2.0 PROJECT REQUIREMENTS

2.1 General

2.1.1 All work shall be performed according to the requirements in this specification, including all drawings, reference standard specifications, and attachments.

2.1.2 The Contractor shall, before bidding, visit and examine the worksite and the latest construction drawings to become familiar with the site arrangement and existing conditions and difficulties, which may affect the execution of the work scope covered by this specification. Non-familiarity of existing site conditions and proposed construction will not be an acceptable basis for any later claims of additional costs.

2.1.3 Drawings within this specification are for reference only. The Contractor shall perform inspections as required to verify the accuracy of dimensions and details on all drawings and clarify any requirements included in this specification before submitting a bid proposal. There shall be no claims for extra costs incurred by the Contractor due to the underestimating of material and/or labor required because of field conditions, which could have been identified through inspection and measurements.

2.1.4 Any claim submitted by the Contractor that is related to difficulties encountered during construction because of the Contractor's failure to verify site conditions and clarify specification requirements will not be honored by Con Edison.

2.2 Installation

2.2.1 Con Edison qualified Contractors:

1) Powercom – Contact Hal Kern 914-632-2600, halkern@powercomsystems.com.
2) Telenetics – Contact Bob Vogel 516-779-2640, telenet@rcn.com.
3) Coranet – Contact Paul Giddens, 212-635-2770, PGiddens@coranet.com

2.2.2 The Category 6 cable installation described in this document shall require component and cable manufacturer certification issued by Siemon Company as their 25-year System 6^{SM} certification.

2.2.3 The Category 6A cable installation described in this document shall require component and cable manufacturer certification issued by Siemon Company as their 25-year UltraMAX™6A certification.

2.2.4 All copper cable described in this document shall be installed in accordance with the latest revision of the Con Edison IT-CISD-CPR-STD-Cat-6-and6A Copper Cable Standard and attachments within this document.

2.2.5 All The air blown fiber installation described in this document shall be installed and tested such that it meets all requirements for the Sumitomo extended warranty.

2.2.6 All fiber cable described in this document shall be installed in accordance with the latest revision of the Con Edison IT-CISD-FIB-STD - Fiber Cable Standard and attachments within this document.

2.2.7 All telecommunications grounding and bonding described in this in this document shall be installed in accordance with the latest revision of the Con Edison IT-CISD-TGB-STD – Standard Specification for Installation of LAN Telecommunications Grounding and Bonding and attachments within this document.

2.2.8 All cable runways and racks described in this document shall be installed in accordance with the latest revision of the Con Edison IT-CISD-RRL-GDL-03 Cable Runway and Rack Layout Design and Construction Guideline and attachments within this document.

2.2.9 All conduit cable pathways described in this document shall be installed in accordance with the latest revision of the Con Edison IT-CISD Conduit Installation Standard Requirements and attachments within this document. STI EZ—Path 44 Series pathways shall be installed where conduit is not specified.

2.3 Deliverables

2.3.1 Proof of submittal for Siemon Company certification/warranty documentation in electronic format.

2.3.2 Proof of submittal for Sumitomo certification/warranty documentation in electronic format.

2.3.3 As-built drawings in native electronic format for all attachments in Section 5 if final installation differs from this specification.

2.3.4 Pictures of ground resistance tester displays for all for all bonding conductor and ground bar Ohm measurements.

3.0 SCOPE OF WORK

The Contractor shall provide all equipment, labor, supervision, and material to do the work described in this section. Unless stated differently in this section, the contractor shall follow installation practices within the reference standards stated in Section 4 and attachments in Section 5.

3.1 Removal of Existing Infrastructure

3.1.1 Not applicable.

3.2 IT Rooms

3.2.1 The Contractor shall supply and install three two-post (3) 19” racks and one (1) four-post 19” rack in the 1st floor Comm Room.

3.2.2 The Contractor shall coordinate the installation of a Mid Atlantic 44U Wide Rack Enclosure, model# DRK19-44-36LRD supplied and installed by the Security contractor in the 1st Floor Comm room.

3.2.3 The Contractor shall coordinate the installation of a Moreng Telecom Products, Issue P Network Power Bay 7 Foot 23 Inch Wide 2 Post Blue Rack – Part # R084231R-3 supplied and installed by the CCTN contractor in the 1st Floor Comm room.

3.2.4 The Contractor shall supply and install one (1) two-post and one (1) four-post 19” rack in the 2nd and 3rd floor LAN Rooms.

3.2.5 The Contractor shall secure racks to the floor using ½” anchors, washers, lock washers and nuts. Excess threading that thread past the nut shall be cut flush with the nut after nut has been tightened to manufacturer’s specification.

3.2.6 The Contractor shall supply and install 10” wide, 7’ tall, double sided black vertical wire-managers CPI parts 30096-703.

3.2.7 The Contractor shall supply and install a cable runway system in the Comm Room and each LAN Room. The cable runway shall be installed at two (2) different heights.

3.2.8 The 12” wide power runway shall be secured to the wall perpendicular to each rack and cabinet at a height of 7’ 6”. The power runway shall be attached to the top of each rack/cabinet using a rack-to-runway mounting plate with bracket and to the wall behind the rack.

3.2.9 The combination of 12” and 24” data runway shall run parallel with the racks at the height of 8’. The data runway will be secured to the ceiling and the walls.

3.2.10 Vertical sections of 24” wide data runways are required for floor and lower wall penetrations.

3.2.11 The Contractor shall supply and install radius drops from each direction above each rack vertical cable manager and for each transition between horizontal and vertical runways.

3.2.12 The Contractor shall use CPI Adjustable Cable Runway system using part# 14300-724 and extra stringers if required to align radius drops with wire managers, part# 14302-724.

3.3 Copper Structured Cabling

3.3.1 The Contractor shall install one hundred and twenty-four (124) dual CAT-6 and thirteen (13) dual 6A drops from the 1st floor Comm room to the 1st floor work area. The Contractor shall install sixteen (16) dual CAT-6

drops for card swipe readers and one (1) dual CAT-6 drop for a duress button. The card swipe and duress button drops shall be terminated to the Corporate Security Patch Panel. Corporate Security's Contractor shall be responsible for running, terminating and testing CAT-6 drops for security cameras.

3.3.2 The Contractor shall install one hundred and forty-six (146) dual CAT-6 and thirteen (13) dual CAT-6A drops from the 2nd floor LAN room to the 2nd floor work area.

3.3.3 The Contractor shall install nine (9) dual CAT-6 drops for card swipe readers. The card swipe drops shall be terminated to the Corporate Security Patch Panel. Corporate Security's Contractor shall be responsible for running, terminating and testing CAT-6 drops for security cameras.

3.3.4 The Contractor shall install one hundred (100) dual CAT-6 and eleven (11) dual CAT-6A drops from the 3rd floor LAN room to the 2nd floor work area.

3.3.5 The Contractor shall install sixteen (16) dual CAT-6 drops for card swipe readers and seven (7) dual CAT-6 drop for duress buttons. The card swipe and duress button drops shall be terminated to the Corporate Security Patch Panel. Corporate Security's Contractor shall be responsible for running, terminating and testing CAT-6 drops for security cameras.

3.3.6 All copper cabling trunks shall be supported by SnakeTray™ affixed to threaded rods suspended from the ceiling deck. Small branch runs shall be supported by Panduit 4" J-Pro hooks affixed to threaded rods suspended from the ceiling deck.

3.3.7 The Contractor shall install two (2) CAT-6 dual drops between the floor box and behind each display in each conference room.

3.3.8 The Contractor shall use the following type and brand of CAT-6 cabling:

1) Siemon 9C6P4-E3-02-RXACat6 System 6 Plenum Cable - White
2) Siemon 9C6P4-E3-06-RXACat6 System 6 Plenum Cable – Blue

3.3.9 The Contractor shall provide a distinct color cabling for each "dual drop." The "dual drop" position shall remain constant throughout the project. The cable colors shall be as follows:

1) Cable A – Blue
2) Cable B – White

3.3.10 The Contractor shall supply, label and install one (1) CAT-6 patch cable between each LAN Room patch panel yellow port and a LAN switch port according to a schedule provided by the IT project manager.

3.3.11 The Contractor shall supply, label and install one (1) CAT-6 patch cable between each LAN Room patch panel violet port and a LAN switch port according to a schedule provided by the IT project manager.

3.3.12 The Contractor shall supply, label and install one (1) CAT-6 patch cable between each work area yellow port according to a schedule provided by the IT project manager.

3.3.13 The Contractor shall supply, label and install one (1) CAT-6 patch cable between each work area violet port according to a schedule provided by the IT project manager.

3.4 **Fiber Structured Cabling**

3.4.1 The Contractor shall supply and install two (2) new TDU (Tube Distribution Unit) (DE36IDU) in the 1st floor Comm room.

3.4.2 The Contractor shall supply and install two new TDU (DE20IDU) in the 2nd and 3rd floor LAN rooms.

3.4.3 The Contractor shall install conduits between TDUs per Attachment 03 – Conduit Schedule.

3.4.4 The Contractor shall supply and install one (1) 19-tube (TC19TP2) tube cable between the 1st floor LAN room TDU 01 and the 2nd floor LAN room TDU 03, and between 2nd Floor LAN Room TDU 03 and 3rd Floor LAN Room TDU 05.

3.4.5 The Contractor shall supply and install one (1) 19-tube (TC19TP2) tube cable between the 1st floor LAN room TDU 02 and the 2nd floor LAN room TDU 04, and between 2nd Floor LAN Room TDU 04 and 3rd Floor LAN Room TDU 06.

3.4.6 The Contractor shall supply and install one (1) 19-tube (TC19TP2) tube cable between the 1st floor LAN room TDU 01 and Electric Control Center IDF A. Final Rack/enclosure, and fiber tray position to be determined in the field.

3.4.7 The Contractor shall supply and install one (1) 19-tube (TC19TP2) tube cable between the 1st floor LAN room TDU 02 and Electric Control Center IDF B. Final Rack/enclosure, and fiber tray position to be determined in the field.

3.4.8 The Contractor shall supply and install one (1) 19-tube (TC19TP2) tube cable between the 1st floor LAN room TDU 01 and Spring Valley Data Center Production Row 4. Final Rack/enclosure, and fiber tray position to be determined in the field.

3.4.9 The Contractor shall supply and install one (1) 19-tube (TC19TP2) tube cable between the 1st floor LAN room TDU 02 and Spring Valley Old Data Center. Final Rack/enclosure, and fiber tray position to be determined in the field.

3.4.10 The Contractor shall install a microduct pathway, blow, terminate and test one (1) 24-strand single mode fiber bundle (FB24SX) between the 1st floor LAN room and the 3rd floor LAN rooms, via Fiber Riser 1 (TDUs 01, 03, and 05).

3.4.11 The Contractor shall install a microduct pathway, blow, terminate and test one (1) 24-strand single mode fiber bundle (FB24SX) between the

1st floor LAN room and the 3rd floor LAN rooms, via Fiber Riser 2 (TDUs 02, 04, and 06).

3.4.12 The Contractor shall install a microduct pathway, blow, terminate and test one (1) 24-strand single mode fiber bundle (FB24SX) between the 1st floor LAN room and the 2nd floor LAN rooms, via Fiber Riser 1 (TDUs 01 and 03).

3.4.13 The Contractor shall install a microduct pathway, blow, terminate and test one (1) 24-strand single mode fiber bundle (FB24SX) between the 3rd floor LAN room and the 2nd floor LAN rooms, via Fiber Riser 2 (TDUs 04, and 06).

3.4.14 The Contractor shall install a microduct pathway, blow, terminate and test two (2) 72-strand single mode fiber bundles (FP72PVS) between the 1st Floor Comm Room and the Electric Control Center IDF A, via 1st Floor Comm Room TDU 01. The fiber bundles will terminate directly in Rack B2, Tray 5. The new fiber tray shall be installed in "RU" 20. Note this is an old rack without RU designations.

3.4.15 The Contractor shall install a microduct pathway, blow, terminate and test two (2) 72-strand single mode fiber bundles (FP72PVS) between the 1st Floor Comm Room and the Electric Control Center IDF B, via 1st Floor Comm Room TDU 02. The fiber bundles will terminate directly in Rack B1, Tray 6. The new fiber tray shall be installed in RU 28.

3.4.16 The Contractor shall install a microduct pathway, blow, terminate and test two (2) 72-strand single mode fiber bundles (FP72PVS) between the 1st Floor Comm Room and the Spring Valley Data Center Production Row 4, via 1st Floor Comm Room TDU 01. The fiber bundles will terminate directly in Cabinet 1, Tray 4. The new fiber tray shall be installed in RU 30.

3.4.17 The Contractor shall install a microduct pathway, blow, terminate and test two (2) 72-strand single mode fiber bundles (FP72PVS) between the 1st Floor Comm Room and the Spring Valley Old Data Center, via 1st Floor Comm Room TDU 02. The fiber bundles will terminate directly in Cabinet 5, Tray 4. The new fiber tray shall be installed in RU 22.

3.4.18 The Contractor shall use Sumitomo FutureFlex FOR-144-0-1 Cable Breakout Kits for Ribbon when terminating the 72-strand single mode fiber bundles for the CCTN Routes.

3.4.19 The Contractor shall install Sumitomo FutureFlex FT-9-288XFQX2U fiber trays in the new Comm Room CCTN Racks, RR #0101.02 and RR #0101.03 in RUs 40 and 41.

3.4.20 The contractor shall install Sumitomo FutureFlex FT-9-144XFQX1U fiber trays at the endpoints delineated in 3.4.14 through 3.4.17.

3.5 Grounding, Bonding, and Isolation

3.5.1 The contractor shall start off each cabinet and cabinet/rack row in each LAN rooms 1” from the adjacent wall to ensure isolation from that wall.

3.5.2 The Contractor shall isolate all racks from the floor.

3.5.3 The Contractor shall isolate all cable runways from walls, floors, and any supporting structures.

3.5.4 The Contractor shall coordinate with the General Contractor and IT project manager on the location to install the grounding conductor (GrC) and the single point ground bar (SGB) in the Communications Room and each LAN room.

3.5.5 The Contractor shall supply and install a SGB and bond to the provided GrC in the Communication Room and each LAN room.

3.5.6 The Contractor shall supply and install a master ground bar (MGB) in in the Communication Room and each LAN room and bond to the SGB.

3.5.7 The Contractor shall supply and install a floor ground bar (FGB) in each in the Communication Room and each LAN room of the and bond to the MGB.

3.5.8 The Contractor shall bond the antistatic floor to the FGB in in the Communication Room and each LAN room.

3.5.9 The Contractor shall bond each HRGB to the MGB.

The Contractor shall supply and install non-conductive Panduit J-Pro (or equivalent) J-hooks to route and isolate all bonding conductors and power cords.

3.6 Racking and Stacking

3.6.1 The Contractor shall pick up from the Con Edison CISD group on the 9th floor of 4 Irving Place NY 10003, deliver, and rack mount all Con Edison provided UPSs (Uninterruptible Power Supply) (Uninterruptible Power Supply), External Battery Packs, ATSs (Automatic Transfer Switch) and Netbotz devices.

3.6.2 The Contractor shall pick up from the Con Edison IP Build & Automation (IPB&A) group on the 4th floor of 4 Irving Place, NY 10003, deliver and rack mount all Con Edison provided Cisco switches.

3.6.3 The Contractor shall supply and install wire managers under each installed patch panel and Cisco LAN switch.

3.6.4 The Contractor shall supply and install Siemon blank panels in for all unused rack units except for units 44 and 45.

3.6.5 The Contractor shall label and install Con Edison provided power cords according to a schedule provided by the IT project manager.

3.7 Work Area Equipment

3.7.1 The Contractor shall supply and install an Oberon panel at each wireless access point location.

3.7.2 The Contractor shall pick up from the Con Edison IPB&A group on the 4th floor of 4 Irving Place, NY 10003, deliver and install wireless access points within the Oberon panels for each new wireless access point location.

3.7.3 The Contractor shall label each Oberon panel, access point and associated dual CAT-6 according to a schedule provided by the IT project manager.

3.8 Femtocell

3.8.1 The Contractor shall pick up from the Con Edison CISD group on the 9th floor of 4 Irving Place, NY 10003 and deliver three (3) Femtocells and associated GPS antennae, RF cable and grounding material.

3.8.2 The Contractor shall install one (1) Femtocell in the 1st floor Comm Room. and one (1) in the 2nd and 3rd Floor LAN Rooms.

3.8.3 The Contractor shall install four (4) internal antennae on all three floors.

3.8.4 The Contractor shall install one (1) LMR 400 RF cable from the 1st Floor Comm Room Femtocell to each of the internal antennae on the 1st floor.

3.8.5 The Contractor shall install one (1) LMR 400 RF cable from the 2nd Floor LAN Room Femtocell to each of the internal antennae on the 2nd floor.

3.8.6 The Contractor shall install one (1) LMR 400 RF cable from the 3rd Floor LAN Room Femtocell to each of the internal antennae on the 3rd floor.

3.8.7 The Contractor shall install the three (3) GPS antennae on the East center of the new building roof.

3.8.8 The Contractor shall install one (1) LMR 400 RF cable from the 1st Floor Comm Room Femtocell to one (1) of the GPS antennae.

3.8.9 The Contractor shall install one (1) LMR 400 RF cable from the 2nd Floor LAN Room Femtocell to one (1) of the GPS antennae.

3.8.10 The Contractor shall install one (1) LMR 400 RF cable from the 3rd Floor LAN Room Femtocell to one (1) of the GPS antennae.

3.8.11 The Contractor shall bond each LMR 400 RF cable at each antenna end to building steel.

3.8.12 The Contractor shall patch in each Femtocell to its associated CAT-6 drop, label each Femtocell, associated dual CAT-6 drop, LMR cable, and bonding conductors according to a schedule provided by the IT project manager.

4.0 REFERENCE STANDARDS

4.1 IT-CISD-CPR-STD-Cat-6-and6A Copper Cable Standard

4.2 IT-CISD-FIB-STD - Fiber Cable Standard

4.3 IT-CISD-TGB-STD – Grounding and Bonding Standard

4.4 IT-CISD-RRL-GDL Cable Runway and Rack Layout Guideline

4.5 IT-CISD Conduit Installation Standard Requirements

5.0 ATTACHMENTS

5.1 Attachment 01 - CAT-6 6A Cable Pathways and Drop Locations

5.2 Attachment 02 – Access Point Deployment

5.3 Attachment 03 - Comm and LAN Room Layouts

5.4 Attachment 04 - Comm Room and LAN Room Rack Elevations

5.5 Attachment 05 - Fiber Ties and Backbone Connections

5.6 Attachment 06 - Fiber Tray Layout and Labeling

5.7 Attachment 07 - Master ABF Cable Schedule

5.8 Attachment 08 - ABF Riser Documentation

5.9 Attachment 09 - Femtocell Documentation

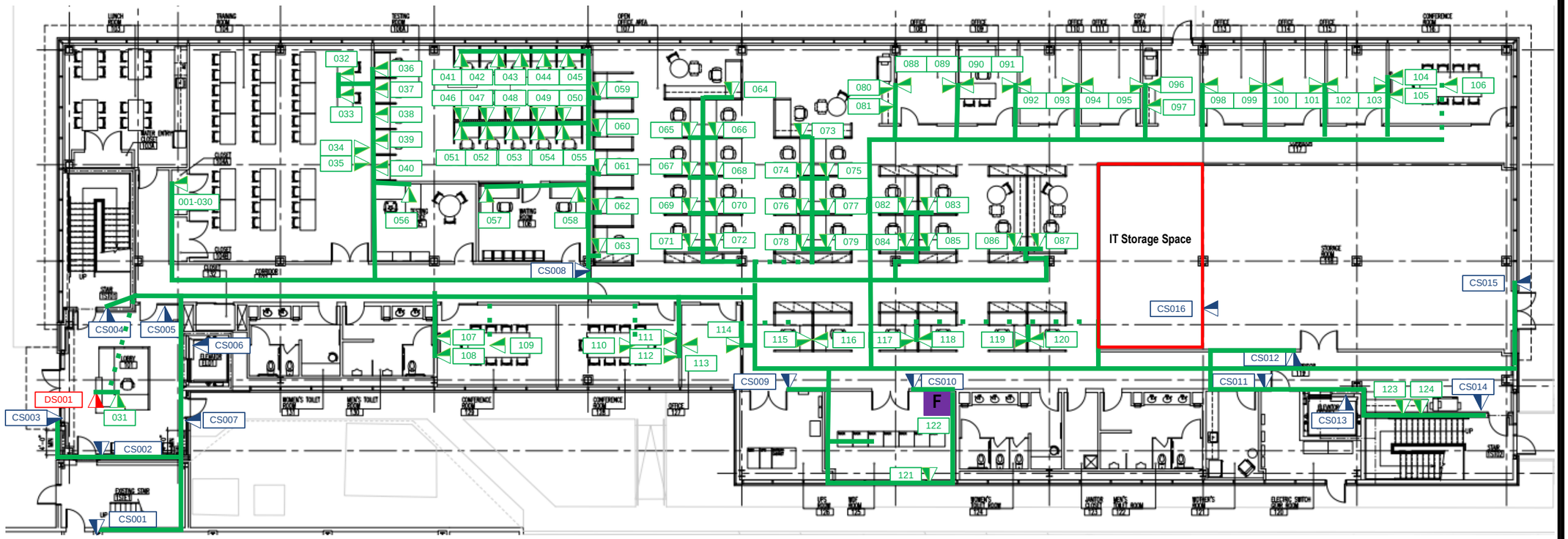

141 CAT-6 Duplex Drops Total

Legend

	CAT 6 Overhead Pathways
	CAT 6 1" Trenched Conduit
124	CAT 6 Duplex Drop
CS016	CAT 6 Duplex Drop – Corporate Security Card Swipe
DS001	CAT 6 Duplex Drop – Corporate Security Duress Button
F 001	CAT 6 Duplex Drop - Femtocell

REVISION NOTES

REV:	DATE:	REVISED BY:
1	-	-
2	-	-
3	-	-
4	-	-
5	-	-
6	-	-
7	-	-
8	-	-
9	-	-
10	-	-

conEdison
4 Irving Place
New York, N.Y. 10003
Tel: 212-460-4600 Fax: 212-982-7816

DEPARTMENT:
IT Communications Infrastructure & Site Design (IT-CISD)

NETWORK ENGINEER:

NETWORK ENG. TEL No.

PROJECT MANAGER: -

PROJECT MGR. TEL No.: -

SITE LOCATION:
R900 – SVOC Building Expansion

WORK DESCRIPTION:
Attachment 01

JOB NUMBER:

DRAWN BY: **Ron Devito**

SCALE: **N.T.S.**

DATE: 03/12/2025

REVISION No.: **REV**

FILE NAME: -

DRAWING TYPE: -

SHEET: **1 OF 3**

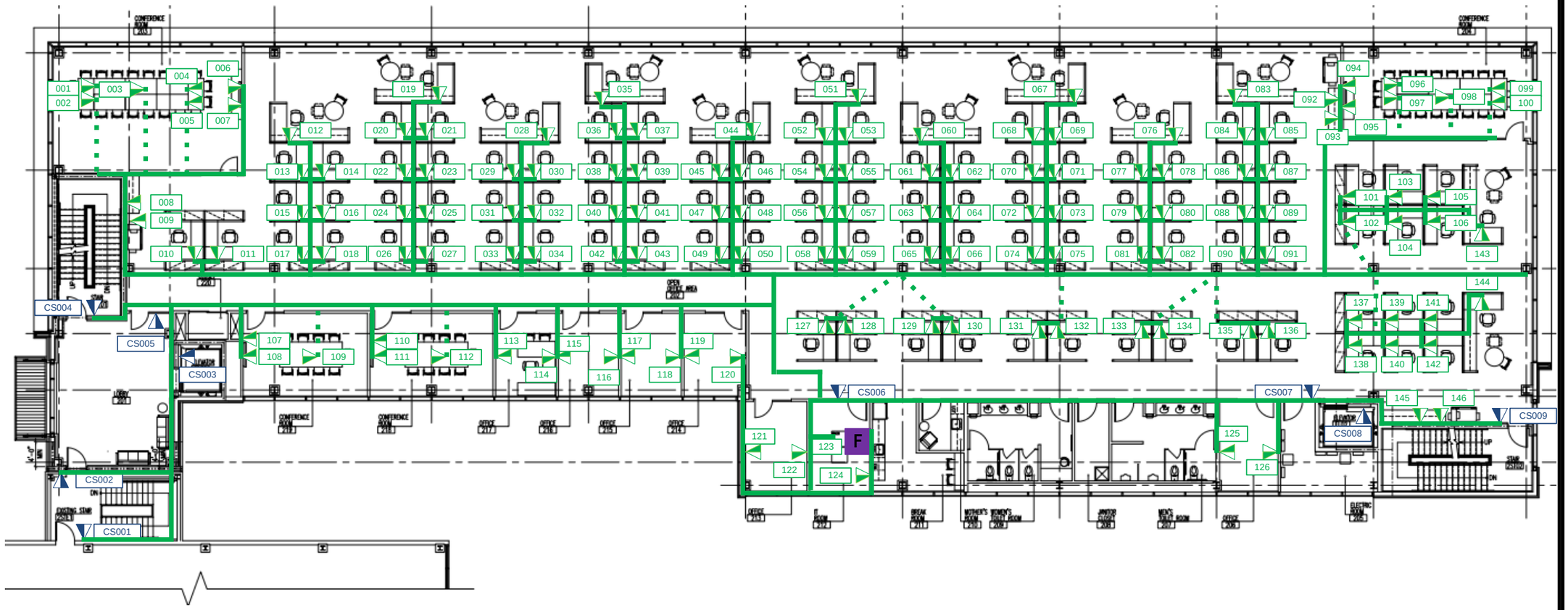

155 CAT-6 Duplex Drops Total

Legend

- CAT 6 Overhead Pathways
- CAT 6 1" Trenched Conduit
- 146 — CAT 6 Duplex Drop
- CS009 — CAT 6 Duplex Drop – Corporate Security Card Swipe
- F 001 — CAT 6 Duplex Drop - Femtocell

REVISION NOTES

REV:	DATE:	REVISED BY:
1	-	-
2	-	-
3	-	-
4	-	-
5	-	-
6	-	-
7	-	-
8	-	-
9	-	-
10	-	-

conEdison
4 Irving Place
New York, N.Y. 10003
Tel: 212-460-4600 Fax: 212-982-7816

DEPARTMENT:
IT Communications Infrastructure & Site Design (IT-CISD)

NETWORK ENGINEER:
NETWORK ENG. TEL No.
PROJECT MANAGER: -
PROJECT MGR. TEL No.: -

SITE LOCATION:
R900 – SVOC Building Expansion

WORK DESCRIPTION:
Attachment 01

JOB NUMBER:		DRAWN BY: Ron Devito
SCALE: N.T.S.	DATE: 03/12/2025	REVISION No. REV
FILE NAME: -		
DRAWING TYPE: -		SHEET: 2 OF 3

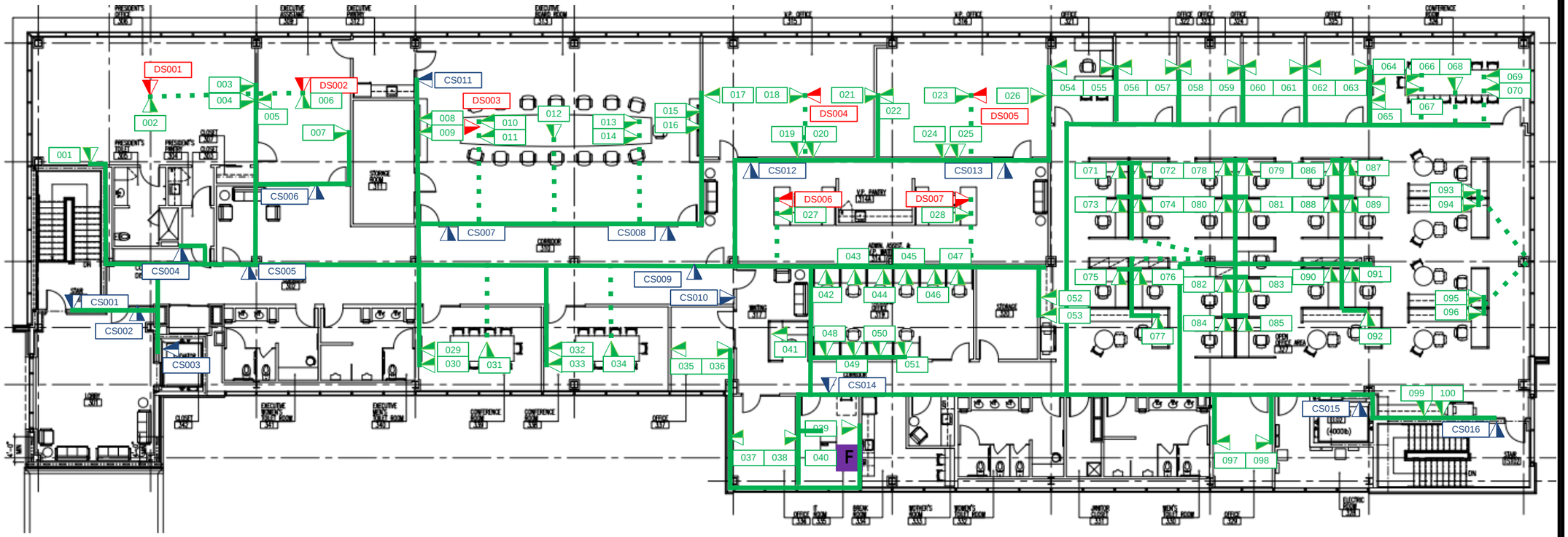

123 CAT-6 Duplex Drops Total

Legend

- CAT 6 Overhead Pathways
- CAT 6 1" Trenched Conduit
- 100 — CAT 6 Duplex Drop
- CS016 — CAT 6 Duplex Drop – Corporate Security Card Swipe
- DS007 — CAT 6 Duplex Drop – Corporate Security Duress Button
- F 001 — CAT 6 Duplex Drop - Femtocell

REVISION NOTES

REV:	DATE:	REVISED BY:
1	-	-
2	-	-
3	-	-
4	-	-
5	-	-
6	-	-
7	-	-
8	-	-
9	-	-
10	-	-

conEdison
4 Irving Place
New York, N.Y. 10003
Tel: 212-460-4600 Fax: 212-982-7816

DEPARTMENT:
IT Communications Infrastructure & Site Design (IT-CISD)

NETWORK ENGINEER:

NETWORK ENG. TEL No.

PROJECT MANAGER: -

PROJECT MGR. TEL No.: -

SITE LOCATION:
R900 – SVOC Building Expansion

WORK DESCRIPTION:
Attachment 01

JOB NUMBER:		DRAWN BY: Ron Devito
SCALE: N.T.S.	DATE: 03/12/2025	REVISION No. REV
FILE NAME: -		
DRAWING TYPE: -		SHEET: 3 OF 3

ATTACHMENT 02 – 1st FLOOR WIFI DEPLOYMENTS

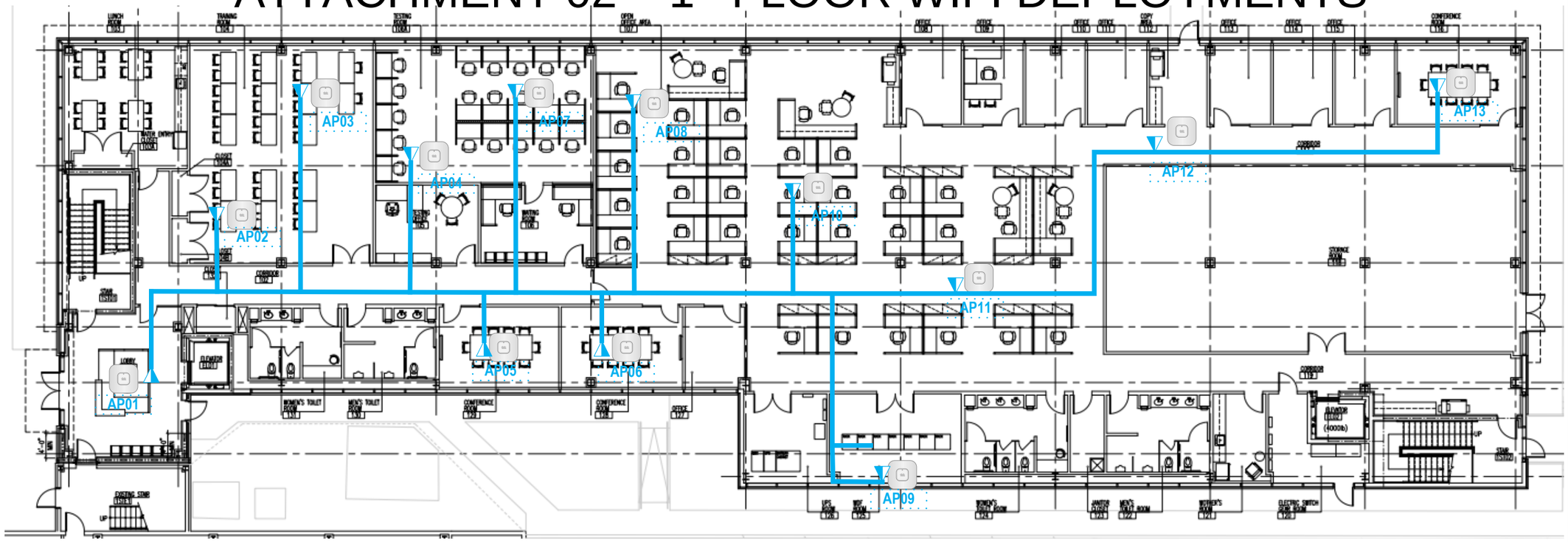

Legend

- CAT 6A Pathways
- CAT 6A Duplex Drop
- WiFi Access Point (13 Total)

REVISION NOTES		
REV:	DATE:	REVISED BY:
REV:	DATE:	REVISED BY:
REV:	DATE:	REVISED BY:
REV:	DATE:	REVISED BY:
REV:	DATE:	REVISED BY:
REV:	DATE:	REVISED BY:
REV:	DATE:	REVISED BY:
REV:	DATE:	REVISED BY:
REV:	DATE:	REVISED BY:

conEdison
4 Irving Place
New York, N.Y. 10003
Tel: 212-460-4600 Fax: 212-982-7816

DEPARTMENT:

IT Communications Infrastructure & Site Design (IT-CISD)

NETWORK ENGINEER:

NETWORK ENG. TEL No.

PROJECT MANAGER
-

PROJECT MGR. TEL No.
-

SITE LOCATION:

R900 – Spring Valley Operations Center

WORK DESCRIPTION:

JOB NUMBER:		DRAWN BY: Devito, Ronald James
SCALE: .25" = 1'	DATE: 02/18/2025	REVISION No. REV 1
FILE NAME:		
		SHEET: 1 OF 3

ATTACHMENT 02 – 2nd FLOOR WIFI DEPLOYMENTS

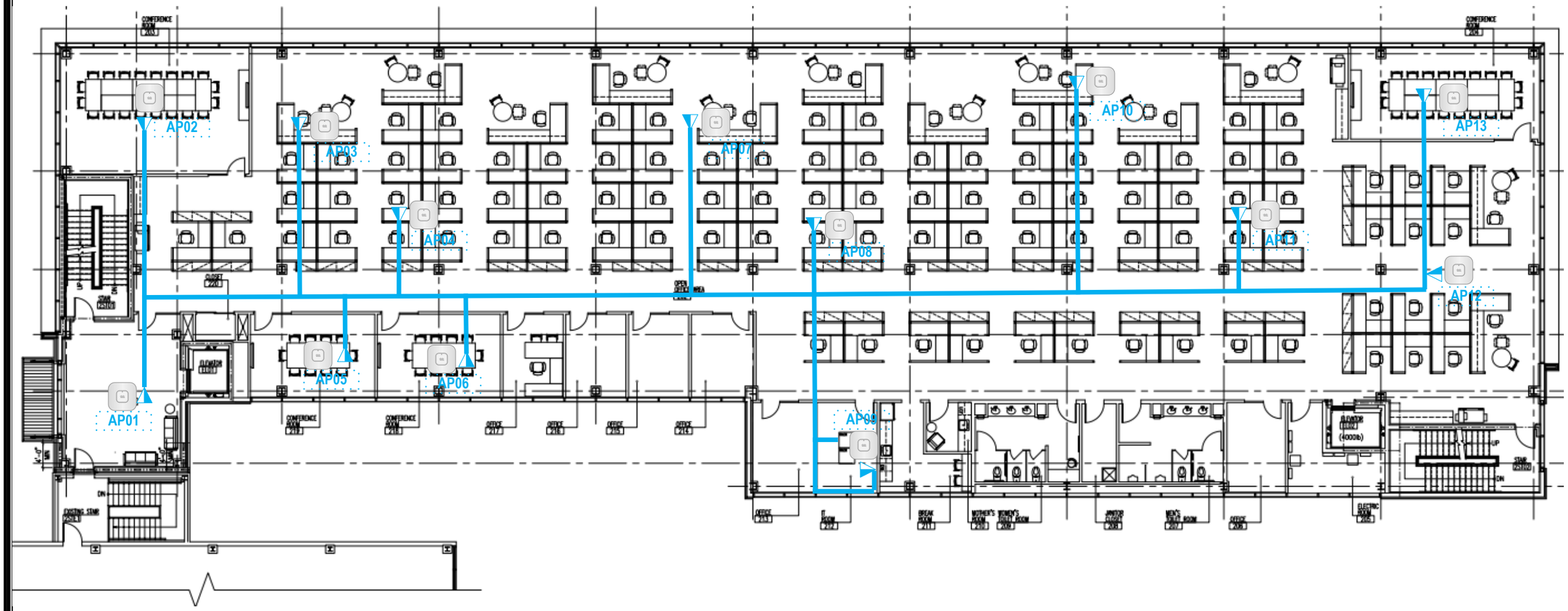

Legend

CAT 6A Pathways

CAT 6A Duplex Drop

WiFi Access Point (13 Total)

REVISION NOTES		
REV:	DATE:	REVISED BY:
REV:	DATE:	REVISED BY:
REV:	DATE:	REVISED BY:
REV:	DATE:	REVISED BY:
REV:	DATE:	REVISED BY:
REV:	DATE:	REVISED BY:
REV:	DATE:	REVISED BY:
REV:	DATE:	REVISED BY:
REV:	DATE:	REVISED BY:

conEdison
4 Irving Place
New York, N.Y. 10003
Tel: 212-460-4600 Fax: 212-982-7816

DEPARTMENT:
IT Communications Infrastructure & Site Design (IT-CISD)

NETWORK ENGINEER:

NETWORK ENG. TEL No.

PROJECT MANAGER
-

PROJECT MGR. TEL No.
-

SITE LOCATION:
R900 – Spring Valley Operations Center

WORK DESCRIPTION:

JOB NUMBER:		DRAWN BY: Devito, Ronald James
SCALE: .25" = 1'	DATE: 02/18/2025	REVISION No. REV 1
FILE NAME:		
		SHEET: 2 OF 3

ATTACHMENT 02 – 3rd FLOOR WIFI DEPLOYMENTS

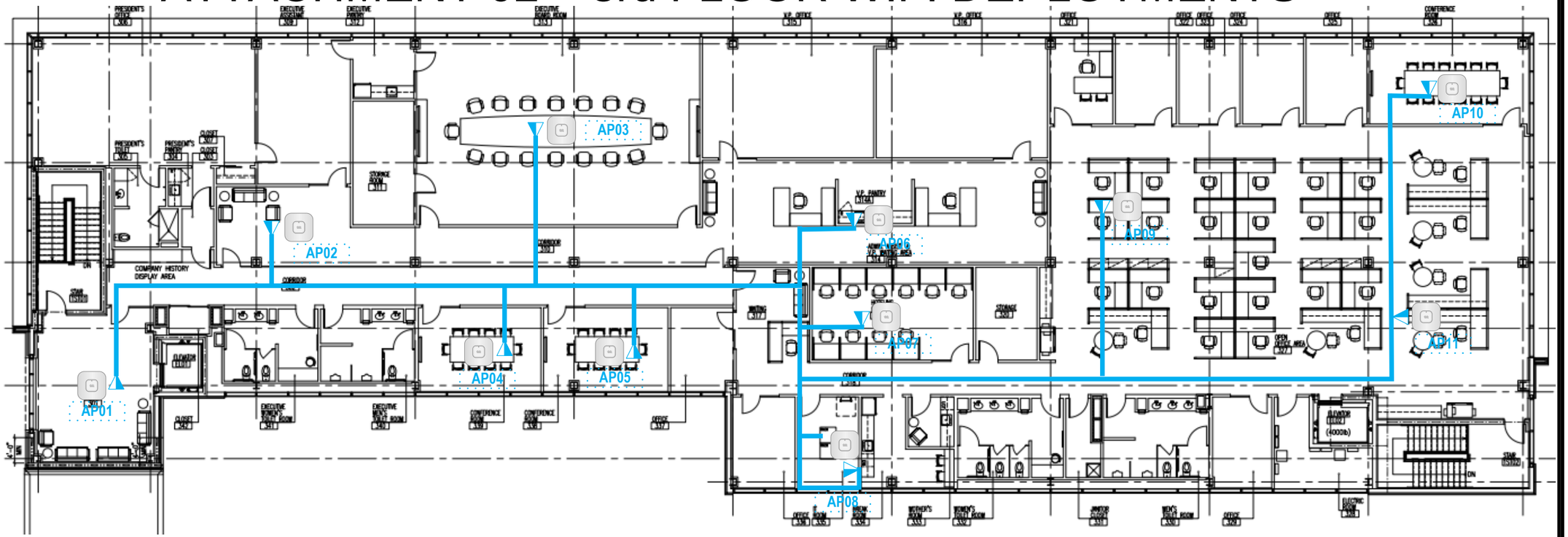

Legend

- CAT 6A Pathways
- CAT 6A Duplex Drop
- WiFi Access Point (11 Total)

REVISION NOTES		
REV:	DATE:	REVISED BY:
REV:	DATE:	REVISED BY:
REV:	DATE:	REVISED BY:
REV:	DATE:	REVISED BY:
REV:	DATE:	REVISED BY:
REV:	DATE:	REVISED BY:
REV:	DATE:	REVISED BY:
REV:	DATE:	REVISED BY:
REV:	DATE:	REVISED BY:

conEdison
4 Irving Place
New York, N.Y. 10003
Tel: 212-460-4600 Fax: 212-982-7816

DEPARTMENT:

IT Communications Infrastructure & Site Design (IT-CISD)

NETWORK ENGINEER:

NETWORK ENG. TEL No.

PROJECT MANAGER

-

PROJECT MGR. TEL No.

-

SITE LOCATION:

R900 – Spring Valley Operations Center

WORK DESCRIPTION:

JOB NUMBER:		DRAWN BY: Devito, Ronald James
SCALE: .25" = 1'	DATE: 02/18/2025	REVISION No. REV 1
FILE NAME:		
		SHEET: 3 OF 3

ATTACHMENT 03 – 1st FLOOR COMM ROOM LAYOUT

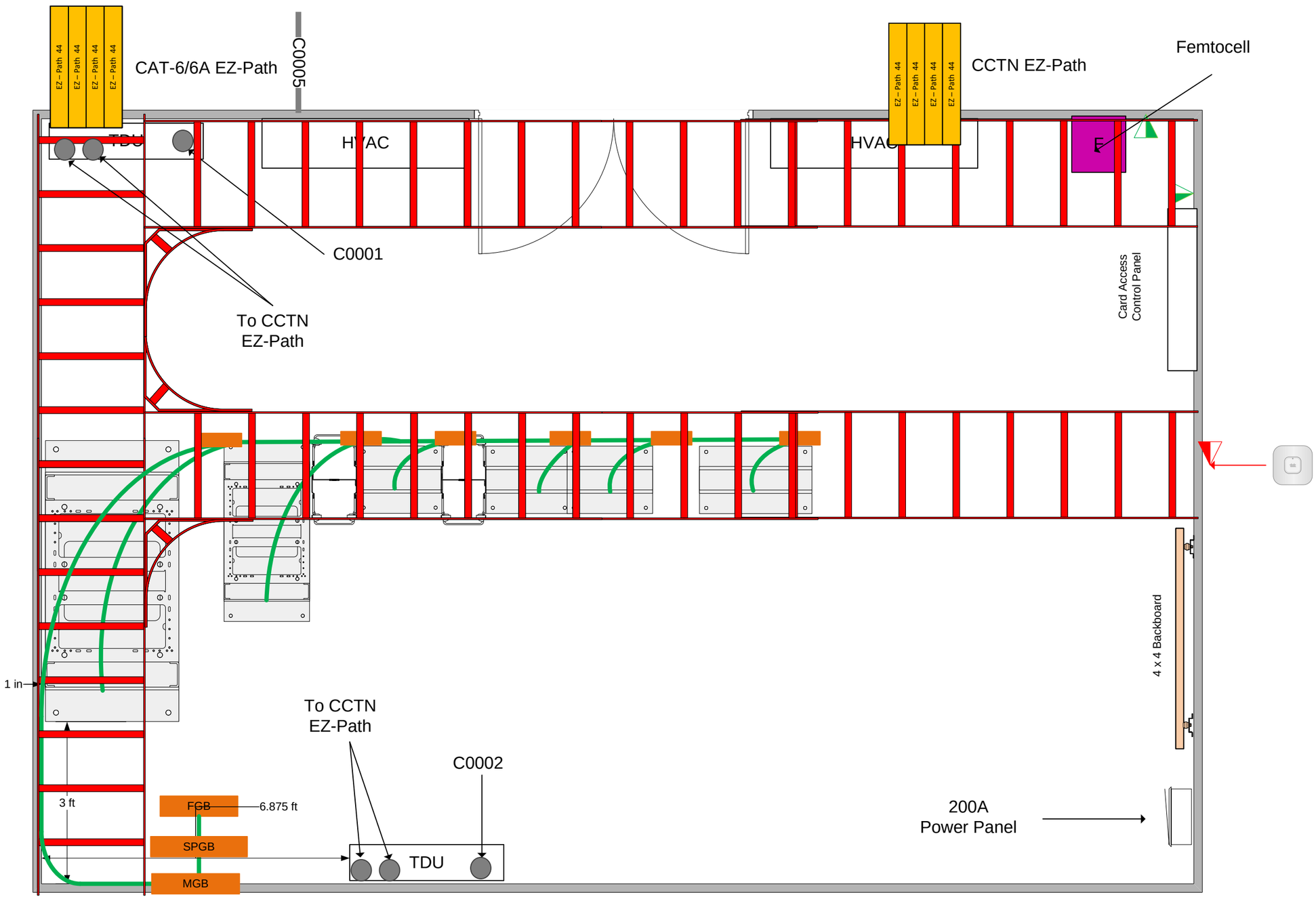

REVISION NOTES		
REV:	DATE:	REVISED BY:
REV:	DATE:	REVISED BY:
REV:	DATE:	REVISED BY:
REV:	DATE:	REVISED BY:
REV:	DATE:	REVISED BY:
REV:	DATE:	REVISED BY:
REV:	DATE:	REVISED BY:
REV:	DATE:	REVISED BY:
REV:	DATE:	REVISED BY:

conEdison
4 Irving Place
New York, N.Y. 10003
Tel: 212-460-4600 Fax: 212-982-7816

DEPARTMENT:

IT Communications Infrastructure & Site Design (IT-CISD)

NETWORK ENGINEER:

NETWORK ENG. TEL No.

PROJECT MANAGER

PROJECT MGR. TEL No.

SITE LOCATION:

R900 – Spring Valley Operations Center

WORK DESCRIPTION:

JOB NUMBER:	DRAWN BY: Devito, Ronald James	
SCALE: .25" = 1'	DATE: 02/18/2025	REVISION No. REV 1
FILE NAME:		
		SHEET: 1 OF 3

ATTACHMENT 03 – Equipment Power
First Floor Comm Room

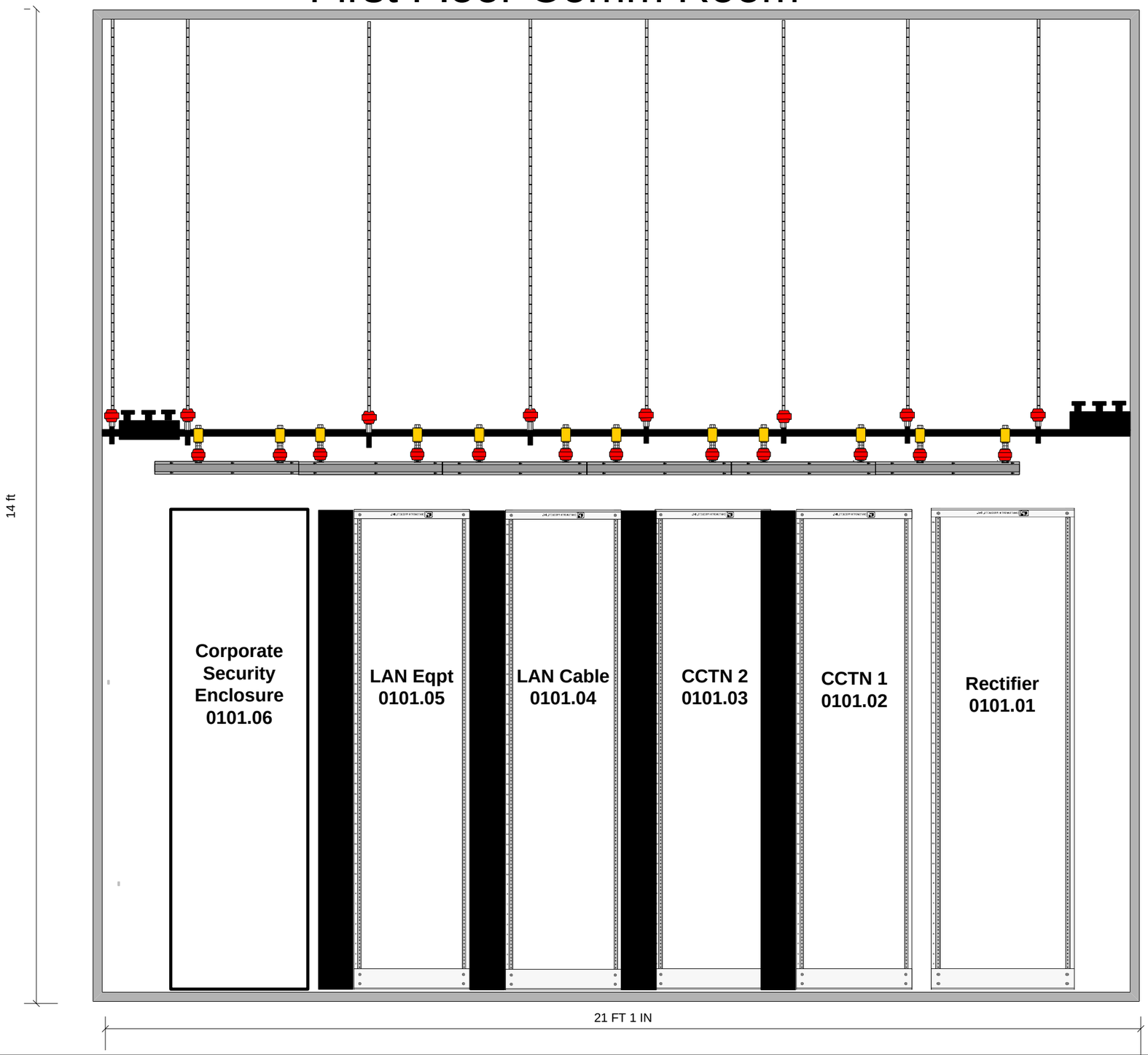

REVISION NOTES

REV:	DATE:	REVISED BY:
REV:	DATE:	REVISED BY:
REV:	DATE:	REVISED BY:
REV:	DATE:	REVISED BY:
REV:	DATE:	REVISED BY:
REV:	DATE:	REVISED BY:
REV:	DATE:	REVISED BY:
REV:	DATE:	REVISED BY:
REV:	DATE:	REVISED BY:
REV:	DATE:	REVISED BY:

conEdison
4 Irving Place
New York, N.Y. 10003
Tel: 212-460-4600 Fax: 212-982-7816

DEPARTMENT:

IT Communications Infrastructure & Site Design (IT-CISD)

NETWORK ENGINEER:

NETWORK ENG. TEL No.

PROJECT MANAGER

PROJECT MGR. TEL No.

SITE LOCATION:

R900 – Spring Valley Operations Center

WORK DESCRIPTION:

JOB NUMBER:		DRAWN BY: Devito, Ronald James
SCALE: .25" = 1'	DATE: 02/18/2025	REVISION No. REV 1
FILE NAME:		
		SHEET: 2 OF 3

ATTACHMENT 03 – POWER RACEWAY DETAIL

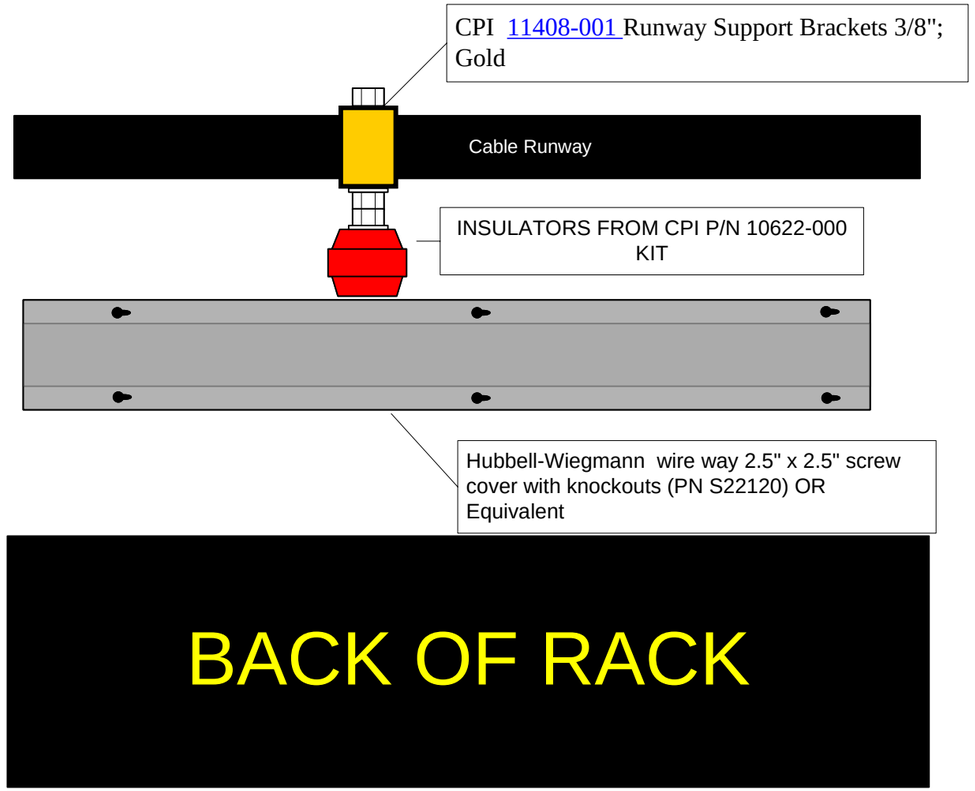

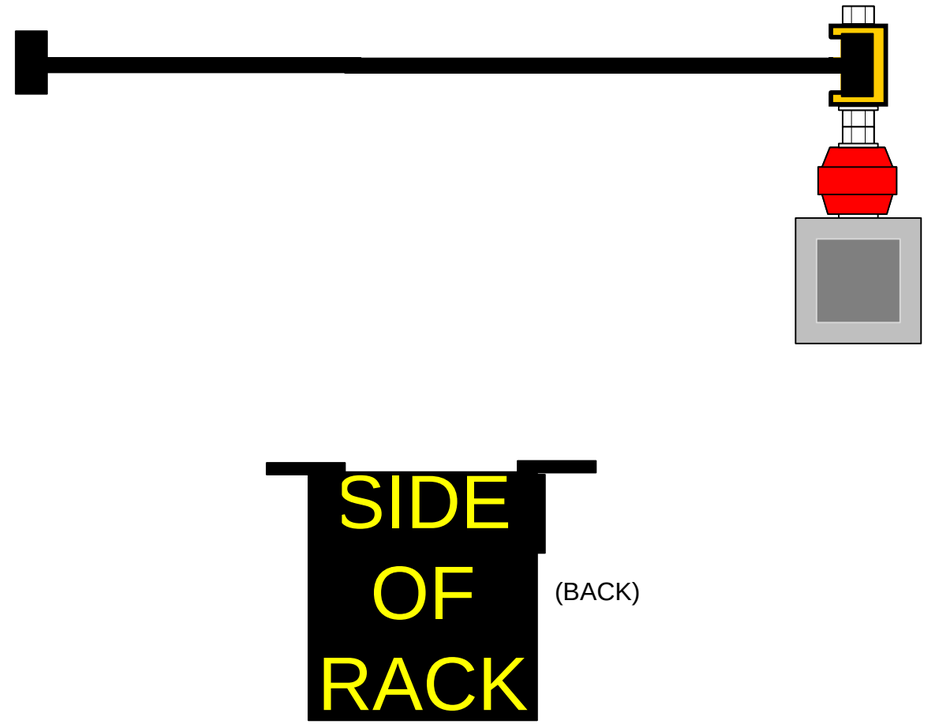

REVISION NOTES

REV:	DATE:	REVISED BY:
REV:	DATE:	REVISED BY:
REV:	DATE:	REVISED BY:
REV:	DATE:	REVISED BY:
REV:	DATE:	REVISED BY:
REV:	DATE:	REVISED BY:
REV:	DATE:	REVISED BY:
REV:	DATE:	REVISED BY:
REV:	DATE:	REVISED BY:
REV:	DATE:	REVISED BY:

conEdison
4 Irving Place
New York, N.Y. 10003
Tel: 212-460-4600 Fax: 212-982-7816

DEPARTMENT:

IT Communications Infrastructure & Site Design (IT-CISD)

NETWORK ENGINEER:

NETWORK ENG. TEL No.

PROJECT MANAGER

PROJECT MGR. TEL No.

SITE LOCATION:

R900 – Spring Valley Operations Center

WORK DESCRIPTION:

JOB NUMBER:		DRAWN BY: Devito, Ronald James
SCALE: .25" = 1'	DATE: 02/18/2025	REVISION No. REV 1
FILE NAME:		
		SHEET: 3 OF 3

ATTACHMENT 03 – 1st FLOOR COMM ROOM POWER OUTLETS

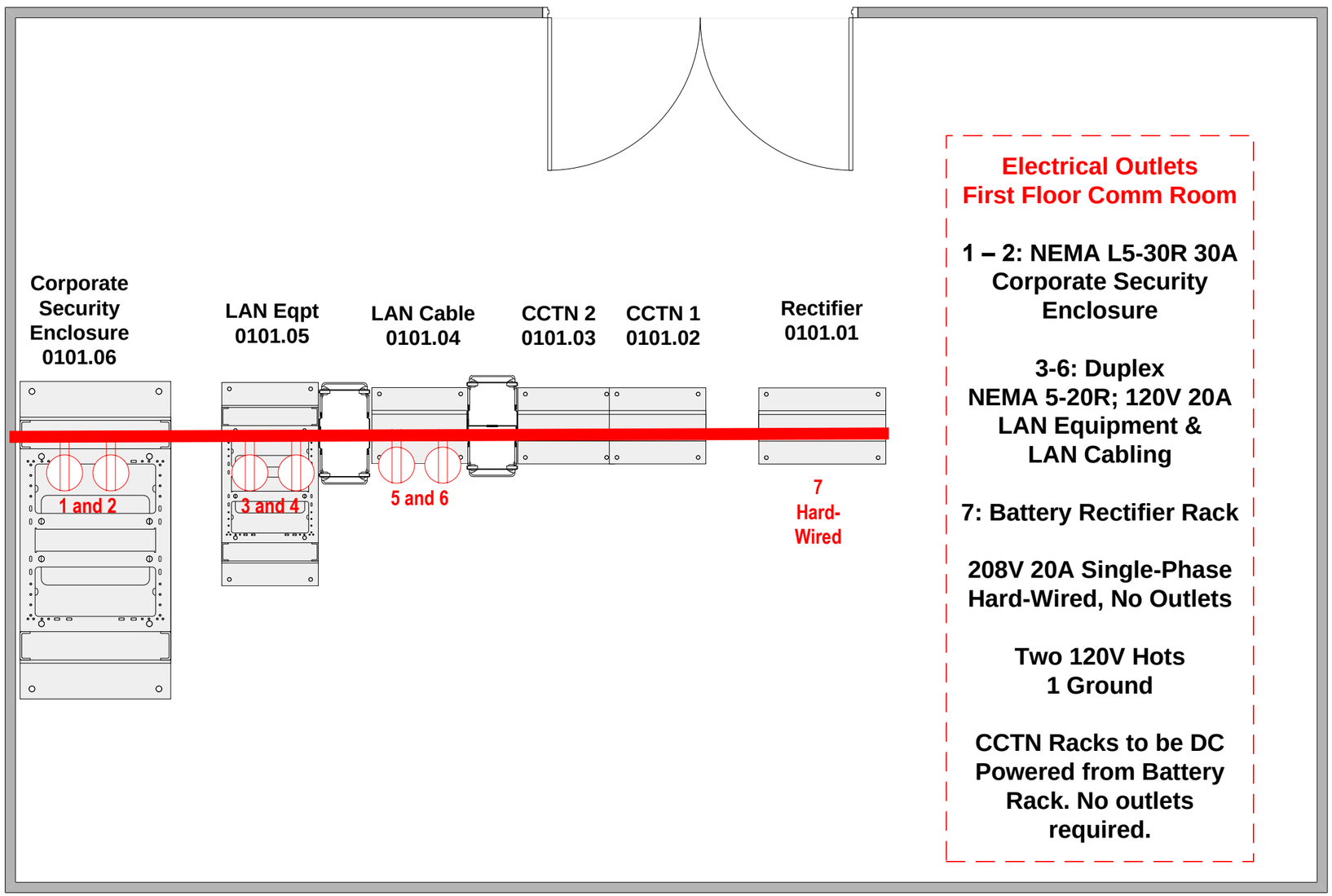

Electrical Outlets
First Floor Comm Room

1 – 2: NEMA L5-30R 30A
Corporate Security Enclosure

3-6: Duplex
NEMA 5-20R; 120V 20A
LAN Equipment & LAN Cabling

7: Battery Rectifier Rack

208V 20A Single-Phase Hard-Wired, No Outlets

Two 120V Hots
1 Ground

CCTN Racks to be DC Powered from Battery Rack. No outlets required.

REVISION NOTES

REV:	DATE:	REVISED BY:
REV:	DATE:	REVISED BY:
REV:	DATE:	REVISED BY:
REV:	DATE:	REVISED BY:
REV:	DATE:	REVISED BY:
REV:	DATE:	REVISED BY:
REV:	DATE:	REVISED BY:
REV:	DATE:	REVISED BY:
REV:	DATE:	REVISED BY:
REV:	DATE:	REVISED BY:

conEdison
4 Irving Place
New York, N.Y. 10003
Tel: 212-460-4600 Fax: 212-982-7816

DEPARTMENT:
IT Communications Infrastructure & Site Design (IT-CISD)

NETWORK ENGINEER:
NETWORK ENG. TEL No.
PROJECT MANAGER
PROJECT MGR. TEL No.

SITE LOCATION:
R900 – Spring Valley Operations Center

WORK DESCRIPTION:

JOB NUMBER:	DRAWN BY: Devito, Ronald James	
SCALE: .25" = 1'	DATE: 02/18/2025	REVISION No. REV 1
FILE NAME:		
		SHEET: 4 OF 3

ATTACHMENT 03 – 2nd FLOOR LAN ROOM LAYOUT

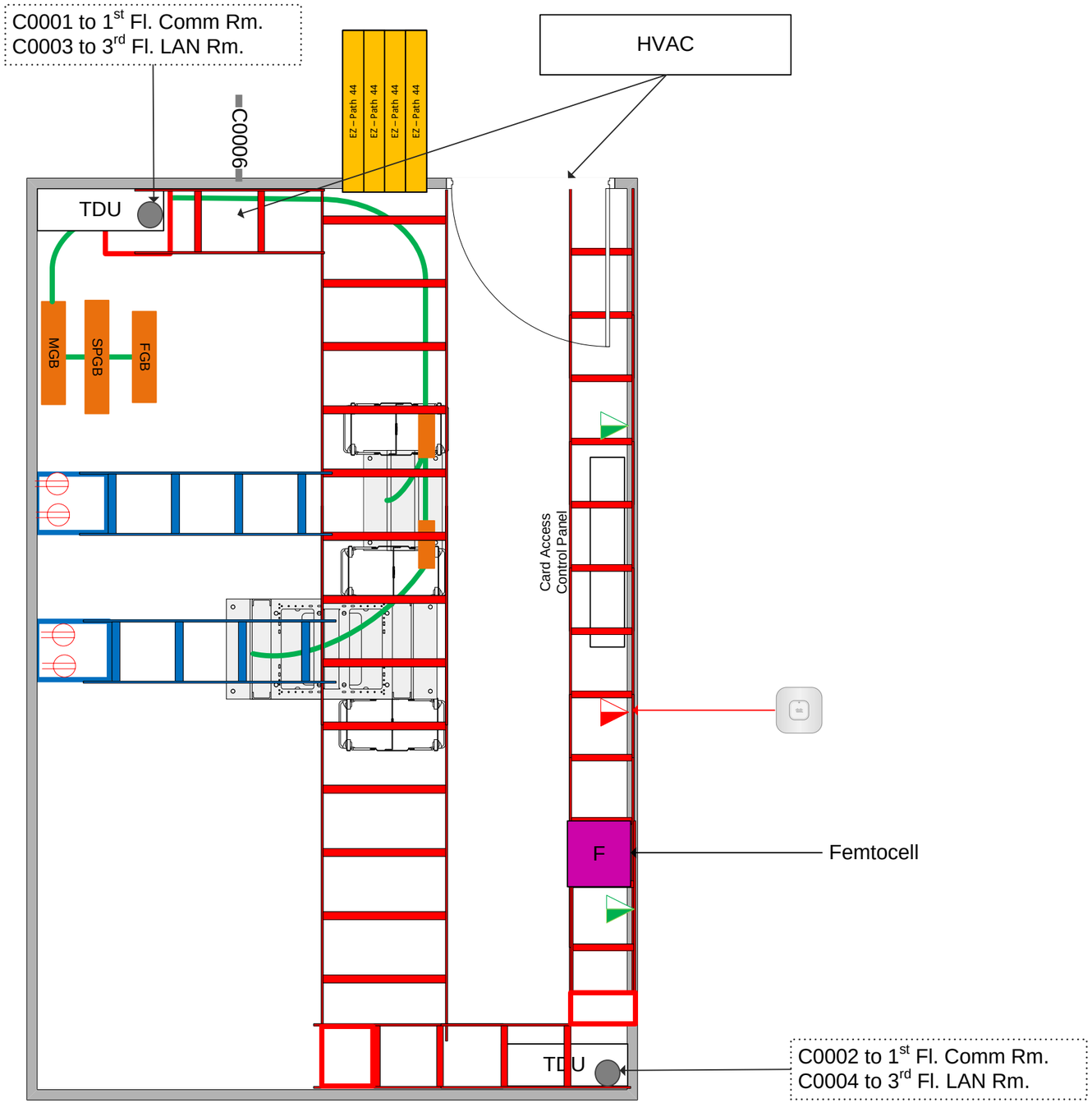

REVISION NOTES		
REV:	DATE:	REVISED BY:
REV:	DATE:	REVISED BY:
REV:	DATE:	REVISED BY:
REV:	DATE:	REVISED BY:
REV:	DATE:	REVISED BY:
REV:	DATE:	REVISED BY:
REV:	DATE:	REVISED BY:
REV:	DATE:	REVISED BY:
REV:	DATE:	REVISED BY:
REV:	DATE:	REVISED BY:

conEdison
4 Irving Place
New York, N.Y. 10003
Tel: 212-460-4600 Fax: 212-982-7816

DEPARTMENT:

IT Communications Infrastructure & Site Design (IT-CISD)

NETWORK ENGINEER:

NETWORK ENG. TEL No.

PROJECT MANAGER

PROJECT MGR. TEL No.

SITE LOCATION:

R900 – Spring Valley Operations Center

WORK DESCRIPTION:

JOB NUMBER:	DRAWN BY: Devito, Ronald James	
SCALE: .25" = 1'	DATE: 02/18/2025	REVISION No. REV 1
FILE NAME:		
		SHEET: 5 OF 3

ATTACHMENT 03 – 3rd FLOOR LAN ROOM LAYOUT

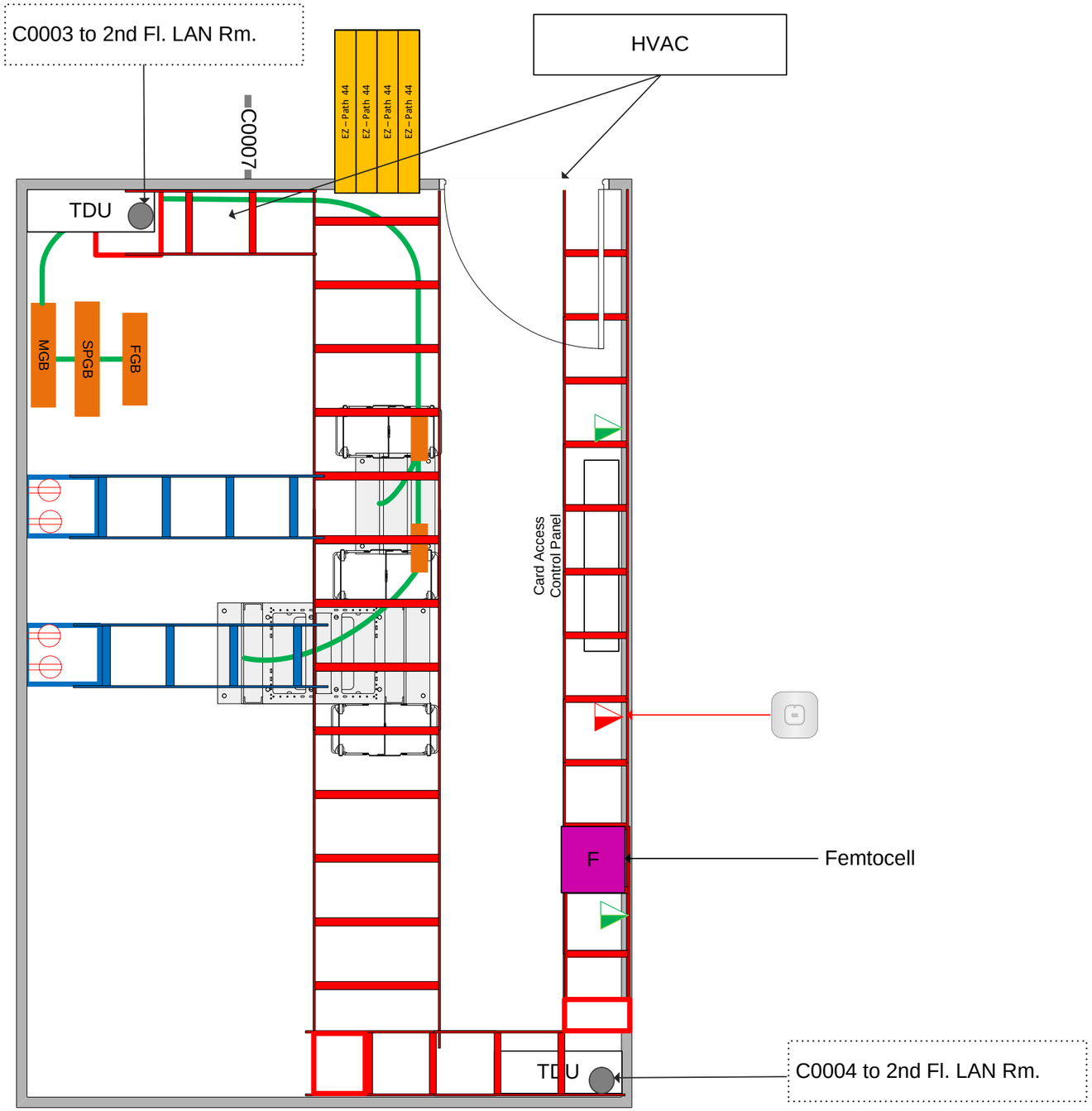

REVISION NOTES

REV:	DATE:	REVISED BY:
REV:	DATE:	REVISED BY:
REV:	DATE:	REVISED BY:
REV:	DATE:	REVISED BY:
REV:	DATE:	REVISED BY:
REV:	DATE:	REVISED BY:
REV:	DATE:	REVISED BY:
REV:	DATE:	REVISED BY:
REV:	DATE:	REVISED BY:
REV:	DATE:	REVISED BY:

conEdison
4 Irving Place
New York, N.Y. 10003
Tel: 212-460-4600 Fax: 212-982-7816

DEPARTMENT:

IT Communications Infrastructure & Site Design (IT-CISD)

NETWORK ENGINEER:

NETWORK ENG. TEL No.

PROJECT MANAGER

PROJECT MGR. TEL No.

SITE LOCATION:

R900 – Spring Valley Operations Center

WORK DESCRIPTION:

JOB NUMBER:		DRAWN BY: Devito, Ronald James
SCALE: .25" = 1'	DATE: 02/18/2025	REVISION No. REV 1
FILE NAME:		
		SHEET: 6 OF 3

ATTACHMENT 03 – CONDUIT SCHEDULE

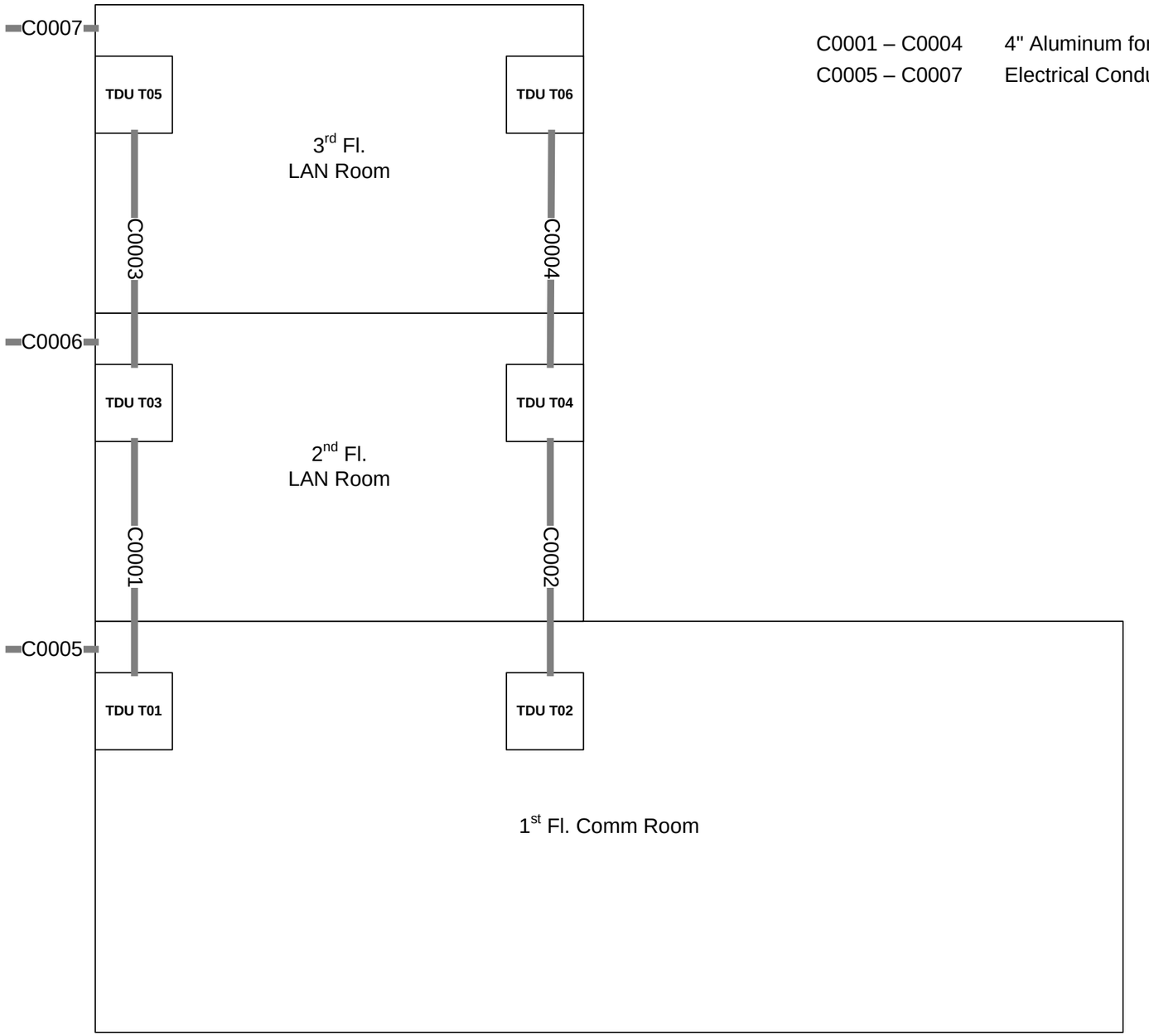

C0001 – C0004	4" Aluminum for Fiber Risers
C0005 – C0007	Electrical Conduits for Room Circuits

REVISION NOTES

REV:	DATE:	REVISED BY:
REV:	DATE:	REVISED BY:
REV:	DATE:	REVISED BY:
REV:	DATE:	REVISED BY:
REV:	DATE:	REVISED BY:
REV:	DATE:	REVISED BY:
REV:	DATE:	REVISED BY:
REV:	DATE:	REVISED BY:
REV:	DATE:	REVISED BY:
REV:	DATE:	REVISED BY:

conEdison
4 Irving Place
New York, N.Y. 10003
Tel: 212-460-4600 Fax: 212-982-7816

DEPARTMENT:

IT Communications Infrastructure & Site Design (IT-CISD)

NETWORK ENGINEER:

NETWORK ENG. TEL No.

PROJECT MANAGER

PROJECT MGR. TEL No.

SITE LOCATION:

R900 – Spring Valley Operations Center

WORK DESCRIPTION:

JOB NUMBER:	DRAWN BY: Devito, Ronald James
SCALE: .25" = 1'	DATE: 02/18/2025
REVISION No. REV 1	
FILE NAME:	
SHEET: 7 OF 3	

ATTACHMENT 04 - 1ST Floor Comm Room Rack Elevations

R6 - CORPORATE SECURITY 30" WIDE DVR ENCLOSURE

45	45
44	44
43	43
42	42
41	41
40	40
39	39
38	38
37	37
36	36
35	35
34	34
33	33
32	32
31	31
30	30
29	29
28	28
27	27
26	26
25	25
24	24
23	23
22	22
21	21
20	20
19	19
18	18
17	17
16	16
15	15
14	14
13	13
12	12
11	11
10	10
09	09
08	08
07	07
06	06
05	05
04	04
03	03
02	02
01	01

R6 - CORPORATE SECURITY 30" WIDE DVR ENCLOSURE

RR #0101.06

R5 - LAN EQUIPMENT RACK 4-Post 19"

45	Copper Buss Bar (rear of rack)	45
44		44
43	Schneider Electric NetBotz 250A	43
42	Schneider Electric AP4450	42
41	Siemon 1U Blank panel	41
40	Cisco 9500	40
39	CPI 30139-719 - 1U Wire Manager	39
38	Cisco C9200L-48P-4G LAN 1 Switch 1	38
37	CPI 30139-719 - 1U Wire Manager	37
36	Cisco C9200L-48P-4G LAN 1 Switch 2	36
35	CPI 30139-719 - 1U Wire Manager	35
34	Cisco C9200L-48P-4G LAN 1 Switch 3	34
33	CPI 30139-719 - 1U Wire Manager	33
32	Cisco C9200L-48P-4G LAN 2 Switch 1	32
31	CPI 30139-719 - 1U Wire Manager	31
30	Cisco C9200L-48P-4G LAN 2 Switch 2	30
29	CPI 30139-719 - 1U Wire Manager	29
28	Cisco C9200L-48P-4G LAN 2 Switch 3	28
27	CPI 30139-719 - 1U Wire Manager	27
26	Cisco C9200L-48P-4G Corp Sec	26
25	CPI 30139-719 - 1U Wire Manager	25
24	Siemon 2U Blank panel	24
23		23
22	Siemon 3U Blank panel	22
21		21
20		20
19	Siemon 3U Blank panel	19
18		18
17		17
16	Siemon 3U Blank panel	16
15		15
14		14
13	Siemon 3U Blank panel	13
12		12
11		11
10	AP7800B PDU 1	10
09	AP7800B PDU 2	09
08	APC SRT2200RMXLA	08
07		07
06	SRT72RMBP	06
05		05
04	APC SRT2200RMXLA	04
03		03
02	SRT72RMBP	02
01		01

R5 - LAN EQUIPMENT RACK 4-Post 19"

RR #0101.05

R4 - LAN CABLING RACK 2-Post 19"

45	Copper Buss Bar (rear of rack)	45
44		44
43	Fiber Tray PCH-04U	43
42		42
41		41
40		40
39	Siemon 1U Blank panel	39
38	Siemon MAX-PNL-48 Wireless AP CAT 6A Drops 1-12	38
37		37
36	CPI 30139-719 - 1U Wire Manager	36
35	Siemon MAX-PNL-48 Corp. Sec. CAT 6 Drops 1 - 17	35
34		34
33	Siemon 1U Blank panel	33
32	Siemon MAX-PNL-72 Work Area CAT 6 Drops 1-36	32
31		31
30	CPI 30139-719 - 1U Wire Manager	30
29	Siemon MAX-PNL-72 Work Area CAT 6 Drops 37-72	29
28		28
27	CPI 30139-719 - 1U Wire Manager	27
26	Siemon MAX-PNL-72 Work Area CAT 6 Drops 73-108	26
25		25
24	CPI 30139-719 - 1U Wire Manager	24
23	Siemon MAX-PNL-72 Work Area CAT 6 Drops 109-124	23
22		22
21	Siemon 1U Blank panel	21
20	Siemon 3U Blank panel	20
19		19
18		18
17	Siemon 3U Blank panel	17
16		16
15		15
14	Siemon 3U Blank panel	14
13		13
12		12
11	Siemon 3U Blank panel	11
10		10
09		09
08	Siemon 3U Blank panel	08
07		07
06		06
05	Siemon 3U Blank panel	05
04		04
03		03
02	Siemon 2U Blank panel	02
01		01

R4 - LAN CABLING RACK 2-Post 19"

RR #0101.04

R3 - CTTN Rack 2 2-Post 19"

45	Copper Buss Bar (rear of rack)	45
44		44
43	Telect Fuse Alarm Panel	43
42		42
41	Sumitomo FT-9-288XFQX2U	41
40		40
39	Reserved for Future Sumitomo FT-9-288XFQX2U	39
38		38
37	Reserved for Future Sumitomo FT-9-288XFQX2U	37
36		36
35		35
34	Cisco NCS-2006	34
33		33
32		32
31	Cisco ONS 15216	31
30		30
29		29
28	Cisco NCS2K-MF-1RU=	28
27		27
26	Nokia SAR 7705-18	26
25		25
24		24
23		23
22		22
21		21
20		20
19		19
18		18
17		17
16		16
15		15
14	ADC Di-M2GU1	14
13		13
12		12
11		11
10		10
09	NetGuardian-864G5	09
08		08
07		07
06		06
05		05
04		04
03		03
02		02
01		01

R3 - CCTN RACK 2 2-Post 19"

RR #0101.03

R2 - CCTN Rack 1 2-Post 19"

45	Copper Buss Bar (rear of rack)	45
44		44
43	Telect Fuse Alarm Panel	43
42		42
41	Sumitomo FT-9-288XFQX2U	41
40		40
39	Reserved for Future Sumitomo FT-9-288XFQX2U	39
38		38
37	Reserved for Future Sumitomo FT-9-288XFQX2U	37
36		36
35		35
34	Cisco NCS-2006	34
33		33
32		32
31	Cisco ONS 15216	31
30		30
29		29
28	Cisco NCS2K-MF-1RU=	28
27		27
26	Nokia SAR 7705-18	26
25		25
24		24
23		23
22		22
21		21
20		20
19		19
18		18
17		17
16		16
15		15
14	ADC Di-M2GU1	14
13		13
12		12
11		11
10		10
09		09
08		08
07		07
06		06
05		05
04		04
03		03
02		02
01		01

R2 - CCTN RACK 1 2-Post 19"

RR #0101.02

R1 - DC Powerplant / Battery Rack 2-Post 23"

45	Copper Buss Bar (rear of rack)	45
44		44
43		43
42	CXPS-E3 Power System 0919006-002	42
41		41
40		40
39	Cordex 2.4kW Rectifier Module 0100003-001	39
38		38
37		37
36		36
35		35
34	100 AH shelf 4	34
33		33
32		32
31		31
30		30
29		29
28		28
27		27
26	100 AH shelf 3	26
25		25
24		24
23		23
22		22
21		21
20		20
19		19
18	100 AH shelf 2	18
17		17
16		16
15		15
14		14
13		13
12		12
11		11
10	100 AH shelf 1	10
09		09
08		08
07		07
06		06
05		05
04		04
03		03
02		02
01		01

R1 - DC Powerplant / Battery Rack 2-Post 23"

RR #0101.01

Items shown in green shall be supplied and installed by the LAN Cabling Contractor.

Items Shown in yellow shall be supplied by Con Ed and Installed by the LAN Cabling Contractor.

Items shown in red shall be supplied and installed by the Corporate Security Contractor.

Items shown in orange shall be supplied and installed by ConEd and the CCTN Contractor.

ATTACHMENT 04 - 2nd Floor LAN Room Rack Elevations

R2 - LAN EQUIPMENT RACK		
45	Copper Buss Bar (rear of rack)	45
44		44
43	Schneider Electric NetBotz 250A	43
42	Schneider Electric AP4450	42
41	Siemon 1U Blank panel	41
40	Cisco C9200L-48P-4G LAN 1 Switch 1	40
39	CPI 30139-719 - 1U Wire Manager	39
38	Cisco C9200L-48P-4G LAN 1 Switch 2	38
37	CPI 30139-719 - 1U Wire Manager	37
36	Cisco C9200L-48P-4G LAN 1 Switch 3	36
35	CPI 30139-719 - 1U Wire Manager	35
34	Cisco C9200L-48P-4G LAN 2 Switch 1	34
33	CPI 30139-719 - 1U Wire Manager	33
32	Cisco C9200L-48P-4G LAN 2 Switch 2	32
31	CPI 30139-719 - 1U Wire Manager	31
30	Cisco C9200L-48P-4G LAN 2 Switch 3	30
29	CPI 30139-719 - 1U Wire Manager	29
28	Cisco C9200L-48P-4G Corp Sec	28
27	CPI 30139-719 - 1U Wire Manager	27
26	Siemon 3U Blank panel	26
25		25
24		24
23	Siemon 3U Blank panel	23
22		22
21		21
20	Siemon 3U Blank panel	20
19		19
18		18
17	Siemon 3U Blank panel	17
16		16
15		15
14	Siemon 3U Blank panel	14
13		13
12		12
11	Siemon 1U Blank panel	11
10	AP7800B PDU 1	10
09	AP7800B PDU 2	09
08	APC SRT2200RMXLA	08
07		07
06	SRT72RMBP	06
05		05
04	APC SRT2200RMXLA	04
03		03
02	SRT72RMBP	02
01		01
R2 - LAN EQUIPMENT RACK		

RR #0201.02

R1 - LAN CABLING RACK		
45	Copper Buss Bar (rear of rack)	45
44		44
43	Fiber Tray CCH-04U	43
42		42
41		41
40		40
39	Siemon 1U Blank panel	39
38	Siemon MAX-PNL-48 Wireless AP CAT 6A Drops 1-12	38
37		37
36	CPI 30139-719 - 1U Wire Manager	36
35	Siemon MAX-PNL-48 Corp. Sec. CAT 6 Drops 1 - 9	35
34		34
33	Siemon MAX-PNL-72 Work Area CAT 6 Drops 1-36	33
32		32
31	CPI 30139-719 - 1U Wire Manager	31
30	Siemon MAX-PNL-72 Work Area CAT 6 Drops 37-72	30
29		29
28	CPI 30139-719 - 1U Wire Manager	28
27	Siemon MAX-PNL-72 Work Area CAT 6 Drops 73-108	27
26		26
25	CPI 30139-719 - 1U Wire Manager	25
24	Siemon MAX-PNL-72 Work Area CAT 6 Drops 109-144	24
23		23
22	CPI 30139-719 - 1U Wire Manager	22
21	Siemon MAX-PNL-72 Work Area CAT 6 Drops 145-146	21
20		20
19	CPI 30139-719 - 1U Wire Manager	19
18	Siemon 3U Blank panel	18
17		17
16		16
15	Siemon 3U Blank panel	15
14		14
13		13
12	Siemon 3U Blank panel	12
11		11
10		10
09	Siemon 3U Blank panel	09
08		08
07		07
06	Siemon 3U Blank panel	06
05		05
04		04
03	Siemon 3U Blank panel	03
02		02
01		01
R1 - LAN CABLING RACK		

RR #0201.01

Items shown in green shall be supplied and installed by the LAN Cabling Contractor.

Items Shown in yellow shall be supplied by Con Ed and Installed by the LAN Cabling Contractor.

ATTACHMENT 04 - 3rd Floor LAN Room Rack Elevations

R2 - LAN EQUIPMENT RACK		
45	Copper Buss Bar (rear of rack)	45
44		44
43	Schneider Electric NetBotz 250A	43
42	Schneider Electric AP4450	42
41	Siemon 1U Blank panel	41
40	Cisco C9200L-48P-4G LAN 1 Switch 1	40
39	CPI 30139-719 - 1U Wire Manager	39
38	Cisco C9200L-48P-4G LAN 1 Switch 2	38
37	CPI 30139-719 - 1U Wire Manager	37
36	Cisco C9200L-48P-4G LAN 1 Switch 3	36
35	CPI 30139-719 - 1U Wire Manager	35
34	Cisco C9200L-48P-4G LAN 2 Switch 1	34
33	CPI 30139-719 - 1U Wire Manager	33
32	Cisco C9200L-48P-4G LAN 2 Switch 2	32
31	CPI 30139-719 - 1U Wire Manager	31
30	Cisco C9200L-48P-4G LAN 2 Switch 3	30
29	CPI 30139-719 - 1U Wire Manager	29
28	Cisco C9200L-48P-4G Corp Sec	28
27	CPI 30139-719 - 1U Wire Manager	27
26	Siemon 3U Blank panel	26
25		25
24		24
23	Siemon 3U Blank panel	23
22		22
21		21
20	Siemon 3U Blank panel	20
19		19
18		18
17	Siemon 3U Blank panel	17
16		16
15		15
14	Siemon 3U Blank panel	14
13		13
12		12
11	Siemon 1U Blank panel	11
10	AP7800B PDU 1	10
09	AP7800B PDU 2	09
08	APC SRT2200RMXLA	08
07		07
06	SRT72RMBP	06
05		05
04	APC SRT2200RMXLA	04
03		03
02	SRT72RMBP	02
01		01
R2 - LAN EQUIPMENT RACK		

RR #0301.02

R1 - LAN CABLING RACK		
45	Copper Buss Bar (rear of rack)	45
44		44
43	Fiber Tray CCH-04U	43
42		42
41		41
40		40
39	Siemon 1U Blank panel	39
38	Siemon MAX-PNL-48 Wireless AP Cat 6A Drops 1-12	38
37		37
36	CPI 30139-719 - 1U Wire Manager	36
35	Siemon MAX-PNL-48 Corp. Sec. CAT 6 Drops 1 - 23	35
34		34
33	CPI 30139-719 - 1U Wire Manager	33
32	Siemon MAX-PNL-72 Work Area CAT 6 Drops 1-36	32
31		31
30	CPI 30139-719 - 1U Wire Manager	30
29	Siemon MAX-PNL-72 Work Area CAT 6 Drops 37-72	29
28		28
27	CPI 30139-719 - 1U Wire Manager	27
26	Siemon MAX-PNL-72 Work Area CAT 6 Drops 73-100	26
25		25
24	CPI 30139-719 - 1U Wire Manager	24
23	Siemon 3U Blank panel	23
22		22
21		21
20	Siemon 3U Blank panel	20
19		19
18		18
17	Siemon 3U Blank panel	17
16		16
15		15
14	Siemon 3U Blank panel	14
13		13
12		12
11	Siemon 3U Blank panel	11
10		10
09		09
08	Siemon 3U Blank panel	08
07		07
06		06
05	Siemon 3U Blank panel	05
04		04
03		03
02	Siemon 2U Blank panel	02
01		01
R1 - LAN CABLING RACK		

RR #0301.01

Items shown in green shall be supplied and installed by the LAN Cabling Contractor.

Items Shown in yellow shall be supplied by Con Ed and Installed by the LAN Cabling Contractor.

ATTACHMENT 05 – LAN Fiber Ties

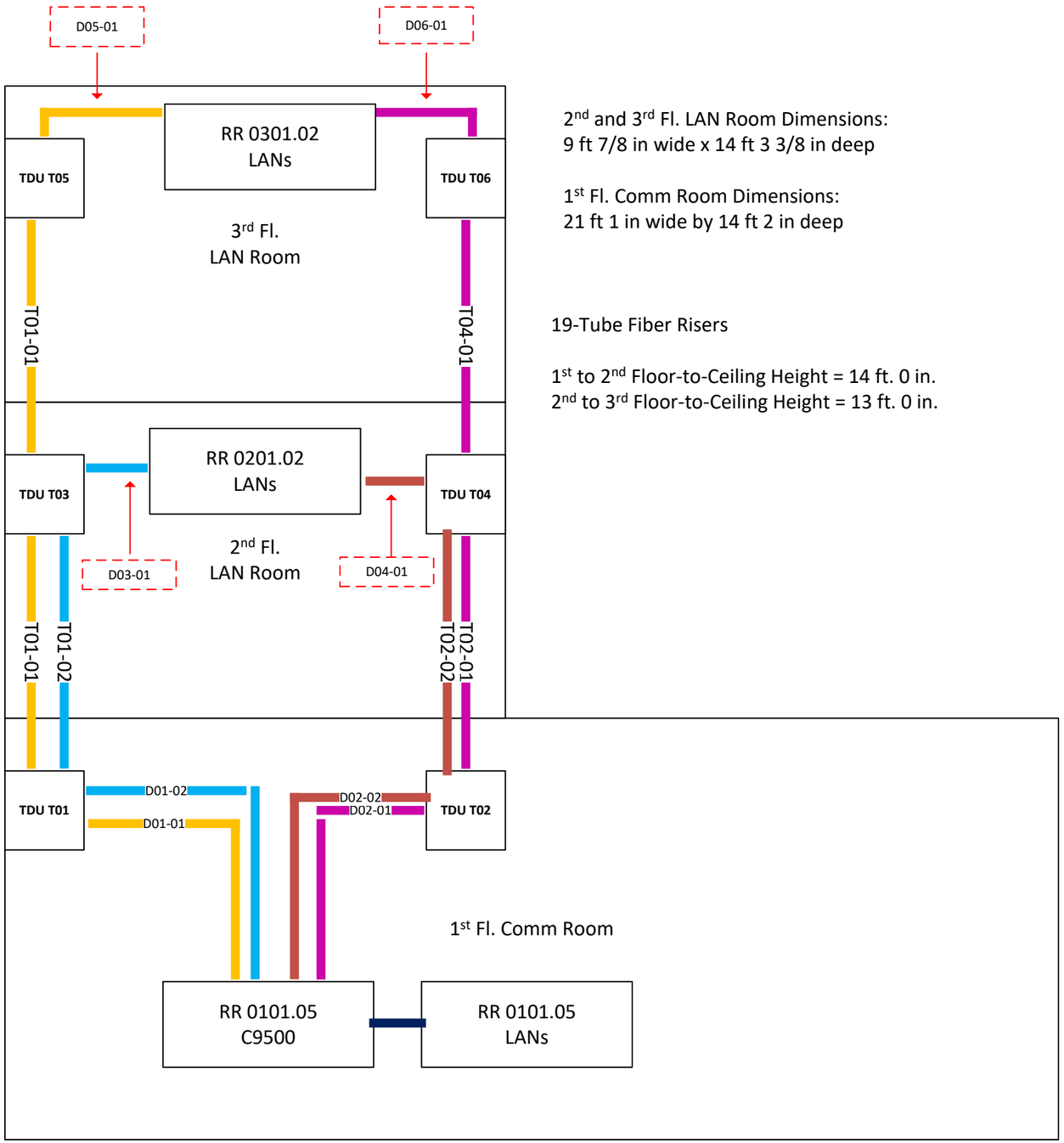

2nd and 3rd Fl. LAN Room Dimensions:
9 ft 7/8 in wide x 14 ft 3 3/8 in deep

1st Fl. Comm Room Dimensions:
21 ft 1 in wide by 14 ft 2 in deep

19-Tube Fiber Risers

1st to 2nd Floor-to-Ceiling Height = 14 ft. 0 in.
2nd to 3rd Floor-to-Ceiling Height = 13 ft. 0 in.

Direct Patch to C9500

Fiber Bundle FB1

Fiber Bundle FB2

Fiber Bundle FB3

Fiber Bundle FB4

D01 – D06 Tube Cables Between Cabling Racks and TDUs.

T01 – T04 – 19-Tube Fiber Riser

RR Relay Rack. Numbers Right to Left

REVISION NOTES		
REV: 1	DATE: -	REVISED BY: -
REV: 2	DATE: -	REVISED BY: -
REV: 3	DATE: -	REVISED BY: -
REV: 4	DATE: -	REVISED BY: -
REV: 5	DATE: -	REVISED BY: -
REV: 6	DATE: -	REVISED BY: -
REV: 7	DATE: -	REVISED BY: -
REV: 8	DATE: -	REVISED BY: -
REV: 9	DATE: -	REVISED BY: -
REV: 10	DATE: -	REVISED BY: -

conEdison
4 Irving Place
New York, N.Y. 10003
Tel: 212-460-4600 Fax: 212-982-7816

DEPARTMENT:
IT Communications & Site Design (IT-CISD)

NETWORK ENGINEER:
NETWORK ENG. TEL No.
PROJECT MANAGER -
PROJECT MGR. TEL No. -

SITE LOCATION:
R900 – Spring Valley Operations Center Building Expansion

WORK DESCRIPTION:

JOB NUMBER:
DRAWN BY: Ron Devito
SCALE: N.T.S.
DATE: 03/11/2025
REVISION No. REV 1
FILE NAME: -
DRAWING TYPE: -
SHEET: 1 OF 3

ATTACHMENT 05 – C9500 Backbone Connections

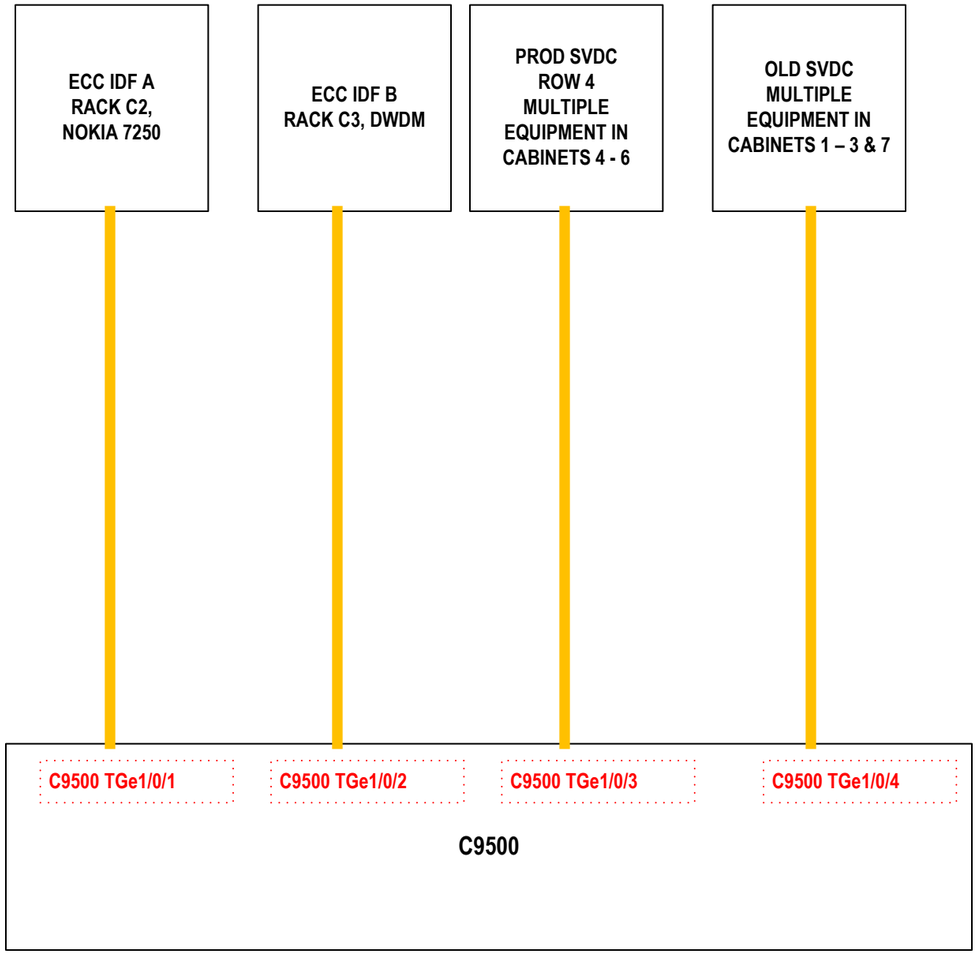

LEGEND

C9500 Fiber Circuit Connection

REVISION NOTES

REV: 1	DATE: -	REVISED BY: -
REV: 2	DATE: -	REVISED BY: -
REV: 3	DATE: -	REVISED BY: -
REV: 4	DATE: -	REVISED BY: -
REV: 5	DATE: -	REVISED BY: -
REV: 6	DATE: -	REVISED BY: -
REV: 7	DATE: -	REVISED BY: -
REV: 8	DATE: -	REVISED BY: -
REV: 9	DATE: -	REVISED BY: -
REV: 10	DATE: -	REVISED BY: -

conEdison
4 Irving Place
New York, N.Y. 10003
Tel: 212-460-4600 Fax: 212-982-7816

DEPARTMENT:
IT Communications & Site Design (IT-CISD)

NETWORK ENGINEER:

NETWORK ENG. TEL No.

PROJECT MANAGER
-

PROJECT MGR. TEL No.
-

SITE LOCATION:
R900 – Spring Valley Operations Center Building Expansion

WORK DESCRIPTION:

JOB NUMBER:

DRAWN BY: Ron Devito

SCALE: N.T.S.

DATE: 03/11/2025

REVISION No. REV 1

FILE NAME:
-

DRAWING TYPE:
-

SHEET: 2 OF 3

ATTACHMENT 05 – CCTN Fiber Tie Routes

T05 – T08
19-Tube CCTN Fiber Ties

- T-05
- T-06
- T-07
- T-08

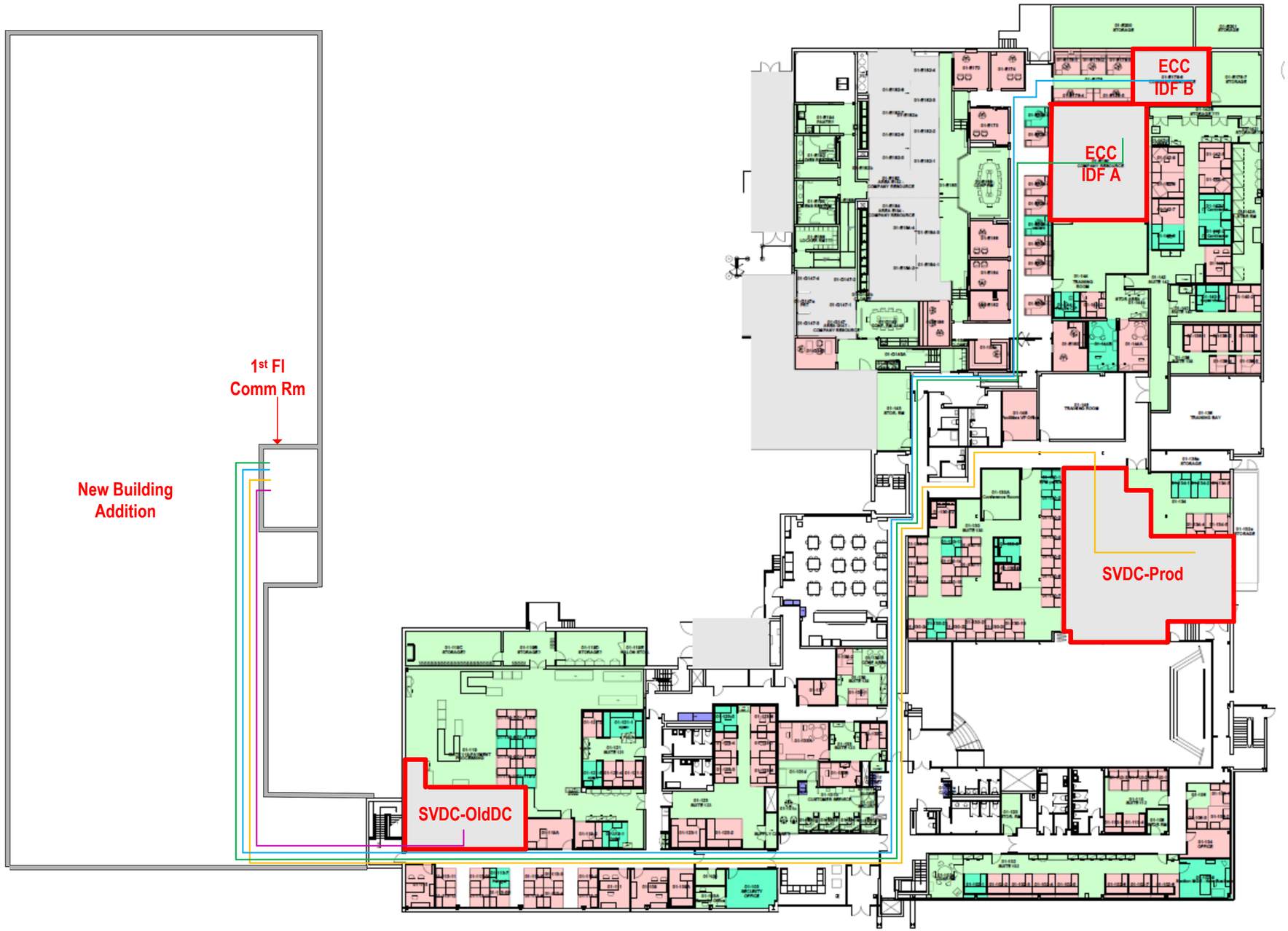

REVISION NOTES		
REV: 1	DATE: -	REVISED BY: -
REV: 2	DATE: -	REVISED BY: -
REV: 3	DATE: -	REVISED BY: -
REV: 4	DATE: -	REVISED BY: -
REV: 5	DATE: -	REVISED BY: -
REV: 6	DATE: -	REVISED BY: -
REV: 7	DATE: -	REVISED BY: -
REV: 8	DATE: -	REVISED BY: -
REV: 9	DATE: -	REVISED BY: -
REV: 10	DATE: -	REVISED BY: -

conEdison
4 Irving Place
New York, N.Y. 10003
Tel: 212-460-4600 Fax: 212-982-7816

DEPARTMENT:
IT Communications & Site Design (IT-CISD)

NETWORK ENGINEER:

NETWORK ENG. TEL No.

PROJECT MANAGER
-

PROJECT MGR. TEL No.
-

SITE LOCATION:
R900 – Spring Valley Operations Center Building Expansion

WORK DESCRIPTION:

JOB NUMBER:		DRAWN BY: Ron Devito
SCALE: N.T.S.	DATE: 03/27/2025	REVISION No. REV 1
FILE NAME: -		
DRAWING TYPE: -		SHEET: 3 OF 3

ATTACHMENT 06 – LAN FIBER TRAY LAYOUT AND LABELING

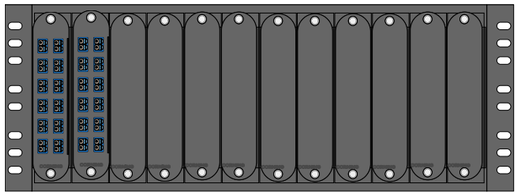

COL A: 24-STRAND SM FIBER INTERNAL RTE 1 TO 1st Fl Comm ROOM R4-T1-COL A
COL B: 24-STRAND SM FIBER INTERNAL RTE 2 TO 1st Fl Comm ROOM R4-T1-COL B

3RD Fl. LAN Room R2 T1

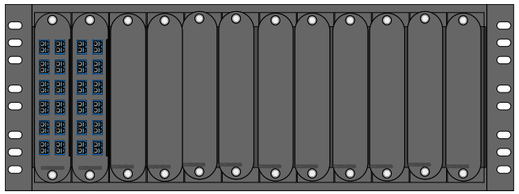

COL A: 24-STRAND SM FIBER INTERNAL RTE 1 TO 1st Fl Comm ROOM R4-T1-COL C
COL B: 24-STRAND SM FIBER INTERNAL RTE 2 TO 1st Fl Comm ROOM R4-T1-COL D

2nd Fl. LAN Room R2 T1

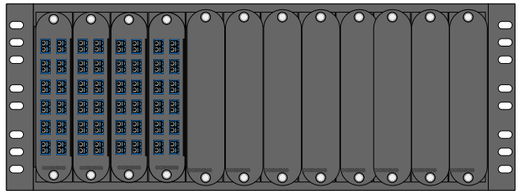

COL A: 24-STRAND SM FIBER INTERNAL RTE 1 TO 3rd Fl LAN ROOM R2-T1-COL A
COL B: 24-STRAND SM FIBER INTERNAL RTE 2 TO 3rd Fl LAN ROOM R2-T1-COL B
COL C: 24-STRAND SM FIBER INTERNAL RTE 1 TO 2nd Fl LAN ROOM R2-T1-COL A
COL D: 24-STRAND SM FIBER INTERNAL RTE 2 TO 2nd Fl LAN ROOM R2-T1-COL B

1st Fl. Comm Room R4 T1

REVISION NOTES

REV:	DATE:	REVISED BY:
1	-	-
2	-	-
3	-	-
4	-	-
5	-	-
6	-	-
7	-	-
8	-	-
9	-	-
10	-	-

conEdison
4 Irving Place
New York, N.Y. 10003
Tel: 212-460-4600 Fax: 212-982-7816

DEPARTMENT:
IT
Communications
&
Site Design
(IT-CISD)

NETWORK ENGINEER:
NETWORK ENG. TEL No.
PROJECT MANAGER -
PROJECT MGR. TEL No. -

SITE LOCATION:
R900 Spring Valley Operations Center Building Expansion

WORK DESCRIPTION:
Attachment 06 - Fiber Tray Layout and Labeling

JOB NUMBER:	DRAWN BY: Ron Devito	
SCALE: N.T.S.	DATE: 03/11/2025	REVISION No. REV 1
FILE NAME: -		
DRAWING TYPE: -		SHEET: 1 OF 4

ATTACHMENT 06 – CCTN FIBER TRAY LAYOUT AND LABELING

Sumitomo FutureFlex FT-9-288XFQX2U Fiber Tray																							
144 Strand Fiber Circuit												144 Strand Fiber Circuit											
72 Strands												72 Strands											
A	B	C	D	E	F	G	H	I	J	K	L	M	N	O	P	Q	R	S	T	U	V	W	X
1 - 12	13 - 24	25 - 36	37 - 48	49 - 60	61 - 72	73 - 84	85 - 96	97 - 108	109 - 120	121 - 132	133 - 144	1 - 12	13 - 24	25 - 36	37 - 48	49 - 60	61 - 72	73 - 84	85 - 96	97 - 108	109 - 120	121 - 132	133 - 144

COLS A-L: 72-STRAND SM FIBER TO ECC-IDF-A-RACK B2-TRAY-5-COLS A-X
COLS M-X: 72-STRAND SM FIBER TO SVDC-PROD-ROW-4-CABINET-1-TRAY-4-COLS A-X

1st Fl Comm Room R2 T1

Sumitomo FutureFlex FT-9-288XFQX2U Fiber Tray																							
144 Strand Fiber Circuit												144 Strand Fiber Circuit											
72 Strands												72 Strands											
A	B	C	D	E	F	G	H	I	J	K	L	M	N	O	P	Q	R	S	T	U	V	W	X
1 - 12	13 - 24	25 - 36	37 - 48	49 - 60	61 - 72	73 - 84	85 - 96	97 - 108	109 - 120	121 - 132	133 - 144	1 - 12	13 - 24	25 - 36	37 - 48	49 - 60	61 - 72	73 - 84	85 - 96	97 - 108	109 - 120	121 - 132	133 - 144

COLS A-L: 72-STRAND SM FIBER TO ECC-IDF-B-RACK-B1-TRAY-6-COLS A-X
COLS M-X: 72-STRAND SM FIBER TO SVDC-OLDDC-CABINET-5-TRAY-4-COLS A-X

1st Fl Comm Room R3 T1

REVISION NOTES

REV:	DATE:	REVISED BY:
1	-	-
2	-	-
3	-	-
4	-	-
5	-	-
6	-	-
7	-	-
8	-	-
9	-	-
10	-	-

conEdison
4 Irving Place
New York, N.Y. 10003
Tel: 212-460-4600 Fax: 212-982-7816

DEPARTMENT:
IT
Communications
&
Site Design
(IT-CISD)

NETWORK ENGINEER:
NETWORK ENG. TEL No.
PROJECT MANAGER -
PROJECT MGR. TEL No. -

SITE LOCATION:
R900 Spring Valley Operations Center
Building Expansion

WORK DESCRIPTION:
Attachment 06 - Fiber Tray Layout and Labeling

JOB NUMBER:	DRAWN BY: Ron Devito	
SCALE: N.T.S.	DATE: 04/07/2025	REVISION No. REV 2
FILE NAME: -		
DRAWING TYPE: -		SHEET: 2 OF 4

ATTACHMENT 06 – CCTN FIBER TRAY LAYOUT AND LABELING

Sumitomo FutureFlex FT-9-144XFQX1U Fiber Tray																							
144 Strand Fiber Circuit																							
72 Strands												72 Strands											
A	B	C	D	E	F	G	H	I	J	K	L	M	N	O	P	Q	R	S	T	U	V	W	X
01 - 06	07 - 12	13 - 18	19 - 24	25 - 30	31 - 36	37 - 42	43 - 48	49 - 54	55 - 60	61 - 66	67 - 72	73 - 78	79 - 84	85 - 90	91 - 96	97 - 102	103 - 108	109 - 114	115 - 120	121 - 126	127 - 132	133 - 138	139 - 144

COLS A-X: 72-STRAND SM FIBER TO NEW BLDG 1ST FL COMM ROOM R2-T1-COLS A-L

ECC IDF A RACK B2 TRAY 5

Sumitomo FutureFlex FT-9-144XFQX1U Fiber Tray																							
144 Strand Fiber Circuit																							
72 Strands												72 Strands											
A	B	C	D	E	F	G	H	I	J	K	L	M	N	O	P	Q	R	S	T	U	V	W	X
01 - 06	07 - 12	13 - 18	19 - 24	25 - 30	31 - 36	37 - 42	43 - 48	49 - 54	55 - 60	61 - 66	67 - 72	73 - 78	79 - 84	85 - 90	91 - 96	97 - 102	103 - 108	109 - 114	115 - 120	121 - 126	127 - 132	133 - 138	139 - 144

COLS A-X: 48-STRAND SM FIBER TO NEW BLDG 1ST FL COMM ROOM R3-T1-COLS A-L

ECC IDF B RACK B1 TRAY 6

REVISION NOTES

REV:	DATE:	REVISED BY:
1	-	-
2	-	-
3	-	-
4	-	-
5	-	-
6	-	-
7	-	-
8	-	-
9	-	-
10	-	-

conEdison
4 Irving Place
New York, N.Y. 10003
Tel: 212-460-4600 Fax: 212-982-7816

DEPARTMENT:
IT
Communications
&
Site Design
(IT-CISD)

NETWORK ENGINEER:
NETWORK ENG. TEL No.
PROJECT MANAGER -
PROJECT MGR. TEL No. -

SITE LOCATION:
R900 Spring Valley Operations Center
Building Expansion

WORK DESCRIPTION:
Attachment 06 - Fiber Tray Layout and Labeling

JOB NUMBER:	DRAWN BY: Ron Devito	
SCALE: N.T.S.	DATE: 04/07/2025	REVISION No. REV 2
FILE NAME: -		
DRAWING TYPE: -		SHEET: 3 OF 4

ATTACHMENT 06 – CCTN FIBER TRAY LAYOUT AND LABELING

Sumitomo FutureFlex FT-9-144XFQX1U Fiber Tray																							
72 Strands												72 Strands											
A	B	C	D	E	F	G	H	I	J	K	L	M	N	O	P	Q	R	S	T	U	V	W	X
01 - 06	07 - 12	13 - 18	19 - 24	25 - 30	31 - 36	37 - 42	43 - 48	49 - 54	55 - 60	61 - 66	67 - 72	73 - 78	79 - 84	85 - 90	91 - 96	97 - 102	103 - 108	109 - 114	115 - 120	121 - 126	127 - 132	133 - 138	139 - 144

COLS A-X: 72-STRAND SM TO NEW BLDG 1ST FL COMM ROOM R2-T1-COLS M-X

SVDC PROD ROW 4, CABINET 1 TRAY 4

Sumitomo FutureFlex FT-9-144XFQX1U Fiber Tray																							
144 Strand Fiber Circuit																							
72 Strands												72 Strands											
A	B	C	D	E	F	G	H	I	J	K	L	M	N	O	P	Q	R	S	T	U	V	W	X
01 - 06	07 - 12	13 - 18	19 - 24	25 - 30	31 - 36	37 - 42	43 - 48	49 - 54	55 - 60	61 - 66	67 - 72	73 - 78	79 - 84	85 - 90	91 - 96	97 - 102	103 - 108	109 - 114	115 - 120	121 - 126	127 - 132	133 - 138	139 - 144

COLS A-X: 48-STRAND SM FIBER TO NEW BLDG 1ST FL COMM ROOM R3-T1-COLS M-X

SVDC OLD DATA CENTER CABINET 5 TRAY 4

REVISION NOTES

REV:	DATE:	REVISED BY:
1	-	-
2	-	-
3	-	-
4	-	-
5	-	-
6	-	-
7	-	-
8	-	-
9	-	-
10	-	-

conEdison

4 Irving Place
New York, N.Y. 10003
Tel: 212-460-4600 Fax: 212-982-7816

DEPARTMENT:

IT Communications & Site Design (IT-CISD)

NETWORK ENGINEER:

NETWORK ENG. TEL No.

PROJECT MANAGER: -

PROJECT MGR. TEL No.: -

SITE LOCATION:

R900 Spring Valley Operations Center Building Expansion

WORK DESCRIPTION:
Attachment 06 - Fiber Tray Layout and Labeling

JOB NUMBER:	DRAWN BY: Ron Devito	
SCALE: N.T.S.	DATE: 04/07/2025	REVISION No. REV 2
FILE NAME: -		
DRAWING TYPE: -		SHEET: 4 OF 4

ABF TUBE CABLE MASTER

ATTACHMENT 07: AIR BLOWN FIBER TUBE CABLE PLANT

MASTER LIST #	TUBE CABLE ID	FROM	TO	CABLE TYPE	CABLE ROUTING	STATUS
N/A	D-01	1st Fl. Comm Rm (LAN Cable Rack)	1st Fl. Comm Rm TDU (COMMRM-TDU-T01)	19-TUBE PLENUM JACKETED	1st Fl. Comm Rm CABLE LADDER SYSTEM	Planned
N/A	T-01	1st Fl. Comm Rm TDU (COMMRM-TDU-T01)	2nd Fl. LAN Room TDU (2FL-LAN-TDU-T03)	19-TUBE PLENUM JACKETED	COMMRM-TDU-T01, C0001, 2FL-LAN-TDU-T03	Planned
NA	D-02	1st Fl. Comm Rm (LAN Cable Rack)	1st Fl. Comm Rm TDU (COMMRM-TDU-T02)	19-TUBE PLENUM JACKETED	1st Fl. Comm Rm CABLE LADDER SYSTEM	Planned
N/A	T-02	1st Fl. Comm Rm TDU (COMMRM-TDU-T02)	2nd Fl. LAN Room TDU (2Fl-LAN-TDU-T04)	19-TUBE PLENUM JACKETED	COMM-RM-TDU-T02, C0002, 2FL-LAN-TDU-T04	Planned
N/A	D-03	2nd Fl. LAN Rm (LAN Cable Rack)	2nd Fl. LAN Rm TDU (2FL-LAN-TDU-T03)	19-TUBE PLENUM JACKETED	2nd Fl. LAN Rm CABLE LADDER SYSTEM	Planned
N/A	T-03	2nd Fl. LAN Rm TDU (2FL-LAN-TDU-T03)	3rd Fl. LAN Rm TDU (3FL-LAN-TDU-T05)	19-TUBE PLENUM JACKETED	2FL-LAN-TDU-T03, C0003, 3FL-LAN-TDU-T05	Planned
NA	D-04	2nd Fl. LAN Rm (LAN Cable Rack)	2nd Fl. LAN Rm TDU (2FL-LAN-TDU-T04)	19-TUBE PLENUM JACKETED	2nd Fl. LAN Rm CABLE LADDER SYSTEM	Planned
N/A	T-04	2nd Fl. LAN Rm TDU (2FL-LAN-TDU-T04)	3rd Fl. LAN Rm TDU (3FL-LAN-TDU-T06)	19-TUBE PLENUM JACKETED	2FL-LAN-TDU-T04, C0004, 3FL-LAN-TDU-T06	Planned
NA	D-05	3rd Fl. LAN Rm (LAN Cable Rack)	3rd Fl. LAN Rm TDU (3FL-LAN-TDU-T05)	19-TUBE PLENUM JACKETED	3rd Fl. LAN Rm CABLE LADDER SYSTEM	Planned
NA	D-06	3rd Fl. LAN Rm (LAN Cable Rack)	3rd Fl. LAN Rm TDU (3FL-LAN-TDU-T06)	19-TUBE PLENUM JACKETED	3rd Fl. LAN Rm CABLE LADDER SYSTEM	Planned
N/A	D-07	1st Fl. Comm Rm (CCTN Rack 1)	1st Fl. Comm Rm TDU (COMMRM-TDU-T01)	19-TUBE PLENUM JACKETED	1st Fl. Comm Rm CABLE LADDER SYSTEM	Planned
NA	T05	1st Fl. Comm Rm TDU (COMMRM-TDU-T01)	ECC IDF A (ECC-IDF-A-RACK-B2-TRAY-5)	19-TUBE PLENUM JACKETED	COMM-RM-TDU-T01, CCTN EZ-Path, ECC IDF A	Planned
N/A	D-08	1st Fl. Comm Rm (CCTN Rack 2)	1st Fl. Comm Rm TDU (COMMRM-TDU-T02)	19-TUBE PLENUM JACKETED	1st Fl. Comm Rm CABLE LADDER SYSTEM	Planned
N/A	T-06	1st Fl. Comm Rm TDU (COMMRM-TDU-T02)	ECC IDF B (ECC-IDF-B-RACK-B1-TRAY-6)	19-TUBE PLENUM JACKETED	COMM-RM-TDU-T02, CCTN EZ-Path, ECC IDF B	Planned
N/A	D-09	1st Fl. Comm Rm (CCTN Rack 1)	1st Fl. Comm Rm TDU (COMMRM-TDU-T01)	19-TUBE PLENUM JACKETED	1st Fl. Comm Rm CABLE LADDER SYSTEM	Planned
NA	T-07	1st Fl. Comm Rm TDU (COMMRM-TDU-T01)	SVDC PROD ROW 4 (SVDC-PROD-ROW-4-CABINET-1-TRAY-4)	19-TUBE PLENUM JACKETED	COMM-RM-TDU-T01, CCTN EZ-Path, SVDC PROD ROW 4	Planned
N/A	D-10	1st Fl. Comm Rm (CCTN Rack 2)	1st Fl. Comm Rm TDU (COMMRM-TDU-T02)	19-TUBE PLENUM JACKETED	1st Fl. Comm Rm CABLE LADDER SYSTEM	Planned
NA	T-08	1st Fl. Comm Rm TDU (COMMRM-TDU-T02)	SVDC OLDDC (SVDC-OLD-DATA-CENTER-CABINET-5-TRAY-4)	19-TUBE PLENUM JACKETED	COMM-RM-TDU-T02, CCTN EZ-Path, SVDC OLDDC	Planned

INTERNAL

ABF MASTER BUNDLE

ATTACHMENT 7: AIR BLOWN FIBER BUNDLE PLANT

MASTER LIST #	FIBER BUNDLE ID	FROM	TO	BUNDLE TYPE	BUNDLE ROUTING	Estimated LENGTH	STATUS
N/A	FB1	1ST FL COMM RM CABLE RACK	3RD FL LAN RM CABLE RACK	SINGLEMODE, 24-STRAND LC	LAN CABLE RACK, T1, SLOT A, D-01 (MICRODUCT 1), T-01 (MICRODUCT 1), D-05 (MICRODUCT 1) LAN CABLE RACK, T1, SLOT A	100	Planned
N/A	FB2	1ST FL COMM RM CABLE RACK	3RD FL LAN RM CABLE RACK	SINGLEMODE, 24-STRAND LC	LAN CABLE RACK, T1, SLOT B, D-02 (MICRODUCT 1), T-02 (MICRODUCT 1), D-06 (MICRODUCT 1) LAN CABLE RACK, T1, SLOT B	100	Planned
N/A	FB3	1ST FL COMM RM CABLE RACK	2ND FL LAN RM CABLE RACK	SINGLEMODE, 24-STRAND LC	LAN CABLE RACK, T1, SLOT C, D-01 (MICRODUCT 2), T-01 (MICRODUCT 2), D-03 (MICRODUCT 2) LAN CABLE RACK, T1, SLOT C	100	Planned
N/A	FB4	3RD FL LAN RM CABLE RACK	2ND FL LAN RM CABLE RACK	SINGLEMODE, 24-STRAND LC	LAN CABLE RACK, T1, SLOT D, D-06 (MICRODUCT 2), T-02 (MICRODUCT 2), D-04 (MICRODUCT 2) LAN CABLE RACK, T1, SLOT D	100	Planned
N/A	FB5	1ST FL COMM RM CCTN RACK 1	ECC IDF A	SINGLEMODE, 72-STRAND LC	CCTN RACK 1, T1, SLOTS A-F, D-07 (MICRODUCT 1), T-05 (MICRODUCT 1), ECC IDF A, RACK B2, TRAY 5, SLOTS A-L	TBD	Planned
N/A	FB6	1ST FL COMM RM CCTN RACK 1	ECC IDF A	SINGLEMODE, 72-STRAND LC	CCTN RACK 1, T1, SLOTS G-L, D-07 (MICRODUCT 2), T-05 (MICRODUCT 2), ECC IDF A, RACK B2, TRAY 5, SLOTS M-X	TBD	Planned
N/A	FB7	1ST FL COMM RM CCTN RACK 2	ECC IDF B	SINGLEMODE, 72-STRAND LC	CCTN RACK 2, T1, SLOTS A-F, D-08 (MICRODUCT 1), T-06 (MICRODUCT 1), ECC IDF B, RACK B1, TRAY 6, SLOTS A-L	TBD	Planned
N/A	FB8	1ST FL COMM RM CCTN RACK 2	ECC IDF B	SINGLEMODE, 72-STRAND LC	CCTN RACK 2, T1, SLOTS G-L, D-08 (MICRODUCT 2), T-06 (MICRODUCT 2), ECC IDF B, RACK B1, TRAY 6, SLOTS M-X	TBD	Planned
N/A	FB9	1ST FL COMM RM CCTN RACK 1	SVDC PROD ROW 4	SINGLEMODE, 72-STRAND LC	CCTN RACK 1, T1, SLOTS M-R, D-09 (MICRODUCT 1), T-07 (MICRODUCT 1), SVDC PROD ROW 4, CABINET 1, TRAY 4, SLOTS A-L	TBD	Planned
N/A	FB10	1ST FL COMM RM CCTN RACK 1	SVDC PROD ROW 4	SINGLEMODE, 72-STRAND LC	CCTN RACK 1, T1, SLOTS S-X, D-09 (MICRODUCT 2), T-07 (MICRODUCT 2), SVDC PROD ROW 4, CABINET 1, TRAY 4, SLOTS M-X	TBD	Planned
N/A	FB11	1ST FL COMM RM CCTN RACK 2	SVDC OLDDC	SINGLEMODE, 72-STRAND LC	CCTN RACK 2, T1, SLOTS M-R, D-10 (MICRODUCT 1), T-08 (MICRODUCT 1), SVDC OLDDC, CABINET 5, TRAY 4, SLOTS A-L	TBD	Planned
N/A	FB12	1ST FL COMM RM CCTN RACK 2	SVDC OLDDC	SINGLEMODE, 72-STRAND LC	CCTN RACK 2, T1, SLOTS S-X, D-10 (MICRODUCT 2), T-08 (MICRODUCT 2), SVDC OLDDC, CABINET 5, TRAY 4, SLOTS M-X	TBD	Planned

INTERNAL

Attachment 08: R900 - SVOC BUILDING EXPANSION ABF Documentation Matrix
TDU Sheet
Last Updated: 04/07/2025

Tube Cable Label Sample	Line 1 Line 2 Line 3	TDU-T01 South Wall of 1st Fl. Comm Rm. Installed by: [Contractor] on 04/07/2025

TDU #	Location	Installed by	Job #	Date
COMMRM-TDU-T01	South Wall of 1st Fl. Comm Rm.			
COMMRM-TDU-T02	North Wall of 1st Fl. Comm Rm.			
2FL-LAN-TDU-T03	South Wall of 2nd Fl. LAN Rm.			
2FL-LAN-TDU-T04	North Wall of 2nd Fl. LAN Rm.			
3FL-LAN-TDU-T05	South Wall of 3rd Fl. LAN Rm.			
3FL-LAN-TDU-T06	North Wall of 3rd Fl. LAN Rm.			

INTERNAL

Attachment 08: R900 - Spring Valley Operations Center Bldg. Expansion ABF Documentation Matrix
Tube Trunk Sheet
Last Updated: 04/07/2025

Tube Cable Label Sample	Line 1 Line 2 Line 3 Line 4	T1 TDU-T01 to TDU-T03 TC19TP2 Installed by: [Contractor] on 03/27/2025

Trunk #	End #1	End #2	Cable Type	Tube Count	Trunk Length	Installed By	Job #	Date	Comments
D01	COMMRM 0101.05	COMMRM-TDU-T01	TC19TP2	19					1st Fl. Comm Rm CABLE LADDER SYSTEM
T01	COMMRM-TDU-T01	2FL-LAN-TDU-T03	TC19TP2	19					COMMRM-TDU-T01, C0001, 2FL-LAN-TDU-T03
D-02	COMMRM 0101.05	COMMRM-TDU-T02	TC19TP2	19					1st Fl. Comm Rm CABLE LADDER SYSTEM
T-02	COMMRM-TDU-T02	2FL-LAN-TDU-T04	TC19TP2	19					COMM-RM-TDU-T02, C0002, 2FL-LAN-TDU-T04
D-03	2FL-LAN 0201.02	2FL-LAN-TDU-T03	TC19TP2	19					2nd Fl. LAN Rm CABLE LADDER SYSTEM
T-03	2FL-LAN-TDU-T03	3FL-LAN-TDU-T05	TC19TP2	19					2FL-LAN-TDU-T03, C0003, 3FL-LAN-TDU-T05
D-04	2FL-LAN 0201.02	2FL-LAN-TDU-T04	TC19TP2	19					2nd Fl. LAN Rm CABLE LADDER SYSTEM
T-04	2FL-LAN-TDU-T04	3FL-LAN-TDU-T06	TC19TP2	19					2FL-LAN-TDU-T04, C0004, 3FL-LAN-TDU-T06
D-05	3FL-LAN 0301.02	3FL-LAN-TDU-T05	TC19TP2	19					3rd Fl. LAN Rm CABLE LADDER SYSTEM
D-06	3FL-LAN 0301.02	3FL-LAN-TDU-T06	TC19TP2	19					3rd Fl. LAN Rm CABLE LADDER SYSTEM
D-07	COMMRM 0101.02	COMMRM-TDU-T01	TC19TP2	19					1st Fl. Comm Rm CABLE LADDER SYSTEM
T05	COMMRM-TDU-T01	ECC-IDF-A-RACK-B2-TRAY-5	TC19TP2	19					COMMRM-TDU-T01, CCTN EZ-Path, ECC-IDF-A, RACK B2, TRAY 5
D-08	COMMRM 0101.03	COMMRM-TDU-T02	TC19TP2	19					1st Fl. Comm Rm CABLE LADDER SYSTEM
T-06	COMMRM-TDU-T02	ECC-IDF-B-RACK-B1-TRAY-6	TC19TP2	19					COMM-RM-TDU-T02, CCTN EZ-Path, ECC-IDF-B, RACK B1 TRAY 6
D-09	COMMRM 0101.02	COMMRM-TDU-T01	TC19TP2	19					1st Fl. Comm Rm CABLE LADDER SYSTEM
T-07	COMMRM-TDU-T01	SVDC-PROD-ROW-4-CABINET-1-TRAY-4	TC19TP2	19					COMMRM-TDU-T01, CCTN EZ-Path, SVDC-PROD-ROW-4, CABINET 1, TRAY 4
D-10	COMMRM 0101.03	COMMRM-TDU-T02	TC19TP2	19					1st Fl. Comm Rm CABLE LADDER SYSTEM
T-08	COMMRM-TDU-T02	SVDC-OLD-DC-CABINET-5-TRAY-4	TC19TP2	19					COMMRM-TDU-T02, CCTN EZ-Path, SVDC-OLDDC, CABINET 5, TRAY 4

Printed: at

INTERNAL

Attachment 08: R900 - Spring Valley Operations Center Building Expansion ABF Documentation Matrix
Fiber Bundle Sheet
Last Updated: 03/27/2025

Legends

TCS	Tube Cable Segment
FB	Fiber Bundle
TU	Tube
COMMRM	1st Fl. Comm Room
2FL-LAN	2nd Fl. LAN Room
3FL-LAN	3rd FL. LAN Romm
ECC IDFA	Electric Control Center IDF A
ECC IDFB	Electric Control Center IDF B
SVDC Prod	Spring Valley Data Center - Production
Old SVDC	Old Spring Valley Data Center

Tube Cable Label Sample		
	Line 1	FB1
	Line 2	COMMRM RTE 1 to 3FL-LAN
	Line 3	Installed by: ABC on 04/07/2025

Fiber Bundle #	Fiber Type	Strand Count	Bundle Length	Installed By	Job #	Date	End #1	End #2	Tube Section #1 (Cable#-Tube#)	Tube Segment #2 (Cable#-Tube#)	Tube Segment #3 (Cable#-Tube#)	Tube Segment #4 (Cable#-Tube#)	Tube Segment #5 (Cable#-Tube#)
FB1	Single-Mode	24					COMMRM Cable-Rk	3FL-LAN Cable-Rk	D-01-1	T-01-1	T-03-1	D-05-01	
FB2	Single-Mode	24					COMMRM Cable-Rk	3FL-LAN Cable-Rk	D-02-1	T-02-1	T-04-1	D-06-01	
FB3	Single-Mode	24					COMMRM Cable-Rk	2FL-LAN Cable-Rk	D-01-2	T-01-2	T-03-2	D-03-1	
FB4	Single-Mode	24					3FL-LAN Cable-Rk	2FL-LAN Cable-Rk	D-06-1	T-04-2	D-04-1		
FB5	Single-Mode	72					COMMRM CCTN-Rk 1	ECC IDFA RACK B2, TRAY 5	D-07-01	T-05-1			
FB6	Single-Mode	72					COMMRM CCTN-Rk 1	ECC IDFA RACK B2, TRAY 5	D-07-02	T-05-2			
FB7	Single-Mode	72					COMMRM CCTN-Rk 2	ECC IDFB RACK B1, TRAY 6	D-08-01	T-06-01			
FB8	Single-Mode	72					COMMRM CCTN-Rk 2	ECC IDFB RACK B1, TRAY 6	D-08-02	T-06-02			
FB9	Single-Mode	72					COMMRM CCTN-Rk 1	SVDC Prod Row 4, CABINET 1 TRAY 4	D-09-01	T-07-01			
FB10	Single-Mode	72					COMMRM CCTN-Rk 1	SVDC Prod Row 4, CABINET 1 TRAY 4	D-09-02	T-07-02			
FB11	Single-Mode	72					COMMRM CCTN-Rk 2	Old SVDC, CABINET 5, TRAY 4	D-10-01	T-08-01			
FB12	Single-Mode	72					COMMRM CCTN-Rk 2	Old SVDC, CABINET 5, TRAY 4	D-10-02	T-08-02			

INTERNAL

Printed: at

Attachment 08: R900 - Spring Valley Operations Center Bldg Expansion
ABF Documentation Matrix
Tube Utilization Sheet
Last Updated: 04/07/2025

Tube cable #	Tube #	Fiber Bundle #
T-01	1	FB1
T-01	2	FB3
T-01	3	
T-01	4	
T-01	5	
T-01	6	
T-01	7	
T-01	8	
T-01	9	
T-01	10	
T-01	11	
T-01	12	
T-01	13	
T-01	14	
T-01	15	
T-01	16	
T-01	17	
T-01	18	
T-01	19	
D-01	1	FB1
D-01	2	FB3
D-01	3	
D-01	4	
D-01	5	
D-01	6	
D-01	7	
D-01	8	
D-01	9	
D-01	10	
D-01	11	
D-01	12	
D-01	13	
D-01	14	
D-01	15	
D-01	16	
D-01	17	
D-01	18	
D-01	19	
T-02	1	FB2
T-02	2	FB4
T-02	3	
T-02	4	
T-02	5	
T-02	6	
T-02	7	
T-02	8	
T-02	9	

INTERNAL

Attachment 08: R900 - Spring Valley Operations Center Bldg Expansion
ABF Documentation Matrix
Tube Utilization Sheet
Last Updated: 04/07/2025

Tube cable #	Tube #	Fiber Bundle #
T-02	10	
T-02	11	
T-02	12	
T-02	13	
T-02	14	
T-02	15	
T-02	16	
T-02	17	
T-02	18	
T-02	19	
D-02	1	FB2
D-02	2	FB4
D-02	3	
D-02	4	
D-02	5	
D-02	6	
D-02	7	
D-02	8	
D-02	9	
D-02	10	
D-02	11	
D-02	12	
D-02	13	
D-02	14	
D-02	15	
D-02	16	
D-02	17	
D-02	18	
D-02	19	
T-03	1	FB1
T-03	2	
T-03	3	
T-03	4	
T-03	5	
T-03	6	
T-03	7	
T-03	8	
T-03	9	
T-03	10	
T-03	11	
T-03	12	
T-03	13	
T-03	14	
T-03	15	
T-03	16	
T-03	17	
T-03	18	

INTERNAL

Attachment 08: R900 - Spring Valley Operations Center Bldg Expansion
ABF Documentation Matrix
Tube Utilization Sheet
Last Updated: 04/07/2025

Tube cable #	Tube #	Fiber Bundle #
T-03	19	
D-03	1	FB3
D-03	2	
D-03	3	
D-03	4	
D-03	5	
D-03	6	
D-03	7	
D-03	8	
D-03	9	
D-03	10	
D-03	11	
D-03	12	
D-03	13	
D-03	14	
D-03	15	
D-03	16	
D-03	17	
D-03	18	
D-03	19	
T-04	1	FB2
T-04	2	
T-04	3	
T-04	4	
T-04	5	
T-04	6	
T-04	7	
T-04	8	
T-04	9	
T-04	10	
T-04	11	
T-04	12	
T-04	13	
T-04	14	
T-04	15	
T-04	16	
T-04	17	
T-04	18	
T-04	19	
D-04	1	FB4
D-04	2	
D-04	3	
D-04	4	
D-04	5	
D-04	6	
D-04	7	
D-04	8	

INTERNAL

Tube cable #	Tube #	Fiber Bundle #
D-04	9	
D-04	10	
D-04	11	
D-04	12	
D-04	13	
D-04	14	
D-04	15	
D-04	16	
D-04	17	
D-04	18	
D-04	19	
D-05	1	FB1
D-05	2	
D-05	3	
D-05	4	
D-05	5	
D-05	6	
D-05	7	
D-05	8	
D-05	9	
D-05	10	
D-05	11	
D-05	12	
D-05	13	
D-05	14	
D-05	15	
D-05	16	
D-05	17	
D-05	18	
D-05	19	
D-06	1	FB2
D-06	2	
D-06	3	
D-06	4	
D-06	5	
D-06	6	
D-06	7	
D-06	8	
D-06	9	
D-06	10	
D-06	11	
D-06	12	
D-06	13	
D-06	14	
D-06	15	
D-06	16	
D-06	17	

Attachment 08: R900 - Spring Valley Operations Center Bldg Expansion
ABF Documentation Matrix
Tube Utilization Sheet
Last Updated: 04/07/2025

Tube cable #	Tube #	Fiber Bundle #
D-06	18	
D-06	19	
D-07	1	FB5
D-07	2	FB6
D-07	3	
D-07	4	
D-07	5	
D-07	6	
D-07	7	
D-07	8	
D-07	9	
D-07	10	
D-07	11	
D-07	12	
D-07	13	
D-07	14	
D-07	15	
D-07	16	
D-07	17	
D-07	18	
D-07	19	
T-05	1	FB5
T-05	2	FB6
T-05	3	
T-05	4	
T-05	5	
T-05	6	
T-05	7	
T-05	8	
T-05	9	
T-05	10	
T-05	11	
T-05	12	
T-05	13	
T-05	14	
T-05	15	
T-05	16	
T-05	17	
T-05	18	
T-05	19	
D-08	1	FB7
D-08	2	FB8
D-08	3	
D-08	4	
D-08	5	
D-08	6	
D-08	7	

INTERNAL

Tube cable #	Tube #	Fiber Bundle #
D-08	8	
D-08	9	
D-08	10	
D-08	11	
D-08	12	
D-08	13	
D-08	14	
D-08	15	
D-08	16	
D-08	17	
D-08	18	
D-08	19	
T-06	1	FB7
T-06	2	FB8
T-06	3	
T-06	4	
T-06	5	
T-06	6	
T-06	7	
T-06	8	
T-06	9	
T-06	10	
T-06	11	
T-06	12	
T-06	13	
T-06	14	
T-06	15	
T-06	16	
T-06	17	
T-06	18	
T-06	19	
D-09	1	FB9
D-09	2	FB10
D-09	3	
D-09	4	
D-09	5	
D-09	6	
D-09	7	
D-09	8	
D-09	9	
D-09	10	
D-09	11	
D-09	12	
D-09	13	
D-09	14	
D-09	15	
D-09	16	

Attachment 08: R900 - Spring Valley Operations Center Bldg Expansion
ABF Documentation Matrix
Tube Utilization Sheet
Last Updated: 04/07/2025

Tube cable #	Tube #	Fiber Bundle #
D-09	17	
D-09	18	
D-09	19	
T-07	1	FB9
T-07	2	FB10
T-07	3	
T-07	4	
T-07	5	
T-07	6	
T-07	7	
T-07	8	
T-07	9	
T-07	10	
T-07	11	
T-07	12	
T-07	13	
T-07	14	
T-07	15	
T-07	16	
T-07	17	
T-07	18	
T-07	19	
D-10	1	FB11
D-10	2	FB12
D-10	3	
D-10	4	
D-10	5	
D-10	6	
D-10	7	
D-10	8	
D-10	9	
D-10	10	
D-10	11	
D-10	12	
D-10	13	
D-10	14	
D-10	15	
D-10	16	
D-10	17	
D-10	18	
D-10	19	
T-08	1	FB11
T-08	2	FB12
T-08	3	
T-08	4	
T-08	5	
T-08	6	

INTERNAL

Attachment 08: R900 - Spring Valley Operations Center Bldg Expansion
ABF Documentation Matrix
Tube Utilization Sheet
Last Updated: 04/07/2025

Tube cable #	Tube #	Fiber Bundle #
T-08	7	
T-08	8	
T-08	9	
T-08	10	
T-08	11	
T-08	12	
T-08	13	
T-08	14	
T-08	15	
T-08	16	
T-08	17	
T-08	18	
T-08	19	

INTERNAL

ATTACHMENT 09 – R900 – 1ST FLOOR FEMTOCELL INSTALLATION

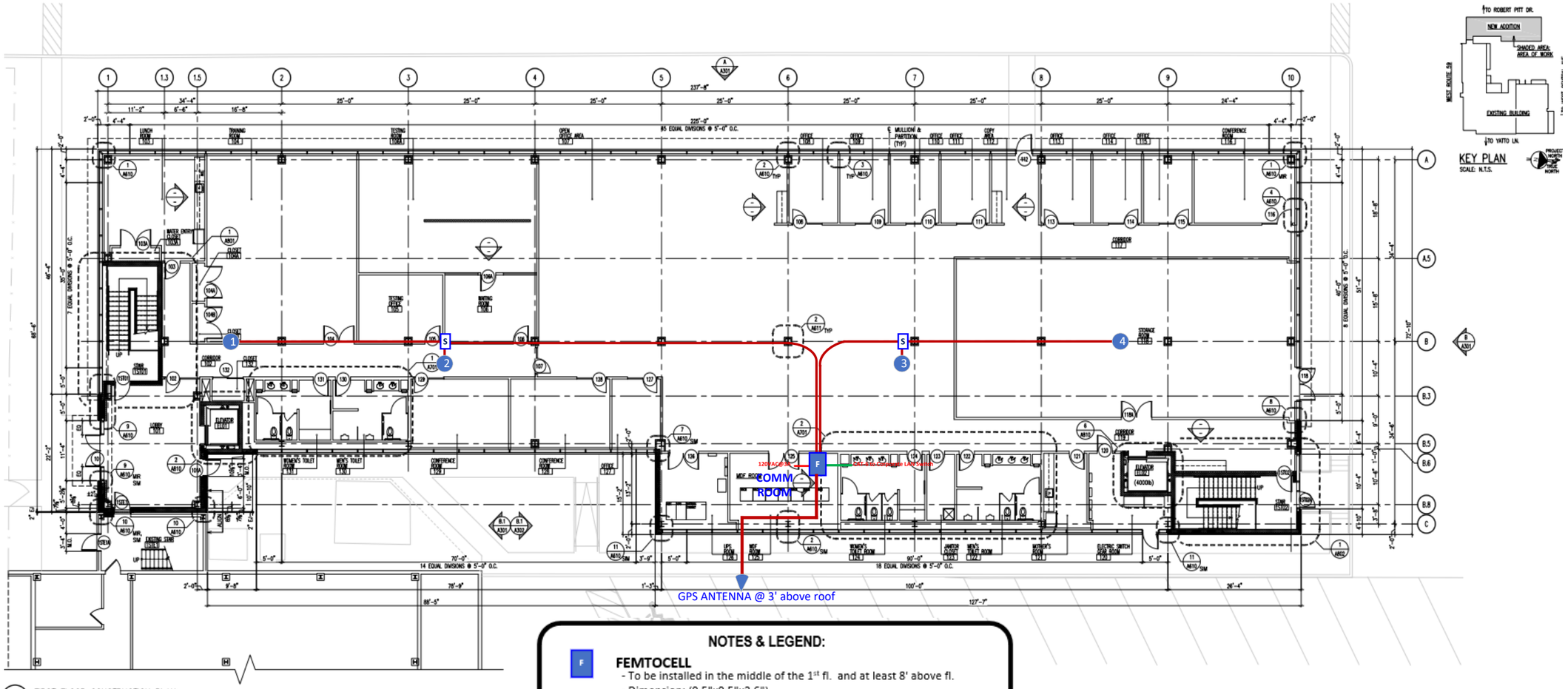

1 FIRST FLOOR CONSTRUCTION PLAN
SCALE: 1/8" = 1'-0"

NOTES & LEGEND:

FEMTOCELL
- To be installed in the middle of the 1st fl. and at least 8' above fl.
- Dimension: (9.5"x9.5"x2.6")
- Power requirement: 120VAC@3A

LDF4-50 RF CABLE
- LDF4-50 RF cable shortest run between Femtocell & GPS antenna on the roof and between Femtocell & internal antennas. Avoid sharp bends.

INTERNAL ANTENNA 1

INTERNAL ANTENNA 2

INTERNAL ANTENNA 3

INTERNAL ANTENNA 4

CAT-6 Duplex Drop
- nearest run to corporate network switch

RF SPLITTER

GPS ANTENNA

REVISION NOTES		
REV: 1	DATE: -	REVISED BY: -
REV: 2	DATE: -	REVISED BY: -
REV: 3	DATE: -	REVISED BY: -
REV: 4	DATE: -	REVISED BY: -
REV: 5	DATE: -	REVISED BY: -
REV: 6	DATE: -	REVISED BY: -
REV: 7	DATE: -	REVISED BY: -
REV: 8	DATE: -	REVISED BY: -
REV: 9	DATE: -	REVISED BY: -
REV: 10	DATE: -	REVISED BY: -

conEdison
4 Irving Place
New York, N.Y. 10003
Tel: 212-460-4600 Fax: 212-982-7816

DEPARTMENT:

IT Communications Infrastructure & Site Design (IT-CISD)

NETWORK ENGR.
Virgilio Veloso

NETWORK ENG. TEL No.

PROJECT MANAGER
-

PROJECT MGR. TEL No.
-

SITE LOCATION:
-
-
-

WORK DESCRIPTION:
SVOC Building Expansion
Femtocell Installation – Floor 1
-

JOB NUMBER:		DRAWN BY: Virgilio Veloso
SCALE: N.T.S.	DATE: 03/26/2025	REVISION No. 2
FILE NAME: -		
DRAWING TYPE: -		SHEET: 1 OF 4

ATTACHMENT – R900 – 2ND FLOOR FEMTOCELL INSTALLATION

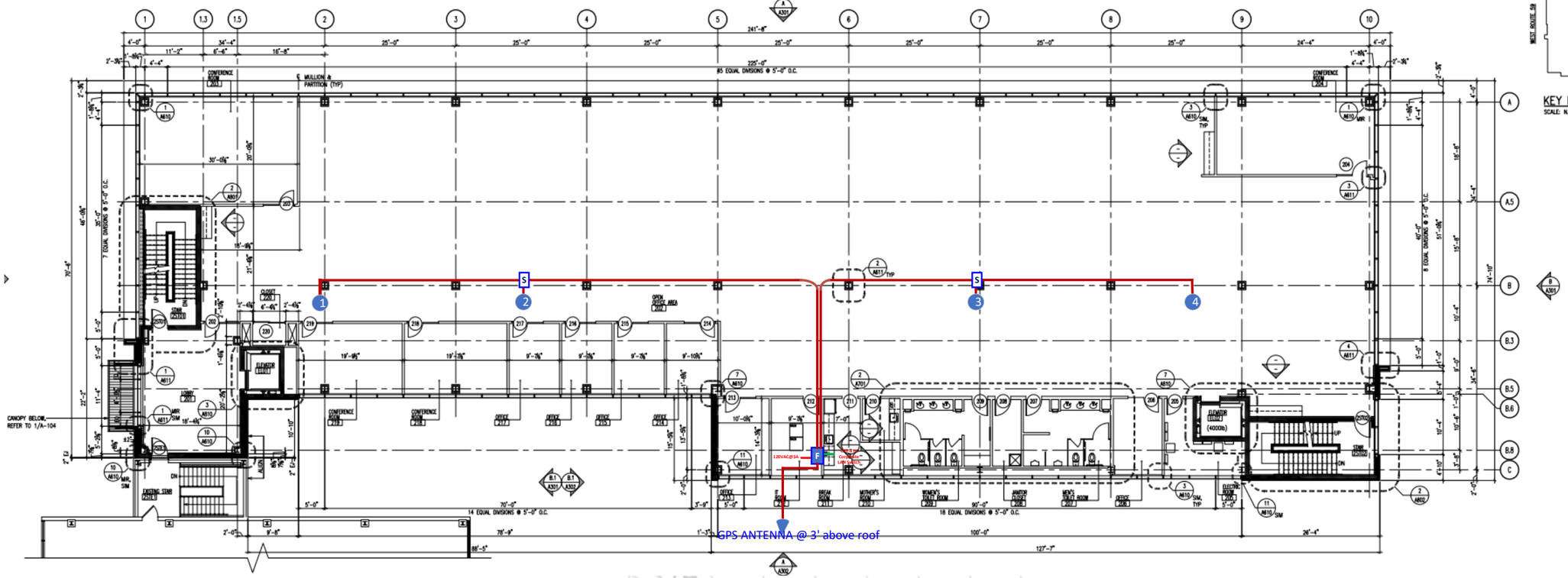

1 SECOND FLOOR CONSTRUCTION PLAN
SCALE: 1/8" = 1'-0"

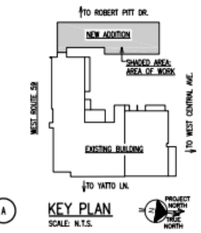

KEY PLAN
SCALE: N.T.S.

NOTES & LEGEND:

FEMTOCELL
- To be installed in the middle of the 1st fl. and at least 8' above fl.
- Dimension: (9.5"x9.5"x2.6")
- Power requirement: 120VAC@3A

LDF4-50 RF CABLE
- LDF4-50 RF cable shortest run between Femtocell & GPS antenna on the roof and between Femtocell & internal antennas. Avoid sharp bends.

1 **INTERNAL ANTENNA 1**

2 **INTERNAL ANTENNA 2**

3 **INTERNAL ANTENNA 3**

4 **INTERNAL ANTENNA 4**

CAT-6 Duplex Drop
- nearest run to corporate network switch

S **RF SPLITTER**

GPS ANTENNA

REVISION NOTES		
REV: 1	DATE: -	REVISED BY: -
REV: 2	DATE: -	REVISED BY: -
REV: 3	DATE: -	REVISED BY: -
REV: 4	DATE: -	REVISED BY: -
REV: 5	DATE: -	REVISED BY: -
REV: 6	DATE: -	REVISED BY: -
REV: 7	DATE: -	REVISED BY: -
REV: 8	DATE: -	REVISED BY: -
REV: 9	DATE: -	REVISED BY: -
REV: 10	DATE: -	REVISED BY: -

conEdison
4 Irving Place
New York, N.Y. 10003
Tel: 212-460-4600 Fax: 212-982-7816

DEPARTMENT:

IT Communications Infrastructure & Site Design (IT-CISD)

NETWORK ENGR.
Virgilio Veloso

NETWORK ENG. TEL No.

PROJECT MANAGER
-

PROJECT MGR. TEL No.
-

SITE LOCATION:
-
-
-

WORK DESCRIPTION:
SVOC Building Expansion
Femtocell Installation – Floor 2
-

JOB NUMBER:		DRAWN BY: Virgilio Veloso
SCALE: N.T.S.	DATE: 03/26/2025	REVISION No. 2
FILE NAME: -		
DRAWING TYPE: -		SHEET: 2 OF 4

ATTACHMENT – R900 – 3RD FLOOR FEMTOCELL INSTALLATION

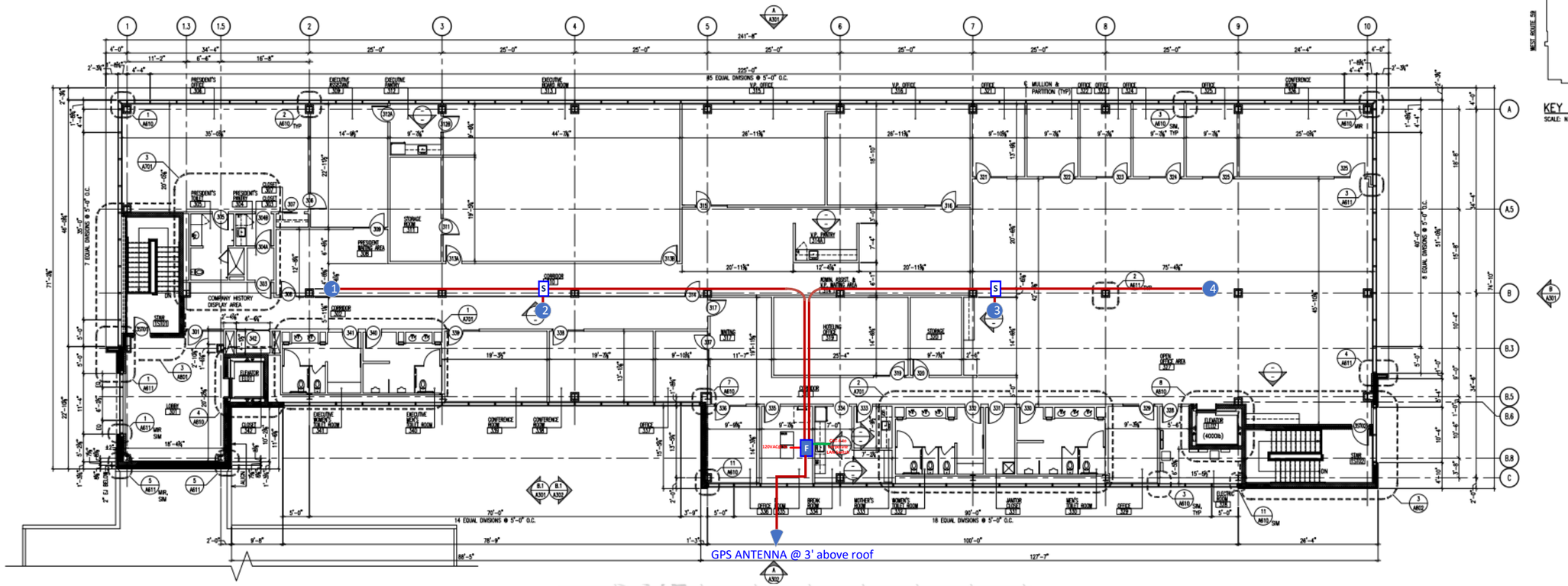

1 THIRD FLOOR CONSTRUCTION PLAN
SCALE: 1/8" = 1'-0"

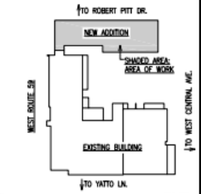

KEY PLAN
SCALE: N.T.S.

NOTES & LEGEND:

FEMTOCELL
- To be installed in the middle of the 1st fl. and at least 8' above fl.
- Dimension: (9.5"x9.5"x2.6")
- Power requirement: 120VAC@3A

LDF4-50 RF CABLE
- LDF4-50 RF cable shortest run between Femtocell & GPS antenna on the roof and between Femtocell & internal antennas. Avoid sharp bends.

INTERNAL ANTENNA 1

INTERNAL ANTENNA 2

INTERNAL ANTENNA 3

INTERNAL ANTENNA 4

CAT-6 Duplex Drop
- nearest run to corporate network switch

RF SPLITTER

GPS ANTENNA

REVISION NOTES		
REV: 1	DATE: -	REVISED BY: -
REV: 2	DATE: -	REVISED BY: -
REV: 3	DATE: -	REVISED BY: -
REV: 4	DATE: -	REVISED BY: -
REV: 5	DATE: -	REVISED BY: -
REV: 6	DATE: -	REVISED BY: -
REV: 7	DATE: -	REVISED BY: -
REV: 8	DATE: -	REVISED BY: -
REV: 9	DATE: -	REVISED BY: -
REV: 10	DATE: -	REVISED BY: -

conEdison
4 Irving Place
New York, N.Y. 10003
Tel: 212-460-4600 Fax: 212-982-7816

DEPARTMENT:

IT Communications Infrastructure & Site Design (IT-CISD)

NETWORK ENGR.
Virgilio Veloso

NETWORK ENG. TEL No.

PROJECT MANAGER
-

PROJECT MGR. TEL No.
-

SITE LOCATION:
-
-
-

WORK DESCRIPTION:
SVOC Building Expansion
Femtocell Installation – Floor 3
-

JOB NUMBER:	DRAWN BY: Virgilio Veloso	
SCALE: N.T.S.	DATE: 03/26/2025	REVISION No. 2
FILE NAME: -		
DRAWING TYPE: -		SHEET: 3 OF 4

ATTACHMENT – R900 - Femtocell GPS Antenna Installation and Grounding Reference

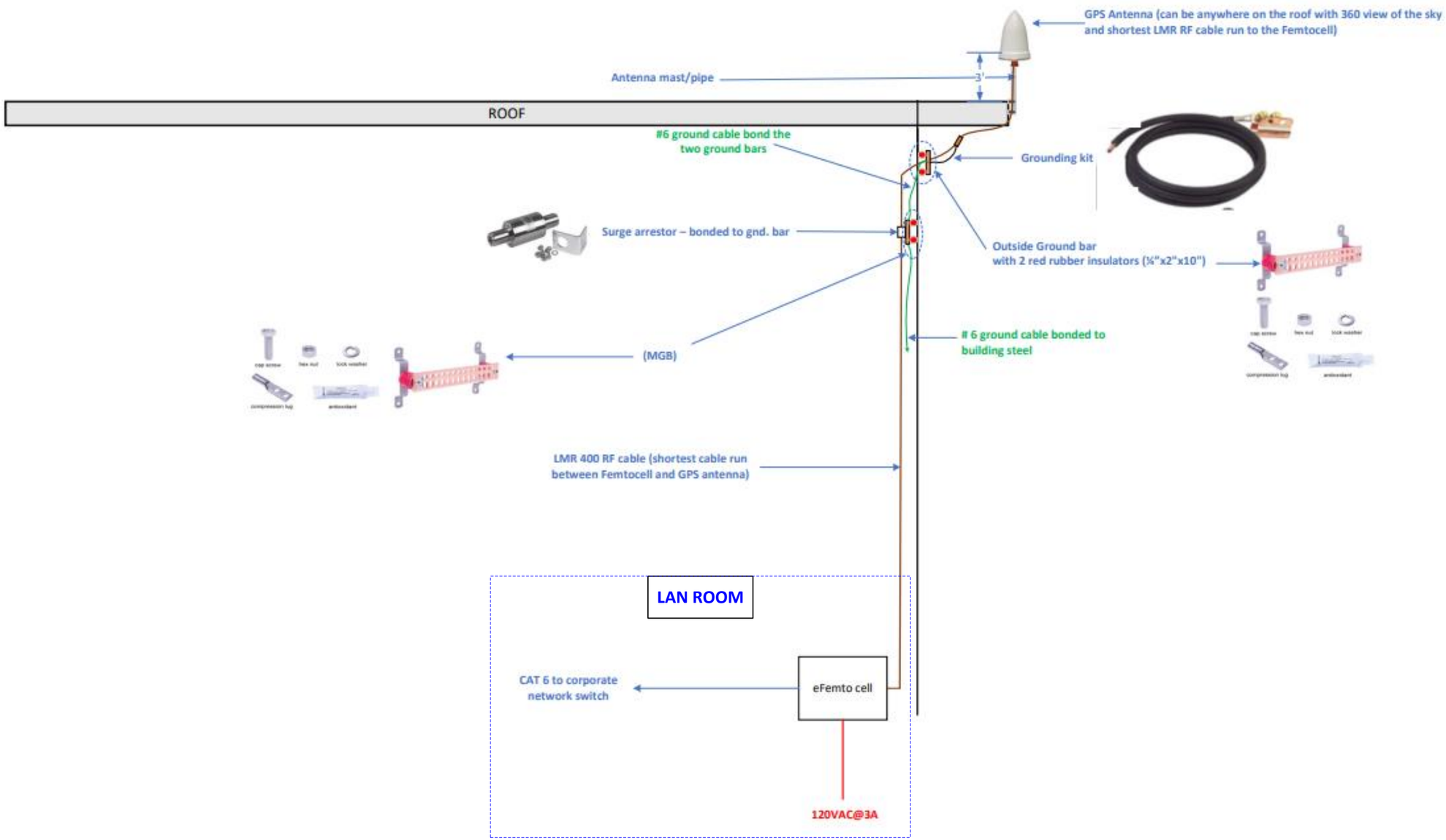

REVISION NOTES		
REV: 1	DATE: -	REVISED BY: -
REV: 2	DATE: -	REVISED BY: -
REV: 3	DATE: -	REVISED BY: -
REV: 4	DATE: -	REVISED BY: -
REV: 5	DATE: -	REVISED BY: -
REV: 6	DATE: -	REVISED BY: -
REV: 7	DATE: -	REVISED BY: -
REV: 8	DATE: -	REVISED BY: -
REV: 9	DATE: -	REVISED BY: -
REV: 10	DATE: -	REVISED BY: -

conEdison
4 Irving Place
New York, N.Y. 10003
Tel: 212-460-4600 Fax: 212-982-7816

DEPARTMENT:

IT Communications Infrastructure & Site Design (IT-CISD)

NETWORK ENGR.
Virgilio Veloso

NETWORK ENG. TEL No.

PROJECT MANAGER
-

PROJECT MGR. TEL No.
-

SITE LOCATION:
-
-
-

WORK DESCRIPTION:
-SVOC Building Expansion Femtocell GPS
-Antenna Installation and Grounding Reference

JOB NUMBER:		DRAWN BY: Virgilio Veloso
SCALE: N.T.S.	DATE: 03/26/2025	REVISION No. 1
FILE NAME: -		
DRAWING TYPE: -		SHEET: 4 OF 4

SPECIFICATION NO. IT-CISD-COPPER-CAT-6-and-6A-STD-01

Consolidated Edison Company of New York
4 Irving Place, New York, New York 10003

Information Technology
Communications Infrastructure & Site Design
(CISD)

DESCRIPTION

Standard Specification for Installation of
CAT-6 and 6A Cabling Infrastructure

Prepared By: Ron Devito Date: May 28, 2024
Systems Specialist

Reviewed By: Paul Nardelli Date: August 6, 2024
Systems Specialist

Approved By: Michael J. Ribarich Date: August 6, 2024
Systems Manager

Printed on 8/6/2024

INTERNAL

Table of Contents

1.0 PURPOSE 3
3.0 USERS, REVIEWERS AND APPROVERS 3
4.0 EXCEPTIONS / DEVIATION PROCESS 3
5.0 TECHNICAL REQUIREMENTS 4
5.1 Technical Scope 4
5.2 Cable Pathways 4
5.3 Copper Data Cable Material Requirements 4
5.3.1 Indoor Rated CAT-6 Cable 4
5.3.2 Outdoor Rated and Indoor/Outdoor CAT-6A Cable 5
5.3.3 Cable Managers 6
5.3.4 CAT-6 Panels – UltraMAX Hybrid 6
5.3.6 CAT-6 Boxes and Faceplates 6
5.3.7 CAT-6 Connectors 9
5.3.8 CAT-6 Connector Termination 11
5.3.9 CAT-6 Patch Cables 12
5.4 Copper Cable Installation Requirements 13
5.4.6 Horizontal Pathways 13
5.4.7 Horizontal Runs 13
5.4.8 LAN Room 14
5.4.9 Patch Cables 15
5.4.10 Blanking Panels and Horizontal Cable Managers 16
5.4.11 Workstation 16
5.4.12 Siemon Component Colors 18
5.4.13 Voice Demarcation 18
5.5 Microwave Radios and Associated Cabling 18

1.0 PURPOSE

1.1 This specification provides the technical requirements for the design and installation of CAT-6 structured cabling systems used to connect devices within a local area network (LAN), and CAT-6A for outside plant, high-wattage wireless access points, and short-haul 10GB data transmission over copper.

2.0 APPLICABILITY

2.1 This specification applies to new or renovated / rebuilt corporate sites, control, centers, data centers and field sites. CAT-6 should not be mixed and matched with existing 5e installations in the same patch panels. All panels where cables originate should be clearly marked with the correct CAT standard: CAT-5e, CAT-6, CAT-6A. Any addition to the existing CAT-5e plant should be done in 5e.

2.2 In 2023, Siemon announced that it was discontinuing the manufacture of MAX jacks but keeping the remainder of the MAX line intact.

2.3 In 2024, IT-CISD adopted Siemon UltraMax Hybrid CAT-6 as the standard for new LAN and communication room build-outs, to modernize and begin phasing out CAT-5e. UltraMax Hybrid jacks will fit all MAX panels, faceplates and surface-mount boxes.

2.4 UltraMax panels should not be used, because they require a panel-specific jack, making them more labor and material-intensive to install.

2.5 Some specialized installations require CAT-6A. It is specifically required when 10GB must pass over its entire 100-meter length. CAT-6A, therefore, is ideal for use in on-premises data centers in lieu of sub-100-meter fiber circuits. CAT-6A is also specified for higher voltage and wattage required by some wireless access points, and being generally shielded, outdoor CAT-6A is a more robust outdoor copper cabling standard.

3.0 USERS, REVIEWERS AND APPROVERS

3.1 The users of this specification are members of IT Communications Infrastructure & Site Design (CISD) group responsible for the design and build of LAN physical infrastructure including copper structured cabling systems. Other users are contractors who also design and build copper structured cabling systems.

3.2 The approver of the document is the CISD Systems Manager. The group's LAN physical infrastructure SMEs will propose changes to the CISD Systems Manager. Revised documents will be placed in the group's SharePoint public folder.

3.3 The review process is ongoing as new parts and technologies develop and are utilized. A formal review will take place annually in January by the CISD group to capture any changes that may not yet been incorporated.

3.4 Training requirements will be met by formal technical training by outside groups such as The Siemon Company, by internal on the job training, and group collaboration.

4.0 EXCEPTIONS / DEVIATION PROCESS

4.1 CISD will follow a review and approval process for interim changes required during emergent situations.

4.2 Interim changes will be handled by email or verbal notification by the CISD Systems Manager and/or the appropriate CISD SMEs.

4.3 The process and forum for communicating Interim changes will be periodic staff meetings or by teleconference scheduled by the CISD Systems Manager.

INTERNAL

5.0 TECHNICAL REQUIREMENTS

5.1 Technical Scope

5.1.1 Unless otherwise stated in the bid specification or MiniPO, the work to be done by the Contractor as described in the Scope of Work section of the project specification (bid spec or MiniPO) shall be done in accordance with the requirements set forth in this document

5.1.2 Any deviation from the CISD Materials and Installation requirements listed below must receive prior approval from the CISD Project Manager. Deviations not receiving prior written approval will be subject to replacement and/or correction at the Contractor's expense.

5.2 Cable Pathways

5.2.1 The CISD project manager is responsible for identifying preliminary cable pathways.

5.2.2 Since the pathways provided by the CISD project manager are preliminary, it is the Contractor's responsibility to develop a defined cable pathway.

5.2.3 The Contractor is responsible for adhering to all local and environmental regulations regardless of what might be stated in the Specification or Scope of Work. If directions conflict with regulations, these need to be raised and discussed. A solution needs to be provided by the CISD project manager and/or an EH&S representative, in writing, before work can proceed.

5.2.4 The Contractor shall ensure that pathways qualify for Siemon Certification and extended warranty whether cabling is being installed as a Siemon certified project or not.

5.2.5 Con Edison CISD, and the site Environmental representative must review and approve the cable pathway design before installation begins.

5.2.6 The Contractor's certification technician is required to review the proposed cable pathway with the CISD Project Manager.

5.2.7 The Contractor shall obtain from the CISD project manager, prior to beginning any work, approval of the finalized cable pathways.

5.3 Copper Data Cable Material Requirements

5.3.1 Indoor Rated CAT-6 Cable

5.3.1.1 Category 6 cabling shall be Plenum rated, 23 AWG, and must be approved by Siemon for their 25-year System 6^{SM} certification. CAT-6A installations are covered under UltraMAX™6A or Z-MAX® 6A Warranty, also 25 years.

5.3.1.2 Some acceptable manufactures of Plenum Rated CAT-6 cable are Belden, BerkTek, CommScope, Mohawk, and Siemon.

- Belden 2413 CAT-6 cable
    - Part # 2413 004A1000 – Yellow
    - Part # 2413 D15A1000 – Blue
    - Part # 2413 008A1000 – Grey
    - Part # 2413 005A1000 – Green
- BerkTek LANMARK06 CAT-6 Plenum
    - Berk-Tek LANMark06 CAT 6 Plenum 4-Pair UTP Cable Blue 6P4P24-BL-P-BER-AP-NS
    - Berk-Tek LANMark06 CAT 6 Plenum 4-Pair UTP Cable White 6P4P24-WH-P-BER-AP-NS

INTERNAL

- Berk-Tek LANMark06 CAT 6 Plenum 4-Pair UTP Cable Yellow 6P4P24-YL-P-BER-AP-NS
- Berk-Tek LANMark06 CAT 6 Plenum 4-Pair UTP Cable Green 6P4P24-GN-P-BER-AP-NS

- Siemon CAT-6 UTP E4 Plenum Cable
  - Siemon CAT-6 UTP E4 Plenum Reel-in-Box Blue 9C6P4-E4-06-RBA
  - Siemon CAT-6 UTP E4 Plenum Reel-in-Box White 9C6P4-E4-02-RBA
  - Siemon CAT-6 UTP E4 Plenum Reel-in-Box Yellow 9C6P4-E4-05-RBA
  - Siemon CAT-6 UTP E4 Plenum Reel-in-Box Green 9C6P4-E4-07-RBA

5.3.1.3 Some acceptable manufactures of Low-Smoke Zero Halogen (LSZH) CAT-6 cable are Belden, CommScope, and L-Com®. “PVC-Free” is NOT available in CAT-6. LSZH cable is a specialty product with limited availability and long lead time. This cabling generally used for runs inside generating stations.

- Belden LSZH CAT-6 cable – ONE color available only.
  - 7860ENS Cat 6 Cable, SF/UTP, LSZH, 4 Pair bonded, AWG 23, Indoor CPR Dca #BEL7860ENS
- CommScope LSZH Cable – 3,000 Foot Reels Only.
  - GigaSPEED XL® 5071A ETL Verified Category 6 U/UTP Cable, LSZH, non-plenum CMR rated, black jacket, 4 pair count, 3000 ft (914 m) length, reel 760175281 | 5071A BLK
  - GigaSPEED XL® 5071A ETL Verified Category 6 U/UTP Cable, LSZH, non-plenum CMR rated, green jacket, 4 pair count, 3000 ft (914 m) length, reel 760177394 | 5071A GRN
  - GigaSPEED XL® 5071A ETL Verified Category 6 U/UTP Cable, LSZH, non-plenum CMR rated, yellow jacket, 4 pair count, 3000 ft (914 m) length, reel 760177410 | 5071A YEL

5.3.1.3.3 L-Com LSZH CAT-6

- L-Com Category 6 UTP LSZH Rated 23 AWG 4-Pair Solid Conductor Blue, 1KFT

5.3.2 Outdoor Rated and Indoor/Outdoor CAT-6A Cable

5.3.2.1 Outside Copper Plant Cabling is best performed with Shielded CAT-6A.

5.3.2.2 CAT-6A Shielded may be used in lieu of fiber circuits for temporary structure LAN cabinet uplinks when distances are 100 meters or less.

5.3.2.3 Some acceptable manufactures of Outdoor rated CAT-6A cable are BerkTek, CommScope, Mohawk, and Siemon. Outdoor Cables are generally offered in black jacket only.

5.3.2.4 Outdoor-only cables may run indoors for a maximum of 50 lineal feet, after which, all cabling must transition to indoor cabling. Indoor/Outdoor cables are

preferred where runs may extend beyond 50 lineal feet of cable into the building envelope.

5.3.2.5 Following examples of available cabling:

5.3.2.6 Show Me Cables CAT-6A Outdoor Only Solid PVC UTP - 85-665-314 BK:1000

5.3.2.7 Show Me Cables CAT-6A Indoor/Outdoor UV Resistance, STP - 85-665-417 BK:1000

5.3.2.8 Show Me Cables CAT-6A Outdoor Direct Burial Solid Water Block STP - 85-665-636 BK:1000

5.3.2.9 Siemon CAT-6A Shielded OSP Cable for Direct Burial, Lashed Aerial, Duct and Underground Conduit. 1000-foot spool. 9A6O4-A5-01AR1A.

5.3.3 Cable Managers

5.3.3.1 The following Siemon (or equivalent) hook & loop type Cable Managers shall be used to bundle or manage cables:

- VCM-500-060-X (Velcro 2” Diameter Cable Managers)
- VCM-500-120-X (Velcro 4” Diameter Cable Managers)
- VCM-500-180-X (Velcro 6” Diameter Cable Managers)

5.3.4 CAT-6 Panels – UltraMAX Hybrid

5.3.4.1 Siemon MAX Panels shall be used on racks for Category 6 UltraMax cable terminations, as follows:

- For up to 16 connectors use (Siemon part # MX-PNL-16)
- For up to 24 connectors use (Siemon part # MX-PNL-24)
- For up to 48 connectors use (Siemon part # MX-PNL-48)
- For up to 72 connectors use (Siemon part # MX-PNL-72)

5.3.5 CAT-6 Panels - UltraMAX Keystone

5.3.5.1 Siemon Keystone Panels should be used when performing an end-to-end Keystone installation, typically large office spaces with modular furniture.

- For up to 24 connectors use (Siemon part # KPNL-F1-24-01S)
- For up to 48 connectors use (Siemon part # KPNL-F1-48-01S)
- Siemon Keystone panels do not come in sizes other than 24- or 48-ports.

5.3.6 CAT-6 Boxes and Faceplates

5.3.6.1 Siemon SM series White surface-mount (SM) boxes shall be used for Category 6 cable terminations in modular furniture without accessible raceway and integrated furniture outlet opening. SM boxes shall also be used where flush-mount faceplates are not possible. Use boxes as follows:

- For Single drops use (Siemon part # MX-SM1-02)
- For Duplex drops use (Siemon part # MX-SM2-02)
- For Quad drops use (Siemon part # MX-SM4-02)

Figure 1 - Surface-Mount (SM) Boxes

INTERNAL

Siemon SM series White surface-mount boxes (Siemon part # MX-SM2-02) shall be used for Category 6 for duplex drop cable terminations associated with access point support. Alternatively, the specialized recessed box (Siemon part # MX-WB1-02-02) may be used.

Siemon White single-gang flush-mount faceplates shall be used for Category 6 cable terminations in private offices and other non-modular work areas.

- For single drops use (Siemon part # MX-FP-S-01-02)
- For duplex drops use (Siemon part # MX-FP-S-02-02)
- For triplex drops use (Siemon part # MX-FP-S-03-02)
- For quad drops use (Siemon part # MX-FP-S-04-02)
- For hex drops use (Siemon part # MX-FP-S-06-02)

Figure 2 – Single-gang Flush-Mount Faceplates – UltraMax 6 Hybrid

Siemon White double-gang flush-mount faceplates shall be used for Category 6 cable terminations where a larger number of cables need to be accommodated.

- For 8-cable drops use (Siemon part # MX-FP-S-08-02)
- For 12-cable drops use (Siemon part # MX-FP-S-12-02)

Figure 3 – Double-gang Flush-Mount Faceplates – UltraMax 6 Hybrid

- Siemon Stainless Steel single-gang flush-mount faceplates shall be used for Category 6 cable terminations in substations, power generating stations, machine shops, other industrial environments, or high-traffic areas.
- For duplex drops use (Siemon part # MX-FP-S-02-SS)
- For quad drops use (Siemon part # MX-FP-S-04-SS)

INTERNAL

Figure 4 – Siemon Stainless Steel Faceplates – UltraMax 6 Hybrid

Figure 5 – Siemon Plastic and Stainless Steel Faceplates – UltraMax 6 Keystone

5.3.6.2 Siemon Ruggedized MAX faceplates shall be used for drops located outdoors or in wet environments, such as pump houses. Ruggedized installations will most likely use CAT-6A Shielded.

- For single drops use (Siemon part # XFP-S-01-SS)
- For duplex drops use (Siemon part # XFP-S-02-SS)
- For triplex drops use (Siemon part # XFP-D-03-SS)
- For quad drops use (Siemon part # XFP-D-04-SS)

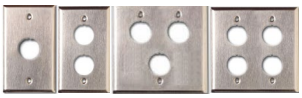

Figure 6 – Ruggedized MAX Stainless Steel Faceplates

5.3.6.7 Siemon Ruggedized G2 Z-MAX Outlets must be used in conjunction with the Ruggedized MAX faceplates. The prior Industrial MAX outlets have been discontinued along with standard MAX jacks.

- For CAT-6 UTP use (Siemon part # XG2-Z6). CAT-6 is only available un-shielded.
- For CAT-6A UTP use (Siemon part # XG2-Z6A).
- For CAT-6A STP use (Siemon part # XG2-Z6AS).

5.3.6.3 The appropriate modular furniture adapter must be used for the furniture in which it is being installed, considering dimensions, color and the existence or non-existence of factory installed faceplates.

5.3.6.4 When furniture has pre-installed Keystone faceplates with outlet openings, the installation should be performed as Keystone end-to-end to maintain a singular standard throughout the LAN. In this environment, modular furniture adapters are not applicable as they are built into the furniture.

5.3.6.5 Siemon MAX White modular furniture adapters (Siemon part # MX-MFP-02) shall be used for Category 6 cable terminations in modular furniture with accessible raceway and integrated furniture blank outlet openings sized 1.35” x 2.35”.

5.3.6.6 Siemon MAX White Modular furniture adapters (Siemon part # MX-MFP-HMA-02) shall be used for Category 6 cable terminations in modular furniture with accessible raceway and integrated furniture blank outlet openings sized 1.88” x 2.98”.

Figure 7 – Modular Furniture Adapters

5.3.6.7 Siemon MAX White modular furniture adapters (Siemon part # MX-UMA-02) shall be used for Category 6 cable terminations in all other modular furniture with accessible raceway and integrated furniture blank outlet openings.

5.3.6.8 For gray Herman Miller Ethospace, where it is still in use, the Universal adapter should be used (Siemon part # MX-UMA-04). Herman Miller-specific faceplates have been discontinued.

5.3.6.9 Blank modules shall be used to fill unused Max connector positions as Follows:

- (Siemon part # MX-BL-01) - Black
- (Siemon part # MX-BL-02) - White
- (Siemon part # MX-BL-04) – Gray

Figure 8 – Blank MAX Modules

5.3.7 CAT-6 Connectors

5.3.7.1 Siemon UltraMAX 6 Hybrid Yellow (U6-H05NB) and Violet (U6-H08NB) coupler modules should be used and the icons dispensed with. Note: the B in each part number denotes a 100-jack bulk pack.

5.3.7.2 Siemon UltraMax 6 Hybrid Yellow (U6-H05NB) and Violet (U6-H08NB) coupler modules should be used and the icons dispensed with. Note: the B in each part number denotes a 100-module bulk pack.

INTERNAL

Figure 9 – Flat UltraMAX Coupler Module

IMPORTANT: UltaMax Panels are only compatible with a Siemon proprietary Panel Mounted coupler module (U6-P00NB) for CAT-6 and (U6A-P00NB) for CAT-6A, the B in both part numbers denoting a 100-module bulk pack.

5.3.7.3 NOTE: Angled Coupler Modules are not available in CAT-6 or 6A.

5.3.7.4 UltraMax 6 Keystone Modules (U6-KXX-NB), where XX denotes the color code and B denotes a bulk pack shall be used for modular furniture build-outs, where the furniture is factory built for Keystone. The same modules should be used at the LAN room along with Keystone Panels # KPNL-F1-24-01S or # KPNL-F1-48-01S to maintain a consistent standard.

5.3.7.5 Siemon Ruggedized MAX outlets shall be used for drops terminated in Ruggedized MAX faceplates.

- CAT-6 UTP Part # (XG2-Z6).
- CAT-6A UTP Part # (XG2-Z6A).
- CAT-6A STP Part # (XG2-Z6AS).
- NOTE: There is no shielded CAT-6 outlet in this product line. All shielded Ruggedized infrastructure, therefore, will be installed with CAT-6A.

Figure 10 – Industrial Z-MAX Outlet

5.3.8 CAT-6 Connector Termination

5.3.8.1 CAT-6 cable shall be terminated on Siemon UltraMAX coupler modules using Siemon recommended procedures.

5.3.8.2 To properly terminate CAT-6 cables on UltraMAX connectors, speed up the termination process and provide more uniform terminations, it is highly recommended that a Siemon UltraMAX TurboTool (Part# UMAX-TT) be used.

Figure 11 – UltraMAX TurboTool

5.3.8.3 Alternatively a Siemon Punchdown Tool (Part# UMAX-PD) may be used.

Figure 12 – Siemon UltraMax Punchdown Tool with Replacement Head

5.3.8.4 Ruggedized Z-MAX connectors in either CAT-6 or 6A should be terminated with the Z-Tool, which comes in three versions:

- (Z-Tool) – Straight cable orientation
- (Z-Tool-45) – 45-degree cable orientation
- (Z-Tool-Plug) – Field-terminated Z-Plugs.

Figure 13 – Siemon Z-Tool

5.3.9 CAT-6 Patch Cables

5.3.9.1 Patch cables installed at the rack, between the patch panels and the LAN switches, shall have a matching cable & boot color.

5.3.9.2 Patch cables shall be supplied as needed in 5 lengths between 2 and 10 feet.

5.3.9.3 Patch cables shall be available in the following five lengths:

- Two feet
- Three feet
- Five feet
- Seven feet
- Ten feet

5.3.9.4 Patch cables shall be available in 10 different colors as follows:

- Black
- White
- Blue
- Red
- Green
- Yellow
- Gray
- Orange
- Purple
- Pink

5.3.9.5 Patch cables from any vendor that has factory terminated & tested, Cat 6 certified cables in the required colors is acceptable. Some vendors meeting these requirements are:

Video Products Inc
1275 Danner Dr
Aurora, OH 44202
Telephone: 330-562-2622
Toll Free: 800-626-7801
Fax: 330-562-1999

ShowMeCables.com
18079 Edison Avenue
Chesterfield, MO 63005
Phone # 888.519.9505
Fax # 888.519.9515
Email Sales: Sales@ShowMeCables.com

5.3.9.6 VPI Patch cable part #'s use the following nomenclature:

- CAT6-XX-"COLOR", where the XX signifies the length and "COLOR" signifies the cable and boot color
  - Example: CAT6-10-ORANGE represents a 10' orange patch cable with orange boots

5.3.9.7 ShowMeCables Patch cable part #'s use the following nomenclature:

- 600-XX-"COLOR", where the XX signifies the length and "COLOR" signifies the cable and boot color
  - Example: 600-10-OR represents a 10' orange patch cable with orange boots

5.4 Copper Cable Installation Requirements

5.4.6 Horizontal Pathways

5.4.6.1 All cable shall be installed along previously defined and approved pathways.

5.4.6.2 Cabling shall be installed using a combination of cable supports as required for Siemon certification.

5.4.6.3 Cable supports shall be provided by means that are structurally independent of the suspended ceiling, its framework, or support rods.

5.4.6.4 When hangers such as J - hooks are used for main cable runs, J - hook trees with a minimum capacity of four J – hooks per tree shall be used. The cable installation contractor should ensure that at least 2 unused (spare) J - hooks are available after all runs are completed.

5.4.6.5 Panduit J-PRO line of nonconductive J-Hooks shall be used for CAT-6 and CAG-6A cabling supports.

5.4.6.6 The cable installation contractor shall identify, supply and install all required cable support products.

5.4.7 Horizontal Runs

5.4.7.1 Cable drops are defined as follows:

- Hex drops – Contain 6 cables from the LAN room to a single location
- Quad drops – Contain 4 cables from the LAN room to a single location
- Duplex drops – Contain 2 cables from the LAN room to a single location
- Single drops – Contain 1 cable from the LAN room to a single location

5.4.7.2 All Category 6 and 6A cables entering the LAN room shall be neatly combed through and bundled as groups of no more than 48 cables.

5.4.7.3 Hook and loop type cable managers shall be used to bundle and manage and secure all cable runs and patch cables.

5.4.7.4 Tie-wraps shall never be used for bundling, managing or securing any copper cables.

5.4.8 LAN Room

5.4.8.1 MX panels shall be installed on the Cabling rack in the panel sizes and in rack positions depicted in the Rack elevation sketch associated with the supplied Work Scope.

5.4.8.2 P-Touch or equivalent label with lettering that is at least 7 mm high shall be affixed to the left of each panel.

5.4.8.3 The text shall contain the following:

- Row 1 – the Word “CAT-6” or “CAT-6A” and the type of drop supported on this Panel (Single, Duplex, Quad or Various)
- Row 2 – Panel number (topmost panel is 1 and continues sequentially down the rack)
- Row 3 – Drop numbers installed on this Panel.
  - Example: The second panel from the top supporting Duplex drops number 2 through 48 would be labeled

```
|    CAT-6 – Duplex    |
|         Panel 2      |
|   Drops 2 through 48 |
```

5.4.8.4 Labels (Black with white lettering) shall be affixed to each MX panel and annotated with the drop number associated with each coupler.

5.4.8.5 All CAT-6 and 6A cables and associated couplers shall be installed into MX or Keystone panels as applicable.

5.4.8.6 Each of the cables in a Plenum rated cable “drop” shall be of a different cable color. The “drop” or “outlet” position of each cable color shall remain constant throughout a project. The cable colors shall be installed as follows:

- Cable A – Yellow
- Cable B – Blue
- Cable C – Gray
- Cable D – Green

5.4.8.7 Drops shall use cable colors as follows:

- Single drop shall use cable A
- Duplex drops shall use cables A & B
- Quad drops shall use cables A, B, C & D

5.4.8.8 Each of the cables in a Low Smoke Zero Halogen rated cable “drop” shall use one of two different available cable colors. The “drop” or “outlet” position of each cable color shall remain constant throughout a project. The cable colors shall be installed as follows in these examples. Actual colors may differ based on product availability:

- Cable A – Blue
- Cable B – White

- Cable C – Blue
- Cable D – White

5.4.8.9 Drops shall use cable colors as follows:

- Single drop shall use cable A
- Duplex drops shall use cables A & B
- Quad drops shall use cables A, B, C & D

5.4.8.10 All CAT-6 Cabling shall be terminated, tested and documented following all required Siemon procedures, in a manner that will qualify them for Siemon System 6™ Certification.

5.4.8.11 All CAT-6A cabling shall be terminated, tested and documented following all required Siemon procedures in a manger that will qualify them for Siemon UltraMAX™6A or Z-MAX® 6A Warranty as applicable.

5.4.8.12 Following termination, all Category 6 or 6A cables shall have a firmly attached cable number label, located ~2" behind the connector at each end of the cable.

5.4.8.13 The Cable number label shall be annotated, using a professional cable label maker such as Brady or Panduit, with the drop # and the letters A, B, C or D for the cables in each “drop”.

- Example: Drop #12, position “A” shall have the following label – 012A

5.4.9 Patch Cables

5.4.9.1 All patch cables for a particular MX panel shall be the same color.

5.4.9.2 Patch cable lengths shall be sized for proper cable management without excessive slack cable.

5.4.9.3 Patch cable colors shall follow the following color scheme:

- Connected to 1st Station Panel use – Black
- Connected to 2nd Station Panel use – White
- Connected to 3rd Station Panel use – Blue
- Connected to 4th Station Panel use – Red
- Connected to 5th Station Panel use – Green
- Connected to 6th Station Panel use – Yellow
- Connected to 7th Station Panel use – Gray
- Connected to 8th Station Panel use – Orange
- Connected to 9th Station Panel use – Purple
- Connected to 10th Station Panel use – Pink

5.4.9.4 One patch cable shall be supplied for each Single drop.

5.4.9.5 Two patch cables shall be supplied for each Duplex or greater drop.

5.4.9.6 The cable connected to the coupler with a Yellow Tab shall be connected between the patch panel and the Con Edison supplied LAN switch.

5.4.9.7 The patch cables installed between the CAT-6 or CAT-6A patch panels and LAN switches shall be routed and managed inside the Vertical Wire Manager, on the side closest to the switches, in neatly groomed bundles secured with hook & loop cable managers.

5.4.9.8 Patch cables shall be labeled with a Brady or Panduit labeling system. The labels on the patch cables shall provide the following information: a three-digit drop number followed by the first letter of the jack color.

INTERNAL

Example: A patch cable to be plugged into drop #12 with the Yellow Jack coupler shall have the following label – 012Y

5.4.10 Blanking Panels and Horizontal Cable Managers

5.4.10.1 Blank Rack Unit (RU) spaces on a rack are to be filled as indicated on the Rack Elevation attachment using a combination of the following Siemon (or equivalent) blank panels:

- Siemon PNL-BLNK-1 (1 RU Blank Panel)
- Siemon PNL-BLNK-2 (2 RU Blank Panel)
- Siemon PNL-BLNK-3 (3 RU Blank Panel)

5.4.10.2 1-RU Flush mount Horizontal Cable Organizers with brush strip APC (part# AR8429) shall be used for passing cables from the front to the rear of a rack

Figure 14 – APC Horizontal Brush Strip Cable Organizer

5.4.11 Workstation

5.4.11.1 The contractor is responsible for the movement of furniture, file cabinets or any other obstacles as needed to perform this work. The contractor shall return all moved items to their original positions following work each shift.

5.4.11.2 It is recommended that when the Contractor will be working in an occupied space, pictures should be taken of the space before and after work in the event complaints of damage or cleanliness issues are raised by the occupants.

5.4.11.3 Where standard mounting heights result in inaccessibility to the user, the drop should be located (higher/lower) as field conditions dictate.

5.4.11.4 Category 6 cables that are installed in modular furniture with accessible raceway and integrated furniture outlet openings shall terminate in the correct size Siemon MAX modular furniture adapters with UltraMax 6 modules (U6-HXX) wired to the T568B scheme.

5.4.11.5 Category 6 cables that are installed in modular furniture with accessible raceway and integrated Keystone furniture outlet openings shall terminate in the factory-installed Keystone faceplates with Siemon UltraMAX Keystone modules (U6-KXX-NB – the B denoting a bulk pack) wired to the T568B scheme. LAN room should use Keystone Panels and jacks to maintain a consistent standard.

5.4.11.6 Category 6A cables should ***NOT*** be installed in modular furniture.

5.4.11.7 Category 6 cables that are installed in private offices and other non-modular work areas where subsurface “GEM” boxes or “Caddy” type fasteners can be installed, shall terminate in Siemon single gang faceplates shall be used as follows:

- For quad drops use (Siemon part # MX-FP-S-06-02)
- For quad drops use (Siemon part # MX-FP-S-04-02)
- For duplex drops use (Siemon part # MX-FP-S-02-02)
- For single-cable drops use (Siemon part # MX-FP-S-01-02)

5.4.11.8 Siemon UltraMAX 6 Hybrid modules (U6-HXX) wired to the T568B scheme shall be used with the faceplates, except in Keystone environments where Keystone Faceplates and Jacks shall be used.

5.4.11.9 Category 6 cables that are installed in modular furniture without accessible raceway and integrated furniture outlet openings shall terminate in Siemon SM series surface mount boxes (SM-4-02) for quad drops and (SM-2-02) for duplex drops with Siemon UltraMax hybrid modules (U6-HXX) wired to the T568B scheme.

5.4.11.10 Category 6 or 6A cables for access point support will be installed in the ceiling plenum using an SM2 mount with a 5' minimum service loop, or Siemon specialized AP recessed box MX-WB1-02-02.

5.4.11.11 Category 6 cables that are installed in private offices and other non-modular work areas where subsurface "GEM" boxes or "Caddy" type fasteners cannot be installed shall terminate in Siemon SM series surface mount boxes (SM-4-02) for quad drops and (SM-2-02) for duplex drops with Siemon UltraMax Hybrid 6 modules (U6-HXX), wired to the T568B scheme.

5.4.11.12 For applications where a larger number of CAT-6 cables need to be accommodated, Siemon White double-gang flush-mount faceplates (MX-FP-S-12-02) for 12-cable drops and (MX-FP-S-08-02) for 8-cable drops shall be used for Category 6 cable terminations.

5.4.11.13 Category 6 Cables entering SM boxes mounted to walls shall be contained in a raceway. White Panduit, size LD 3, LD5, LD10 size raceway shall be used.

5.4.11.14 Each faceplate or surface mount box shall be labeled, using label included with the faceplate or an appropriate P-Touch type, as follows: The rack number supporting this drop and the drop number.

- Example: Drop #12 being distributed from rack #1 would be labeled R1-012.

5.4.11.15 The cable installation contractor shall supply two (2) 10' Category 6 Patch Cable (VPI Part # CAT6-10-WHITE) or equivalent per drop for use at the work area.

INTERNAL

5.4.12 Siemon Component Colors

5.4.12.1 The cable installation contractor shall consult with the Con Edison IT Project manager and/or architect before ordering materials for which a color has not been specified.

5.4.13 Voice Demarcation

5.4.13.1 The cable installation contractor shall supply, as directed in the bid specification's detailed Scope of Work, one 25-pair category 3 cable within the LAN Room with factory terminated male Amphenol connector.

5.4.13.2 The cable installation contractor shall supply and install 25-pair RJ66 Block male/female on backboard.

5.4.13.3 The cable installation contractor shall run the cables within the LAN room to the location directed in the bid specification's detailed Scope of Work.

5.4.13.4 The cable installation contractor shall supply and install within the cable racks one (1) DataPatch 25-port, 1-pair, RJ11 Panel (DataPatch part # RJ11-25-2T) for the 25-pair Category 3 cable.

5.4.13.5 The cable installation contractor shall connect both ends of Amphenol between the RJ66 Block & DataPatch panel and test for continuity.

5.4.13.6 The cable installation contractor shall supply and install black Category 3 (RJ11 plug to RJ45 plug) in a quantity to be called out in bid specification's detailed Scope of Work.

5.4.13.7 Patch cables shall be 7 feet in length for interconnection between the station panels and DataPatch panels. These cables shall be labeled and installed in neatly groomed bundles secured with Velcro strips, by the cable installation contractor according to a wiring connection matrix provided by Con Edison IT-CISD.

5.4.13.8 The pin-out for the RJ11 to RJ45 patch cable is as follows:

RJ11 End			RJ45 End	
Pin #	Pair ID		Pin #	Pair ID
			1	Not Connected
1	T3		2	T3
2	T2		3	T2
3	R1		4	R1
4	T1		5	T1
5	R2		6	R2
6	R3		7	R3
			8	Not Connected

5.5 Microwave Radios and Associated Cabling

5.5.1 Cambium Networks™ Microwave Radios PTP820E and PTP850E operate at greater than 1 GB throughput. When this radio is deployed, the Cambium Networks CAT-6A cable is to be encased in conduit through its entire length of travel, run, terminated, and tested.

5.5.1.1 Cambium Networks™ has two model numbers for the same CAT-6A cable depending on the length.

INTERNAL

5.5.1.1.1 N000000L155A - 100 Meters / 328 Feet
5.5.1.1.2 N000082L172B - 305 Meters / 1000 Feet

5.5.2 Cambium Networks™ Microwave Radio PTP670 has a maximum throughput speed of 450Mbps. This is the CECONY standard microwave radio. When it is deployed, an outdoor copper clad CAT-5e cable is to be run, terminated, and tested. As this cable is armored and copper clad, it does not require conduit. The cable is purpose-built to be deployed with this radio.

5.5.2.1 Cambium Networks™ has two model numbers for the same CAT-5e cable depending on the length.

5.5.2.1.1 WB3176A - 100 Meters / 328 feet
5.5.2.1.2 WB3175A - 305 Meters / 1000 Feet

Figure 15 – Cambium Networks™ WB3175A (100m) or WB3176A (305m) Copper Clad Armored CAT-5e for PTP670.

5.5.2.1.3 All microwave cables, whether 5e or 6A must be grounded with a Cambium Networks™ Grounding Kit, Part Number: C000065L007B.

Figure 16 - Cambium Networks™ Grounding Kit, Part Number: C000065L007B.

SPECIFICATION NO. IT-CISD-FIB-STD-03

Consolidated Edison Company of New York
4 Irving Place, New York, New York 10003

Information Technology
Communications Infrastructure & Site Design

DESCRIPTION

Standard Specification for Installation of
Air Blown (ABF) & Conventional Fiber

Prepared By:	Ron Devito Systems Specialist	Date: June 10, 2022
Reviewed By:	Michael J. Ribarich Systems Manager	Date: June 10, 2022
Approved By:	Michael J. Ribarich Systems Manager	Date: June 10, 2022

Printed on 9/9/2022

Table of Contents

PURPOSE *3*
2.0 APPLICABILITY *3*
3.0 USERS, REVIEWERS AND APPROVERS *3*
4.0 EXCEPTIONS / DEVIATION PROCESS *3*
5.0 TECHNICAL REQUIREMENTS *4*
5.1 Technical Scope *4*
5.2 Cable Pathways *4*
5.3 Fiber Material Requirements *5*
5.4 Fiber Installation Requirements *13*
5.5 Fiber Termination Requirements *22*
5.6 Testing Requirements *24*
5.7 Fiber Labeling and Documentation Requirements *24*
5.8 Attachments *27*
5.9 Change Log *27*

PURPOSE

1.1 This specification provides the technical requirements for the design and installation of ABF and conventional fiber structured cabling systems used to connect devices within a local area network (LAN).

2.0 APPLICABILITY

2.1 This specification applies to corporate sites, control, centers, data centers and field sites.

3.0 USERS, REVIEWERS AND APPROVERS

3.1 The users of this specification are members of IT Communications Infrastructure & Site Design (CISD) group responsible for the design and build of LAN physical infrastructure including fiber structured cabling systems. Other users are contractors who also design and build copper structured cabling systems.

3.2 The approver of the document is the CISD Systems Manager. The group's LAN physical infrastructure SMEs will propose changes to the CISD Systems Manager. Revised documents will be placed in group's SharePoint public folder.

3.3 The review process is ongoing as new parts and technologies develop and are utilized. A formal review will take place annually in January by the CISD group to capture any changes that may not yet been incorporated.

3.4 Training requirements will be met by formal technical training by outside groups such as Sumitomo Electric Lightwave, by internal on the job training, and group collaboration.

4.0 EXCEPTIONS / DEVIATION PROCESS

4.1 CISD will follow a review and approval process for interim changes required during emergent situations.

4.2 Interim changes will be handled by email or verbal notification by the CISD Systems Manager and/or the appropriate CISD SMEs.

4.3 The process and forum for communicating Interim changes will be periodic staff meetings or by teleconference scheduled by the CISD Systems Manager.

5.0 TECHNICAL REQUIREMENTS

5.1 Technical Scope

5.1.1 Unless otherwise stated in the bid specification or MiniPO, the work to be done by the Contractor as described in the Scope of Work section of the project specification (bid spec or MiniPO) shall be done in accordance with the requirements set forth in this document.

5.1.2 Any deviation from the CISD Materials and Installation requirements listed below, must receive prior approval from the CISD Project Manager. Deviations not receiving prior written approval will be subject to replacement and/or correction at the Contractors expense.

5.2 Cable Pathways

5.2.1 The CISD project manager is responsible for identifying preliminary cable pathways.

5.2.2 Since the pathways provided by the CISD Project manager are preliminary, it is the Contractors responsibility to develop a defined cable pathway.

5.2.3 The Contractor is responsible for adhering to all local and environmental regulations regardless of what might be stated in the Specification or Scope of Work. If directions conflict with regulations, these need to be raised and discussed. A solution needs to be provided by the CISD PM or an EH&S representative, in writing, before work can proceed.

5.2.4 The Contractor shall ensure that pathways qualify for Sumitomo Certification and extended warranty if ABF is being installed.

5.2.5 Con Edison CISD, and the site Environmental representative must review and approve the cable pathway design before installation begins.

5.2.6 The Contractor’s certification technician is required to review the proposed cable pathway with the CISD Project Manager.

5.2.7 The Contractor shall obtain from the CISD project manager, prior to beginning any work, approval of the finalized cable pathways.

5.3 Fiber Material Requirements

5.3.1 Sumitomo Air Blown Fiber Materials

5.3.1.1 Tube Cable

5.3.1.1.1 When an Outdoor-rated aerial or duct tube cable requiring enhanced thermal stability is called for, the following shall be used:

- For 19-Tube cable, use Sumitomo part #TC19MSOS
- For 7-Tube cable, use Sumitomo part #TC07MSOS
- For 4-Tube cable, use Sumitomo part #TC04MSOS
- For 2-Tube cable, use Sumitomo part #TC02MSOS

Figure 1 - MSOS Tube Cable

5.3.1.1.2 When an Outdoor-rated aerial or duct tube cable requiring enhanced thermal stability and extremely rugged, high crush resistance armoring is called for, the following shall be used:

- For 19-Tube cable, use Sumitomo part #TC19MSOS-2
- For 7-Tube cable, use Sumitomo part #TC07MSOS-2
- For 4-Tube cable, use Sumitomo part #TC04MSOS-2
- For 2-Tube cable, use Sumitomo part #TC02MSOS-2

5.3.1.1.3 When an Outdoor-rated duct or direct buried tube cable is called for, the following shall be used:

- For 19-Tube cable, use Sumitomo part #TC19TOX
- For 7-Tube cable, use Sumitomo part #TC07TOX
- For 4-Tube cable, use Sumitomo part #TC04TOD
- For 2-Tube cable, use Sumitomo part #TC02TOX

Figure 2 - TOX & TOD Tube Cable

5.3.1.1.4 When an Outdoor-rated duct or direct buried tube cable requiring extremely rugged, high crush resistance armoring is called for, the following shall be used:

- For 19-Tube cable, use Sumitomo part #TC19TOX-2
- For 7-Tube cable, use Sumitomo part #TC07TOX-2

- For 4-Tube cable, use Sumitomo part #TC04TOD-2
- For 2-Tube cable, use Sumitomo part #TC02TOX-2

Figure 3 - TOX-2 Tube Cable

5.3.1.1.5 When an Indoor Riser-rated jacketed tube cable is called for, the following shall be used:

- For 19-Tube cable, use Sumitomo part #TC19TRC
- For 7-Tube cable, use Sumitomo part #TC07TRC
- For 4-Tube cable, use Sumitomo part #TC04TRC
- For 2-Tube cable, use Sumitomo part #TC02TRC

Figure 4 - TRC Tube Cable

5.3.1.1.6 When an Indoor Riser-rated jacketed tube cable with extremely rugged, high crush resistance armoring is called for, the following shall be used:

- For 19-Tube cable, use Sumitomo part #TC19TRC-1
- For 7-Tube cable, use Sumitomo part #TC07TRC-1
- For 4-Tube cable, use Sumitomo part #TC04TRC-1
- For 2-Tube cable, use Sumitomo part #TC02TRC-1

5.3.1.1.7 When an Indoor Plenum-rated jacketed tube cable is called for, the following shall be used:

- For 19-Tube cable, use Sumitomo part #TC19TP2
- For 7-Tube cable, use Sumitomo part #TC07TP2
- For 4-Tube cable, use Sumitomo part #TC04TP2
- For 2-Tube cable, use Sumitomo part #TC02TP2

Figure 5 - TP2 Tube Cable

5.3.1.1.8 When an Indoor Plenum-rated jacketed tube cable with extremely rugged, high crush resistance armoring is called for, the following shall be used:

- For 19-Tube cable, use Sumitomo part #TC19TP2-1
- For 7-Tube cable, use Sumitomo part #TC07TP2-1
- For 4-Tube cable, use Sumitomo part #TC04TP2-1
- For 2-Tube cable, use Sumitomo part #TC02TP2-1

5.3.1.1.9 When a low tube count general purpose-rated non-jacketed tube cable that will be run entirely in Conduit is called for, the following may be used:

- For 7-Tube Speed Wrapped cable, use Sumitomo part #TC07TGX (special order)
- For 2-Tube Speed Wrapped cable, use Sumitomo part #TC02TGX (special order)
- For 1-Tube cable, use Sumitomo part #TC01TGX

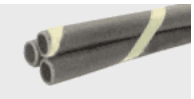

Figure 6 - TGX Tube Cable
(3-tube shown no longer available)

5.3.1.1.10 When tube interconnections inside Tube Distribution Units (TDUs) or at fiber termination points a clear tube shall be used.

- For 8mm clear tube cable, use Sumitomo Part# TC01TCX
- For 5mm clear tube cable, use Sumitomo Part# TC01T5M

5.3.1.2 Air Blown Fiber

5.3.1.2.1 Blown fiber is available in 4 sizes - 6, 12, 18 & 24-strand fiber bundles, in both single-mode and multi-mode types. The following fiber shall be used as required.

- Single-mode 6-strand – Part# FB06SX
- Single-mode 12-strand – Part# FB12SX
- Single-mode 24-strand – Part# FB24SX
- 50 micron (μ) Multi-mode 6-strand – Part# FB06M5
- 50μ Multi-mode 12-strand – Part# FB12M5
- 50μ Multi-mode 24-strand – Part# FB24M5

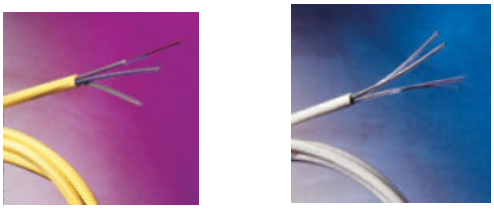

Figure 7 - SM & 50 micron MM Fiber Bundle

5.3.1.3 Fiber Preparation

5.3.1.3.1 Fiber breakout kits shall be used when terminating multi-mode fiber directly onto fiber connectors at both ends of a fiber bundle. The following breakout kits shall be used.

- 6-strand breakout kit – Part# FTFLD06
- 12-strand breakout kit – Part# FTFLD12
- 24-strand breakout kit – Part# FTFLD24

Figure 8 - 24-fiber Bundle Breakout Kit (w/ 900 micron Tubing)

5.3.1.4 Tube Distribution Units

5.3.1.4.1 Tube interconnections are made within Tube Distribution Units (TDU). TDU's are available as needed in various sizes as follows:

- Wall Mount, indoor TDU 16"H x 16"W x 4"D, 5 Lbs with a Tube Capacity for 42 Tubes – Sumitomo Part# DE06MDU
- Wall Mount, indoor NEMA 1-rated TDU 20"H x 20"W x 6.5"D, 27 Lbs with a Tube Capacity for 84 Tubes – Sumitomo Part# DE20IDU or equivalent
- Wall Mount, indoor NEMA 12-rated TDU 36"H x 30"W x 6.5"D, 70 Lbs with a Tube Capacity for 168 Tubes – Sumitomo Part# DE24IDU or equivalent
- For outdoor-rated TDU's, a Stainless Steel Hoffman box with rubber gasket and O-Ringed screws shall be used.

5.3.1.5 Tube Splicing

5.3.1.5.1 8mm straight tube couplers (Sumitomo part# DE08MC2) shall be used to splice (connect) two segments of tube cable; such as when making interconnections within TDU's or when connecting tubes to clear tubing.

Figure 9 - DE08MC2 Straight Tube Coupling (8mm)

5.3.1.5.2 8mm-to-5mm reducing tube couplers (Sumitomo part# DE05RC2) shall be used to splice (connect) a segment of 8mm tube cable to a segment of 5mm clear tube (e.g. when routing tubes into a fiber termination panel).

Figure 10 - DE05RC2 8mm-to-5mm Reducing Coupling (8mm)

5.3.1.5.3 Bulkhead Tube Coupler (Sumitomo part# DE08MB) shall be used to couple tubes segments passing through a TDU bulkhead.

Figure 11 - DE08MB Bulkhead Tube Coupler

5.3.1.5.4 Tube caps (Sumitomo part# DE08MA) shall be used to seal unused tubes.

Figure 12 - DE08MA Tube Cap to Seal Empty Tubes

5.3.2 Conventional Fiber Material

5.3.2.1 Cable

5.3.2.1.1 When used for indoor applications, use Corning MIC® DX armored plenum cables which are standard MIC subunits placed inside a dielectric armor for ruggedness and superior crush resistance without the conductive properties of traditional armor. These cables are designed for use in intra-building backbone and horizontal installations.

5.3.2.1.2 For Multi-Mode, use XXXT88-31180-D3 - MIC® DX Tight-Buffered Armored Cable, Plenum, 12 F, 50 µm multimode (OM3), where XXX represents the number of strands (in increments of 6).

5.3.2.1.3 For Single-Mode, use XXXE88-33131-D3 - MIC® DX Tight-Buffered Armored Cable, Plenum, 24 F, Single-mode (OS2), where XXX represents the number of strands (available in 6, 12 & 24 Strands).

5.3.2.1.4 When used for indoor/outdoor applications, use Corning FREEDM® loose tube gel-free plenum cables, which are flame-retardant, indoor/outdoor,

plenum-rated cables suitable for installation in inter-building and intra-building backbones in aerial, duct and riser or plenum applications.

5.3.2.1.5 For Multi-Mode, use XXXT8P-31180-29 - FREEDM® One Tight-Buffered Cable, Plenum, 12 F, 50 µm multimode (OM3), where XXX represents the number of strands (in increments of 6).

5.3.2.1.6 For Single-Mode, use XXXE8P-31131-29 - FREEDM® One Tight-Buffered Cable, Plenum, 24 F, Single-mode (OS2), where XXX represents the number of strands (available in 6, 12, 18 & 24 Strands).

5.3.2.1.7 When used for outdoor applications, use Corning ALTOS® all-dielectric gel-free cables, which are designed for outdoor and limited (up to total of 50') indoor use for campus backbones in lashed aerial and duct installations

5.3.2.1.8 For Multi-Mode use, 012TU4-T4180D20 - ALTOS® Loose Tube, Gel-Free Cable, 12 F, 50 µm multimode (OM3), where XXX represents the number of strands (in increments of 6).

5.3.2.1.9 For Single-Mode, use 060EU4-T4100D20 ALTOS® Loose Tube, Gel-Free Cable, 60 F, Single-mode (OS2), where XXX represents the number of strands (in increments of 6).

5.3.2.2 Fiber Preparation

5.3.2.2.1 Buffer Tube Fan-Out Kits shall be installed on the end of an ALTOS® Loose Tube fiber cables.

5.3.2.2.2 The following breakout kits shall be used when terminating fiber connectors directly onto a cable end that will be installed in an outdoor environment.

- 6-strand outdoor breakout kit – Part# FAN-OD25-06
- 12-strand outdoor breakout kit – Part# FAN-OD25-12

Figure 13 - FAN-OD25-12 Outdoor Breakout Kit

5.3.2.2.3 The following breakout kits shall be used when terminating fiber connectors directly onto a cable end that will be installed in an indoor environment.

- 6-strand indoor breakout kit – Part# FAN-BT25-06
- 12-strand indoor breakout kit – Part# FAN-BT25-12

Figure 14 - FAN-BT25-12 Indoor Breakout Kit

5.3.3 Pre-Terminated MPO Fiber Material

5.3.3.1 Trunk Cables

5.3.3.1.1 The advent of high speed (40/100 Gb) in backbone and server farm applications necessitates use of multi-pair fiber connections. To accommodate high pair counts, MPO (Multi-fiber Push On) type connectors

are used. Specifically an enhanced performance MTP® type MPO connector shall be used.

5.3.3.1.2 For relatively short runs of fiber where factory terminated connections are desirable such as in Server Farms, pre-terminated fiber trunk cables with non-pinned connectors shall be installed.

5.3.3.1.3 Ordering information for Corning MTP® Trunk cable is as follows:

- For Box 1 (**Grips**) select:
  A = Grip on one end only
  N = No grip
- For Box 2 & 3 (**MTP Connector type**) select:
  75 = 50 MM (OM3/OM4)
  90 = Single-mode (OS2)
- For Box 4 (**# Fibers**) select:
  12 = 12 fibers 72 = 72 fibers
  24 = 24 fibers 96 = 96 fibers
  36 = 36 fibers E4 = 144 fibers
  48 = 48 fibers
- For Box 5 (**Fiber type**) select:
  T = 50 multimode (OM3)
  Q = 50 multimode (OM4)
  G = Single-mode (OS2)
- For Box 6 (**Armored cable**) select:
  PN = Non-armored plenum
  AD = Armored plenum
- For Boxes 7 & 8 (**Furcation Leg Length**) select:
  A = 24”
  B = 36”
- For Box 9 (**Cable Length**) select:
  001-999
- For Box 10 (**Unit of Measure**) select:
  M = Meters
  F = Feet

5.3.3.1.4 For typical Server Farm Single-Mode applications, use Corning Part# A909024GPNBBUyyyF trunk cable (or equivalent), This corresponds to a Single-mode (OS2), non-Armored trunk cable with non-pinned MTP to non-pinned MTP connectors, 36” legs on both ends, with pulling grip at one end and where yyy represents the cable length.

Figure 15 - A909024GPNBBUyyyF

5.3.3.2 For typical Server Farm Multi-Mode applications, use Corning Part# A757524QPNBBUyyyF trunk cable (or equivalent), This corresponds to a Multi-mode (OM3), non-Armored trunk cable with non-pinned MTP to non-pinned MTP connectors, 36” legs on both ends, with pulling grip at one end and where yyy represents the cable length.

5.3.3.3 Coupler Panels

5.3.3.3.1 Where a limited number of trunk cables need to be installed, Corning Plug & Play™ Universal Module should be used to breakout the individual fiber strands onto LC connector couplers.

5.3.3.3.2 A Plug & Play Module (Corning Part# CCH-UM12-04-89G, CCH-UM24-04-89G) shall be used for 12-Strand and 24-strand SM Trank cables respectively.

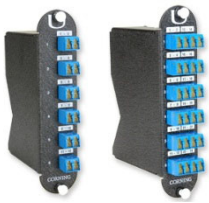

Figure 16 - CCH-UM12-04-89G, CCH-UM24-04-89G
Plug & Play™ Universal Module, 12 and 24 F,
Shuttered LC to MTP®, Single-mode (OS2)

5.3.3.3.3 A Plug & Play Module (Corning Part# CCH-UM12-05-93T, CCH-UM24-05-93T) shall be used for 12-Strand and 24-strand MM trunk cables respectively.

5.3.3.3.4 For trunk cables that contain more than 24 strands of fiber, a combination of 12 & 24 strand modules shall be used.

5.3.3.3.5 For applications that will require a large number of trunk cables or high strand count trunk cables, a MTP adapter panel should be used.

5.3.3.3.6 For SM (OS2) fiber Trunks use a CCH Panel with six MTP adapters (Corning Part# CCH-CP72-89).

Figure 17 - CCH-CP72-E3 –Closet Connector Housing (CCH) Panel
MTP® adapters, 72 F, Single-mode (OS2)

5.3.3.3.7 For MM fiber Trunks use a CCH Panel with six MTP adapters (Corning Part# CCH-CP72-89).

5.3.3.3.8 When CCH MTP panels are used, a female MTP fanout harness should be used to interface with equipment.

5.3.3.3.9 The MTP fanout harness cables are available as MTP to LC and MTP to SC in both SM (OS2) and MM (OM3) fiber.

5.3.3.3.10 These harnesses are available from various vendors such as:

- SANSPOT.COM
- FIBERTRONICS.COM
- LEVITON.COM

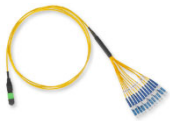

Figure 18 - MTP® to LC Single-mode (OS2) Fanout Cable

5.4 Fiber Installation Requirements

5.4.1 Sumitomo Air Blown Fiber Installation Requirements

5.4.1.1 Any deviation from the Sumitomo ABF installation requirements listed below, must receive prior approval from the CISD Project Manager. Deviations not receiving prior written approval will be subject to correction at the Contractors expense.

5.4.1.2 Tube cable shall be installed as described in the Sumitomo FutureFLEX Tube Cable Installation Procedure Document #SP-F04-008.

5.4.1.3 TP2 type tube cable shall be installed as described in the Sumitomo Recommended Procedure Document #SRP SP-F04-029 – Plenum-Rated Jacketed Tube Cable TCXXTP2 Installation Procedures.

5.4.1.4 All tube cables containing internal metallic elements (i.e. any cables with a -1 or -2 suffix) shall be properly grounded as described in the Sumitomo Recommended Procedure Document #SRP SP-F04-030 – Plenum-Grounding & Bonding Metallic Tube Cable Procedure using a DE09SBK Bonding Kit.

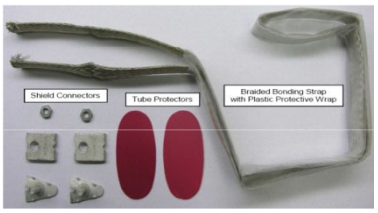

Figure 19 - DE09SBK Bonding Kit

5.4.1.5 Fiber bundles shall be installed in accordance with the Sumitomo Blowing Equipment Set-up and Fiber Bundle Installation Procedure Document SP-F04-001 & SP-F04-002.

5.4.1.6 Fiber bundle preparation for terminations shall be installed in accordance with the Field Termination Kit Installation Procedure Document SP-F04-010.

5.4.1.7 All vertical fiber runs shall have strain relief installed at a minimum of every 15 feet, using Single Weave Rod Closing Grips in accordance with the Kellems Grips Installation Procedure Document SP-F04-024.

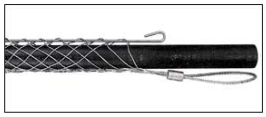

Figure 20 - Single Weave Rod Closing Strain Relief Grips

5.4.1.8 Vertical fiber runs that will attach to a Messenger Cable, shall utilize a Q Span Clamp attached to the messenger cable, to which the Kellems grip will attach.

Figure 21 - Q Span Clamp

5.4.1.9 Tube Cable entering an outdoor TDU, shall have strain relief applied using a **Liquid Tight Grips** fitting (see Figure 22A), attached to the TDU as detailed in Kellems Grips Installation Procedure Document SP-F04-024 and Table I.

5.4.1.10 Tube Cable entering an indoor TDU and that requires Strain Relief, shall have strain relief applied using a **Dust Tight Grips** fitting (see Figure 22B), attached to the TDU as detailed in Kellems Grips Installation Procedure Document SP-F04-037 and Table I.

5.4.1.11 Tube Cable entering an indoor TDU and that doesn't require Strain Relief, shall have strain relief applied using a **Cable Entry Seal** fitting (see Figure 22C), attached to the TDU as detailed in Kellems Grips Installation Procedure Document SP-F04-037 and Table I.

Figure 22A - Liquid Tight Grip

Figure 22B - Dust Tight Grip

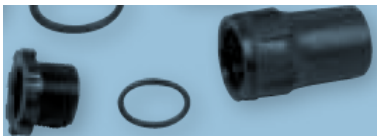

Figure 22C – Cable Entry Seal

5.4.1.12 See below for a complete list of SRP's (**S**umitomo **R**ecommended **P**rocedures

INDEX OF SUMITOMO RECOMMENDED PROCEDURES SP-F04-XXX

NO.	SUMITOMO RECOMMENDED PROCEDURE TITLE	ISSUE	REV
001	Blowing Equipment Set-up Procedure	08/13	19
002	Fiber Bundle Installation Procedure (with Addendum)	08/13	21
003	Tube Pressure Testing Procedure (with Addendum)	03/11	13
004	Tube Obstruction Testing Procedure (with Addendum)	03/11	14
005	Indoor, Wall-Mount TDU Installation Procedure	03/11	7
006	Fiber Bundle Stripping Procedure	03/11	6
008	Tube Cable Installation Procedures	03/11	8
010	Field Termination Kit Procedure for FTFLD02 thru FTFLD18 900µm Sub-Unit Kits	03/11	6
011	Restoration Procedure - Dielectric Tube Cables & Tube Cable Splice Kits	03/11	5
012	Restoration Procedure – Armored Tube Cables & Splice Case Kits	03/11	3
013	Rack-Mount Tube Cable Termination Panel Assembly Procedure	03/11	5
015	Splice Case Kit Installation Procedures	09/11	10
016	Tube Cable Splice Kit Installation Procedure	03/11	8
019	Tube & Tube Cable Sealing Procedures	03/11	5
024	Installation Procedures for Liquid-Tight Kellems® Grips	08/13	13
025	Fiber Bundle Removal Procedure	08/13	8
026	Tandem Blowing Procedure	08/13	10
027	Mid-Span Blowing with a Figure 8 Procedure	08/13	10
028	Segment Blowing with a Figure 8 Procedure	08/13	10
029	Plenum-Rated Jacketed Tube Cable TCxxTP2 Installation Procedures	03/11	5
030	Grounding & Bonding Armored Tube Cable Procedures	03/11	3
031	Tube Cable Splicing Procedures	03/11	3
032	Sealing Procedures for FutureFLEX Tube Cables Located in Class I, Division 1 & 2 Environments (with Addendum)	03/11	7
033	Sealing Procedures for FutureFLEX Tubes Located In Class I, Division 1 & 2 Environments	03/11	3
036	Field Termination Kit Procedure for FTFLD24 900µm Sub-Unit Kit	03/11	2
037	Installation Procedures for Strain Relief Kellems Grips	01/12	4
038	Installation Procedures for Cable Entry Seals	03/11	3
039	Armored Tube Cable Installation Procedures	03/11	0

Sumitomo Electric Lightwave reserves the right to improve or modify these specifications without notice.

Figure 23 - Master List of SRP's

5.4.1.13 Tube cable shall be installed such that it is supported using cable hangers at 5' intervals. This support may consist of cable runway, conduit and/or split Inner-duct with J-hooks as applicable, but in a manner that does not void Sumitomo extended warranty.

5.4.1.14 Tube cable runs in areas where cable hangers cannot be installed at 5' intervals shall utilize messenger wire and ring baskets or equivalent means.

5.4.1.15 Aerial portions of tube cable runs shall utilize messenger wire and ring baskets or equivalent means.

5.4.1.16 A minimum bend radius of 20 times the cables outer diameter shall be adhered to throughout the pull of the cable. A minimum bend radius of 10 times the cables outer diameter shall be adhered to at final installation position. Bends should not exceed 90 degrees during pull or final installations (see Attachment 2 Figure 10 for an illustration of proper and improper bend radius).

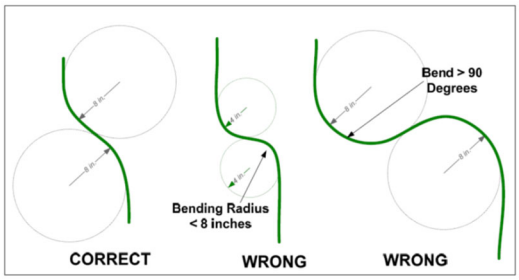

Figure 24 - Example of the correct way to measure a minimum bend radius

5.4.1.17 TP2 Jacketed Plenum-rated Tube cable shall never be installed with any portion of the tube cable resting on a horizontal surface, unless it is enclosed in conduit or split Inner-duct.

5.4.1.18 When in-line tube cable splicing is required, it shall be done utilizing a 4” by 4” by 2’ Wireway with screw down cover and end caps, Milbank Part# 4424-GHC1-NK & 44GE-NK or equivalent.

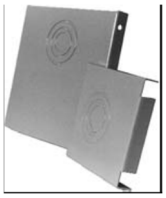

Figure 25 - Milbank 4424-GHC1-NK
4” by 4” by 24” GHC1 Lay-In Wireway Type 1 (No Knockouts) and
44GE-NK – 4” by 4” End Cap (No Knockouts)

5.4.1.19 Wireway must be fixed to a solid surface or solidly supported by pencil rods. Holes shall be punched in both end caps to accommodate a properly sized Kellems grip based on the type & size tube cable.

5.4.1.20 Within the wireway, the tube cable outer jacketing shall be removed to expose individual tubes. Each tube shall have a label applied to the tube that clearly indicates the tube number. Labels shall consist of Panduit PAN Code Labels Part# PCMB-1 or equivalent (see Attachment Figure 4)

Figure 26 - Panduit PCMB-1 - Wire Marker Book, Vinyl Cloth, '0-9', 10 Pg

5.4.1.21 Tubes shall be coupled using a straight tube coupler. Splices should be installed in a staggered fashion, so that they don't bunch together as illustrated below.

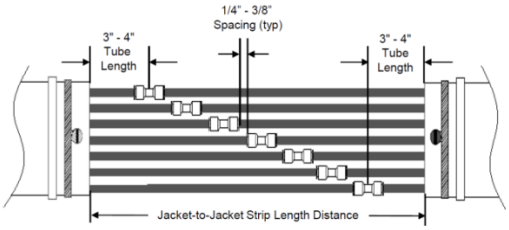

Figure 27 – Spliced Tube – Coupler spacing

5.4.1.22 When tube cable jacket is removed, such as in a TDU, Splice box or at the rack, the spaces in and around the tubes, should be filled with either a silicone based product or a fire-stop material. This is required to prevent smoke from using the tube cable as a pathway for smoke spreading to other areas.

5.4.1.23 Tubing shall be square cut prior to installing couplers using a tubing cutter (e.g. Sumitomo part# BETC001 or equivalent)

Figure 28 - BETC001 Tubing Cutter

5.4.1.24 When coupling tubes within a TDU in preparation for blowing fiber, a pair of couplers and a segment of 8mm clear tube cable (Sumitomo Part# TC01TCX) shall be installed between the two tubes. Pre-numbered vinyl cloth based Wraparound labels should be attached to each end of the translucent tube with

the label number indicating the tube number it is being coupled to (See Attachment 2 Figure 1).

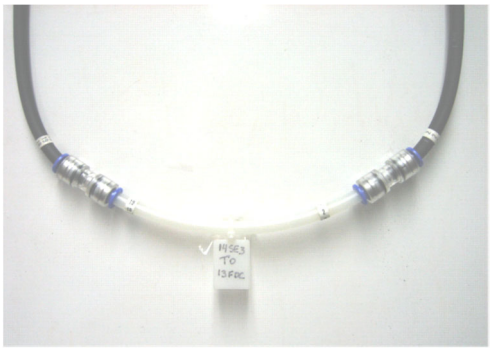

Figure 29 Sample of coupled tubes with translucent tube and labels

5.4.1.25 When a single 8mm clear tube (Sumitomo Part# TC01TCX) is brought directly into a TDU, a Bulkhead Tube Coupler (Sumitomo part# DE08MB) shall be used to couple tube to a second segment of tube within the TDU.

5.4.1.26 When routing tube cables into their respective racks, they shall be bundled and lashed to cable runways, utilizing Velcro straps only. Never use Nylon Tie-Wraps on TP2 type cable, even as a temporary support measure during installation.

5.4.1.27 Tube cable entering a cabinet; shall have the outer jacket surrounding the individual tubes removed within 12 inches after entering the cabinet.

5.4.1.28 When tube cable is brought to a rack, the outer jacket surrounding the individual tubes shall be removed within 12 inches before reaching the rack. When using a metallic jacketed tube cable, the jacket shall be removed within 2 feet from the entry into the room. The Braided Bonding Straps that are part of the DE09SBK Bonding Kit shall be bonded to a #4AWG green jacketed stranded wire, which in turn is bonded to the room's Master Ground Bar (MGB) at each end of the tube cable.

5.4.1.29 Individual tubes shall extend beyond the outer jacket separated by 1.5 inches in a staggered fashion, as follows:

- Tube #1: 3“ Tube #8: 3” Tube #14: 3”
- Tube #2: 4.5” Tube #9: 4.5” Tube #15: 4.5”
- Tube #3: 6” Tube #10: 6” Tube #16: 6”
- Tube #4: 7.5” Tube #11: 7.5” Tube #17: 7.5”
- Tube #5: 9” Tube #12: 9” Tube #18: 9”
- Tube #6: 10.5” Tube #13: 10.5” Tube #19: 10.5”
- Tube #7: 12”

5.4.1.30 8mm clear tubing (Sumitomo part# TC01TCX) shall be connected to the inner tubes of a tube cable using tube couplers to extend the tubes to racks.

5.4.1.31 5mm clear tubing (Sumitomo part# TC01T5M) shall be connected to the inner tubes of a tube cable using 8mm-to-5mm reducing couplers, to extend the tubes to into fiber termination panels.

5.4.1.32 All unused tubes shall be capped with a tube cap (Sumitomo part# DE08MA). This is required to prevent dirt or bugs from entering the tube. More importantly, this is required to prevent smoke from using the tube as a pathway for smoke spreading to other areas.

5.4.1.33 A service loop consisting of one 18” diameter coil of clear tubing shall be installed on the ladder leading to a rack or cabinet.

5.4.2 Conventional Fiber Installation Guidelines

5.4.2.1 Always follow the cable manufacturer's recommendations. Fiber optic cable is often custom-designed for a specific type of installation and the manufacturer may have specific instructions on its installation.

5.4.2.2 When installing fiber, never directly pull on the fiber itself; pull on the fiber cable strength members only!

5.4.2.3 Never exceed the maximum pulling load rating. On long runs, use proper lubricants and make sure they are compatible with the cable jacket. On exceptionally long runs pull from the middle out to both ends. If possible, use an automated puller with tension control or at least a breakaway pulling eye. Know and observe the maximum recommended load rating of the cable.

5.4.2.4 Never exceed the cable bend radius. Fiber is strong when you pull it straight, but it breaks easily when bent too tightly. Damage to the fibers may be immediate or may take a few years to develop, but will require replacement in any case.

5.4.2.5 In tray and rack installations, the minimum bend radius must also be monitored, because the cable will be routed around corners or through transitions. Where raceway or rack transitions expose the cable, flexible conduit such as Innerduct should be used for protection.

5.4.2.6 Always roll the cable off the spool instead of spinning it off the spool end to prevent putting a twist in the cable for every turn on the spool. Putting a twist in the cable can adversely stress the fibers.

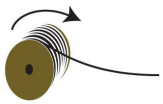

Figure 30 – Cable Unspooling

5.4.2.7 Unless space is an issue, fiber shall be installed in Innerduct. It provides a good way to identify fiber optic cable and protect it from damage. Innerduct is available with pulling tape already installed.

5.4.2.8 When fiber is pulled through conduit or duct, use fiber optic cable lubricant. Lubrication reduces the pulling load and the chance of breakage. The lubricant must be compatible with the cable jacket material.

5.4.2.9 Comply with vertical rise limits. Know and observe the maximum vertical rise distance limit. Exceeding this limit may result in fiber breakage, excess attenuation, and, in loose tube cables, fibers sliding from cables. Cables in vertical installations that are longer than the vertical rise limit must be tied off at distances less than this limit. Loose tube cables must be looped.

5.4.2.10 Support cables at frequent intervals to prevent excess stress on the jacket. Support can be provided by Hook-and-loop fastener ties are preferred for fiber optic cables, as they cannot apply crush loads sufficient to harm the cable or Kellems grips.

5.4.2.11 Drop vertical cables down rather than pulling them up whenever possible.

5.4.2.12 Allow for thermal expansion and contraction. In outdoor installations, allow for 2.5 foot sag per 150 foot span for thermal expansion and contraction. Failure to allow for thermal expansion may result in increased attenuation and breakage of fibers.

5.4.2.13 Check fiber continuity and attenuation. These checks should be performed as-received/before installation, after installation, after splicing, and after connector installation. This helps prevent wasted effort resulting from faulty cable or pulls.

5.4.2.14 Mark cable as “Fiber Optic Cable” in all locations in which it can be easily reached. Such marking will alert others to the nature of the cable.

5.4.2.15 Leave service loops 20-30 feet near the ends and mid-span on very long runs. Service loops allow the pull of the excess fiber into a location where a repair may be required.

5.4.2.16 Prevent heavy objects such as vehicles or heavy cable reels from rolling over the fiber cable.

5.4.2.17 When outdoor rated fiber cable enters a building, it should be spliced to an indoor-type fiber cable within 50 feet from the cable entrance to meet NEC code.

5.4.2.18 Design conduit runs with as few bends as possible. If a large number of bends are required in the run, install junction boxes to reduce the number of bends.

5.4.2.19 Use plastic bushings on conduit ends to avoid damage to the cable during the pull.

Figure 31 – Plastic Bushing

5.4.2.20 For cables using aramid yarn alone as the strength member, the jacket should be removed to expose the yarn. The yarn should be tied in a knot with the pull rope, so that the jacket will not be inadvertently used for strength. Optionally, the jacket can be tied into a tight knot before pulling. After pulling, the knot should be cut off.

Figure 32 – Knotted Cable

5.4.2.21 For cables using aramid yarn and a fiberglass central member, a pulling grip should be used. The strength member should be attached independently. This can be accomplished by weaving the strength member into the fingers of the grip, and then taping it together. All strength members should be gripped equally to ensure proper distribution of tension.

Figure 33 – Cable Pulling Grip

5.4.2.22 Always use a swivel pulling eye because pulling tension will cause twisting forces on the cable.

Figure 34 – Swivel Pulling Eye

5.4.2.23 Make every effort to pull cables from a conduit in as straight an angle as possible. Pulling on an angle can cause damage to the cable.

5.4.2.24 Maintain proper clearance between the fiber optic cable and power cable at all times. Always make allowances for power cable sag due to weather and current conditions. Cable sag increases in warm weather or when power cable is passing heavy current.

5.4.2.25 When a steel messenger wire is used for aerial installation, avoid installing the messenger wire in zigzag fashion from one pole side to the other. Instead, make sure it is kept on one side as much as possible

5.4.2.26 Cables should never be allowed to hang freely for long distances or to press against edges in an installation.

5.4.2.27 For horizontal conduit runs, length should be limited to 100 feet, with no more than two 90-degree bends between pull points or boxes.

5.4.2.28 Pull boxes should not be used for splicing cable.

5.4.2.29 Requirements for conduit installation and sizing as stated in the Electronic Industries Association/Telecommunications Industry Association 569 standard should be followed.

5.4.2.30 When Plenum runs or runs in dropped ceilings or raised floors are used for environmental air handling, the fiber cable must be plenum-rated.

5.4.2.31 Cables in these spaces should be supported in some way, ideally in organized, easy-maintenance trays, wireways or racks. At the very least, cables can be supported by I-hooks or bridle rings.

5.4.2.32 While cable trays provide sturdy support and basic protection for cable, there are still stresses to which the cable may be subjected. Routes should be inspected for sharp turns, snags (sometimes from other cables) and rough surfaces. Run fiber cable without pulling it under or between heavier cable and multiple cables that may stress the fiber.

5.4.2.33 For installations that require that the cable be installed in risers, use a cable rated as OFNR, at a minimum.

5.4.3 Pre-Terminated Fiber Installation Guidelines

5.4.3.1 Cables shall be installed in cable trays or runway.

5.4.3.2 Cables shall not be pulled; rather they shall be laid onto runway.

5.4.3.3 While cable trays provide sturdy support and basic protection for cable, there are still stresses to which the cable may be subjected. Routes should be inspected for sharp turns, snags (sometimes from other cables) and rough surfaces.

5.4.3.4 Cable must not be installed under or between heavier cable and multiple cables that may stress the fiber.

5.5 Fiber Termination Requirements

5.5.1 The contractor shall terminate multi-mode fiber using Corning UniCam ceramic LC Connectors (Corning part # 95-050-99).

Figure 35 - Corning 95-050-99 LC Unicam Fiber connector

5.5.2 The contractor shall terminate all single-mode fiber using a fusion splice method.

5.5.3 The contractor shall obtain prior training from Sumitomo in the proper methodology for using and splicing the LYNX2 connectors.

5.5.4 The Single-Mode fiber shall be spliced onto Sumitomo part# LYNX2-LCUPCSM-900LT splice-on LC connectors. This connector comes as a kit that includes the connector, an integral fiber pigtail as well as a heat shrink splice protector.

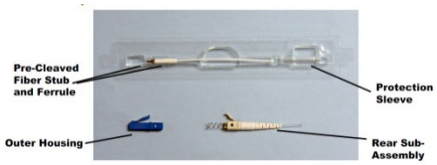

Figure 36 – Sumitomo LYNX2-LCUPCSM-900LT splice-on LC connector

5.5.5 The LYNX2 connector splice is applied to the Single-Mode fiber using a Sumitomo TYPE 25e or equivalent Sumitomo approved Fusion Splicer.

Figure 37 - Sumitomo TYPE 25e Fusion Splicer

5.5.6 Terminated Multimode and Single-Mode fiber shall be connected to coupler panels. Acceptable coupler panels are available in two sizes, either 12 or 24 LC duplex fiber couplers.

5.5.7 The 12-fiber adapter panels shall be used to support the 6 and 12-strand multi-mode fiber bundles. When used for a 6-strand fiber bundle, panel label shall indicate that the last three couplers are blank

5.5.8 The 24-fiber adapter panels shall be used to support the 18 and 24-strand multi-mode fiber bundles. When used for a 18-strand fiber bundle, panel label shall indicate that the last three couplers are blank.

5.5.9 Pre-terminated fiber shall be installed onto the rear of a Plug & Play™ Universal Module.

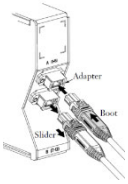

Figure 38 – Rear view of a Corning Plug & Play™ Universal Module

5.5.10 Coupler panels shall be installed in a Corning PCH Pretium connector housing. Use Part# PCH-04U to support up to twelve coupler panels. When space is limited, use a Corning part# CCH-03U, where six or less coupler panels are required, a PCH-02U where four or less couplers are required or a PCH-01U where two or less coupler panels are required. If space is not available for 19” rack mount housings, use a SPH-01P for a single coupler panel.

Figure 39 - Corning PCH-04U, CCH-04U, CCH-03U & SPH-01P Fiber Coupler Housings

5.6 Testing Requirements

5.6.1 Following tube cable installation, a pressure test shall be performed for all tubes within a cable as described in the Sumitomo FutureFLEX Tube Pressure Testing Procedure Document SP-F04-003.

5.6.2 Following tube cable pressure testing, a plastic bead obstruction test shall be performed for all tubes within a cable as described in the Sumitomo FutureFLEX Tube Obstruction Testing Procedure Document SP-F04-004. **Please note:** When performing obstruction testing on TP2 Type cable, a 4mm OD Plastic Bead must be used for the obstruction test. All other tube cables are tested with a 5mm Bead

5.6.3 Prior to any fiber blow, a pressure and plastic bead obstruction test shall be performed on the complete tube circuit.

5.6.4 All ABF fiber cable shall be tested as required to qualify for Sumitomo Extended Warranty.

5.6.5 Multi-Mode Fiber terminations shall be tested using a dB attenuation loss meter.

5.6.6 Single-Mode Fiber terminations shall be tested using an OTDR and dB attenuation loss meter.

5.7 Fiber Labeling and Documentation Requirements

5.7.1 A label shall be applied to the lower left corner of a TDU when it is installed. It shall include the following information, Spec or MiniPO# under which the TDU was installed, date the TDU was installed, and a three letter designation assigned by Con Edison to each Contractor. As an example: ACME Fiber Installers (AFI) that installed TDU on 2/19/07 as part of Spec Job 291, states the following on the label: **Installed by: AFI on 02/19/07 – Spec 291.** Font size for this should be no smaller than 8 points.

5.7.2 Panduit label (Part# PST-FO - Self-Laminating Rigid Vinyl Fiber Cable Marker Tags for large cables and bundles - 3.00" x 1.31" - Yellow shall be used to identify Tube Cable.

Figure 40 - Panduit PC4 PST-FO - Self-Laminating Rigid Vinyl Fiber Cable Marker Tags

5.7.3 Tags attached to TP2 type cable shall not use Tie-Wraps, but shall use Velcro strips.

5.7.4 Tags shall be attached to Tube Cable as follows:

- At 25-foot intervals
- At every hand-hold in a Lock-Tile ceiling
- Mid-span at every floor in a riser shaft
- Where the fiber enters and exits a penetration
- At the termination points within TDU's and cabinets.

5.7.5 The tube cable label shall indicate the designation of the two locations between which the tube cable runs. As an example a tube cable running between 17NW1 WDC and the 18th Floor TDU in the South Shaft would have the following label: **17NW1 WDC to 18Fl South Shaft TDU**. Font size for this line should be no smaller than 14 points.

5.7.6 The tube cable label shall also include the following information, Spec or MiniPO# under which the cable was installed, date the tube cable was installed, and a three letter designation assigned by Con Edison to each Contractor. As an example: ACME Fiber Installers (AFI) that installed tube cable on 2/19/07 as part of Spec Job 291, add the following to the labels: **Installed by: AFI on 02/19/07 – Spec 291.** Font size for this should be no smaller than 8 points.

5.7.7 The above information should be included on every tag affixed to the tube cable. Please ensure that the label faces forward.

5.7.8 TP2 Tube Cable within a riser shaft shall have a Panduit label (Part# PST-FO - Self-Laminating Rigid Vinyl Fiber Cable Marker Tags attached to it at mid-span at every floor. The label shall indicate the following in bold lettering: **CAUTION: Do not use Nylon Tie Wraps to bundle this cable.** The font size on the label should be at least 14 points for readability. Please ensure that the label is securely fastened with Velcro type strap to the tube cable and faces forward.

5.7.9 Each tube in a tube cable shall have a label applied to the tube that clearly indicates the tube number. Labels shall consist of Panduit PAN Code Labels Part# PCMB-1 or equivalent (see Attachment 2 Figure 4). These are vinyl cloth based Wraparound labels imprinted with numbers 0-9. The tube # shall be visible without requiring the rotation or bending of the tube.

Figure 41 - Panduit PCMB-1 - Wire Marker Book, Vinyl Cloth, '0-9'

5.7.10 A Flag type marker tie, Panduit part# PLF1MA (see Attachment 2 figure 11) shall be attached to the segment of translucent tube that is installed between two tubes within

a TDU. The translucent tube shall be annotated with a permanent marker to indicate the “From” and “To” locations of the complete tube circuit. As an example a tube circuit containing a fiber running between 14SE3 WDC and 13th Floor Fiber distribution Center would have the text on the marker tie: 14SE3 to 13FDC.

Figure 42 - Panduit PLF1MA Flag type Marker Tie

5.7.11 All splice housings and connector housings shall be labeled with P-Touch type labels (labels should be 1/2" high, black lettering on yellow background, font should be Arial or a similar non-serif type font and Font size should be at least 12 points). The label shall also include the following information, Spec or MiniPO# under which the cable was terminated and the date, as well as the three letter designation assigned by Con Edison to each Contractor. As an example: ACME Fiber Installers (AFI) that terminates a fiber bundle on 2/19/07 as part of Spec Job 291, add the following to the labels: **Installed by: AFI on 02/19/07 – Spec 291.** Font size for this should be no smaller than 6 points.

5.7.12 Labels should be attached horizontally to the front panel. Labels shall start at the top left and proceed to the bottom right.

5.7.13 There should be a label for each installed coupler panel. Label should indicate the Slot, Strand count, fiber type (MM or SM), and the location of the other end of the cable. Labels shall have a Font size no smaller than 8 points.

5.7.14 All fiber cable shall be documented as required by Sumitomo to qualify for their Extended Warranty.

5.7.15 A tube cable installation report shall be prepared in an Excel spreadsheet and shall contain a row for each tube cable installed for a particular project, with the following information:

- **Page Heading:** The first line should state the Report Name “TUBE CABLE INSTALLATION REPORT”. The second line shall indicate the Spec or MiniPO number, the Order Release #, Contractor’s Name and the date project was completed. The third line shall contain a one line description of the job.
- **Columns as follows:**
- Type of tube cable (e.g. TRX, TP2, etc…)
- Tube count (i.e. 1, 2, 3, 4, 7, 19)
- From location room designation & endpoint (e.g. 17SW1-TDU 3 or Fiber Hut-Rack 5)
- To location room designation & endpoint (e.g. 13FDC-TDU 5 or DC1 BB-Rack 11)
- Length of tube cable based on cable jacket footage markers.

  See Attachment 1 for a sample report

5.7.16 Report shall be submitted electronically to the CISD Project manager within one week of project completion.

5.7.17 dB loss results should be submitted electronically in an Excel spreadsheet to the CISD Project manager within one week of project completion.

5.7.18 OTDR Test results in the Test equipment's native results format including the reader program shall be submitted on CD, to the CISD Project manager within two weeks of project completion.

5.7.19 A copy of the, Warranty Submittal letter to Sumitomo, shall be submitted to the CISD Project manager within two weeks of project completion.

5.8 Attachments

5.8.1 Sample Tube Cable Installation Report

TUBE CABLE INSTALLATION REPORT
MiniPO #2042 - OR# 819-09-1427 - ACME Fiber Installers - July 24, 2009
Install Tube cable to support a new Fiber Channel Cabinet in 229 14th Avenue - Data Center 2

Tube Cable Type	Number of Tubes	Tube End Number 1	Tube End Number 2	Tube Cable Length (Ft)
TP2	7	TDU 17N in "Q" Riser Shaft	Cabinet 27 (Fiber Channel cab) in Data Center 2	247
TRX	19	TDU 13N in "Q" Riser Shaft	TDU 17N in "Q" Riser Shaft	65
TRX	19	TDU 7N in "Q" Riser Shaft	TDU 13N in "Q" Riser Shaft	130

5.9 Change Log

Date	Author	Rev #	Comments
6/10/22	Michael Ribarich	02	Added Change Log. Formatting. Changed references from LIS to CISD. Also changed references from IR to IT.

SPECIFICATION NO. IT-CISD-TGB-STD-11

Consolidated Edison Company of New York
4 Irving Place, New York, New York 10003

Information Technology
Communications Infrastructure & Site Design
(CISD)

DESCRIPTION

Standard Specification for Installation of
LAN Telecommunications Grounding & Bonding (TGB)

Prepared By:	Ron Devito Systems Specialist	Date: April 4, 2022
Reviewed By:	Michael J. Ribarich Systems Manager	Date: June 10, 2022
Approved By:	Michael J. Ribarich Systems Manager	Date: August 8 10, 2022

Printed on 9/9/2022

Table of Contents

1.0 PURPOSE 3
2.0 APPLICABILITY 3
3.0 USERS, REVIEWERS AND APPROVERS 3
4.0 EXCEPTIONS / DEVIATION PROCESS 3
5.0 TECHNICAL REQUIREMENTS 4
5.1 Technical Scope 4
5.2 Ground Cable Pathways 4
5.3 Telecommunications Grounding and Bonding 4
5.3.1 Approved Materials and Substitutions 4
5.3.2 Grounding Conductor (GrC) 4
5.3.3 Single Point Ground Bar (SPGB) 5
5.3.4 Master Ground Bar (MGB) 6
5.3.5 Equipment Ground Bar (EGB) 8
5.3.6 Floor Ground Bar (FGB) 8
5.3.7 Horizontal Rack-mount Ground Bar (HRGB) 9
5.3.8 Bonding to Bus Bars 10
5.3.9 Bonding Cables and Lugs 13
5.3.10 Equipment Cabinet Bonding Methodology 14
5.3.11 Equipment Isolation Methodology 15
5.3.12 Single Small Cabinet Installations 16
5.3.13 Outdoor Rated Cat/5e Grounding at a POE 17

1.0 PURPOSE

1.1 This specification provides the technical requirements for the design and installation of telecommunication grounding and bonding systems withing IT rooms and spaces.

2.0 APPLICABILITY

2.1 This specification applies to corporate sites, control, centers, data centers and field sites.

3.0 USERS, REVIEWERS AND APPROVERS

3.1 The users of this specification are members of IT Communications Infrastructure & Site Design (CISD) group responsible for the design and build of LAN physical infrastructure including telecommunication grounding and bonding systems. Other users are contractors who design and build telecommunication grounding and bonding systems.

3.2 The approver of the document is the CISD Systems Manager. CISD SMEs will propose changes to the CISD Systems Manager. Revised documents will be placed in group's SharePoint public folder.

3.3 The review process is ongoing as new parts and technologies develop and are utilized. A formal review will take place annually in January by the CISD group to capture any changes that may not yet been incorporated.

3.4 Training requirements will be met by formal technical training by outside by internal on the job training, and group collaboration.

4.0 EXCEPTIONS / DEVIATION PROCESS

4.1 CISD will follow a review and approval process for interim changes required during emergent situations.

4.2 Interim changes will be handled by email or verbal notification by the CISD Systems Manager and/or CISD SMEs.

4.3 The process and forum for communicating Interim changes will be periodic staff meetings or by teleconference scheduled by the CISD Systems Manager.

5.0 TECHNICAL REQUIREMENTS

5.1 Technical Scope

5.1.1 Unless otherwise stated in the bid specification or MiniPO, the work to be done by the Contractor as described in the Scope of Work section of the project specification (bid spec or MiniPO) shall be done in accordance with the requirements set forth in this document

5.1.2 Any deviation from the CISD materials and installation requirements listed below, must receive prior approval from the CISD project manager. Deviations not receiving prior written approval will be subject to replacement and/or correction at the Contractors expense.

5.2 Ground Cable Pathways

5.2.1 The CISD project manager is responsible for identifying preliminary ground cable pathways.

5.2.2 Since the pathways provided by the CISD project manager are preliminary, it is the Contractors responsibility to develop a defined cable pathway.

5.2.3 The pathways provided by the CISD Project manager are preliminary. It is the Contractors responsibility to ensure that NEC Code permits the pathways.

5.3 Telecommunications Grounding and Bonding

5.3.1 Approved Materials and Substitutions

5.3.1.1 All materials specified in the document shall be provided and installed by the installation contractor as indicated, using the listed parts. Equivalent parts may be supplied by providing the part specification sheet for review and obtaining written approval from the CISD project manager.

5.3.2 Grounding Conductor (GrC)

5.3.2.1 A Grounding Conductor shall be installed for all newly constructed and upgraded LAN Rooms. The term LAN Room applies to IT spaces housing LAN racks, cabinets, cable runway and equipment and can range in size to single wall-mount cabinets to multi-cabinet data centers.

5.3.2.2 Con Edison personnel or a designated Contractor shall be responsible for installing the grounding conductor as directed below.

5.3.2.3 Where a dedicated 4/0 AWG Communications Ground Riser exists:

5.3.2.3.1 A Grounding Conductor (GrC) consisting of a 4/0 AWG green insulated stranded copper wire shall be fused to the dedicated riser using a CADWELD process.

5.3.2.3.2 The weld between the GrC and the riser must remain visible for future inspection.

5.3.2.3.3 The GrC shall be routed to the LAN Room via the most direct route.

5.3.2.3.4 While routing the GrC to the LAN Room, it is imperative that there shall be no sharp bends in the cable.

5.3.2.3.5 The cable shall be electrically isolated from all structural metal. This includes concrete walls that may contain metal rebar.

5.3.2.3.6 The end of the GrC, minimally 5’ in length, shall be brought into the LAN Room.

5.3.2.3.7 A durable tag shall be affixed to the GrC that clearly notes the location of the weld to the Ground Riser.

5.3.2.4 Where there is no dedicated 4/0 AWG Communications Ground Riser:

5.3.2.4.1 Con Edison or their designated Contractor shall identify a main steel column or a steel beam that has electrical continuity with a main steel column.

5.3.2.4.2 Identify a clearly visible 3” by 3” section of building steel within the LAN Room and clear it of any insulating material (e.g. concrete, rust, paint, etc).

5.3.2.4.3 A 5’ length of GrC shall be fused to the previously cleared Building steel using a CADWELD process.

5.3.2.4.4 The weld between the GrC and the steel must remain visible for future inspection.

5.3.2.5 For either new construction or retrofit situations, where it is neither possible nor practical to use a CADWELD process due to potential fire or sparking damage, Contractor shall consult with and receive written approval from IT to use the following alternative method:

5.3.2.5.1 Con Edison personnel or a designated Contractor shall identify a main steel column or a steel beam that has electrical continuity with a main steel column.

5.3.2.5.2 Identify a 3” by 3” section of building steel that can be made easily accessible and clearly visible, within or as close to the LAN Room as possible.

5.3.2.5.3 Clear the section of any insulating material (e.g. concrete, rust, paint, etc.).

5.3.2.5.4 A 5’ length of 4/0 AWG Green insulated wire shall be high pressure crimped to a Thomas & Betts (Part# IBG20-40) I-Beam Ground Clamp’s lug. The Contractor shall attach the clamp and lug to building steel, ensuring that it is firmly attached and cannot be moved - see Figure 5.3.1.

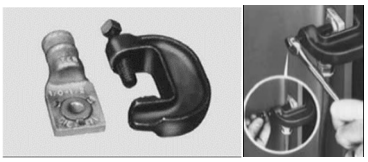

Figure 5.3.1

5.3.2.6 All deviations from the previously specified methodologies must be approved by the CISD PM, in writing, prior to proceeding. Failure to do so may require that the Contractor redo the work at the Contractors cost.

5.3.2.7 A bond resistance test shall be performed on the GrC using an AEMC Model 3731 Ground Resistance Tester or equivalent. Ground resistance shall not exceed 0.2 Ohms.

5.3.3 Single Point Ground Bar (SPGB)

5.3.3.1 An Un-sequenced Exterior Building Single Point Ground Bar (SPGB) (Harger Part# GBITP14412CE) Ground bar with wall mounting brackets, insulators and a 15’ exothermically bonded 2/0 AWG Stranded tail - see Figure 5.3.2 shall be installed in proximity (within 15 feet) to the GrC.

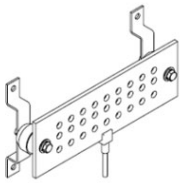

Figure 5.3.2

5.3.3.2 The Single Point Ground Bar shall be equipped with a Plexiglas cover with “SPGB” or “Single Point Ground Bar” stenciled on it - see Figure 5.3.3. The cover shall be stood-off the SPGB using insulated standoffs.

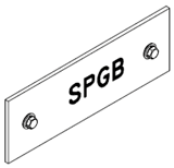

Figure 5.3.3

5.3.3.3 The 2/0 Stranded Copper CadWelded Tail shall be no longer than 15 feet.

5.3.3.4 The un-insulated stranded tail shall be electrically isolated from all structural metal. This includes concrete walls that may contain metal rebar.

5.3.4 Master Ground Bar (MGB)

5.3.4.1 A wall-mounted Master Ground Bar (MGB) with insulators (Harger Part# GPIB14420MMGB) - Universal 4" x 20" x 1/4" solid copper ground bar with 44 pairs of 7/16" pre-drilled universal lug holes, includes insulated mounting hardware - see Figure 5.3.4, shall be installed in the LAN Room, in a location specified in the Work Scope section of the job specific specification. The MGB shall contain pre-drilled double holes to accommodate two-hole lugs.

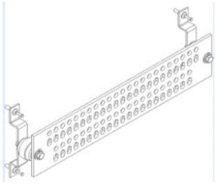

Figure 5.3.4

5.3.4.2 The MGB shall be equipped with a Plexiglas cover with “MGB” or “Master Ground Bar” stenciled on it - see Figure 5.3.5. The cover shall be stood-off the MGB using insulated standoffs.

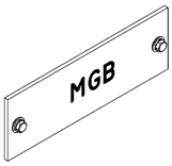

Figure 5.3.5

5.3.4.3 The MGB shall be installed below the SPGB if the GrC comes from above. The MGB shall be installed above the SPGB if the GrC comes from below.

5.3.4.4 The MGB hole patterns are organized in a “PANI” layout as shown in Figure 5.3.6

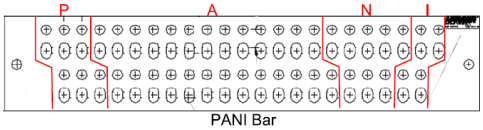

PANI Bar
Configuration
Layout

Figure 5.3.6

5.3.4.5 Each section on the PANI Bar may be expanded or contracted as needed, however the order cannot change. Lines shall be durably marked on the MGB in Red, delineating each PANI section (as show in the figure above).

5.3.4.6 The following ruleset shall be applied in determining the proper location on the PANI bar to which equipment or systems shall be connected - see Figure 5.3.13.

5.3.4.6.1 If the equipment or system can produce surge currents, carry surge currents, or carry lightning into a communications room, but is not designed to absorb and dissipate current, it shall be connected to the ‘P’ (**P**roducer) section of the MGB.

5.3.4.6.2 If the equipment is designed to absorb and dissipate fault current and lightning, or is inherently an alternate path to such system, it shall be connected to the ‘A’ (**A**bsorber) section of the MGB. The distinction here is that a ground to the MGB for AC-powered equipment, in which the AC Equipment Ground (ACEG) and ground to MGB are bonded together at the equipment through the chassis, is inherently an alternate path to the AC panel-board’s ground conductor. As such, it is classified as an absorber.

5.3.4.6.3 If the equipment is AC powered and the ACEG is isolated from the chassis and ground wire to the MGB, it shall be connected to the ‘N’ (**N**eutral) section of the MGB.

5.3.4.6.4 If the equipment is passive and is not connected to a piece of equipment or system that is connected to the AC panel-board ground, the equipment shall be connected to the ‘N’ section of the MGB.

5.3.4.6.5 If the equipment is passive and is connected to a piece of equipment or system that is connected to the AC panel-board ground and, the equipment shall be connected to the ‘A’ section of the MGB.

5.3.4.6.6 If the device is a ground bar for an intentional and properly designed Isolated Ground Zone (IGZ), it shall be connected to the ‘I’ (**I**solated) section of the MGB.

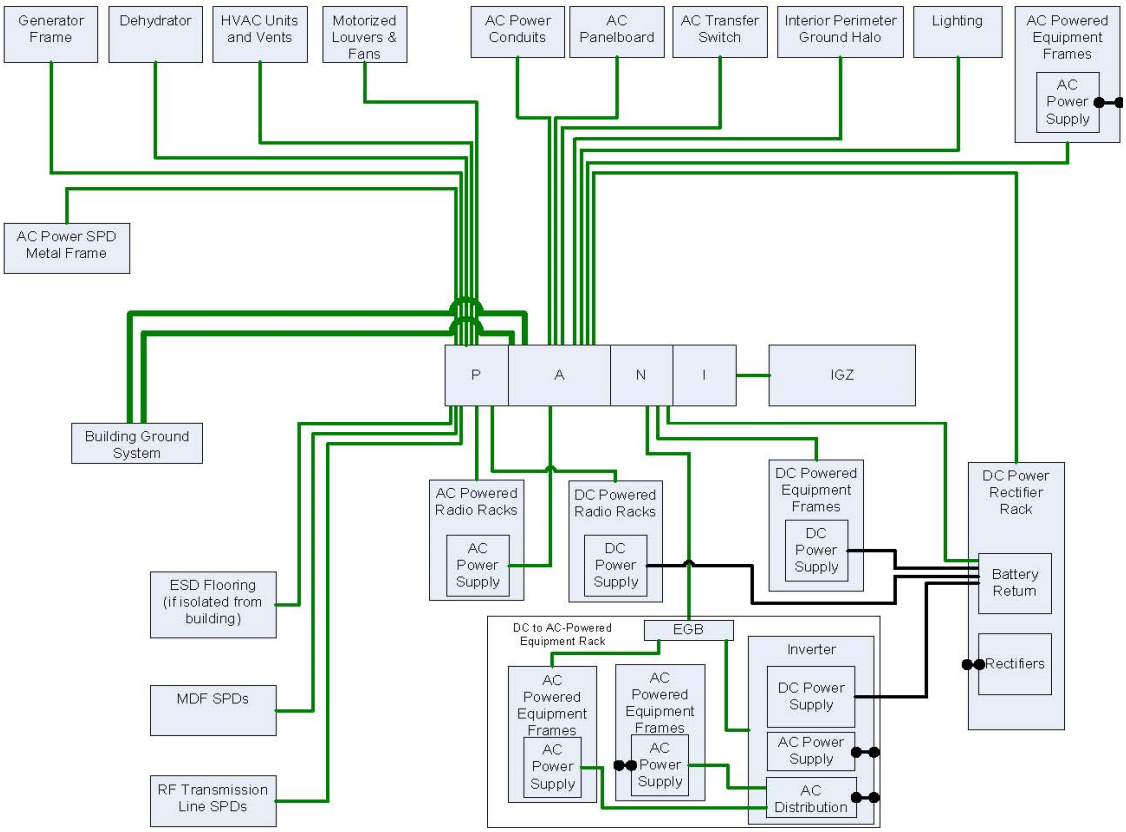

Figure 5.3.13

5.3.5 Equipment Ground Bar (EGB)

5.3.5.1 In large facilities it may be necessary to install supplemental Equipment Ground Bars (EGB) to minimize the length and number of individual ground wires connecting to the MGB. These bars (identical to the MGB, but without the PANI Markings) shall be used to bond racks, cabinets, cable runway and NetShelter ground bus cables.

5.3.5.2 The EGB shall be equipped with a Plexiglas cover with “EGB” or “Equipment Ground Bar” stenciled on it. The cover shall be stood-off the EGB using insulated standoffs.

5.3.6 Floor Ground Bar (FGB)

5.3.6.1 Where an anti-static floor is installed that uses Copper foil as its conducting medium, a Floor Grounding Bar (FGB) (Harger Part# GBIP1836CEFGB) shall be used.

5.3.6.2 The FGB consists of two 3" x 6" x 1/8" solid copper ground bars with a single pair of 7/16" pre-drilled universal lug holes. It includes insulated mounting hardware - see Figure 5.3.7.

Figure 5.3.7

5.3.6.3 The Floor Ground Bar shall be equipped with a Plexiglas cover with “FGB” or “Floor Ground Bar” stenciled on it. The cover shall be stood-off the FGB using insulated standoffs - see Figure 5.3.8.

Figure 5.3.8

5.3.6.4 The FGB shall be installed no more than 3” above the point that floor grounding foil protrudes from the floor.

5.3.7 Horizontal Rack-mount Ground Bar (HRGB)

5.3.7.1 A Horizontal rack-mounted Ground Bar (HRGB) - see Figure 5.3.9, (B-Line Part# SBHB119K), shall be installed in each Cabinet and/or Rack. For 23” racks, use B-Line Part# SBHB123K. These parts comes as a kit with the following material:

- 1 - Horizontal rack ground bar
- 2 - White insulators
- 4 - #12-24 x 5/8” (15.9mm) zinc plated screws & flat washers
- 20 - #12-24 x 1/2” (12.7mm) zinc plated screws
- 2 - Ground labels

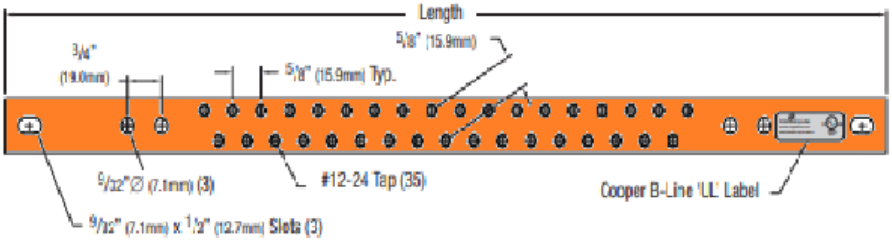

Figure 5.3.9

5.3.7.2 The HRGB shall be isolated from the cabinet and/or rack using (2) Rack Busbar Insulator Blocks supplied as part of the HRGB kit - see Figure 5.3.10 or equivalent. Unless otherwise directed by the CISD Project manager, the HRGB shall be installed at the topmost available RU mounting space.

Figure 5.3.10

5.3.7.3 In configurations where a 4-post rack or 4-rail cabinet is installed, the HRGB shall be installed on the rear set of posts or rails.

5.3.7.4 Rack and cabinet rail connections shall be installed in a manner that will minimize the rendering of RU spaces that become unusable. Where possible, bonding shall be done to built-in grounding studs.

5.3.7.5 All connections to the HRGB shall be installed in a manner that ensures that bends do not violate bend radius and bend angle limitations - see Figure 5.3.11. Two-hole lug connections to the Busbar shall face the direction from which the wire is routed to the Busbar.

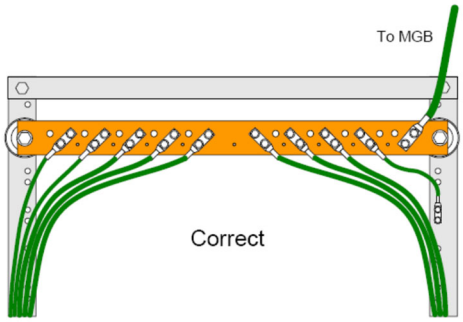

Figure 5.3.11

5.3.8 Bonding to Bus Bars

5.3.8.1 The SPGB shall be bonded to the LAN Room's 4/0 AWG ground wire GrC.

5.3.8.2 The stranded tail of the SPGB shall be attached to the attached to the GrC using a high pressure 4/0-2/0 "C" clamp - see Figure 5.3.12.

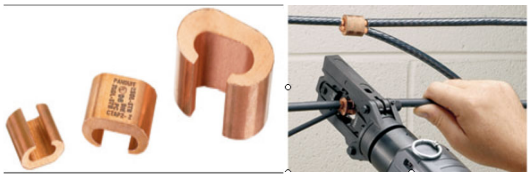

Figure 5.3.12

5.3.8.3 An MGB shall be bonded to the SPGB using a pair of 2/0 AWG green insulated stranded copper wire with double-hole lugs high pressure crimped on at each end. One lug of each cable shall be bolted to the first set of adjacent pairs of holes in the "A" section of the "PANI" layout closest to the "P" section. The other end shall be connected to an available pair of holes closest to the center of the SPGB.

5.3.8.4 Bonding cables are connected to the MGB using a specific set of rules (as described in the MGB section). When it is unknown where to ground a piece of equipment or system, the installer shall contact the CISD Project manager for the proper placement.

5.3.8.5 Unless otherwise noted, all CISD installed equipment and infrastructure shall be considered absorber type equipment and shall be bonded to the "A" section.

5.3.8.6 An EGB shall be bonded to the MGB using a #2 AWG green insulated stranded copper wire with high pressure crimped on double-hole lugs at each end. One lug of the cable shall be bolted to a pair of holes in the "A"

section of the “PANI” layout on the MGB and the other end shall be connected to a pair of holes closest to the left side of the EGB.

5.3.8.7 An HRGB shall be bonded to the “A” section of the MGB using a #6 AWG green insulated stranded cable a two-hole (5/8” OC Spacing), long barrel lug (Harger Part# GECLB62A) - see Figure 5.3.13 high pressure crimped to each end.

Figure 5.3.13

5.3.8.8 A #6 AWG Ground Strap kit (Chatsworth Part# 40164-001) - see Figure 5.3.14 or equivalent, shall be used to create a bonding connection between racks and/or cabinets and the rack mounted Bus bar.

Figure 5.3.14

5.3.8.9 The bonding strap shall be connected to the rail at the highest RU spacing below the Busbar that does not cause a sharp bend in the strap. The other end shall be bolted to the holes on the HRGB closest to the ground bonding cable.

5.3.8.10 Cable Runway Segments connected with butt splices shall be bonded using a #6 AWG Bonding Strap kit.

5.3.8.11 The bonding cable running between the various Bus bars shall be electrically isolated from all runways and conductive structures.

5.3.8.12 The bonding cable shall be routed along runways using non-conductive hangers such as the Panduit J-Pro hangers. Use of nylon ties or hook and loop straps to lash the cable to runways are not acceptable.

5.3.8.13 An anti-static tile floor that uses copper foil as the bonding medium shall be bonded to the floor’s copper foil by folding the foil three times which shall then be sandwiched between the two Copper plates - see Figure 5.3.15.

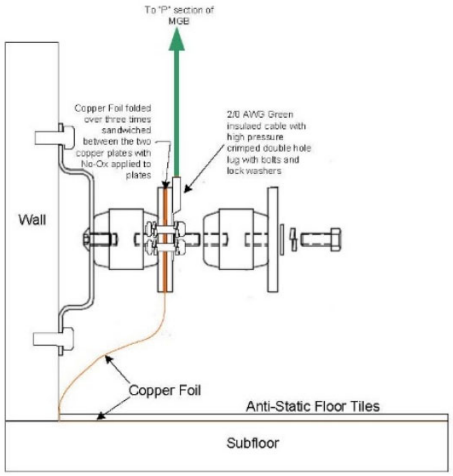

Figure 5.3.15

5.3.8.14 The FGB shall be bonded to the MGB using a 2/0 AWG green insulated stranded copper wire with double-hole lugs high pressure crimped to each end. One lug shall be bolted to the “P” section of the MGB. The other lug shall be bolted with lock washers, through the FGB’s Copper plates and foil.

5.3.8.15 A conductive anti-static rubberized tile floor shall be bonded to the MGB using a 2/0 AWG green insulated stranded copper wire with double-hole lugs high pressure crimped to each end. One lug shall be bolted to the “P” section of the MGB. The other lug shall be bolted to the tile using 1/4-20 T Nuts - see Figure 5.3.16 which shall be attached to the back of the tile.

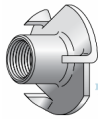

Figure 5.3.16

5.3.8.16 The cable connection to the floor shall be parallel and alongside the wall such that it does not cause a tripping hazard.

5.3.8.17 Raised floors shall be bonded and grounded as follows:

Install GPQC Access Floor Grounding clamps sized for the installed pedestal (Panduit Part # GPQCXX-1/0 - where XX represents type and size of pedestal), 2”-4” below top of pedestal and at 4’-6’ intervals - See Figure 5.3.16A

Figure 5.3.16A

5.3.8.17.1 Install bare #6AWG Copper Stranded cable in a continuous loop between as many GPQC’s as possible. - See Figure 5.3.16B – Floor Grounding Example

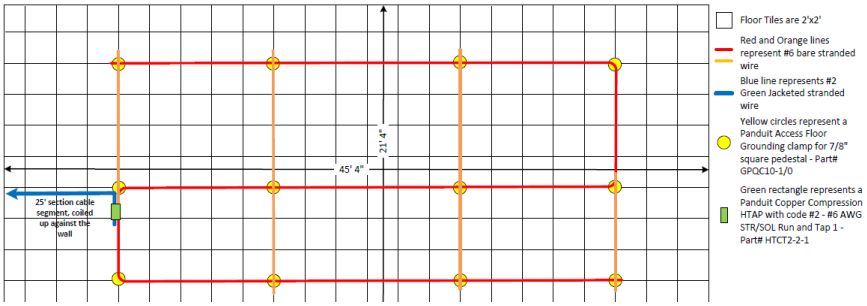

Figure 5.3.16B

5.3.8.17.2 Install segments of bare #6AWG Copper Stranded cable between any adjacent GPQC’s that were missed by the main loop.

5.3.8.17.3 Using a CTAP clamp, crimp a segment of #2AWG Green Jacketed Stranded copper cable long enough to reach the rooms' MGB, to the bare #6AWG Copper Stranded cable.

5.3.8.17.4 Attach the loose end of the #2AWG cable to the "P" section of the MGB.

5.3.9 Bonding Cables and Lugs

5.3.9.1 Bonding cables with high pressure crimped two-hole lugs shall be used with stainless steel bolts, lock washers & nuts when attaching Bus bars and other bonding points, to each other - see Figure 5.3.18.

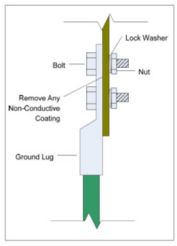

Figure 5.3.18

5.3.9.2 The table below - see Table 5.3.1, lists the wire gauge to be used for the bonding cable between the MGB and other Bus bars. Cable length shall not exceed the maximum length for a given wire gauge.

Conductor Size	Maximum Cable Length
#6 AWG	20 ft.
#2 AWG	33 ft.
2/0 AWG	66 ft.
4/0 AWG	>66 ft.

Table 5.3.1

5.3.9.3 Bonding cable exceeding the maximum length permitted for a particular wire gauge shall be sized to the appropriate gauge size.

5.3.9.4 The bonding cable shall be either green or green-coded black insulated stranded cable.

5.3.9.5 The bonding cable shall have each end terminated with a double hole, Irreversible high pressure crimped lug.

5.3.9.6 The following table - see Table 5.3.2, lists the lug to be used with a specific wire gauge when terminating the cable.

Conductor Size	Harger Part# (or equivalent)
#6 AWG	GECLB62C
#2 AWG	GECLB22C
2/0 AWG	GECLB2/02C
4/0 AWG	GECLB4/02C

Table 5.3.2

5.3.9.7 The metal surface that a bonding conductor will be bonded to shall be cleared of any foreign material and/or oxidation and shall be burnished to allow for good conductivity.

5.3.9.8 An approved antioxidant joint compound (Harger Part# HAAJC8) shall be applied between any bonding conductor and the burnished metal surface.

5.3.9.9 All bonding lugs shall be attached with Stainless Steel hardware and shall include a lock washer appropriate for the application.

5.3.9.10 All bonding cables (other than bonding straps) shall have identification tags (Panduit BM1M or equivalent) - see Figure 5.3.19, applied within 3”-5” of the lug.

5.3.9.11 At each end of the cable, the tag shall clearly identify, with permanent marker or printed label, the far endpoint of the cable. Each tag should contain a unique numeric identifier as well as the location of the other end.

Ex: at the MGB Bus bar end -- **#6 – Cab 4**
at the Cabinet end -- **#6 – MGB**

Figure 5.3.19

5.3.9.12 Bonding cables shall be routed in such a manner that results in the shortest cable length.

5.3.9.13 Bonding cables should always curve smoothly and never make sharp bends that exceed a 90 degree bend or exceed a minimum bend radius of 8 inches - see Figure 5.3.20.

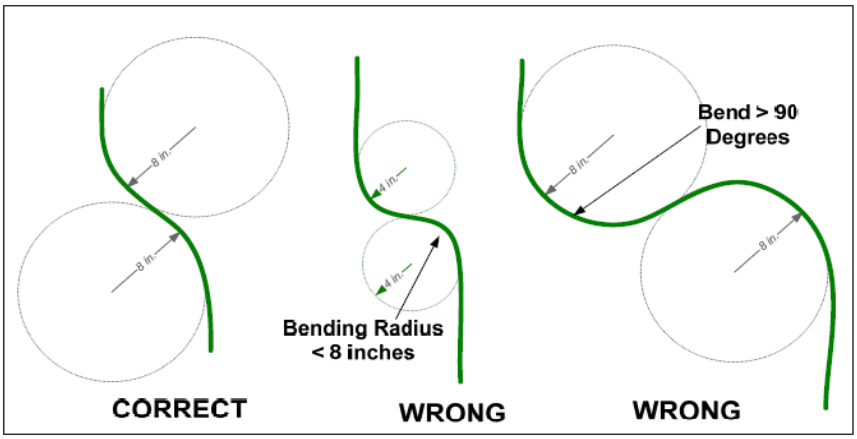

Figure 5.3.20

5.3.10 Equipment Cabinet Bonding Methodology

5.3.10.1 A #12 AWG green insulated stranded cable high pressure crimped to single-hole lugs at each end shall be used to bond all ground studs within a cabinet.

5.3.10.2 An HRGB shall be installed in the rear set of rails at the top RU position

5.3.10.3 The cabinet frame, power troughs & data partitions on NetShelter cabinets, shall be bonded as follows:

5.3.10.3.1 Two #2 AWG green insulated stranded copper ground buses (Cabinet and Data) shall be installed above the cabinet. These two Ground

Buss's shall be joined with a High-pressure C-Clamp just past the row of cabinets & before reaching the MGB or EGB.

5.3.10.3.2 The #2 AWG bonding cable shall be connected to an EGB or the "A" section of an MGB.

5.3.10.3.3 The cabinet and power trough (if installed) shall be bonded to the Cabinet Buss. The HRGB and data partition (if installed) shall be bonded to the Data Buss.

5.3.10.3.4 Bonds to the Ground Buss's shall use a short #6 AWG green insulated stranded copper bonding wire.

5.3.10.3.5 At one end of the bonding wire a one- or two-hole high pressure crimped lug (depending on the connection point) shall be mechanically connected to the threaded copper post or threaded bolt hole of the cabinet, trough, partition and HRGB - see Figure 5.3.21.

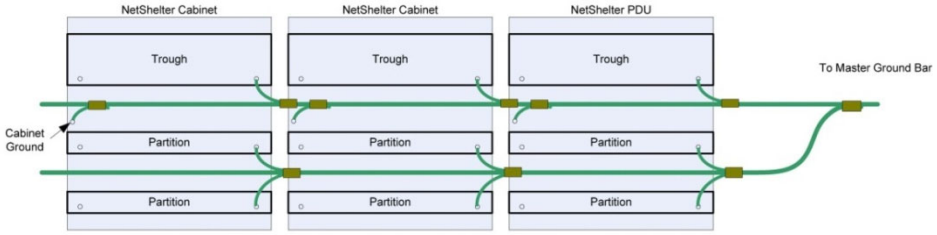

Figure 5.3.21

5.3.10.3.6 At the other end of the bonding cable an irreversible crimp connection shall be made to the Ground Buss using a Harger (Part# CT2248LD) or equivalent Light-duty C-Type Compression Tap - see Figure 5.3.22.

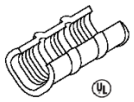

Figure 5.3.22

5.3.11 Equipment Isolation Methodology

5.3.11.1 Racks that will be bolted to the floor shall utilize a Rack isolation kit (CPI Part# 10605-019 for 19" Rack or 10605-023 for 23" Rack), that is placed under the rack - see Figure 5.3.23.

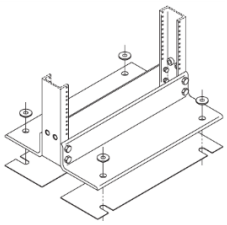

Figure 5.3.23

5.3.11.2 Cable Runway (ladder) shall be electrically isolated from racks or cabinets by using Runway Insulator bar kit (Chatsworth Part# 10842-001) - see Figure 5.3.24.

Figure 5.3.24

5.3.11.3 Cable Runway (ladder) shall be electrically isolated from walls, ceilings and any supporting structure using Runway Insulator bar kit (Chatsworth Part# 10842-001) or Stand-off Insulators (Chatsworth Part# 13622-000 or equivalent) - see Figure 5.3.25.

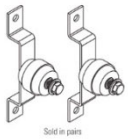

Figure 5.3.25

5.3.11.4 The following Harger Parts or equivalent - see Table 5.3.3, shall be used as applicable, when isolators are required:

Standoff Insulators - Red

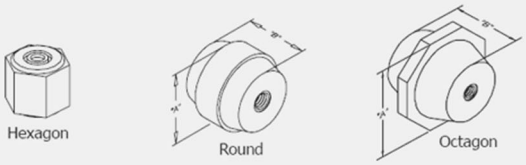

Manufactured from glass reinforced thermoset polyester.

	Part No.	"A"	"B"	Shape	Thread Size	Voltage Rating	Tensile Strength (lbs.)	Box Qty.	Approx. Box Wt. (lbs.)
Add to BOM ♦	1100A1	1"	1"	Hex	1/4 - 20 x 1/4 AL	600	1200	25	1-1/2
Add to BOM ♦	4150S2	2"	1-1/2"	Oct	1/4 - 20 x 1/2 STL	1500	3000 - 4500	20	4-1/2
Add to BOM ♦	R4150S3	1-3/4"	1-1/2"	Round	5/16 - 18 x 1/2 STL	1500	2500 - 2700	20	5-1/2
Add to BOM ♦	R4150A4	1-3/4"	1-7/8"	Round	3/8 - 16 x 3/8 AL	2000	2500 - 2700	20	5-1/2
Add to BOM ♦	R4200S5	1-3/4"	2"	Round	3/8 - 16 x 5/8 STL	2500	2500 - 2700	20	6-3/4
Add to BOM ♦	4200S6	2"	2"	Oct	1/2 - 13 x 5/8 STL	2500	3000 - 4500	20	8
Add to BOM ♦	5250A5	2-1/2"	2-1/2"	Oct	3/8 - 16 x 5/8 AL	3200	5000 - 5700	10	4-1/2
Add to BOM ♦	5263A8	2-1/2"	2-5/8"	Oct	5/8 - 11 x 3/4 AL	3400	5000 - 5700	10	4-3/4

♦ BOM = Bill of Materials

Table 5.3.3

5.3.12 Single Small Cabinet Installations

5.3.12.1 Where an Installation consists of a single small cabinet, the Grounding and Bonding methodology changes as follows:

5.3.12.1.1 Con Edison or their designated Contractor shall identify a main steel column or a steel beam that has electrical continuity with a main steel column.

5.3.12.1.2 Identify a 3” by 3” section of building steel that can be made easily accessible and clearly visible, as close to the cabinet as possible.

5.3.12.1.3 Clear the section of any insulating material (e.g. concrete, rust, paint, etc).

5.3.12.1.4 A 5’ length of 4/0 AWG Green insulated wire shall be high pressure crimped to a Thomas & Betts (Part# IBG20-40) I-Beam Ground Clamp lug. The Contractor shall attach the clamp and lug to building steel, ensuring that it is firmly attached and cannot be moved. This cable will serve as the GrC for this cabinet.

5.3.12.1.5 A bond resistance test shall be performed on the GrC using an AEMC Model 3731 Ground Resistance Tester or equivalent. Ground resistance shall not exceed 0.2 Ohms.

5.3.12.1.6 A Horizontal Rack-mounted Ground Bar (HRGB) supplied by Con Edison, shall be installed in the cabinet.

5.3.12.1.7 The HRGB shall be installed at the topmost available RU mounting space.

5.3.12.1.8 The HRGB shall be isolated from the cabinet using (2) Rack Bus bar Insulator Blocks (Chatsworth Part# 40157-001) or equivalent.

5.3.12.1.9 The HRGB shall be bonded to the GrC using a #6 AWG Green insulated wire with high pressure crimped lug on one end. The other end shall remain bare and shall be bonded to the GrC using a high pressure crimped 4/0-#6 “C” clamp (Panduit Part# CTAP4/0-2-X).

5.3.12.1.10 All connections to the HRGB Bus bar shall be installed in a manner that ensures that there are no sharp bends. Two-hole lug connections to the Bus bar shall face the direction from which the wire is routed to the Bus bar.

5.3.12.1.11 A #6 AWG Ground Strap kit (Chatsworth Part# 40164-001) or equivalent shall be used to create a bonding connection between racks and/or cabinets and the rack mounted Bus bar.

5.3.12.2 Should a second cabinet be added in the future, then the following modifications shall be installed:

5.3.12.2.1 A SPGB shall be installed in close proximity to the GrC.

5.3.12.2.2 The bare 2/0 AWG Cad welded tail of the SPGB shall be bonded to the GrC using a high pressure crimped 4/0-2/0 “C” clamp (Panduit Part# CTAP4/0-2/0-X).

5.3.12.2.3 The #6 bonding cable from the HRGB shall be cut free from the GrC and a lug shall be high pressure crimped to the cable.

5.3.12.2.4 The lug shall be bolted to an available pair of holes closest to the center of the SPGB.

5.3.12.3 The second and/or any subsequent cabinet shall be grounded and bonded in the same manner as the first cabinet.

5.3.13 Outdoor Rated CatX Grounding at a POE

5.3.13.1 When an outdoor rated Cat/5e cable enters a facility, it needs to be grounded to isolate it and eliminate any induced current that may be present in the copper conductors. The follow methodology shall be used to affect this isolation and grounding.

5.3.13.2 For cable enclosed in above ground conduit or exposed to the environment:

5.3.13.2.1 An Altelicon Lightning Protector (Part# AL-CAT5EHPW) shall be installed at each end of the cable as close to the point of entry (POE) as practical - see Figure 5.3.26.

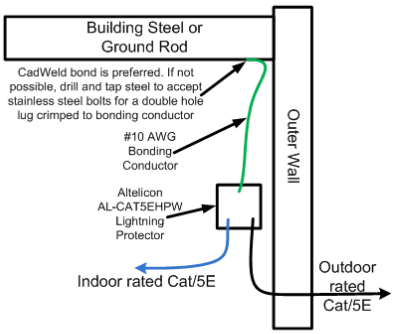

Typical Isolation & Grounding Setup for Cat/5e Cable Running Above Ground in Conduit or Exposed

Figure 5.3.26

5.3.13.2.2 The Altelicon unit should be mounted in a location that permits simple access, should the unit need to be serviced.

5.3.13.2.3 The Outdoor rated cable, indoor rated cable and a #10 AWG Green insulated solid Copper cable shall be connected to the Altelicon as depicted in Figure 5.3.27.

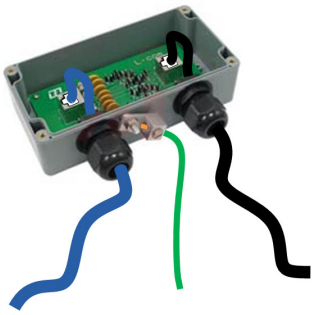

Figure 5.3.27

5.3.13.2.4 One end of the #10 AWG bonding conductor should be attached to the Altelicon's grounding lug and screwed down tightly so that it doesn't come loose.

5.3.13.2.5 The second end of the #10 AWG bonding conductor should be bonded to building steel or a properly installed ground rod.

5.3.13.2.6 The preferred method to bond to building steel or ground rod is by using a CadWeld process.

5.3.13.2.7 If it is not possible or practical to do the CadWeld, a two-hole lug should be attached to the bonding conductor using a high-pressure irreversible crimp.

5.3.13.2.8 A small section of steel beam flange should be cleared of concrete and/or rust and burnished to provide good conductivity.

5.3.13.2.9 When both sides of a beam flange are accessible, two holes should be drilled through the flange. An approved antioxidant joint compound shall be applied between the steel and lug. Two stainless steel bolts with lock washers and nuts shall be used to bond the lug to the steel.

5.3.13.2.10 When only one side of a beam flange is accessible, two holes should be drilled through the flange and tapped. An approved antioxidant joint compound shall be applied between the steel and lug. Three eights inch stainless steel bolts with lock washers screwed into the tapped holes shall be used to bond the lug to the steel. To prevent the screws from loosening over time, LOCTITE® 242™ medium strength thread lock shall be applied to the threads.

5.3.13.2.11 When the grounding will utilize a ground rod, a light duty ground rod clamp (Harger Part# 300LD) - see Figure 5.3.28, shall be used to bond the conductor to a properly installed ½" ground rod.

Figure 5.3.28

5.3.13.3 For cable enclosed in buried conduit:

5.3.13.3.1 Where a single device is being protected, an APC ProtectNet standalone surge protector (Part# PNET1GB) - see Figure 5.3.29, shall be installed at each end of the cable as close to the equipment that is being protected as practical.

Figure 5.3.29

5.3.13.3.2 The Green ground wire exiting the surge protector shall be attached to a properly installed ground point.

5.3.13.3.3 When multiple cables will be run between two locations, an APC 4 position chassis (Part# PRM4) or a 24-position chassis (Part# PRM24), shall be installed at the point of cable termination, typically on a rack or within a cabinet - see Figure 5.3.30.

Figure 5.3.30

5.3.13.3.4 A #10 AWG stranded Green insulated cable with a crimped on single-hole lug shall be attached to the chassis ground stud on the rear left of the chassis - see Figure 5.3.31.

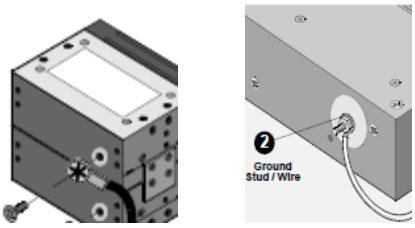

Figure 5.3.31

5.3.13.3.5 The other end of the cable shall be connected to the HRGB supporting the rack.

5.3.13.3.6 An APC Surge Module for Cat5e or CAT6 (Part# PNETR6) - see Figure 5.3.32, shall be installed in the chassis for each outdoor Cat5e cable that is to be protected.

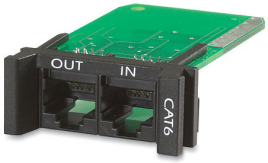

Figure 5.3.32

5.3.13.3.7 The outdoor cable shall be plugged into the “IN” port and the equipment being protected shall be plugged into the “OUT” port of the surge protection module.

6.0 Change Log

Date	Author	Rev #	Comments
6/10/22	Michael Ribarich	11	Changed references from LIS to CISD. Also changed references from IR to IT. Format changes.

IT-CISD-RRL-GDL-03

Information Technology
Communications Infrastructure and Site Design
(CISD)

Cable Runway and Rack Layout Design and Construction Guideline

Prepared By: Ron Devito
Systems Specialist
Date: August 6, 2024

Reviewed By: Michael J. Ribarich
Systems Manager
Date: August 6, 2024

Approved By: Michael J. Ribarich
Systems Manager
Date: August 6, 2024

Printed on 8/6/2024

INTERNAL

Table of Contents

1.0 PURPOSE 3
2.0 APPLICABILITY 3
3.0 USERS, REVIEWERS AND APPROVERS 3
4.0 EXCEPTIONS / DEVIATION PROCESS 3
5.0 TECHNICAL REQUIREMENTS 4
5.3 Rack Material Requirements 14
6.0 Enclosure-Based LANs 18
7.0 Change Log 23

1.0 PURPOSE

1.1 This specification provides the technical requirements for the design and installation of cable runway and racks within IT rooms and spaces.

2.0 APPLICABILITY

2.1 This specification applies to corporate sites, control, centers, data centers and field sites.

3.0 USERS, REVIEWERS AND APPROVERS

3.1 The users of this specification are members of IT Communications Infrastructure & Site Design (CISD) group responsible for the design and build of LAN and Data Center physical infrastructure including cable runway and rack systems. Other users are structured cabling contractors who also design and build cable runway and rack systems.

3.2 The approver of the document is the CISD Systems Manager. The group's LAN physical infrastructure SMEs will propose changes to the CISD Systems Manager. Revised documents will be placed in group's SharePoint public folder.

3.3 The review process is ongoing as new parts and technologies develop and are utilized. A formal review will take place annually in January by the CISD group to capture any changes that may not yet been incorporated.

3.4 Training requirements will be met by formal technical training by outside groups such as structured cabling contractors, by internal on the job training, and group collaboration.

4.0 EXCEPTIONS / DEVIATION PROCESS

4.1 CISD will follow a review and approval process for interim changes during emergent situations.

4.2 Interim changes will be handled by email or verbal notification by the CISD Systems Manager and/or the appropriate CISD SMEs.

4.3 The process and forum for communicating Interim changes will be periodic staff meetings or by teleconference scheduled by the CISD Systems Manager.

5.0 TECHNICAL REQUIREMENTS

5.1 Technical Scope

5.1.1 The primary purpose of cable runways is to route cable (both Copper and Fiber) between room entry points and cable racks/enclosures. They are also used to route ground conductors between racks/enclosures and Main Ground Bars (MGB) or Equipment Ground Bars (EGB) and to route power cords between racks/enclosures and wall outlets.

5.1.2 Cable runway systems shall be electrically isolated from floors, walls, ceilings and any supporting structure by means described in the current revision of the **IT-CISD Standard Specification for Installation of LAN Telecommunications Grounding & Bonding (TGB)**

5.1.3 Cable runway systems shall be electrically isolated from ground conductors and power cords that they are used to route by means described in the current revision of the **IT-CISD Standard Specification for Installation of LAN Telecommunications Grounding & Bonding (TGB)**

5.1.4 Racks are used to house cable terminations (Copper and Fiber), cable cross-connects, active network equipment (switches and routers) and power distribution dedicated for this equipment (UPSs, ATSs and PDUs).

5.1.5 Racks shall be electrically isolated from floors, walls ceilings, cable runway and any other supporting structures by means described in the current version of the **IT-CISD Standard Specification for Installation of LAN Telecommunications Grounding & Bonding (TGB).**

5.2 Runway Material Requirements

5.2.1 All cable runway products shall be Chatsworth Products, Inc. (CPI) or equivalent and finished in black

5.2.2 The standard runway used shall be 12” wide **(CPI part # 10250-712 - - Figure 5.16A)**

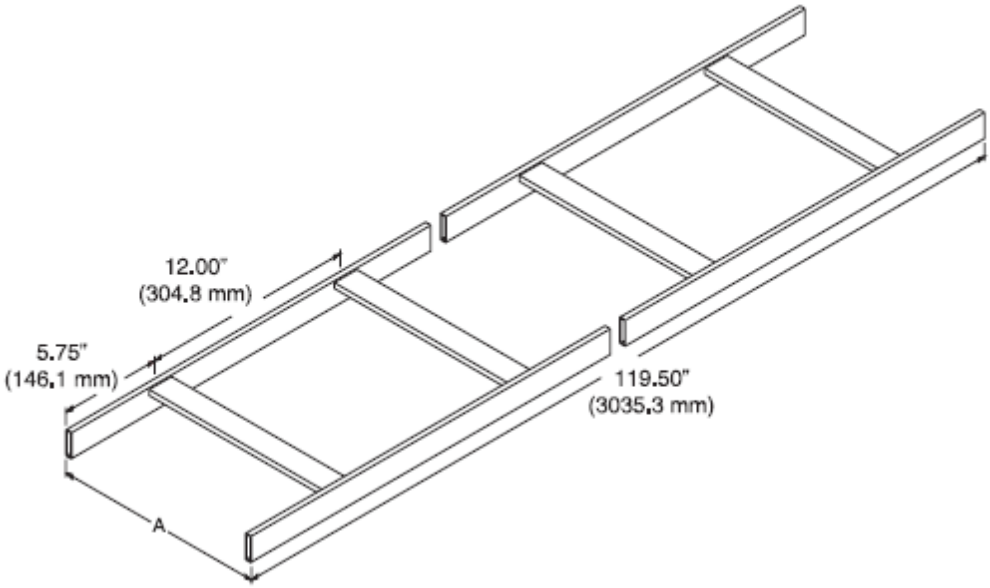

Figure 5.16A

5.2.3 Runway shall be installed with side stringers facing down so that the ladder forms an inverted U-shape

5.2.4 Cable runway shall be supported every 5' or less in accordance with TIA-569-B

5.2.5 A minimum clearance of 12" shall be maintained between the top of horizontal cable runway and ceiling/building truss structure

5.2.6 A minimum of 3" in between cable runway and the tops of racks and/or cabinets should be maintained for proper cable routing

5.2.7 Multiple tiers of cable runway shall be installed with a minimum clearance of 12" in between each tier, when routing of power is required.

5.2.8 The primary support for horizontal runway shall be by 3/8"-16 thread threaded drop rods **(CPI part# 11440-001 or equivalent** -- **Figure 5.16B)** fitted with plastic tubing covers to protect cabling **(CPI part # 11085-001-- Figure 5.16C)**

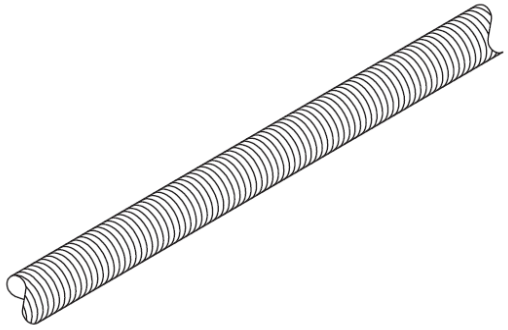

Figure 5.16B

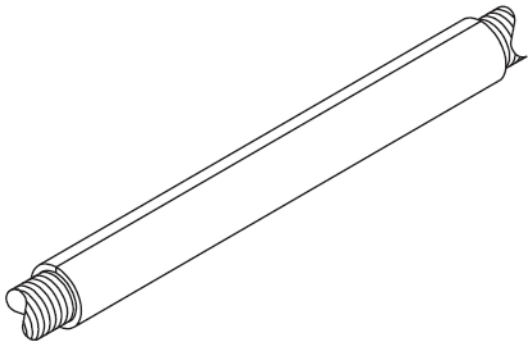

Figure 5.16C

5.2.9 3/8-16 thread **anchors (CPI part #20067-01 or equivalent - - Figure 5.16D)** can be used to secure drop rods to ceiling deck.

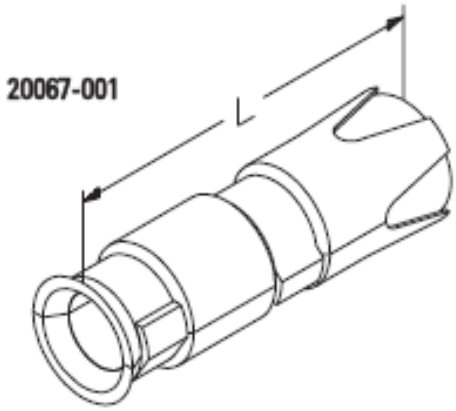

Figure 5.16D

5.2.10 An alternative means for suspending drop rods from a ceiling deck can be ceiling support brackets **(CPI part # 11406-001 – Figure 5.16E)**

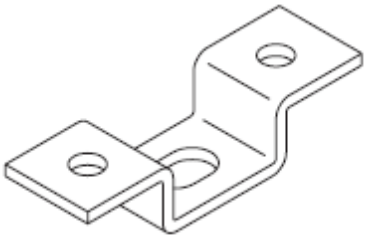

Figure 5.16E

5.2.11 If a building truss system is available, drops rods can be suspended by threaded rod I-beam clamps **(CPI part# 10557-001 or equivalent - - Figure 5.16F)**

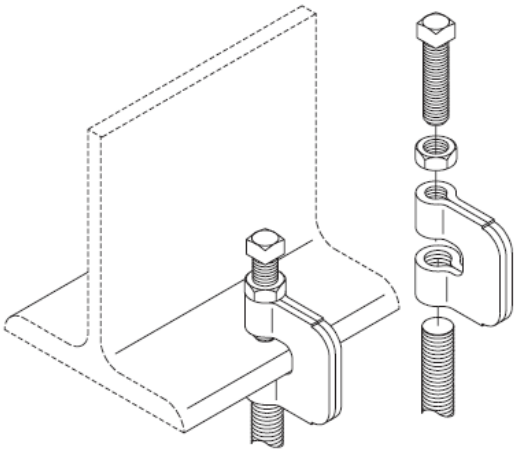

Figure 5.16F

5.2.12 The use of Kindorf brackets to suspend drops rods is also an acceptable means of support.

5.2.13 Drop rods are secured to the cable runway by slotted support brackets **(CPI part # 10607-002 - - Figure 5.16G)**.

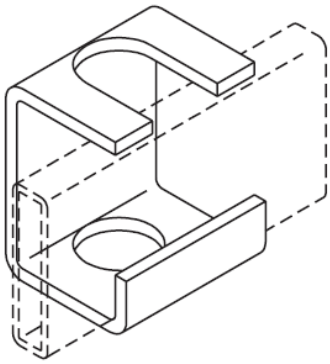

Figure 5.16G

5.2.14 Triangular support brackets **(CPI part # 11312-718 – Figure 5.16H)** can be used to supplement drop rod support on horizontal runway spans near walls to control swaying.

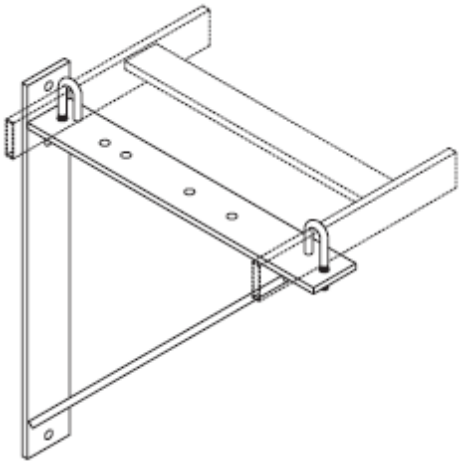

Figure 5.16H

5.2.15 The primary support for vertical runway shall be wall-mounted brackets **(APC part# 10608-001 - - Figure 5.16I)**.

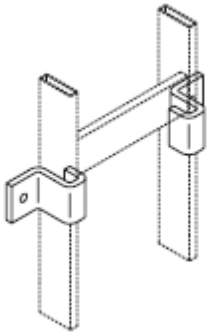

Figure 5.16I

5.2.16 If horizontal runway is located such that it is too far from the wall to be secured with wall-mounted brackets specified in 5.16.15, then a foot kit **(CPI part# 11309-001 – Figure 5.16J)** shall be used to secure the runway to the floor in lieu of the wall.

INTERNAL

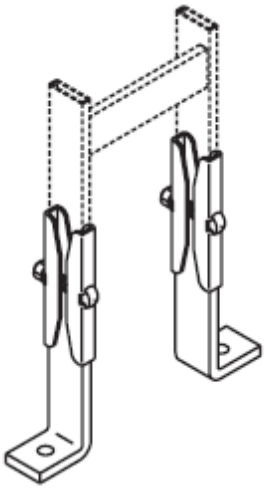

Figure 5.16J

5.2.17 Cable runway radius drops for routing cable over runway cross members **(CPI part# 12100-712 – Figure 5.16K)** and stringers **(CPI part# 12101-701 - - Figure 5.16L)** shall be used to help maintain proper cable bend radius.

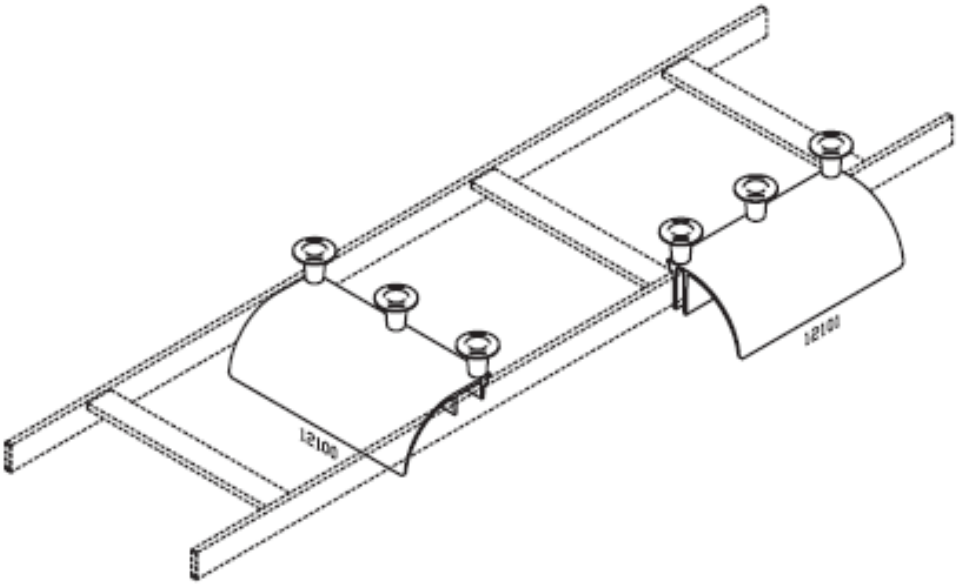

Figures 5.16K and L

5.2.18 When the dropping of cables at any point between cross members is required, a movable cross member **(CPI part# 12115-712 - - Figure 5.16M)** shall be used with the above mentioned cross member radius drop.

INTERNAL

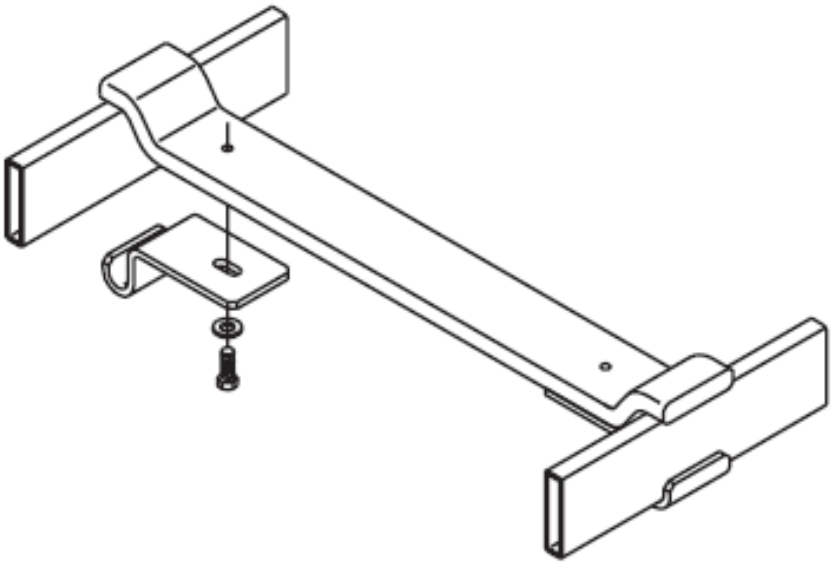

Figure 5.16M

5.2.19 Cascading cable runs shall use 90-degree outside (CPI part# 10723-712 - - Figure 5.16N) and inside (CPI part# 10724-712 - - Figure 5.16O) runway radius bends.

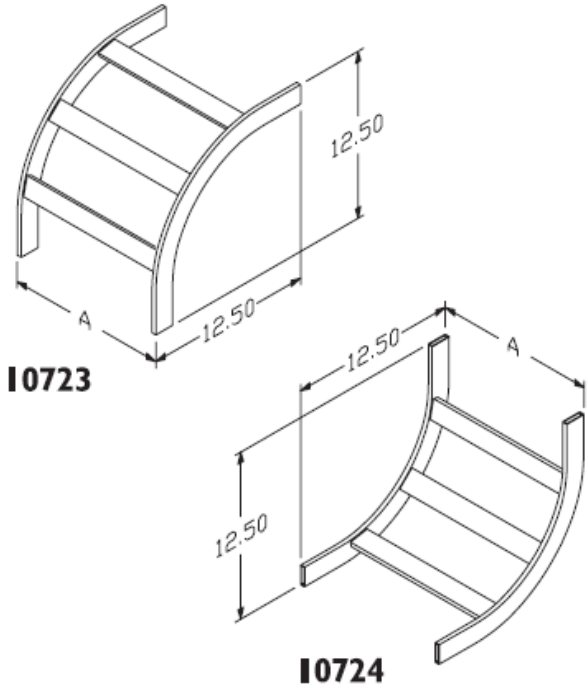

Figures 5.16N and O

5.2.20 90-degree turns in horizontal cable runs shall be made with runway sweeps **(CPI part# 10822-709 – Figure 5.16P)** or runway corner brackets **(CPI part# 11959-715 or 11959-724 - - Figure 5.16Q)** as an alternative.

INTERNAL

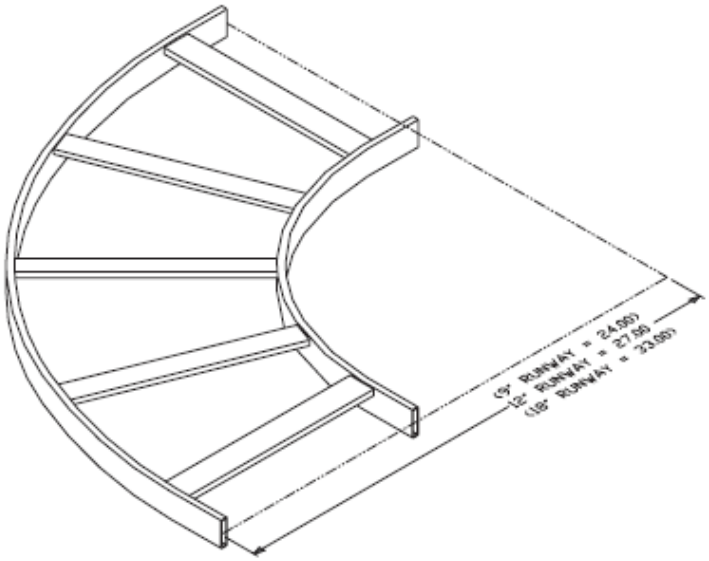

Figure 5.16P

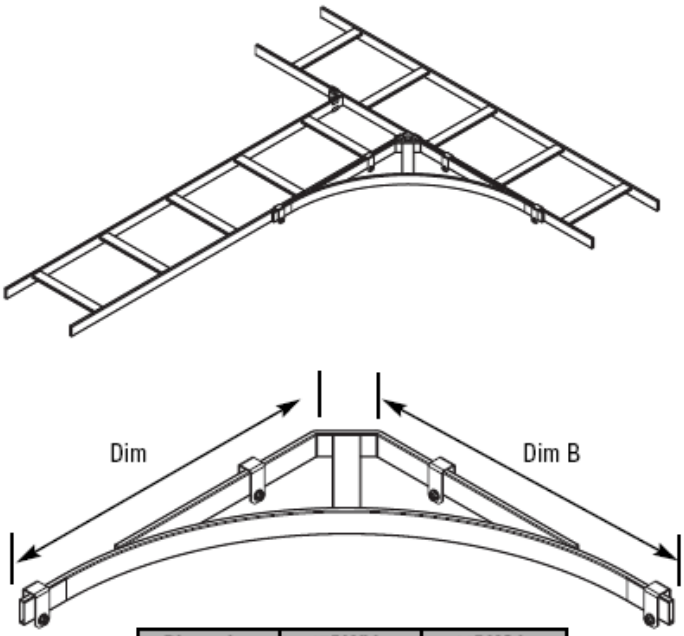

Dimension	15" Wide	24" Wide
A	15.48	24.13
B	15.48	24.13

Figure 5.16Q

5.2.21 Junction products for butt splices **(CPI part #11301-701- - Figure 5.16R)** and 90-degree splices **(CPI part# 11302-701 - - Figure 5.16S)** shall be used for connecting runway on the horizontal plane.

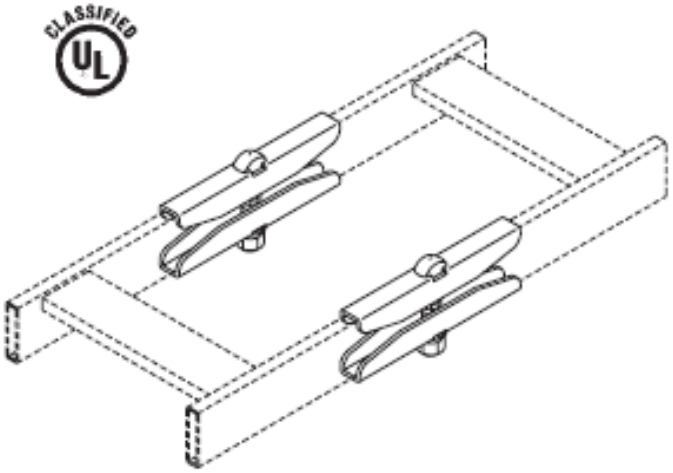

Figure 5.16R

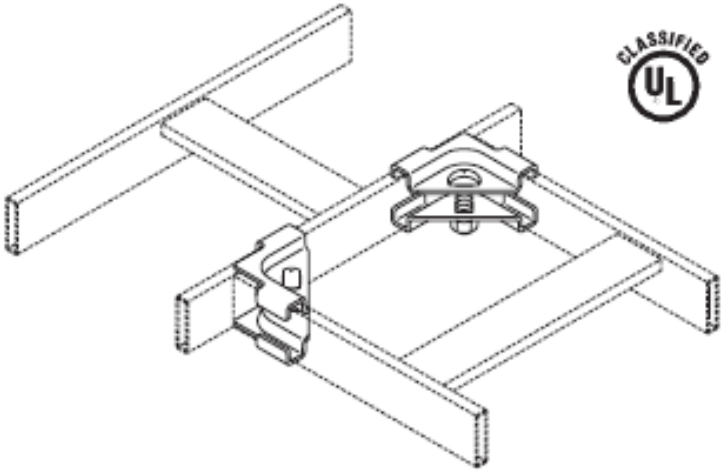

Figure 5.16S

5.2.22 Rack-to runway mounting plates **(CPI part# 10595-712 - - Figure 5.16T),** elevation kits **(CPI part# 10506-702 or 10506-706 - - Figure 5.16U)** and wall and support kits **(CPI part# 11421-712 - - Figure 5.16V)** are used to secure cable runway to racks and walls.

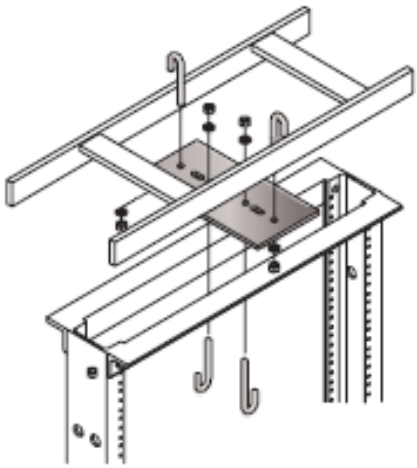

Figure 5.16S

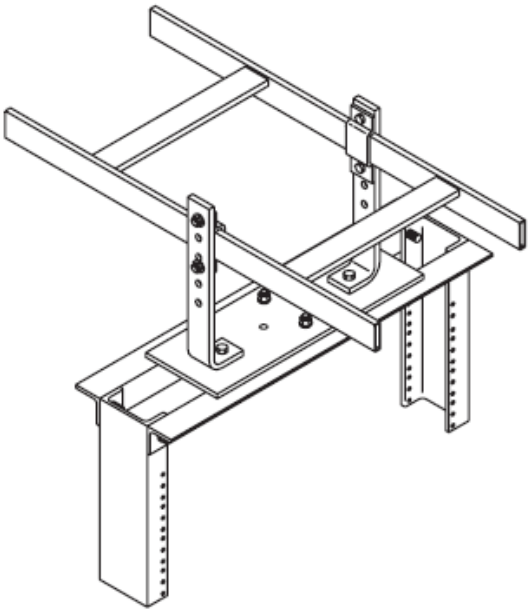

Figure 5.16T

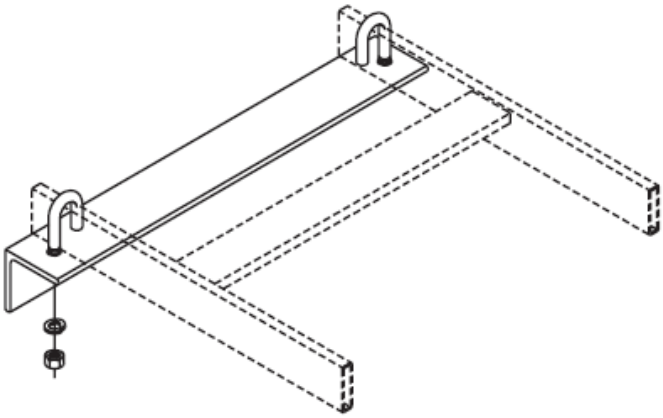

Figure 5.16U

INTERNAL

5.2.23 Protective end caps **(CPI part # 10642-001 – Figure 5.16W)** shall be used on exposed runway stringers.

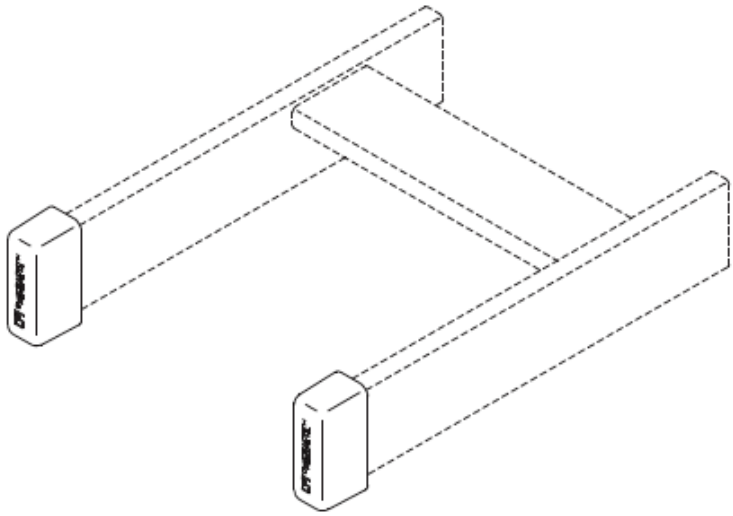

Figure 5.16W

5.3 Rack Material Requirements

5.3.1 The standard rack used shall be 7'Hx19"W, black in color **(CPI part# 46353-703)**. Other rack models or enclosures may be specified for special conditions.

5.3.2 Racks shall be installed with 36" clearance in front of and behind the deepest installed component.

5.3.3 One (1) vertical cable manager 6" **(CPI part # 30095-703) or 10" (CPI part # 30096-703 – Figure 5.17A)** shall be installed at the end of each rack and between each rack if more than one rack is installed. E.g. – One (1) rack would have a total of two (2) vertical cable managers. Two (2) racks together would have three (3). Five (5) racks would have six (6).

INTERNAL

Figure 5.17A

5.3.4 When any UPSs or extended run batteries are installed in racks, QuadraRack 4-Post Frame **CPI part # 50120-703 – Figure 5.18A** shall be used, except where space does not permit the depth of the rack. Four-post racks are always designated as Equipment Racks.

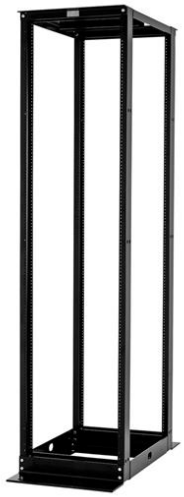

Figure 5.18A

5.3.5 When space considerations permit only a two-post rack, Schneider Electric (APC) Smart-UPS Modular Ultra 2 Post UPS Rail Kits, Part # SRYLOPT2 – 5.19A shall be used with all UPSs and extended run batteries, so their heavy weight concentrated in the rear does not exert torsion on the screws and rack threads. A two-post rack fitted with these rail cantilevers is always designated as an Equipment Rack.

Figure 5.19A

5.3.6 For CCTN Hut and Substation Communication Rooms, Information Technology (IT) vendor will install (1) – Moreng Telecom Products, Issue P Network Power Bay 7 Foot 23 Inch Wide 2 Post Blue Rack – Part # R084231R-3 – Figure 5.20A with Isolator Kits Part#CEC110113A for the Alpha CXPS-E3 DC Power Plant. Additionally, the following parts will be included with all Moreng Racks: Part # R8AC20-3 NTWK A/C RACEWAY; Part # R2-706-084 BAY EDGING (UL94); Part # R8R084-CTS CA TIES - STEEL - BLUE; Part # R8-503K2 ANCHOR SHIM KIT; Part # GP-4-23K ISOLATION BAY KIT (UEF); and Part # R7-208K4 SEISMIC ANCHOR KIT.

INTERNAL

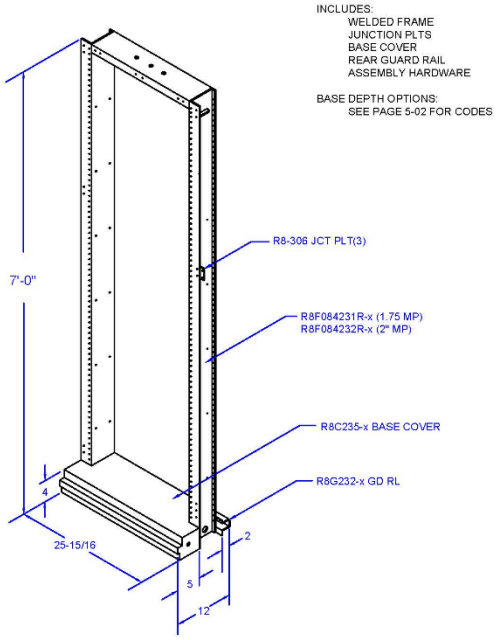

Figure 5.20A

5.3.7 Corporate Security DVR Rack Enclosures are Legrand AV (formerly Middle Atlantic) DRK Series 30-Inch Wide Racks Model DRK19-44-36LRD – Figure 5.21A. Corporate Security is responsible to procure, transport, stage, and provision these racks. They are included in this standard for inclusion in LAN / Comm Room / CCTN Hut layouts.

Figure 5.21A

6.0 Enclosure-Based LANs

Smaller LANs housed in temporary structures such as trailers and modular offices, or LANs at small sites will be housed in an enclosure rather than a dedicated room with open racks. These LANs are most typically specified on time and material jobs (what CISD calls “MiniPO”).

To allow for proper ventilation, all enclosures regardless of type must have mesh doors. Solid doors trap heat in the enclosure leading to premature equipment failure and UPS battery overheating, swelling and venting gasses.

Wall-Mounted Cabinets must be secured to studs, Kindorf/Unistrut, or a ¾” plywood backboard which is secured to struts, or Kindorf/Unistrut. Toggle bolts or anchors in sheetrock / false walls are not a safe or acceptable installation.

Each Wall-Mounted Cabinet has a weight limit which must be heeded.

Wall-Mounted cabinets must not be mounted at a height or position where passersby might strike their heads or other parts of the body. Wall-Mounted Cabinets must have sufficient clearance for all their sections to swing when equipment is being serviced or Move, Add, Change (MAC) work is being performed.

6.1 Floor Standing Full Height (7 feet)

Schneider Electric APC NetShelter (AR3105B2)

The Schneider Electric APC NetShelter SX Server Rack Gen 2, 45U, 2124H x 600W x 1070D mm, with Sides, Black (AR3105B2) is the standard full-height enclosure. This enclosure is also specified for on-premises data centers and server farms.

Figure 6.1

6.2 Floor Standing 48-Inch Height

CISD specifies Great Lakes ES Series 42” deep (GL480ES-2442-B-MS – Figure 6.2) OR E Series 32” deep (GL480E-2432-B-SQM6MS). The ES Series is preferred where space permits to provide the greatest flexibility with equipment depths. The correct depth arrived at must consider available floor space and the depth of the equipment being installed. UPSs including connected power cords have the largest depth profiles. For example, a Schneider Electric 1RU UPS form factor requires ES Series cabinets.

Figure 6.2

6.3 Wall-Mounted – 6U Horizontal Rail Orientation

For trailers, temporary structure, and other small LAN installations, the Chatsworth ThinLine II Wall-Mount Cabinet (Figure 6.3) in 6RU sizes are a CISD standard. The two sizes deployed are 26” tall x 26” wide x 12” deep (13050-713) and 36” tall x 26” wide x 12” deep (13050-723).

Figure 6.3

Intelligent Fan Kit (Figure 6.3A) for ThinLine II Wall-Mount Cabinet 4/6 RU size (13051-001) shall be supplied and installed with each ThinLine Wall-Mount Cabinet placed into service.

Figure 6.3A

6.4 Wall-Mounted – 12U, 19U, and 24U Cabinets

The Great Lakes WMCM Series cabinets are a CISD standard for the 12U (GL24WMCMP-B-SH-00-00 – Figure 6.4), 19U (GL36WMCMP-B-SH-00-00), and 24U (GL48WMCMP-B-SH-00-00) heights.

Figure 6.4

6.5 Wall-Mounted Open Frames

Chatsworth Flush-Mounted Vertical Wall Bracket (11754-X19 – Figure 6.5) is a grandfathered standard that was used in trailers and temporary structures in the early 2000s. At the time of writing, Chatsworth no longer shows a part number for this frame in its catalogue suggesting it has been discontinued. The bracket is documented here for reference purposes. A ThinLine II 26” square cabinet or 36” tall cabinet should be used where this bracket would have been specified.

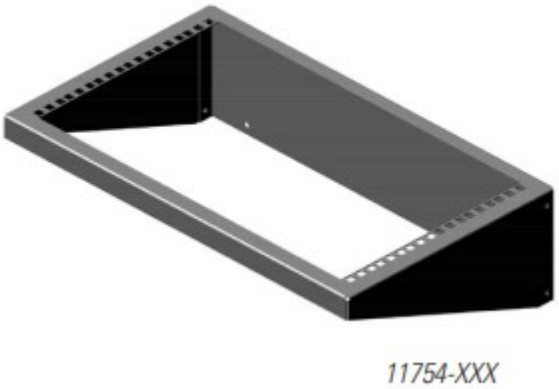

Figure 6.5

6.6 Hinged Panel Mounting Bracket

These brackets are ideal for mounting Cable Patch Panels for applications such as MDT/Toughbook Locker Banks. The 2U (11521-704 – Figure 6.6) will hold a Siemon MAX-PNL-48. The 5U (11524-704) will hold two Siemon MAX-PNL-48s allow for 1U of cable management between the patch panels.

Figure 6.6

INTERNAL

7.0 Change Log

Date	Author	Rev #	Comments
6/10/22	Michael Ribarich	02	Changed references from LIS to CISD. Also changed references from IR to IT. Format changes.
08/01/2024	Ron Devito	03	Updated Vertical Cable Manager, Added 4-post Rack, Wall-Mount Racks and Open Frames, Moreng Rack

Conduit Installation

1. Conduit shall be installed to run in the most direct route possible, preferably with no more than two 90-degree bends between pull points or pull boxes.
2. 90-degree condulets shall not be utilized in conduit runs.
3. Conduit runs shall contain no continuous sections longer than 100 ft.
4. All bends must be long sweeping bends.
5. For conduit with an internal diameter of 2 inches or less, the bend radius must be at least six times the internal conduit diameter.
6. For conduit with an internal diameter greater than 2 inches, the bend radius must be at least ten times the internal conduit diameter.
7. Conduit bends shall be smooth and even and shall not contain kinks or other discontinuities that may have detrimental effects on pulling tension or cable integrity during or after installation.
8. If a conduit run requires more than two 90-degree bends, a pull box shall be provided between sections with two bends.
9. If a conduit run requires a reverse bend (between 100-degrees and 180-degrees), a pull box must be inserted at each end having an angle from 100-degrees to 180-degrees.
10. All conduit ends shall be reamed and fit with an insulated bushing to eliminate sharp edges that can damage cables during installation and service.
11. Conduits that protrude through the structural floor shall be terminated as close to the wall as possible to allow for proper vertical cable routing.
12. Conduits that protrude through the structural floor shall be terminated 1 to 3 inches above the surface.
13. All conduits shall be equipped with a plastic or nylon drag line with a minimal test rating of 200lb.
14. Pull boxes shall be installed in easily accessible locations.
15. Length of pull box shall be a minimum of eight times the diameter of the largest conduit

SECTION 27 41 00 – AUDIOVISUAL SYSTEMS

1.1 SPECIFICATION

A. The following specification for Audiovisual Systems, prepared for Con Edison by their AV Consultant IVCi, with respect to the site location is included with this document:

DESCRIPTION

Orange and Rockland Utilities Inc.
SVOC New Office Addition
Spring Valley, New York

Audiovisual Systems

END OF SECTION 27 41 00

Orange and Rockland Utilities Inc.
SVOC New Office Addition
Spring Valley, New York

Audiovisual Systems

Bidders Instructions

- Please read this audiovisual system specification in its entirety
- The supplied Con Edison spreadsheet must be completed in its entirety and returned as an electronic Excel document as well as hard copy.
- Do not make any Manufacturer, Model Number, or Quantity changes.
- Any suggested substitutions must be submitted on a separate sheet. Do not modify the Con Edison Excel equipment list in any way.
- Con Edison issued drawings must be resubmitted in their original issued form. If the AVC elects to change the provided drawings, all functionality and design intent will remain the responsibility of the AVC.
    - Cable numbering and engineering review is mandatory.
- All cut sheet submittals must identify specific model numbers associated with the proper rooms.
    - Ex. - A projection screen cut sheet must identify the exact size specified if more than one size is listed within the cut sheet.

Table of Contents

I PREFACE 4

A. DEFINITIONS 4
B. QUALIFICATIONS 5
C. BID SUBMITTALS 5
D. LABOR DEFINITIONS & SERVICE SUPPORT REQUIREMENTS 7
E. INSURANCE REQUIREMENTS 11
F. TAX STATUS 11
G. MANDATORY COMPLETION DATE 11
H. BUILDING RULES AND REGULATIONS 11
I. SUBCONTRACTOR LABOR REQUIREMENTS 11
J. SUBCONTRACTOR IDENTIFICATION (INSTALLATION, PROGRAMMING, PROJECT MANAGEMENT) 12

II GENERAL 13

A. PERMITS 13
B. SCHEDULING 13
C. WEEKLY REPORTS 13
D. EQUIPMENT DELIVERY AND STORAGE 13
E. DOCUMENTATION SUBMITTALS 13
F. CODES AND STANDARDS 15
G. STANDARDS 15
H. MAINTAINABILITY 15
I. SAFETY 15
J. EQUIPMENT MODIFICATIONS 16
K. EQUIPMENT SUBSTITUTIONS 16
L. CUSTOM / MODIFIED EQUIPMENT 16

III STANDARDS AND BEST PRACTICES 17

A. SCOPE OF INSTALLATION 17
B. CONTRACTOR PERFORMANCE 17
C. EQUIPMENT RACKS AND CREDENZA 18
D. CABLE DRESS 19
E. CABLE TYPES 20
F. POWER CORDS 20
G. CABLE TERMINATION 20
H. CABLE AND CONDUCTOR PREPARATION 22
I. CONNECTORS 22
J. GROUNDING PRACTICES 23

IV WORKSHEETS 25

A. AVC PROJECT TEAM 25
B. AVC WEEKLY REPORT TEMPLATE 26
C. OWNER FURNISHED SERVICES & EQUIPMENT 28

V AV DRAWING LIST 33

VI AV EQUIPMENT LIST ERROR! BOOKMARK NOT DEFINED.

Introduction

Orange and Rockland Utilities (ORU) is constructing a new 3-story, ~48,000 square foot office addition to their Spring Valley Operations Center (SVOC). The addition will (1) Training Room, (1) Boardroom, (3) Large Conference Rooms, (7) Medium Conference Rooms, and (1) Executive Office.

This request for proposal (RFP) aims to create a comprehensive implementation package

These collaboration spaces will require full visual and audio collaboration and presentation systems

PREFACE

A. DEFINITIONS

Within the context of this specification, the following definitions shall apply:

1. "AV": Refers to Audiovisual.

2. "AV Specifications": Refers to this Audiovisual System Specification and any related drawings and referenced documents and publications.

3. "Client": Refers to:
   Con Edison and/or its designated representatives.

4. "Project": Refers to:
   Con Edison ORU
   Rt.59
   Spring Valley, N.Y.

5. "AV Consultant": Refers to: IVCi

6. "AVC": Refers to the AV Contractor, the entity contracted to implement the scope of work defined in this specification and the Contractor's representatives, including subcontractors, consultants and other entities acting on the Contractor's behalf.

7. "GC": Refers to the General Contractor, the entity contracted to implement all aspects of construction and oversee all trades.

8. The term "furnish" shall mean supply, deliver, store, protect, and demonstrate to the Con Edison AV Team and Client as specified in this document.

9. The term "install" shall mean implement, label, terminate, test, commission, and demonstrate to the Con Edison AV Team and Client as specified in this document.

10. The term "provide" shall mean to furnish and install.

11. The term "shall" is mandatory; the term "will" is informative; the term "should" is advisory.

12. The term “supplied by others” shall refer to materials and work which is related to this sub-contract and for which the AV Contractor is not responsible except as otherwise defined within this specification.

13. The term “Owner Furnished Equipment” or “OFE” will refer to equipment provided by the Client to the AV Contractor. The AV Contractor shall be responsible for installing and integrating this equipment as defined within this specification.

B. QUALIFICATIONS

1. The AVC shall have a minimum of Ten (10) years’ experience with audiovisual systems of similar or greater complexity.

2. The AVC shall be able to provide the necessary professional design, project management, fabrication, and installation personnel to guarantee a complete, functional system in compliance with the intent of this specification.

3. The AVC must be certified for the following: (if product is included in equipment list)
   AVC must provide (3) recent projects related to the requirements below along with AVC personnel and/or contractor for stated examples.

   - Extron Touchlink and IPlink Pro Control System Implementation and Programming
   - Extron GlobalViewer Enterprise Server-Based Resource Management Implementation
   - Biamp Certified Advanced Programmer
   - Crestron DigitalMedia™ Certified Technician (DMC-T) Certification
   - Crestron Authorized Independent Programmer (CAIP) Certification

   Recommended:
   - SynAudCon Training

4. The AVC shall be licensed with all agencies having jurisdiction over the Audiovisual Contractor’s work.

5. The AVC shall be bondable, if required, at 100% of contract value.

C. BID SUBMITTALS (additional details on attached doc)

1. **General Information:**
   a) Bids shall be submitted in accordance with documentation provided.

   b) Bids received by Client which omit any portion of these submittal requirements may be deemed non-responsive.

   c) The cost for preparing the audiovisual system bid shall be borne solely by the bidder. No part of the cost of preparing the bid shall be incorporated into the bid itself.

   d) Bidder warrants upon submission of bid that it has reviewed all construction drawings, specifications and related contract documents for the Project and that the bid submitted is inclusive of all labor, materials and supplies required to deliver the complete operational audiovisual system as specified.

   e) All equipment proposed and supplied by the bidder shall be new and shall meet or exceed the technical and performance requirements outlined within this AV Specification.

2. **Submittal Requirements:**

a) Submit a list of any anticipated work on the Project that bidder may subcontract. For all subcontracted work, bidder shall describe the work and identify the proposed subcontractor. Appropriate qualification information shall be submitted for each subcontracting firm.

6. Bidder shall submit the supplied Con Edison Excel spreadsheet, completed and without change in "Electronic Format" as well as hardcopy. Additional equipment required for a turnkey system must be identified clearly and specifically under separate cover.

7. Bidder shall submit basic functional block diagram(s) illustrating conceptual system architecture where proposed equipment/system deviates from this AV Specification and accompanying documentation.

8. Bid pricing shall include costs associated with providing supplemental warranty support as described in this AV Specification.

9. Bidder shall submit a Warranty Statement clearly identifying any exclusions or conditions affecting warranty of the audiovisual systems. Minimum warranty coverage (Basic Warranty) is defined in the Scope of Work. Bids submitted that do not include Basic Warranty coverage may be deemed non-responsive.

10. Bidder shall submit descriptions and pricing for any supplemental warranty and support services available, including Enhanced Warranty and Maintenance Support as described in the Scope of Work. Costs for supplemental warranty and support coverage shall be itemized separately and identified in the bidder's submittal as indicated on the Bid Form. Client shall retain the right to accept or reject supplemental warranty and support services as proposed up until commencement of Basic Warranty.

11. Bidder shall identify in the bid submittal any long lead equipment items that may adversely affect the project schedule.

D. LABOR DEFINITIONS & SERVICE SUPPORT REQUIREMENTS

The scope of work shall include engineering, project management, fabrication, assembly, software programming, installation, documentation, training, and warranty of the audiovisual systems.

1. **System Confirmation**: The AVC shall provide all system engineering and design necessary to develop the complete systems described herein. Engineering and design shall include preparation of all necessary electronic schematics, hardware drawings, floor box plates, wall plates, aux panels, systems diagrams, schedules, lists and equipment submittals. These documents shall be provided in both hard copy (paper) and soft copy (electronic). Data file formats shall be agreed with the AV Consultant.

2. **Fabrication & Staging**: The AVC shall procure and assemble all hardware and equipment, and any additional materials as required to produce completely functioning systems. OFE devices should be acquired, installed, and tested prior to on-site delivery.

3. **Installation**: The AVC shall install all equipment, cable, wiring, connectors, plates and other material at the Project site per sign-off drawings and specifications.

- **NOTE:** In addition to AVC drawings and documentation the AVC shall have a full copy set of ALL AV drawings and documentation on site throughout the project

a) **Project Management**
The project manager is expected to perform the following duties.
- Participate in AV kick-off meeting
- Review and comprehend in detail all aspects of the project
- Coordinate and manage the AVC's project team
- Coordinate and manage subcontractors (Union, CWA, third party programmers, etc.)
- Attend weekly subcontractor meetings
- Review site conditions
- Issue weekly meeting status reports
- Provide and coordinate delivery schedules
- Coordinate and confirm all equipment colors/finishes with GC
- Coordinate all owner furnished equipment with client as per AVC weekly report

b) **Supervision**
- Participate in AV kick-off meeting
- Review and comprehend in detail all aspects of the project
- Daily coordination of on-site installers
- Request cable, connectors and miscellaneous small parts for on-site installation
- Maintain constant communication with the GC and all other involved trades
- Test and confirm cable and connector integrity

c) **AVC Field Installation (if applicable)**
- Pull all AV cabling
- Terminate all AV cable
- Install all required mounts for flat panels, projectors, projector lifts, projector screens, etc.

d) **Union Installation**

- Pull all AV cabling
- Terminate all AV cable
- Install all required mounts for flat panels, projectors, projector lifts, projector screens, etc.

4. Programming:

a) **Control System Programming**

The AVC shall provide documentation related to personnel and/or sub-contractor performing control programming. The AVC shall perform all software programming required to develop a complete operating system in accordance with these specifications, including all control logic and graphical user interface programming. The AVC shall provide "Graphic User Interface" screen layouts depicting "Look and Feel" for simple operation of all audiovisual systems along with control of lighting systems presets and window shade control.

AVC shall meet with project management team and all consultants interfacing with control systems as stated below. Upon agreement by Client Project Manager, AVC will acquire an acceptance sign-off by the client.

Following Control Systems Programming, Installation and testing, AVC shall provide up to (3) updates to Control System Programming and "GUI" touch panel layout based on client requirements.

Updates shall be provided on but not limited the following schedule.

AVC shall provide Control Systems update 30 to 60 days from the handover date.
AVC shall provide Control Systems update 90 to 150 days from the handover date.
AVC shall provide Control Systems update prior to first year service end date.

Client shall retain full rights to all custom software, programming, and software programming code developed by the AVC as part of the project. This shall include the right to use, reproduce and modify the software and software programming code as reasonably required to operate the audiovisual systems and to support their ongoing maintenance and development.

Pricing shall consist of:

1. Approx. (4) initial on-site development and review meetings.
2. Programming time including all elements for an advanced interactive solution.
3. Attendance for adjustment during checkout
4. Re-visitation for changes of the GUI and operational functionality after sign-off as outlined above

Advanced "Tech" pages must include:

- "Dual "Auto Shutdown Setup (Default EOB & Late Night)
- Assignable Cable Presets with icons/channel numbers
- Audio Conference Presets with text labels and phone numbers
- Lighting and Shade user programmable scenarios
- eControl

b) **Audio DSP Programming**

The AVC shall perform all DSP programming required to develop a complete system. This will include Mix/Minus voice lift where required, Microphone and audio triggers via DSP logic for cameras and other macro requirements.
AVC shall develop program plan with Con Edison AV Team and client.

c) **Audio Testing**

The AVC shall perform RTA testing and calibration of all audio systems regardless of size. Before and after plots of system configurations will be provided during final run through with Con Edison AV Team and before system close out.

5. Close-out: The AVC shall provide technical training for Client's staff, instructing them on AV systems capabilities, maintenance and troubleshooting. Specific structure and scheduling of training provided by AVC shall be established by AVC in cooperation with Client prior to completion of installation.
Before Acceptance Tests are scheduled, the Contractor shall perform his own system checkout. He shall furnish all required test equipment and shall perform all work necessary to determine and/or modify performance of the system to meet the requirements of this specification. When these initial tests and adjustments are completed, the AVC shall notify the Con Edison AV Team the systems are in compliance with the specifications and are ready and complete for Acceptance Tests.

Acceptance Tests: Prior to acceptance of completed system by the Client, the AVC shall demonstrate the operation of the complete system, including all equipment. Both subjective and objective tests may be required by the Client to determine compliance with these specifications. The AVC shall be responsible for providing the test equipment for the tests. Additionally:

Preliminary "as-built" drawings, run sheets (schedules), manuals and documents are to be on hand. There shall be one complete set of these documents furnished to the Con Edison AV Team at this time.

In the event further adjustments are required, or defective equipment is to be repaired or replaced, tests shall be suspended or continued at the option of the Client.

a) **Punch List**
A mandatory on-site meeting consisting of the AVC's project team (Project manager and lead tech) and Con Edison will be scheduled at the project's conclusion to review and resolve all outstanding issues. The goal is to collectively address any and all installation and programming issues, confirm functionality and sign-off.

b) **Training**

The AVC shall provide training for the Client's audiovisual system operators and the maintenance staff. This training shall include all aspects of operation and maintenance adequate to operate the audiovisual system in a safe and efficient manner and perform proper maintenance and repairs.

Factory training by sub-system or component suppliers will be included as appropriate.

All training will be performed on-site by a suitably qualified instructor to personnel designated by the Client.

Include a minimum of 4 hours of Client training per room type in your response.

Operational Training will include, but not be limited to:

i. Equipment operation and function.

ii. Equipment start, stop, and shutdown.

iii. Equipment automatic and manual operation.

iv. Safety related features (if applicable)

v. Basic troubleshooting

c) **Documentation Turnover**

Close-out documentation must include:

a. Owners' manuals in pdf. format
b. Quick Guide' manual in pdf format
c. Latest Control System program source code (including macros) required for a full functional re-install.
d. Latest DSP program source code required for a full functional re-install.
e. Latest AV related drawing in AutoCAD and pdf format

*Close-out documentation must be provided to the end user no later than 4 weeks after occupancy.

6. **Freight/General & Administrative (G&A)**:

a) **Freight**
All required shipping costs including expedited fees based on the construction schedule.

b) **G&A**
Additional ancillary administrative fees not captured within the above breakdown.

7. **Warranty & Support**: The AVC shall provide warranty coverage and support services as follows:

a) Basic Warranty: Shall warrant the audiovisual systems to be free from faults and defects in system design and workmanship. Basic Warranty coverage shall include all custom designed equipment and the overall audiovisual system design and installation. Basic Warranty shall be effective for a period of one (1) year from the date of audiovisual system acceptance by the Client, or from date system is put into use, whichever occurs first. Within the period of Basic Warranty coverage, individual manufacturers' equipment warranties shall apply to all purchased equipment. In the event the manufacturer's warranty has expired on a failed device (equipment warranty of less than one year), the AVC shall be responsible for the actual cost of any required repairs. All manufacturers' equipment warranties shall be effective as of the date of acceptance test completion. If equipment modification by the AVC voids the manufacturers' warranty, the AVC shall assume the equivalent equipment warranty. Response time for Warranty service work shall be no longer than the next business day from date of request for service. The AVC shall warrant that all equipment, materials and components will be new. No used or reconditioned equipment will be acceptable.

b) Maintenance Support (1st Year): Supplemental support to Basic Warranty coverage shall apply for the same period as the Basic Warranty. Maintenance Support shall provide a minimum of two (2) visits, at regular intervals, to perform operational checks of the equipment, to clean any equipment or equipment parts, and to adjust and/or align any equipment or equipment parts as required to maintain optimum system performance. This service shall be in addition to the Warranty Service described above, J.1. and shall be INCLUDED in the bid price.

c) Maintenance Support Agreement (2nd through 5th years) shall be priced and itemized incrementally and as a separate option within submitted bid proposals, in the space provided on the Con Edison spreadsheet. The Client shall have the option of accepting or rejecting the Maintenance Support option. Maintenance Agreement shall include the following, at a minimum:

a. 1 hour telephone response time to requests for emergency service
b. 24-hour on-site response time to requests for emergency service
c. 48-hour on-site response to non-emergency requests for service
    A. NOTE: an emergency is defined as an event that prevents the client from using any or all of the AV systems as they were intended to be used.
d. All labor to diagnose a problem, de-install defective equipment, remove it from customer's site, and send to a repair facility, return repaired equipment to site, re-install and test. Any requisite programming changes shall also be included.
e. Parts required for repairs to equipment are NOT included and shall be priced prior to repairing any defective equipment. Client shall have the option of refusing the repair charges and having the equipment returned to the site at no cost.
f. There shall be no limit to the amount of telephone and on-site support given to the client during the Agreement period for covered repairs.
g. Agreement shall include (4) on-site Preventive Maintenance visits per year, which shall include the tasks described in section J.2. above.

d) AVC is encouraged to offer additional services to the Client. Those services should be described and priced in a separate document and not co-mingled with those requested herein...

Exclusion: Modification or attempted modification to the system by any parties other than the AV contractor shall void any and all warranties on the system.

a. INSURANCE REQUIREMENTS

Please contact the GC for Insurance requirements. Please confirm capability to meet or exceed the stipulated coverage.

b. TAX STATUS

Please contact the GC for tax status requirements.

- All-Inclusive- "Tax on Material & Labor"
- Capital Improvement- "Tax on material only"
- Exempt- "No Tax on Material or Labor"

c. MANDATORY COMPLETION DATE

Please contact the GC for a construction schedule.

d. BUILDING RULES AND REGULATIONS

Please contact the GC for building rules and regulations.

e. SUBCONTRACTOR LABOR REQUIREMENTS

Please contact the GC for AVC on-site installation labor status requirements (Union, Non-Union or CWA).

f. SUBCONTRACTOR IDENTIFICATION (Installation, Programming, Project Management)

Please specify the following for all subcontracted entities:

Contact Name
Company Name
Address
City, State Zip
Phone Number
Email Address

E. GENERAL

A. PERMITS

Permits and Fees: The AVC shall obtain any permits and pay any fees required for the installation of the audiovisual system.

B. SCHEDULING

The AVC shall ensure that all AVC-furnished items are procured, delivered and installed in accordance with the AV Schedule and the overall Project schedule.

C. WEEKLY REPORTS

A. Weekly project progress status reports shall be provided as per Section 5 of this specification.

D. EQUIPMENT DELIVERY AND STORAGE

A. Costs of shipping all AV equipment and related materials (including shipping material to the site as well as costs of unusual off-site storage requirements) shall be borne by the AVC. It shall be the responsibility of the AVC to make appropriate arrangements with the authorized personnel at the site for the acceptance, handling, protection, and storage of equipment delivered to the site.

B. The AVC must confirm all paths from loading dock to elevator capability, to installation area support transportability before the questionable item is procured.

C. The AVC shall make every reasonable effort to protect the AVC's finished and unfinished work against damage or loss during delivery and storage.

D. The security of any equipment and/or tools provided by the AVC for the purpose of installing this system shall be the responsibility of the AVC.

E. The Client shall retain the right to inspect all systems and equipment stored off site.

F. The equipment, whenever possible, shall be built and tested off site to minimize downtime and disruption to the existing facility.

E. DOCUMENTATION SUBMITTALS

A. Within five (5) days of commencement of work on the project, the AVC shall submit to the Con Edison AV Team in writing the information described below:

1. Verification that AVC has reviewed all relevant Project documentation, has surveyed the Project site and is familiar with physical conditions of the Project affecting the work of the AVC.

2. Verification that the project designs and construction documents indicate suitable accommodations for integrating the specified AV systems and equipment. Consideration shall include, but not be limited to, HVAC

requirements, electrical power, grounding/earthing. The statement shall include any noted exceptions, concerns and recommended corrections/modifications.

3. Identification of all critical dimensional, mounting reinforcements and other information associated with AV equipment that is to be physically attached to building structure, either by the AVC or by others.

4. Detailed AV Project Schedule.

B. Prior to fabrication, submit shop drawings and other documentation to the Con Edison AV Team as appropriate for approval by the Client of all custom designs pertaining to the audiovisual systems, including the following:

1. All control panel connector plates and designation strips to be punched, engraved or silk-screened. Drawings shall specify all relevant terminology, engraving, finishes, colors, and materials.

2. Complete revised graphical layouts for the touch screen control panel design.

3. Schematic drawings of custom circuits. (Con Edison AV Team approval of schematic drawings of custom circuits shall not imply acceptance of design to perform desired task.)

4. All equipment modifications. (Con Edison AV Team approval of equipment modifications shall not imply acceptance of design to perform desired function.)

5. All audiovisual system design drawings.

6. Shop and field wiring diagrams, including cable types and functional description.

7. Final equipment rack layouts.

8. Shop drawings for special equipment, including fabrication and installation requirements.

C. Upon completion, provide to Client the following:

1. Manufacturers' equipment manuals for each piece of equipment installed.

2. Operations manual describing basic operation of the AV system. This manual will be utilized by the Client's general staff and system end-users. It is recommended that this document be graphical and written in non-technical terminology for ease of use. It must include a principle of operation for all components of the system, including a detailed description of all functions of the remote-control system. One copy per room shall be provided.

3. "As built" drawings, as hardcopy and reproducible electronic formats.

D. These documents shall be provided in both hard copy (paper) and soft copy (flashdrive, email, etc). Data file formats shall be agreed with the AV Consultant.

f. CODES AND STANDARDS

1. All materials and practices shall be in accordance with the governing standards, requirements and recommendations of all laws, orders, codes and regulations applicable to the AVC.

2. If in the opinion of the AVC, an installation practice is required which is contrary to the specifications or drawings, such installation shall not commence until a written request for change has been made to the Client and the request has received approval.

3. If an item of recommended equipment, condition or installation practice as specified does not meet governing code requirements; AVC shall bring such conflict to the attention of the Con Edison AV Team and shall facilitate resolution of conflict with all parties concerned.

4. AVC shall have a thorough knowledge of governing codes and standards. Lack of awareness of any of the relevant codes and standards will not be accepted as a reason for non-compliance.

g. STANDARDS

1. General standards used in the design and installation of the audiovisual system shall conform to the highest quality Broadcast Industry standards. The following list provides a general indication of the type of industry organizations with published technical standards and is not intended to be all-inclusive.

1.	Infocomm	Audiovisual Communications Industry Association
2.	AES	Audio Engineering Society: Audio Standards
3.	EIA	Electronic Industry Association: Equipment mounting, construction, tooling
4.	IEEE	Institute of Electrical and Electronic Engineers: Electrical/ Signal Standards
5.	NEC	National Electrical Code: Electrical Standards
6.	NCAC	National Council of Acoustical Consultants: Acoustic Standards
7.	ASTM	American Society for Testing and Materials: Test and materials Standards

h. MAINTAINABILITY

The AVC shall provide a fully functioning system that is easily accessible for service while the system is operational. Where this is not practical due to mutually accepted circumstances, service functions will be designed to allow a minimal amount of equipment and support disassembly. The audiovisual system design, construction and installation will allow components to be accessible for inspection, maintenance and repair with a minimal disassembly of other components or surrounding equipment.

i. SAFETY

The audiovisual system will be inherently safe, when operated and maintained in compliance with the AVC provided operations and maintenance / technical manuals. In addition, equipment will meet or exceed governing standards and requirements for safety. This shall include provisions and installation of seismic bracing and restraints.

j. EQUIPMENT MODIFICATIONS

1. The audiovisual systems have been designed to utilize new "off the shelf" equipment. Every effort has been made to avoid the use of custom or modified equipment. However, some AV equipment specified may require modifications to accommodate installation, remote control or other integration requirements.

2. Where equipment must be modified to conform to system specifications and design parameters, the modifications made shall in no way affect the performance of the equipment as published by the manufacturer. Equipment modifications may also be impacted by and shall comply with the terms of other sections of this AV Specification.

k. EQUIPMENT SUBSTITUTIONS

1. Requests for use of alternate equipment to that recommended in the Equipment Specification will be considered on an item-by-item basis. Equipment substitutions will be considered in cases where a specific component of the system is no longer available, or where the alternate equipment is shown to provide equal or greater quality and performance.

2. All proposed equipment substitutions must be submitted to the Con Edison AV Team with AVC's bid. Proposed substitution submittals shall include full information, specifications, and data sheets for the proposed alternative equipment. All equipment shall be new and shall meet or exceed the last published specifications of the manufacturer in all respects.

3. Equipment substitutions will be considered after commencement of work on the Project only where the contracted equipment becomes unavailable, where unanticipated lead times could delay the Project for other legitimate practical considerations. Equipment substitutions submitted after commencement of work on the Project must be approved by the Con Edison AV Team in writing.

4. Con Edison AV Team approval of equipment substitutions shall not imply release of AVC responsibility for meeting all requirements and design objectives as outlined in this AV Specification.

l. CUSTOM / MODIFIED EQUIPMENT

1. It shall be the responsibility of the AVC to provide all appropriate design, engineering and fabrication in the provision of specified custom or modified equipment.

2. All specified custom or modified equipment must be included in the scope of the AVC's work. No portion may be omitted from the scope of the AVC's work. Bids excluding any portion of the custom or modified equipment will be deemed non-responsive.

3. Substitutions of "off the shelf" equipment for specified custom equipment will be considered when submitted per the procedures noted for Equipment Substitutions.

F. Standards and best practices

a. SCOPE OF INSTALLATION

Installation shall include the following:

1. Uncrating, setting in place, fastening to walls, floors, ceilings, counters, or other structures where required of all equipment except as otherwise noted.

2. Interconnect wiring of the components of the system.

3. Equipment alignment and adjustment.

4. All other work whether or not expressly required herein which is necessary to result in a completely tested and operating system.

B. All equipment shall be firmly secured in place unless requirements of portability dictate otherwise. Fastenings and supports shall be adequate to support their loads with a safety factor of at least five (5) times.

C. All boxes, equipment, etc. shall be plumb and square.

b. CONTRACTOR PERFORMANCE

A. All assembly and material cutting shall be limited to a working area specifically designated for this purpose.

B. Cable and wire stripping scrap and conductor strands shall be kept away from sensitive electronic equipment such that loose pieces do not become lodged inside equipment.

A. All racks, consoles, connection boxes and other equipment enclosures shall be cleansed and vacuum cleaned prior to installation of equipment or panels.

B. The AVC shall take measures to protect all cabinets, casework, finished flooring, wall coverings, equipment, etc. from damage resulting from its work. This shall include, but not limited to, the installation of temporary protective coverings. Any such damage shall be corrected by the AVC at no additional cost to the Client.

C. All equipment racks and sub-assemblies shall be substantially constructed at the AVC's premises. This will include, but not be limited to, wiring, labeling, dressing, supports, and ventilation.

D. All spaces shall be cleaned as an ongoing activity. The AVC shall vacuum clean all work areas and remove all debris, scrap and waste at least daily and after any substantial debris accumulation. At the conclusion of the work in a given room area, a final vacuum cleaning of all such access spaces shall be performed. All loose items, including those which were existing at the start of the project shall be removed. Wet mopping shall be performed on flooring only when other dry-cleaning methods are insufficient. No brushing or wet cleaning of equipment shall be permitted.

G. The AVC shall generate any additional drawings or information required for fabrication, installation and wiring of the system.

H. The AVC shall be responsible for the proper alignment, adjustment and calibration of all audiovisual equipment including equipment specified as Owner Furnished Equipment (OFE) and shall provide all personnel and test equipment for the system test and adjust.

I. The AVC shall be responsible for verifying the compatibility of all equipment and related hardware with related work performed by others. This includes, but is not limited to, electrical, mechanical, structural, and all finish work.

J. The AVC shall furnish all software necessary to operate software controlled audiovisual equipment or sub-systems (e.g. remote-control system, audio DSP). Whether produced by the AVC or supplied by a software manufacturer, all software will be installed and tested prior to the delivery of equipment to the site.

c. EQUIPMENT RACKS AND CREDENZA

The AVC shall use equipment racks of required height to mount all necessary equipment.

A. Equipment mounting shall conform to the industry standards of 1-3/4" rack units.

B. The AVC shall only use rack rails that are tapped for #10-32 screws (no clip nuts shall be used). A #10-32 x 3/4" inch black truss head Philips rack screw with nylon washer shall be utilized throughout the facility.

C. The AVC shall implement a general ventilation scheme for all racks in the systems.

D. All racks shall have rear rack rails or an approved alternate 19" mounting system behind the front rack mounting rails. The rear rails shall be parallel to and square with respect to the front rails and shall conform to current industry standards for 19-inch (19") racks. These rails are to be used for any planned or future rear-mounted panels or for equipment items that require rear rack support.

E. All racks shall be sufficient in depth to accommodate all equipment and allow space for signal and power wiring,

F. All racks shall be inspected carefully prior to installation. All rough or sharp edges that may cause injury to personnel or damage equipment or cabling shall be deburred, or a permanent protective covering applied.

G. Provide blank rack panels in all rack openings not occupied by equipment. Blank filler panels shall not exceed three rack units in size. Panel color shall be matte black. Perforated panels may be used to aid in proper ventilation.

H. Allow sufficient space for installation of all owner furnished equipment such as PC's, etc.

I. Allow some space for future expansion where possible. All devices within equipment racks shall be mounted to the equipment rack. No devices shall be resting atop (monitor excepted) or mounted to other devices within the equipment racks unless otherwise noted.

J. Devices will be mounted in the racks in logical order. Generally, signal flow should move from the top of the rack to bottom. Heavier devices should be mounted in the lower portion to ensure that the assembly is not too top heavy. Frequently used devices will be mounted at the optimal elevation for operator use.

K. AVC/Con Edison rack logo panels shall be confined to a single rack unit.

d. CABLE DRESS

A. In general, cable dressing shall be considered from a maintenance standpoint. Suitable service loops shall be provided to allow removal of equipment, or to extend equipment that is mounted in the rack-on-rack slides. Where there is no rear access to the rack mounted equipment, this requirement shall be carefully addressed, and cabling shall be of sufficient length to enable the removal and replacement of any individual piece of equipment with all others in place.

B. It is expected that the AVC will fabricate some portions of the system off-site. Pre-wiring is acceptable provided that the pre-wired assembly can easily be transported to its final location without complication, and without risk of cable or equipment damage. Use of intermediate connections for inter-rack cables is not acceptable.

C. The AVC shall be responsible for determining the proper length of all cables whether manufactured on or off the job site.

D. The AVC shall determine the desired method of securing cables. All of the following requirements must be met by the system:

1. Velcro cable ties are the preferred method of cable lacing. Lay-in systems are not acceptable except as applied to a horizontal cable tray.

2. Wires and cables shall be installed in a neat and orderly fashion, with like cable types following similar paths. Groups of cables shall be neatly combed and harnessed. Harnessed groups of cables shall be anchored at suitable intervals to reduce and relieve wire strain, especially strain on connections. Adequate service loops shall be provided at all cable endpoints.

3. Some rack-mounted equipment utilizes slide assemblies for front extension while in operation. For this type of mounting, additional, carefully dressed service loops on all cables shall be provided and installed with spring operated cable retractor assemblies to gather and recoil the service loop.

4. For all schemes of cable routing, no point in the path shall be subjected to a bend radius of less than eight (8) times the cable diameter, or minimum cable bend radius specified by the manufacturer.

5. Captive cables shall not be laced in such a manner as to prevent removal of the equipment to which they are captive.

6. Wires and cables shall be segregated according to signal type. In addition, audio cable shall be subdivided into three (3) classes: microphone level circuits, line level circuits, and speaker level circuits.

7. Microphone level audio circuits shall be kept at least three inches (3”) from any other type of parallel signal circuits and at least six inches (6”) from any parallel AC power circuits.

8. Speaker level audio circuits shall be kept a minimum of three inches (3”) from line level audio and AC power circuits. All other signal circuits shall be kept at least three inches (3”) away from any parallel AC power circuits.

9. Where circuits of different types must cross, they shall do so at right angles and then return to the above required separations in as short a distance as possible.

10. Conductors, wires, and cables shall be continuous between termination points. Splices are not acceptable.

11. Cable tie and lacing installation shall be accomplished using hand tools specifically designed to apply proper tension to the cable tie, and to cut the end of flush with no protruding sharp edges. The AVC’s field

supervisor shall spot check assemblies using cable ties both visually and by touch, thereby detecting any sharp edges of improperly cut cable ties. Install cable ties on all cable runs of two or more cables which are not supported by raceway, cable tray, or other means. Place cable ties approximately six inches (6”) apart. Do not use more cable ties than are necessary for a neat installation. Cable ties shall not be applied with excessive force that may damage or deform sensitive and fragile cables.

12. Rack mounting rails shall not be used for cable lacing. Lacing bars and/or tie mount bases mounted to cabinets or console shall be provided where appropriate.

e. CABLE TYPES

A. All cables installed shall meet appropriate governing codes and standards.

B. See Drawings for recommended cable specifications

C. The AVC is encouraged to suggest alternate cable types where significant cost savings may be realized without any loss of quality, reliability and performance. Alternates must be approved by the Con Edison AV Team prior to use.

D. The AVC shall determine building and other regulating authority requirements for cables installed as part of the AV scope of the Project. This requirement applies to cables in return air plenums as well as other areas. If the cable type indicated does not comply with these requirements, the AVC shall propose alternate cable types, and/or encasement in complying raceways or conduits. All cabling not in conduit shall be plenum-rated.

f. POWER CORDS

A. All equipment power cords shall terminate in a standard plug that shall be wired in compliance with governing codes and standards.

B. The power cord connector type at the equipment shall be provided by the manufacturer. Custom power connectors shall not be ordered. If the manufacturer provides a choice, a removable power cord that attaches to the equipment with an IEC 320/CEE 22 connector is preferred.

C. The power cord may be laced to the rack as long as the cord is removable at the power connector on the piece of equipment. This is to allow removal of the equipment without undoing the cable lacing**. Power cords shall not be laced in the same bundle with signal or control cables.** If the power cord is an active component of the equipment, the cable shall be dressed separately from all other cables terminating at the equipment to facilitate easy removal of the equipment.

D. All power cords shall be plugged into an AC power distribution strip which will be pre-wired into the rack prior to delivery to site.

g. CABLE TERMINATION

A. Wire and cable termination shall be performed in accordance with Broadcast Industry Standards and the guidelines of generally accepted installation practices.

B. With respect to audio equipment interconnects, the AVC shall make every effort to use equipment with balanced inputs and outputs. When this is not possible, such as the case to meet specification, the following are recommended (in order of preference):

1. An electronic balancing device (professional interface) or balancing transformer should be utilized.

2. In the case of an unbalanced output driving a balanced input, forward referencing should be utilized.

3. An active-balanced to unbalanced interconnect is not recommended.

C. It is ultimately the AVC's responsibility to choose the best wiring practices to achieve maximum sonic quality.

D. Wire and cable termination shall include all aspects of equipment connection, including, but not limited to, the following:

1. Wire and cable length.

2. Protective jacket removal.

3. Conductor separation, dressing and trimming.

4. Conductor stripping.

5. Connector device installation including, but not limited to, the following:

a. Conductor termination

b. Shell assembly

c. Strain relief installation

d. Locking/latching device installation

6. Cable designation installation on each distinct wire or cable, except where the color code or pair number of individuals of pairs of a multi-pair eliminates the need for this.

a. These shall be installed within two inches of connectors unless this interferes with disassembly of the connector.

b. These shall be installed in such a manner as to be visible without unlacing any harnesses.

7. Continuity affirmation

8. Mating of connecting devices to equipment

E. It is the responsibility of the AVC to determine and confirm the type and extender of all required mating connectors. Since manufacturers of equipment may exercise their right to make changes in connector types and wiring, it shall remain the responsibility of the AVC to verify this aspect of the design prior to cable fabrication and installation.

E. Exposed portions of shield shall be protected with PVC heat shrinkable sleeving. Exposed ends of outer jackets on shielded cables shall be insulated with sleeves to eliminate the possibility of portions of the cut off foil shielded touching adjacent shields or metal. Either rubber "Kellerman" type sleeves or heat shrink sleeves shall be used. Bare shield drain wires shall be insulated with small diameter clear Teflon or PVC heat shrink (as appropriate) from under the sleeve to within 0.125 inch of the point of termination.

h. CABLE AND CONDUCTOR PREPARATION

A. All cables shall be prepared in such a way that the individual conductors, shield or their insulation are not nicked or cut in any way. The cable outer jacket shall be cut square.

B. Insulation shall be removed from conductor in such a manner that conductor strands shall be nicked to the extent that base metal shows through the plating and wire strands remain in the original lay and are not combed out. The conductor's insulation shall be cut square within ¼" of the outer diameter of the insulated conductor. If required, the conductor shall be tinned with a minimum amount of 60-40 or 63-37 solder (tin/lead with resin flux).

i. CONNECTORS

Only premium quality cable connectors shall be used. All cable mounted connectors shall be covered by a connector hood or shall have crimp ferrules which securely grasp the cable outer jacket to provide protection to the rear connections made on the connector and provide strain relief for the cable. All connectors shall have incorporated a mechanical means of attaching the connector to its mate to assure that a connector will not fall off unless intentionally removed.

A. Audio Connector Requirements - Circular (XLR type): These shall be premium quality connectors with tarnish resistant contact surfaces. No connection shall be made to the shell unless specifically called out in the drawings.

B. Video Connector Requirements: Only connectors with tarnish resistant contact surfaces shall be used. Kings TRS finish ("bright nickel") or equal is recommended. The center conductor pin and socket shall be captive and finished with gold or silver surfaced over nickel. All connectors shall be specified by the manufacturer as to be acceptable with the specific cable being used. Kings crimp BNC connectors or approved alternate shall be used.

C. Panel Mounted Connectors: Care shall be taken to ensure the sleeves of panel mount connectors do not make contact with the mounting panel.

1. Audio (microphone, line level): Locking XLR type.

2. Audio (speaker level): locking/latching "Speakon" type.

3. Audio (line level): ¼" diameter locking/latching, tip/ring/sleeve

4. Video: BNC type. Recessed panel mount type recommended.

5. Serial Data: DB-9 or DB-25

SOLDER CONNECTIONS

A. Only the finest quality 60-40 or 63-37 solder (tin/lead) with rosin flux shall be used. The solder shall be manufactured by Kester, Ersin, or approved alternate, and shall be designed for electronic use. Solder fillets shall wet and flow around conductor and terminal. In no case shall the general outline of the conductor be visible in excessive solder. The insulation shall not be charred, melted or burned by the soldering operation. There shall be no evidence of either lead or terminal contamination. The final solder joint shall be bright and shiny and shall show no evidence of being a "cold" joint.

C. Mechanical connections made to terminals prior to soldering shall be the minimum required to reliably retain wire, usually a simple bend around solder eyelet or post. Avoid practice of multiple wraps on solder terminals, as that practice makes conductor removal very difficult after soldering.

INSULATION DISPLACEMENT CONNECTIONS

A. Insulation displacement connections such as ribbon cables and the telephone connector technology shall only be installed with termination tooling as specified by the connector manufacturer. If shown in the connector manufacturer's data, the controlled-cycle crimp tool shall be selected. If the manufacturer has a multi-conductor mass-termination tool available, this shall be selected for all connectors of ten pins or more.

B. Individual conductors of cables installed on terminal blocks shall not be stripped and shall be punched down with a spring loaded impact tool designed for this specific purpose. Bare cable conductors shall be insulated with Teflon, PVC heat shrink or other insulating sleeve (as appropriate) prior to being punched down on terminal block. During the punch down process, the free end of the conductor shall be cut off, and the installer shall ascertain that this cut off end is not left within the block or block assembly.

C. Only cables designed specifically for insulation displacement termination with the specific termination device employed shall be used.

CRIMP CONNECTIONS

A. Where crimp connectors are utilized, they shall be installed using the manufacturer recommended controlled cycle crimp tool that assures that the proper crimp pressure has been applied. The AVC shall develop a procedure to ensure that the crimp tooling is properly checked for compliance with the manufacturer's standards, and that it is producing crimp-type connections within the required tolerances. The frequency of this depends on the usage and on the length of time a particular tool holds its calibration.

D. Only tooling recommended by the manufacturer shall be used. Only pins and connectors of the proper size and design for the cable to which they are to be applied shall be used. There shall be no abnormal deformation of the contact during the crimping operation. There shall be no damage to the contact during the crimping operation that could interfere with its retention in its shell or its mating. There shall be no damage done to the conductor which either severs strands or exposes the individual strands base metal by the crimping operation.

SCREW CONNECTIONS

A. Only insulated crimp on spade terminals shall be used for application to barrier strips. Multiple gang lugs or ring lugs are not acceptable for this purpose. This is only applicable to stranded conductor wires. It is suggested that stranded conductor wire be "double over" on the crimp end prior to crimping. Solid conductors may be attached directly to the barrier strip.

B. All conductors shall be stripped prior to installation underneath screws on terminals. Unlike the stranded control cable, solid conductor wire does not require crimp lugs on individual conductors. All screw terminated solid connectors shall be wrapped in the same direction as screw rotation during tightening.

j. GROUNDING PRACTICES

A. The audiovisual system will be serviced by the earthing conductor that is provided with the mains supply.

1. All devices in the audiovisual system racks will be serviced with a grounded AC outlet. Devices having two (2) prong power cords will also have a fourteen (14) gauge green copper wire connected from the chassis to the grounded copper buss bar mounted to the equipment rack frame. Under no circumstances will the prong of a three (3) prong power cord be removed.

2. Audio cables shield shall be connected to ground at one point only. Exceptions may be made for phantom powered microphones and some ICM and IFB systems. This ground point shall be at the system ground of the destination device, which shall be strapped to the system ground in the rack. For intra-rack wiring this requires the shield to be connected at both ends but grounded at only one end.

3. All video receptacles shall be insulated from the mounting panel, outlet box, or wire way. Unless otherwise detailed, this shall be accomplished by using insulated-from-panel type receptacles.

4. The AVC should take care to consider ground references within each device and the grounding factors on site.

G. WORKSHEETS

A. AVC PROJECT TEAM

Project Name: _____

Project Location: _____

Sales Person	
Name:	
Street Address:	
City, State, Zip Code:	
Phone Number:	
Cell Phone Number:	
Email Address:	

Project Manager	
Name:	
Street Address:	
City, State, Zip Code:	
Phone Number:	
Cell Phone Number:	
Email Address:	

Engineer	
Name:	
Street Address:	
City, State, Zip Code:	
Phone Number:	
Cell Phone Number:	
Email Address:	

Lead Technician	
Name:	
Street Address:	
City, State, Zip Code:	
Phone Number:	
Cell Phone Number:	
Email Address:	

Programmer	
Name:	
Street Address:	
City, State, Zip Code:	
Phone Number:	
Cell Phone Number:	
Email Address:	

Service Manager	
Name:	
Street Address:	
City, State, Zip Code:	
Phone Number:	
Cell Phone Number:	
Email Address:	

Owner/President	
Name:	
Title:	
Street Address:	
City, State, Zip Code:	
Phone Number:	
Cell Phone Number:	
Email Address:	

Other	
Name:	
Title:	
Street Address:	
City, State, Zip Code:	
Phone Number:	
Cell Phone Number:	
Email Address:	

B. AVC WEEKLY REPORT TEMPLATE

The following weekly report shall be distributed by the AV Contractor to the Con Edison AV Team and GC one day prior to the weekly design meeting for the duration of the project.

Task		Date Completed	Comments
1	Kick-Off Meeting		
2	Submit AV Project Team Form		
3	Submit AV equipment cut sheets		
4	Submit AV shop drawings		
5	Initial Control system programming meeting		
6	Order long lead items and immediately required equipment		
7	Order remaining equipment		
8	Acquire, review and coordinate millwork and furniture shop drawings for AV rack fit and finish, ventilation and any grommet holes for pass-thru cabling		
9	Deliver microphone, illuminated collar and table hatch components to table manufacturer		
10	Acquire, review and coordinate Lutron/Programmable lighting shop drawings for correct low voltage interfaces and control system programming		
11	Request IP addresses from Client (Must be completed minimally 4 weeks prior to occupancy)		
12	Request “Owner Furnished” PC’s from Client (Must be completed minimally 6 weeks prior to occupancy)		
13	Request CTV set-top-boxes from Client (Must be completed minimally 6 weeks prior to occupancy)		
14	Submit touch panel layouts to Con Edison & Client (Must be completed minimally 6 weeks prior to occupancy)		
15	Deliver specialty back boxes (Touch panel, display, etc.)		
16	Deliver projection screens, lifts and ceiling speakers		
17	Field confirm AV related infrastructure (Conduit, J-Boxes, Uni-strut, Blocking) (Provided by others) is installed and accurate		
18	Field confirm AV related Power (Provided by others) is installed and accurate		

19	Field confirm AV related Data (Provided by others) is pulled and quantities accurate
20	Field confirm AV related CTV coax (Provided by others) is pulled and quantities accurate
21	Field confirm AV related Analog POTS lines (Provided by others) are pulled and quantities accurate
22	Field confirm AV related ISDN/PRI lines (Provided by others) are pulled and quantities accurate
23	Field confirm lighting and shade low voltage interfaces are installed (Provided by others)
24	Field confirm AV closet ventilation is provided as coordinated (Provided by others)
25	Deliver and install flat panel and projector mounts
26	Deliver and install AV cable and connectors
27	Stage and test racks at AVC's shop
28	Deliver and install AV racks
29	Acquire and integrate "Owner Furnished Equipment"
30	Terminate all cabling
31	Deliver and install flat panels and projectors
32	Complete installation
33	Testing
34	Con Edison AV Team review
35	Punch list
36	Sign off
37	Client training
38	Deliver close-out documentation

AV Site & Network Checklist

Company:

Address:

City: **State:**

Section 1 – Network Information for AV & Visual Conferencing Systems

☐ H.323 ☐ H.264 ☐ H.265

1) Local Network Carrier (telephone co.):

2) Carrier Contact Name: Telephone #:

Section 2 – IP Information for Audio Visual Devices

IVCi will require outside access into your corporate LAN for programming of IP controllable devices and / or to upload Firmware / Programming on days we are scheduled to be onsite. Additional requests for outside access may be requested to test or tweak devices that have been recently installed (additional requests will be made in advance). Please inform your IVCi Project Manager if there are any corporate policies that IVCi should be made aware of to obtain outside access.

CONTACT INFORMATION:

Network Administrator: _____ Contact's Phone #: _____

The Network Administrator must be available on dates we are scheduled to be onsite. Please make sure that the Network Administrator is made aware of the installation date(s).

Will IVCi be given outside access to your LAN for programming? ☐ Yes ☐ No

Is there a Network Jack located within **6-feet** of **each** device listed below? ☐ Yes ☐ No

If you are unsure of the device location please consult your IVCi Project Manager. Network Jack locations will be specified in the Project System Drawings.

☐ Check here if a DHCP Server is being used to dynamically assign IP Addresses

If Static, please fill out the below information

Device Type	IP Address	Subnet Mask	Default Gateway Address
Video Conferencing System			

Completed By: _____ Date: _____

Section 3 – Audio Conferencing System Requirements

If your system includes Audio Conferencing, an Analog Phone line is required within 6-feet of audio conferencing system. Is there an Analog Phone Jack (POT's Line) within 6-feet of audio conferencing system?

☐ Yes ☐ No

If you are unsure of the device location, please consult your IVCi Project Manager. Analog Jack locations will be specified in the Project System Drawings.

Analog Phone Number:	

Do you have to dial a number to get an outside line? ☐ Yes ☐ No

If you answered yes to the above, please identify the number: **NUMBER**: _____

Completed By: _____ Date: _____

Company:

Address:

City: **State:**

Section 1 – Network Information for AV & Visual Conferencing Systems

☐ H.323 ☐ H.264 ☐ H.265

1) Local Network Carrier (telephone co.):

2) Carrier Contact Name: Telephone #:

Section 2 – IP Information for Audio Visual Devices

IVCi will require outside access into your corporate LAN for programming of IP controllable devices and / or to upload Firmware / Programming on days we are scheduled to be onsite. Additional requests for outside access may be requested to test or tweak devices that have been recently installed (additional requests will be made in advance). Please inform your IVCi Project Manager if there are any corporate policies that IVCi should be made aware of to obtain outside access.

CONTACT INFORMATION:

Network Administrator: _____ Contact's Phone #: _____

The Network Administrator must be available on dates we are scheduled to be onsite. Please make sure that the Network Administrator is made aware of the installation date(s).

Will IVCi be given outside access to your LAN for programming? ☐ Yes ☐ No

Is there a Network Jack located within **6-feet** of **each** device listed below? ☐ Yes ☐ No

If you are unsure of the device location please consult your IVCi Project Manager. Network Jack locations will be specified in the Project System Drawings.

☐ Check here if a DHCP Server is being used to dynamically assign IP Addresses

If Static, please fill out the below information

Device Type	IP Address	Subnet Mask	Default Gateway Address
Video Conferencing System			

Completed By: _____ Date: _____

Section 3 – Audio Conferencing System Requirements

If your system includes Audio Conferencing, an Analog Phone line is required within 6-feet of audio conferencing system. Is there an Analog Phone Jack (POT's Line) within 6-feet of audio conferencing system?

☐ Yes ☐ No

If you are unsure of the device location, please consult your IVCi Project Manager. Analog Jack locations will be specified in the Project System Drawings.

Analog Phone Number:	

Do you have to dial a number to get an outside line? ☐ Yes ☐ No

If you answered yes to the above, please identify the number: **NUMBER**: _____

Completed By: _____ Date: _____

CABLE TV Information (General Information)			
Will you be using CABLE, DIRECTV or Other?	Client To Select	If Other, please specify	Client To Specify
Standard Definition or High Definition:	Client To Select		
Who is your service provider?	Client To Specify		
Note: • Tuners "must" contain a Component Video and Composite Video Output • Customer must provide cable tuners • "Vertical" risers and "Horizontal" runs are supplied by others			

Analog Phone Line (POTS) Information			
Phone Number of Analog Line 1:	( ) -		
Wall Plate ID:		Jack ID:	
Phone Number of Analog Line 2:	( ) -		
Wall Plate ID:		Jack ID:	

CABLE TV Information			
Quantity of tuners required:	Con Edison To Specify		
Dedicated PC Information			
DHCP IP address required:			
Wall Plate ID:		Jack ID:	
Note: Customer needs to provide the following: • Select VGA port(s). • Select DVI port(s). • A minimum of Select USB ports for the AV application.			

Control System Information			
Static IP address:	. . .	Subnet Mask:	. . .
Wall Plate ID:		Jack ID:	

H. AV DRAWING LIST

The following is a list of drawing sets accompany this specification:

New SVOC Boardroom
New SVOC Training Room
New SVOC Large Conference Room
New SVOC Medium Conference Room
New SVOC Executive Office

AV EQUIPMENT LIST

New SVOC Boardroom:

Quantity	Manufacturer	Part Number	Description
4	AVPro Global	AC-EX70-444-KIT	AVPro Global HDBaseT (CAT6) Transmitter ONLY. ICT 18G 70m 4K (100m HD) Slim TX with I-Pass Bi-Dire
1	AVPro Global	AC-AXION-X	AVPro Global AC-AXION-X Empty Chassis for 16x16 HDBaseT Matrix
2	AVPro Global	AC-AXION-IN-HDBT	AVPro Global 2 100M 2310 HDBT Receiver Input Axion Card
1	AVPro Global	AC-AXION-OUT-AUHD	AVPro Global 2 HDMI 2.0b output Card
2	AVPro Global	AC-AXION-IN-AUHD	AVPro Global 2 HDMI 2.0b Input Card
1	Barco	R9861522US	Barco Clickshare CX-50 Set US TAA Compliant
1	CABLES TO GO INC	54175	CTG - 3m USB 3.0 A Male to B Male Cable (9.8ft)
1	CABLES TO GO INC	54172	Cables to Go - 3m USB 3.0 AM-AM CBL BLK
2	CHIEF MANUFACTURING INC.	CMA101W	Chief - 1.5 DESIGNER CEILING PLATE
2	CHIEF MANUFACTURING INC.	CMS012W	Fixed Pipe 12"
2	CHIEF MANUFACTURING INC.	PAC501B	In-Wall Swing Arm Accessory
2	CHIEF MANUFACTURING INC.	PNRUBIW	Chief Dual Arm Swing Wall Mount
4	Crestron Electronics	IV-CAM-P20-B	1 Beyond p20 PTZ Camera, 20x Optical Zoom, Moon Gray
1	Crestron Electronics	IV-SAM-VXP-1B	1 Beyond Automate VX Pro Multi-camera media processing solution with voice-activated switching.
1	Crown	CT-8150	Eight-channel, 125W @ 4Ω Power Amplifier
6	Extron	70-1184-02	Extron Cable Cubby 1202 Black AC Module Not Included

1	Extron	60-1913-01A	Extron IPCP Pro xi Control Processor w/LinkLicense for User Interfaces Upgrade
1	Extron	60-1565-02	Extron - 10" Tabletop TouchLink® Pro Touchpanel - Black
1	Extron	60-1566-02	Extron 10" Wall Mount TouchLink® Pro Touchpanel - Black
6	Extron	60-1891-01	Extron - US (2) AC (1) USBC (1) USBA Outlets 12 A Circuit Breaker Integrated PS 2 Outlets Under
1	Extron	70-1067-01	Black Collars for Cables and Retractors Qty. 10
1	Icron Technologies	3104PRONA	Icron USB 3-2-1 Raven 3104 Pro - NA Icron 4 Port Pro USB 3-2-1 CAT 6a/7 Extender System 100-240V Ad
1	INOGENI	4KX-Plus	INOGENI 4KX-PLUS - Convert Ultra HD to USB 3.0 with an HDMI loop and external power
1	INOGENI	TOGGLE	INOGENI Toggle USB 3.0 Switcher
1	Juice Goose	RX100-20A	Juice Goose JG9 19 Inch Rack Mounted Power Module with 15 or 20 AMP Capacity - 9 Outlets
1	LIBERTY WIRE AND CABLE INC	IVCi-EUSS-QR-WALLDISP	IVCi Evolve - QR Code Wall Display
1	MIDDLE ATLANTIC PRODUCTS INC.	CFR-14-18	Middle Atlantic Rack
1	MIDDLE ATLANTIC PRODUCTS INC.	UQFP-4RA-I/O	Middle Atlantic - UQFP INTAKE/EXHAUST
1	MIDDLE ATLANTIC PRODUCTS INC.	PD-815SC-NS	Middle Atlantic - 8 OUTLET SINGLE 15 AMP CIRCUIT SLIM POWER STRIP W/9' CORD FITS RACKS THAT ACCEPT
1	MIDDLE ATLANTIC PRODUCTS INC.	5-RS18	Middle Atlantic - Low Friction Runner Kit for 18" Deep CFR
2	Netgear	M4250-10G2F-PoE+	Netgear AV Line M4250-10G2F-PoEplus 8x1G PoEplus 125W 2x1G and 2xSFP Managed Switch (GSM4212P) - 10
2	Planar	998-3709-00	URX100 100in 4K LCD 700nits 24x7
2	POLYCOM INC.	7200-85860-001	Poly G7500 Base Unit (No Cam) Maint Req
1	POLYCOM INC.	2200-30760-001	Poly - TC8 Touch Control for G7500/Studio X
1	QSC LLC	SL-DAN-32-P	QSC - Q-SYS Software-based Dante 32x32 Channel License Perpetual.
1	QSC LLC	SL-QSE-110-P	QSC - Q-SYS Core 110 Scripting Engine Software License Perpetual
1	Q-SYS	Core8	DSP
2	Shure	MXA-920W-S	Beamforming Ceiling Microphone
12	SOUNDTUBE ENTERTAINMENT INC.	CM62-EZ-II-WH	SoundTube 6.5" treated fiber cone with coaxial 1" silk dome tweeter SpeedWing rapid install. Shallo

New SVOC Large Conference:

Quantity	Manufacturer	Part Number	Description
1	Biamp	Tesira AMP-A460H	4-channel, 60W half-rack amplifier
1	Biamp	Tesiraforte X-400	Meeting Room DSP with 4 integrated PoE+ ports; AVB/Dante, 2x2 analog I/O, Stereo USB, 4 channels of AEC; includes Biamp Launch automatic discovery and tuning
2	C2G	C2G10455	10ft 8K HDMI Cable with Ethernet - Performance Series Ultra High
3	C2G	C2G10454	6ft 8K HDMI Cable with Ethernet - Performance Series Ultra High
2	Chief	PAC501B	LFP in Wall
2	Chief	PNRIWUB	PNRIW with PSBUB
1	Crestron	HD-RXC-4KZ-101	DM® Essentials 4K60 4:4:4 Receiver for HDMI®, RS-232, and IR Signal Extension over CATx Cable
1	Crestron	HD-TXC-4KZ-101	DM® Essentials 4K60 4:4:4 Transmitter for HDMI®, RS-232, and IR Signal Extension over CATx Cable
1	Extron	26-723-06	USB-C® to USB-A 5 Gbps Cable, 6' (1.8 m)
1	HP Poly	83Z50AA#ABA	Poly G7500 VCS US/CA
1	HP Poly	875J5AA#AC3	Poly TC10 WHT
1	HP Poly	9W1A6AA#AC3	Poly E60 SCMR
1	Lightware	13740032	Superspeed Type-A to USB Type-C cable 2m long USB3.1 Gen1 5Gbps
1	Middle Atlantic	PDX-215C-SP	15A 2 OUT SERIES SURGE COMPACT
2	Middle Atlantic	CFR-16-18	16 SPACE,CABINET FRAME RACK,18"DEEP
1	Misc	Control Parts	Control Parts
1	Misc	Rack Parts	Rack Parts
1	Misc	Cables-Misc Hardware	Cabling and Miscellaneous Parts
1	Netgear	M4250-10G2F-PoE+	Netgear AV Line M4250-10G2F-PoEplus 8x1G PoEplus 125W 2x1G and 2xSFP Managed Switch (GSM4212P) - 10
2	Shure	MXA920W-S	Ceiling Array Microphone, Square, White, 24 inch
2	Sony	FW85BZ30L	85" 3840x2160 4K 440nit,24/7 display
6	SoundTube	CM82-EZ-II-WH	8" 2-way In Ceiling Speaker in White
1	SurgeX	SX-1115-RT	SurgeX 1Ru, 9 Outlet, 15 A, W/Remote

New SVOC Training Room:

Quantity	Manufacturer	Part Number	Description
1	Epson	EB-PQ2010W	10K Lumen LCD Projector
1	Epson	ELPLX02S (V12H004Y0B	Ultra Short Throw Lens
1	Crestron	DM-NVX-D200	DM NVX® 4K60 4:2:0 Network AV Decoder with Scaler
1	O.F.E. Microsoft	Surface Hub3	Surface Hub3 Board
1	Steelcase	STPM1WALLMT	Surface Hub3 Wall Mount
1	Crestron	DM-NVX-E30	DM NVX® 4K60 4:2:0 Network AV Decoder with Scaler
1	Chief	CMA345	Ceiling Mount
1	Chief	PAC525FBP2	In-Wall Storage Box with 2 Receptacle Filter & Surge
2	C2G	C2G10454	6ft 8K HDMI Cable with Ethernet - Performance Series Ultra High
2	Crestron	DM-NVX-D200	DM NVX® 4K60 4:2:0 Network AV Decoder with Scaler
2	Shure	MXA920W-S	Beam Forming Ceiling microphones
1	Shure	MXWAPX4	Wireless Microphone Access Point Transceiver
1	Shure	MXWNDX	Wireless Microphone Network Charging Base
1	Shure	MXW2X/SM86	Wireless Hand Held Microphone
1	Shure	MXW1X	Wireless Belt Pack Transmitter
15	Soundtube	CM62-EZ-II-WH	Ceiling Speakers
2	Bose	EM90	Ceiling Speakers
1	Crown	CT8150	8-Channel Rackmount Power Amplifier (150W/Channel @ 8 Ohms)
1	Crown	XLC-2500	Two Channel Amp - 100 Watts at 8 ohms
2	Biamp Systems	Tesiraforte AVB CI	Audio DSP
1	NETGEAR	GSM4230UP-100NAS	M4250 POE++ MNGD SWITCH PERP
1	HP Poly	83Z50AA#ABA	Poly G7500 VCS US/CA
1	HP Poly	875J5AA#AC3	Poly TC10 WHT
2	Magewell	32070	USB 2.0/3.0 DONGLE, 1-channel HD/3G/2K SDI. Plug and Play. Windows/Linux/Mac. Replaces p/n 32021 (XI100DUSBSDI).
1	Crestron	DM-NVX-E20-2G-B-T	DM NVX® 4K60 4:2:0 Network AV Encoder, Wall Plate, Black Textured
2	Crestron	IV-CAM-I12-B	Crestron 1 Beyond I12 PTZ Camera, 12x Optical Zoom, Moon Gray
2	Vaddio	535-2000-245	Thin Profile Wall Mount Long
3	Crestron	DM-NVX-E30C	DM NVX® 4K60 4:4:4 HDR Network AV Encoder Card
1	Crestron	DM-NVX-D30C	DM NVX® 4K60 4:4:4 HDR Network AV Decoder Card
1	Crestron	DMF-CI-8	DigitalMedia™ Card Chassis for DM-NVX-C & DMCF, 8 Slots
1	Crestron	CP4N	4-Series™ Control System
4	Extron	60-1927-02	One US AC Outlet, 12 A Circuit Breaker, and 2 Outlets Under
4	Extron	70-314-17	Single Space MAAP - Black: One RJ-45 Female to Punch Down for CAT 6
1	Middle Atlantic	BGR-2527LRD	Complete Rack System

New SVOC Medium Conference Rooms:

Quantity	Manufacturer	Part Number	Description
1	C2G	C2G10454	6ft 8K HDMI Cable with Ethernet - Performance Series Ultra High
1	C2G	CG54172	3m USB 3.0 AM-AM CBL BLK
2	C2G	C2G10455	10ft 8K HDMI Cable with Ethernet - Performance Series Ultra High
1	C2G	C2G10454	6ft 8K HDMI Cable with Ethernet - Performance Series Ultra High
2	Chief	TS525TU	Large THINSTALL Dual Swing Arm Wall Display Mount
1	Crestron	HD-TXU-4KZ-211-CHGR	DM® Essentials 4K60 4:4:4 Transmitter and 2x1 Auto-Switcher for HDMI®, USB-C® DisplayPort™, and USB 2.0 Signal Extension over CATx Cable with Device Charging
1	Crestron	HD-RXU-4KZ-101-E	DM® Essentials 4K60 4:4:4 Receiver for HDMI®, USB 2.0, and Ethernet Signal Extension over CATx Cable
1	HP Poly	A4MA7AA#ABA	Poly X72 AVB wTC10K US/CA
1	Misc	Cable-Misc Hardware	Cabling and Miscellaneous Parts
1	Lightware	13740032	Superspeed Type-A to USB Type-C cable 2m long USB3.1 Gen1 5Gbps
1	Lightware	13740032	Superspeed Type-A to USB Type-C cable 2m long USB3.1 Gen1 5Gbps
1	Middle Atlantic	PDX-215C-SP	15A 2 OUT SERIES SURGE COMPACT
2	Sony	FW75BZ30L	75" 3840x2160 4K 440nit,24/7 display
2	Windy City	IVCI-DISPLAY-MT-KIT	Display Mounting Kit

New SVOC Executive Office:

Quantity	Manufacturer	Part Number	Description
1	C2G	C2G10454	6ft 8K HDMI Cable with Ethernet - Performance Series Ultra High
1	C2G	CG54172	3m USB 3.0 AM-AM CBL BLK
1	C2G	C2G10455	10ft 8K HDMI Cable with Ethernet - Performance Series Ultra High
1	C2G	C2G10454	6ft 8K HDMI Cable with Ethernet - Performance Series Ultra High
1	Chief	PAC501B	Large THINSTALL Dual Swing Arm Wall Display Mount
1	Chief	MWRIWUB	Medium Low-Profile In-Wall Swing Arm Mount - 22 Inch
1	Crestron	HD-TXU-4KZ-211-CHGR	DM® Essentials 4K60 4:4:4 Transmitter and 2x1 Auto-Switcher for HDMI®, USB-C® DisplayPort™, and USB 2.0 Signal Extension over CATx Cable with Device Charging
1	Crestron	HD-RXU-4KZ-101-E	DM® Essentials 4K60 4:4:4 Receiver for HDMI®, USB 2.0, and Ethernet Signal Extension over CATx Cable
1	HP Poly	A4MA7AA#ABA	Poly X72 AVB wTC10K US/CA
1	Misc	Cable-Misc Hardware	Cabling and Miscellaneous Parts
1	Lightware	13740032	Superspeed Type-A to USB Type-C cable 2m long USB3.1 Gen1 5Gbps
1	Lightware	13740032	Superspeed Type-A to USB Type-C cable 2m long USB3.1 Gen1 5Gbps
1	Middle Atlantic	PDX-215C-SP	15A 2 OUT SERIES SURGE COMPACT
1	Sony	FW85BZ35L	75" 3840x2160 4K 440nit,24/7 display
1	Windy City	IVCI-DISPLAY-MT-KIT	Display Mounting Kit

ORANGE & ROCKLAND UTILITIES, INC
SVOC NEW OFFICE ADDITION

Tax Map ID 56.52-1-2
390 West Route 59
Village of Spring Valley
Town of Ramapo
Rockland County, New York

SITEWORK
TECHNICAL SPECIFICATIONS

PREPARED BY

SNS ARCHITECTS & ENGINEERS, P.C.
One Paragon Drive, Suite 250, Montvale, NJ 07645 (201) 573-1767 FAX: (201) 573-0808

April 28, 2025 – Issued for Bidding and Building Department Filing

PROFESSIONAL ENGINEER

STEVEN NAPOLITANO, PE
NY License No. 077323

SECTION 31 05 00 - BASIC SITE MATERIALS AND METHODS

PART 1 - GENERAL

1.1 SUMMARY

A. Under this Section, provide all labor, tools, materials, and equipment necessary to furnish the following items of the Work in accordance with the Drawings:

1. Required aggregate materials.

2. Required soil materials.

B. Under this Section, the Soils Engineer, GZA GeoEnvironmental of New York or other Owner-designated soils engineer to be responsible for the required aggregate and required soil materials required in this Specification Section and throughout the Contract Documents.

C. Related Sections:

1. Section 31 10 00 – Site Preparation.

2. Section 31 25 00 – Erosion and Sedimentation Control.

3. Section 31 20 00 – Earthmoving:
   a. Grading.
   b. Excavation.
   c. Backfill.
   d. Trenching for Utilities.

4. Section 32 10 00 - Bases, Ballasts, pavements, and appurtenances.

5. Section 33 30 00 – Sanitary Sewerage: Site sanitary sewerage systems.

6. Section 33 42 00 – Storm Drainage.

7. Section 33 52 16 – Natural Gas Distribution.

1.2 REFERENCES

A. American Association of State Highway and Transportation Officials (AASHTO).

B. ASTM International:

1. Standard Classification of Soils for Engineering Purposes (Unified Soil Classification System) (ASTM D-2487-00).

C. New York State Department of Transportation: Latest edition of Construction and Material Specifications.

D. Soil and Water Conservation Society (SWCS).

E. Food and Agriculture Organization (FAO) of the United Nations (UN): World Reference Base for Soil Resources (FAO W-8594/E-2002).

1.3 SUBMITTALS

A. Samples: Submit a 50 pound sample of each material to be used to the ITL for approval and appropriate testing five days prior to the start of the earthwork. No material shall be placed until the ITL has approved the material for use on this Project.

1.4 PROJECT CONDITIONS

A. Existing Conditions: Prior to submitting their Bid, the Bidders shall visit the Site, inform themselves of the conditions, and make their own estimates of the facilities and difficulties attending the execution of the Work.

PART 2 – PRODUCTS

2.1 MATERIALS

A. Aggregate Materials:

1. General: All aggregate material, unless noted otherwise herein, shall be a clean material free of debris and organic matter.

2. Backfill Material:

a. Backfill material shall be bank run gravel or sand, or processed stone that meets the gradation criteria of ASTM D-2487 for well-graded gravels (GW) or sand (SW or SP). Maximum particle size shall pass a 2 inch sieve.
b. The material shall contain less that 15 percent fines passing the No. 200 sieve, and shall have a maximum plasticity index of 6.
c. Granular material found on the Site may be used for backfill material subject to the approval of the ITL.

B. Soil Materials:

1. All soils material, unless noted otherwise herein, shall be a clean material free of debris and organic matter and shall have a plasticity index of less than 20. Fill material shall be free of organic matter and clay balls with an upper particle size diameter of 2.5 inches.

2. Topsoil shall be the original top layer of a soil profile formed under natural conditions, technically defined as the "A" horizon by FAO W-8594/E. It shall consist of a natural friable loam, sandy loam, silt loam, or sandy clay loam. It shall be reasonably free of

refuse, noxious weeds, subsoil, stiff clay, hard lumps, stumps, roots, brush, stones or other litter or similar objects larger than 1-1/2 inches in diameter. It shall have demonstrated by evidence of healthy vegetation growing or having grown on it, prior to stripping, that it is reasonably well-drained and does not contain substances toxic to plant life. Topsoil found on the Site may be used provided it conforms to the requirements of this Section.

3. The moisture content of cohesive soil materials shall be no more than two percent less than or two percent greater than optimum moisture content for the soil being utilized during the entire time when the compactor is working on the fill. Drying, when required, shall be performed by continually working the soil with a disk harrow.

2.2 SOURCE QUALITY CONTROL

A. The Owner Reserves the right to make any inspections deemed necessary at the source of supply, and during preparation of any material used in this Work.

PART 3 – EXECUTION

3.1 PROTECTION

A. The Contractor shall be responsible for avoidance and cleanup of street spillage and tracking to the satisfaction of the Authorities Having Jurisdiction (e.g. AHJ).

END OF SECTION 31 05 00

SECTION 31 10 00 - SITE PREPARATION

PART 1 – GENERAL

1.1 SECTION INCLUDES

In general, the Contractor shall furnish and install all necessary materials, equipment and labor required to complete the requirements of site preparation as outlined in the Contract Specifications and the Contract Drawings.

1.2 RELATED DOCUMENTS

A. Drawings and general provisions of the Contract, including General and Supplementary Conditions and Division 1 Specification Sections, apply to this Section.

1.3 SUMMARY

A. Under this Section, provide all labor, tools, materials, and equipment required to perform the following items of the Work in accordance with the Drawings:

1. Clearing and grubbing.

2. Stripping of topsoil.

B. Related Sections:

1. Section 01 40 00 – Quality Rquirements

2. Section 02 05 00 – Basic Site Materials and Methods: Aggregate Materials.

3. Section 31 25 00 – Erosion and Sedimentation Control.

4. Section 31 20 00 – Earthmoving:
   a. Grading.
   b. Excavation.
   c. Backfilling of holes resulting from clearing of the Site.
   d. Trenching for utilities.

5. Section 32 10 00 – Bases, Ballasts, Pavements, and Appurtenances.

6. Section 32 92 19 – Seeding and Soil Supplements: Topsoil requirements.

1.4 REFERENCES

A. Associated General Contractors (e.g. AGC) of America: Manual of Accident Prevention for Construction, Eighth Edition, 1999.

B. National Pollutant Discharge Elimination System (NPDES): Storm Water Permit.

C. Occupational Safety and Health Administration (OSHA), United States Department of Labor (e.g. USDOL) Code of Federal Regulations (e.g. CFR):

1. General Industry Standards (OSHA 2206 or 29 CFR 1900 to 1910).

2. Construction Industry Standards (OSHA 2207 or 29 CFR 1926).

1.5 QUALITY ASSURANCE

A. Regulatory Requirements:

1. Clearing, grubbing, and stripping shall comply with local, state, and federal regulations regarding:
   a. Erosion and sedimentation control.
   b. Regulations and Requirements in the NPDES Storm Water Permit

2. Obtain and pay for all permits, tests, inspections, and the like, required by the Authority Having Jurisdiction (e.g.AHJ).

3. Execute and inspect the Work in accordance with all state and local codes, rules, ordinances, or regulations pertaining to the particular type of work involved.

   a. Should changes in the Drawings and/or Specifications be required to conform to such ordinances, notify the Owner at the time of submitting bid.

   b. After entering into the Contract, the Contractor shall be held responsible for the completion of all work necessary for a complete and approved installation – at no additional cost to the Owner.

   c. If required by the AHJ, prepare supplementary detailed diagrams or drawings, at no additional cost to the Owner.

1.6 PROJECT CONDITIONS

A. Existing Conditions: Prior to submitting their Bid, the Bidders shall visit the Site, inform themselves of the conditions, and make their own estimates of the facilities and difficulties attending the execution of the Work.

PART 2 – PRODUCTS

2.1 SOURCE QUALITY CONTROL

A. The Owner reserves the right to make inspections deemed necessary at the source of supply, and during preparation of material used in this Work.

PART 3 – EXECUTION

3.1 PERFORMANCE

A. Clearing and Grubbing: The Owner will exercise control over clearing and grubbing and – if not indicated on the Drawings – will designate all trees, shrubs, and plants to be removed.

1. Clear and completely remove the following from the limits of the Work:

a. Trees, roots, stumps, grass, weeds, and other vegetation.

b. Other surface objects and protruding obstructions.

2. Remove above items from the Site and dispose of in a safe, legal, and suitable manner.

B. Stripping of Topsoil: Strip all topsoil and organic superficial soils within the limits of the earthwork.

1. Topsoil required in the final work: Stockpile at the Site as directed by the Owner. Construct stockpiles in such a manner that they will be well drained and will not impound water or impede the natural drainage.

2. Other topsoil and organic superficial soils: Remove from the Site.

C. Dewatering: The Contractor shall be responsible for any and all dewatering that might be required to satisfactorily perform the Work indicated on the Drawings or specified herein.

1. Maintain surface drainage for the subgrade throughout the improvement area. Do not allow ponded water to collect on the subgrade to the extent that it is rendered unsuitable for further work.

2. If at the time that further work is performed, the subgrade is judged by the ITL or the Owner to be unsuitable due to poor drainage, then this Contractor shall remove such unsuitable material and replace it with acceptable material placed in accordance with this Section at no additional cost to the Owner.

D. Dust Control: The Contractor shall be responsible for dust control on and near the Site – and at waste areas away from the Site – if such dust is caused by the Contractor's operations or results from the condition in which the Contractor leaves the Site.

3.2 CLEANING

A. Upon completion of the Work, remove all surplus materials, debris, tools, and equipment from the Site.

END OF SECTION 31 10 00

SECTION 31 10 00 - SITE CLEARING

PART 1 - GENERAL

1.1 SECTION INCLUDES:

A. Removal of surface debris.

B. Removal of trees, shrubs and other plants.

C. Removal of sod.

D. Removal of paving and curbs.

1.2 RELATED SECTIONS

A. Section 31 22 00 – Grading: Topsoil Removal.

1.3 PROJECT CONDITIONS

A. Conform to applicable regulations relating to environmental requirements, disposal of debris, burning debris on site, and use of herbicides.

B. Coordinate clearing work with utility companies.

C. Protect utilities to remain from damage.

D. Protect trees, plants, and other features designated to remain as final landscaping.

E. Protect bench marks, survey control points, and existing structures from damage or displacement.

PART 2 - PRODUCTS

2.1 MATERIALS

A. Herbicide: Type approved by applicable regulatory agency**.**

PART 3- EXECUTION

3.1 PREPARATION

A. Locate and identify utilities to remain.

B. Tag existing plants designated to remain.

3.2 CLEARING

A. Clear areas required to access to site and execution of work.

B. Remove trees, shrubs, and stumps, indicated.

C. Remove roots to a depth of eighteen (18) inches below sub grade.

D. Clear undergrowth and deadwood without disturbing subsoil.

E. Apply herbicide to remaining stumps to inhibit growth.

F. Remove existing sod.

3.3 REMOVAL

A. Remove Surface rock.

B. Remove paving and curbs as indicated on drawings.

C. Remove debris from site.

END OF SECTION 31 10 00

SECTION 31 20 00 - EARTHMOVING

PART 1 – GENERAL

1.1 SECTION INCLUDES

In General, the Contractor shall furnish all labor, materials and equipment in order to complete the Work of this Specification Section, as indicated throughout the Technical Specifications and through the Special Consultants retained to prepare Geotechnical and Environmental Reports, as well as the Contract Drawings.

1.2 RELATED DOCUMENTS

A. Drawings and General Provisions of the Contract, Including General and Supplementary Conditions and Division 01 Specification sections, apply to this Section.

B. Division 1 – General Requirements: The Owner will provide and pay for continuous and periodic inspections and testing services, whichever is required by the specification, by a qualified Independent Testing Laboratory (ITL).

1.3 SUMMARY

A. Under this Section, provide all labor, tools, materials, and equipment required to complete the following items of the Work in accordance with the Drawings:

1. General Excavation and Grading of the Site.

2. Subgrade Preparation Including Proof-Rolling, Undercutting And Subgrade Replacement Where Required, And Subgrade Compaction.

3. Trenching for utilities.

4. Construction of fills.

5. Backfilling.

6. Compacting of backfill materials.

B. Related Sections:

1. Section 02 32 00 – Geotechnical Data.

2. Section 01 40 00 – Quality Requirements

3. Section 31 05 00 – Basic Site Materials and Methods:
   a. Aggregate Materials.
   b. Soil Materials.

4. Section 31 10 00 – Site Preparation.

5. Section 31 25 00 – Erosion and Sediment Control.

6. Section 31 11 00 -- Site Clearing.

7. Section 32 10 00 – Bases, Ballasts, Pavements, and Appurtenances: Removal of unsatisfactory sub-base, replacement with suitable fill, compaction, and testing.

8. Section 33 11 00 – Water Distribution.

9. Section 33 30 00 – Sanitary Sewerage.

10. Section 33 52 16 – Natural Gas Distribution.

11. Section 33 42 00 – Storm Drainage.

12. Section 32 92 19 – Seeding and Soil Supplements.

C. Measurement Procedures:

1. Notification of Owner:

a. Unless otherwise noted, material to be excavated is assumed to be earth and other materials that can be removed by a power shovel, bulldozer, scraper, or other excavating equipment, but not requiring the use of explosives, drills, or mucking equipment.

b. If unsuitable soils, as herein defined, are encountered within the limits of the excavation, the Contractor shall be responsible for the removal and disposal of the initial 1,000 cubic yards of same, and then contract price will be adjusted for the remaining amount of unsuitable soils in compliance with the changes in the work provisions of the General Conditions unless noted otherwise.

1) When unsuitable soils are encountered, notify the Owner immediately. Do not proceed further until instructions are given and measurements are made for purpose of establishing the volume of unsuitable soils and the value of excavating same.

2. Measurements:

a. The quantity of excavation of unsuitable soils will be the number of bank cubic yards removed by measurement of the excavation.

Note: The Owner may adjust grades or revise layout should excessive unsuitable materials be encountered.

1.4 REFERENCES

A. ASTM International: Compaction standards for required densities of fill compaction are expressed hereinafter in terms of percentages. Such terms shall mean percentages of maximum density at optimum moisture content, as determined and controlled by the following:

1. Standard Test Method for Density and Unit Weight of Soil in Place by the Sand-Cone Method (ASTM D-1556).

2. Standard Test Methods for Laboratory Compaction Characteristics of Soil Using Standard Effort (12,400 ft-lbf/ft^3 (600 kN-m/m^3)) (ASTM D-698ae1): Moisture-density relationship of soils, Standard Proctor Method.

3. Standard Test Method for Density and Unit Weight of Soil in Place by the Rubber Balloon Method (ASTM D-2167).

4. Standard Classification of Soils for Engineering Purposes (Unified Soil Classification System) (ASTM D-2487).

5. Standard Test Methods for Density of Soil and Soil-Aggregate in Place by Nuclear Methods (Shallow Depth) (ASTM D-2922).

6. Standard Test Method for Density of Soil in Place by the Drive-Cylinder Method (ASTM D-2937-e1).

7. Standard Test Methods for Maximum Index Density and Unit Weight of Soils Using a Vibratory Table (ASTM D-4253).

8. Standard Test Methods for Minimum Index Density and Unit Weight of Soils and Calculation of Relative Density (ASTM D-4254).

B. 2020 Building Code of New York State.

C. National Pollutant Discharge Elimination System (NPDES): Storm Water Permit.

D. Occupational Safety and Health Administration (OSHA), United States Department of Labor (USDOL) Code of Federal Regulations (CFR): Construction Industry Standards (OSHA 2207 or 29 CFR 1926).

E. New York State Department of Transportation: Latest edition of Construction and Material Specifications (DOT CMS).

1.5 DEFINITIONS

A. Excavation: The removal of soils, rock, or other materials as required to construct improvements as indicated on the Drawings and/or specified herein.

B. Grading: The excavation and use of – or satisfactory disposal of – all materials excavated within the limits of the Work.

C. Filling: The prescribed placing and compaction of soil or aggregate materials beneath proposed improvements to raise the grade to the required level.

D. Backfilling: The prescribed placing and compaction of soils or aggregate materials in areas of foundations, utility trenches, or their component parts as indicated on the Drawings and specified herein.

E. Engineered Fill: Selected fill or backfill materials systematically placed and uniformly compacted in accordance within this Section.

Note: Periodic and representative sampling, density testing, and other compliance checks will be provided by the ITL to verify compliance.

F. Benching: The excavation of material in the existing ground beneath proposed embankments, as indicated on the Drawing or described herein, in order to increase the bond between the existing ground and proposed embankment.

G. Unsuitable Soil(s): Highly organic soils (peat/muck), organic and inorganic clays of high plasticity with a liquid limit greater than 50, and organic silts with a liquid limit greater than 50.

1.6 SUBMITTALS

A. Samples: Submit 50 pound samples of each material proposed to be used during the Work of this Section to the ITL for approval and appropriate testing five days prior to the start of the earthwork. No material shall be placed until the ITL has approved the material for use on this project.

1.7 QUALITY ASSURANCE

A. Regulatory Requirements:

1. Earthwork shall comply with local, state, and federal regulations regarding:

a. Erosion and sedimentation control.
b. Regulations and requirements in the NPDES Storm Water Permit.

2. Obtain and pay for all permits, tests, inspections, and the like, required by the authorities having jurisdiction (e.g. AHJ).

3. Execute and inspect the Work in accordance with all state and local codes, rules, ordinances, or regulations pertaining to the particular type of work involved.

a. Should any changes in the Drawings and/or Specifications be required to conform to such ordinances, notify the Owner at the time of submitting bid.

b. After entering into the Contract, the Contractor shall be held responsible for the completion of all work necessary for a complete and approved installation without additional cost to the Owner.

c. If required by the AHJ, prepare supplementary detailed diagrams or drawings, at no additional cost to the Owner.

1.8 DELIVERY, STORAGE, AND HANDLING

A. All approved backfill material delivered to the site for stockpiling shall be piled to ensure proper drainage. Take measures necessary to prevent erosion.

B. Stockpiling and handling methods shall not promote segregation of the material.

C. Locations of stockpiles shall be acceptable to the owner.

1.9 PROJECT CONDITIONS

A. Existing conditions: prior to submitting their bid, the bidders shall visit the site, inform themselves of the conditions, and make their own estimates of the facilities and difficulties attending the execution of the work.

B. Environmental requirements:

1. No backfill or fill material shall be placed, spread, or compacted while the ground or fill is frozen or thawing, or during unfavorable weather conditions.

2. Do not install utilities when weather is unsuitable for such work.

3. When work is interrupted by heavy rain or frost, operations shall not be resumed unless the moisture content and density of the fill are as previously specified.

1.10 SEQUENCING AND SCHEDULING

A. Complete general site grading before starting work on the building foundations.

B. In order to eliminate soil and sediment runoff, coordinate all grading work with the work of the other Trades. Phase grading work in a manner that prevents prolonged periods of open, bare earth without a suitable vegetation cover.

PART 2 – PRODUCTS

2.1 MATERIALS

A. Backfill for Trenches:

1. Free from debris, roots, wood, or other organic material, and stones larger than 4 inches in their largest dimension.

2. Approved by ITL.

3. If additional backfill material is required, it may be obtained from approved borrow on the Site (at no additional cost to Owner).

B. Backfills and Granular Base beneath Floor Slabs:

1. Backfill material shall be bank run gravel or sand, or processed stone meeting the gradation criteria of ASTM D-2487 for well-graded gravels (GW) or sand (SW or SP). Maximum particle size shall pass a 2 inch sieve.

2. The material shall contain less than 15 percent fines passing the No. 200 sieve, and shall have a maximum plasticity index of six.

3. Granular material found on the Site may be used for backfill material subject to the approval of the ITL.

4. Select the equipment for backfilling the various materials in conformance with the requirements of this Section. However, promptly replace any equipment that results in waste of material, or results in inaccurate work, or is otherwise objectionable, as directed by the Owner at no additional cost to the Owner.

C. Other fills shall be constructed from cohesive or granular materials found on or off the Site and approved by the ITL.

1. Unless noted otherwise herein, all such material shall be a clean fill material, free of debris and organic matter, and shall have a plasticity index of less than 20. Material shall be free of rock fragments or stones larger than 4 inches in their largest dimension.

2.2 SOURCE QUALITY CONTROL

A. The Owner Reserves the right to make any inspections deemed necessary at the source of supply, and during preparation of any material used in this Work.

PART 3 – EXECUTION

3.1 GENERAL

A. The Grading operations shall be performed in accordance with the recommendations in Section 02 32 00 – Geotechnical Data.

3.2 PREPARATION

A. Protection:

1. Bench Marks and Monuments: Maintain carefully the integrity of all benchmarks, monuments, and other reference points. If disturbed or destroyed, replace as directed. If found at variance with the Drawings, notify Owner before proceeding to lay out the Work.

2. Protection of Existing Work Remaining:

   a. All existing structures, curbs, and pavements damaged in performance of this Work shall be restored at no additional cost to the Owner.

   b. Existing utility services shall not be interrupted.

      1) Exception: When authorized in writing by the Owner, and only after temporary services have been installed by the Contractor and approved by the Owner and the applicable utility company.

3. All earthwork shall be adequately sloped or shored and braced to protect the property of the Owner and the safety of the workers. All such protections shall satisfy the requirements of OSHA 2207 and all other applicable codes and ordinances.

4. The Contractor shall be responsible for avoidance and cleanup of street spillage and tracking to the satisfaction of the AHJ.

B. Surface Preparation:

1. Following removal of topsoil, all areas requiring fills and pavement subgrades in cut areas shall be proof-rolled with a fully loaded tandem-wheeled dump truck and observed by a representative of the ITL. Soft or yielding soils shall be scarified and/or undercut and/or surcharged and filled with an approved fill material as directed by the representative of the ITL. Complete all required subgrade reworking or replacement in accordance with this Section.

2. Following proof-rolling and subgrade replacement, in areas where cut is required to bring the site to grade, compact the upper 12 inches with a compactor approved by the ITL to a minimum of 95 percent of optimum density as determined by ASTM D-698 (Standard Proctor) where floors will be constructed. In cut areas where pavements will be constructed, the top 6 inches shall be compacted to a minimum of 100 percent of optimum density as determined by ASTM D-698 (Standard Proctor).

3. In areas where fill is required to bring the site to grade, remove all organic matter, foreign material, old pavement, topsoil, and debris subject to termite attack, rot, or corrosion. Compact the top 6 inches of cleared subgrade to a minimum of 95 percent of optimum density as determined by ASTM D-698 (Standard Proctor) for fine-grained soils. If the subgrade is granular material, compact the top 6 inches to a minimum of 70 percent of relative density as determined by the relative density test ASTM D-4253 and D-4254.

4. Before placing fill or backfill, remove all debris subject to termite attack, rot, or corrosion – and all other deleterious materials – from areas to be filled or backfilled.

3.3 INSTALLATION

A. General:

1. Grade the Site to the elevations indicated on the Drawings. Hold down the rough grades as required to receive the surfacing indicated on the Drawings or specified herein.

   a. In all areas not indicated to receive paving, hold rough grades down 6 inches to allow for topsoil.

2. Maintain surface drainage for the subgrade throughout the improvement area. No ponded water shall be allowed to collect on the subgrade to the extent that it is rendered unsuitable for further work. If at the time of performing further work the subgrade is judged by the ITL or the Owner to be unsuitable due to poor drainage, remove such unsuitable material and replace it with acceptable material placed in accordance with this Section at no additional cost to the Owner.

3. Angle of all banks shall not exceed a slope of 1 foot vertical to 3 feet horizontal.

   a. Exception: Where indicated otherwise on the Drawings.

4. Surplus Excavated Materials: Remove as required by the Contract Documents or as directed by the Owner.

5. Unsuitable Materials: Remove and dispose of as required by the Contract Documents or as directed by the Owner.

B. Trenching:

1. General:

   a. Perform trenching as indicated on the Drawings and as specified herein.

   b. Excavate trenches and openings for structures in open cut, from the surface, to required depth, and accurately to required grade. Excavate trenches no wider than necessary to work efficiently and to comply with safety regulations.

   c. Notify ITL when excavations have reached prescribed depths. No utilities shall be laid, forms constructed, and the like, until excavations have been inspected by ITL, and/or the AHJ requiring such, and have been specifically approved.

   d. To prevent damage to the Work or delay in construction:

      1) All excavations shall be maintained in good order.

      2) All precautions shall be taken to prevent movement of sides.

e. Trench excavations shall be properly shored, benched, sloped, braced, and sheathed as conditions may require. Include costs of same in lump sum base bid.

f. Pile excavated material (suitable for backfill or fill) in an orderly manner and at a sufficient distance back from edge of trench or opening to avoid slides or cave-ins. Protect against erosion.

2. Excavation for Utility Trenches:

a. Mechanical and/or hand excavation of trenches shall be stopped a minimum 6 inches below outside bottom of pipe/conduit grade elevation so that each section of pipe/conduit will rest on granular bedding for its full length.

b. When trench is over-excavated, trench shall be brought to required elevation and shaped with approved granular material as specified herein.

c. When material at the bottom of the trench is soft, it shall be removed to such depth as the ITL or the Owner may require, and shall be backfilled with approved granular material and compacted at no additional cost to the Owner.

d. Where material at the bottom of the trench is unsuitable, as defined herein:

1) It shall be removed.

2) A measurement of unsuitable excavation shall be taken.

3) It shall be backfilled with approved granular material and compacted.

e. Where utility is laid in filled areas, place earth fill before any pipe/conduit is placed. Fill to a depth of not less than 2 feet above top of pipe/conduit and compact as required. Trench shall then be excavated to required grade as specified.

f. Excavate only that amount of trench into which the utility can be installed and backfilled in one day. Under no circumstances shall more than 400 linear feet of trench be opened at one time.

3. Backfilling of Utility Trenches:

a. Backfill trenches and excavations immediately after utility is laid and inspected, and locations have been recorded. Under no circumstances shall water be permitted to rise in un-backfilled trenches and excavations after utility or structures have been placed.

b. Backfill trenches to a height of 1 foot above top of utility (or greater if specified) with approved granular material.

1) Backfill around utility shall be placed in layers not exceeding 8 inches in depth, with the first lift not extending higher than haunch line of pipe, with each layer carefully and thoroughly tamped to a minimum density of 95 percent of maximum dry density per ASTM D-687 (Standard Proctor).

2) Place backfill simultaneously on both sides of utility to prevent displacement.

3) Do not bring utilities up to grade by ramming material along their sides.

4) Contractor's Option: Backfill trenches completely with approved granular material (and at no additional cost to Owner).

c. If excavated areas require shoring and/or sheeting, remove sheeting ahead of backfilling operations in a manner that will not endanger the completed Work.

1) If in the opinion of the Architect/Engineer or the Owner, removal might damage installed utility – or at Contractor's option – they shall be left in place (at no additional cost to the Owner). Cut off any such sheeting at least 2 feet below proposed surface grade and remove cutoff material from trench. Then record the location and top elevation of sheeting left in place.

d. Puddling or water flooding for consolidation of backfill will be grounds for rejection of the installation.

C. Fill:

1. Spread fill material in uniform layers having a maximum thickness, measured loose, of 8 inches and a maximum thickness of 6 inches in the compacted state. Each layer shall be thoroughly bladed and mixed during the spreading to ensure uniformity of material in each layer.

2. After each layer has been placed and spread evenly, it shall be mechanically compacted to a minimum density of 95 percent of maximum dry density per ASTM D-698 (Standard Proctor) for fine-grained soils. If granular fill is used, compact each lift to a minimum of 70 percent of relative density as determined by ASTM D-4253 and D-4254, latest revisions.

3. Make sufficient passes of the approved compactor in order to obtain the specified densities. A minimum of three passes of the compactor shall be required over all portions of each lift. A "pass" shall be defined as one

passage of the contact portion of the compactor over the entire surface of the layer.

4. The moisture content of the granular fill materials shall be within two percent of the optimum moisture content for the soils being utilized during the entire time when the compactor is working on the fill. If in the opinion of the representative of the ITL, the fill is too dry for proper compaction, spray the fill with a sufficient quantity of clean water to bring the fill layer to the proper moisture content.

5. The moisture content of cohesive fill materials shall be no more than two percent less than or two percent greater than optimum moisture content for the soil being utilized during the entire time when the compactor is working on the fill. Drying, when required, shall be performed by continually working the soil with a disk or harrow.

6. Undercutting and replacement of material, if required by the ITL and approved by the Owner, shall be performed in accordance with 3.03.D. The compaction of the subgrade shall be stopped if pumping begins.

7. If pumping begins, compaction shall be stopped immediately and resumed only when the material is sufficiently dry, as determined by the ITL.

8. In order to minimize infiltration and absorption of rainwater, the fill surface must be made smooth and free from ruts or indentations:

   a. At the end of any working day when significant precipitation is forecast.

   b. Upon completion of the compaction operations in that area.

D. Site Tolerances:

1. Perform earthwork operations to establish required elevations and dimensions within the following tolerances at points taken on a grid of the specified dimensions. Results that rely on average values will be grounds for rejection of the installation.

   a. Exception: No tolerance will be permitted that would allow:

      1) A lesser size than indicated for footings and foundations.
      2) A lesser thickness than indicated for:

         a) Paving
         b) Paving base course.
         c) Concrete floor slabs-on-grade.

2. Under Buildings Areas: Plus 0 inch or minus 1/2 inch at points taken on a 30-foot grid.

3. Under Paving Areas: Plus 0 inch or minus 1/2 inch at points taken on a 200-foot grid.

4. Other Areas: Plus 0 inch or minus 1 inch at points taken on a 200-foot grid.

E. Dewatering: The Contractor shall be responsible for any and all dewatering that might be required to satisfactorily construct all of the Work indicated on the Drawings or specified herein.

1. Maintain surface drainage for the subgrade throughout the improvement area. No ponded water shall be allowed to collect on the subgrade to where it is rendered unsuitable for further work. If at that time of performing further work the subgrade is judged by the ITL or the Owner to be unsuitable due to poor drainage, remove such unsuitable material and replace it with acceptable material placed in accordance with this Section at no additional cost to the Owner.

2. Contractor shall (at all times) take such precautions as are necessary to keep the trenching work free from ground and/or surface water:

a. Provide pump(s) of adequate capacity to remove water that might enter excavations.

b. Remove water in such a manner that it will not interfere with the progress of the Work.

c. Do not install utilities when condition of trench is unsuitable for such work.

F. Dust Control: The Contractor shall be responsible for dust control on and near

G. The Site – and at all borrow areas away from the Site – if such dust is caused by the Contractor's operations or results from the condition in which the Contractor leaves the Site. Use all means necessary to thoroughly moisten all surfaces as required to prevent dust being a nuisance to the Owner, neighbors, the Public, and concurrent performance of other Work at the Site.

3.4 FIELD QUALITY CONTROL

A. Notify the ITL and the Owner, in writing, five days prior to the start of the earthwork. The notice shall state:

1. Source of fill material to be used.
2. Equipment to be used.
3. Date and time that earthwork operations will start.
4. Name of the person who will be in charge of the operations in the field.

B. If work is interrupted, the Contractor shall notify the ITL 24 hours prior to the resumption of the Work.

C. All earthwork shall be subject to the continuing inspection and acceptance of the ITL and the Owner. It will be the ITL's decision, in conjunction with the Owner, as to the acceptability of any materials or work containing those materials.

1. The representative of the ITL shall make field density tests to determine the actual density attained in each layer of backfill or fill.

2. Field density test procedures shall conform to one of the following:

a. ASTM D-1556 (Sand-Cone Method).
b. ASTM D-2167 (Rubber Balloon Method).
c. ASTM D-2922 (Nuclear Density Method).
d. ASTM D-2937 (Drive Cylinder Method).

3. Should these tests indicate that the density of any layer of backfill or fill (or portion thereof) is below the required density, the particular layer (or portion thereof) shall be replaced – or reworked until the required density has been obtained – and then re-compacted and re-tested at no additional cost to the Owner.

4. No backfill or fill shall be placed over a layer that has not been tested and approved.

D. If, in the opinion of the ITL, substandard conditions are encountered (such as questionable soil, poor moisture content, inadequate compaction, adverse weather, and the like) the ITL will require that it be corrected at no additional cost to the Owner.

E. Prior to the placement of concrete, the ITL shall inspect footing excavations to check for any “soft” zones or areas of high plasticity clay. Soft Zones should be removed and replaced at no additional cost to the owner.

3.5 CLEANING

A. Upon completion of the Work, remove all surplus materials, debris, tools, and equipment from the Site.

END OF SECTION 31 20 00

SECTION 31 22 00 - GRADING

PART 1 - GENERAL

1.1 SECTION INCLUDES:

A. Removal and storage of topsoil.

B. Rough grading the site for site structures, building pads, pavements and detention facilities.

C. Replacement of topsoil and finish grading.

1.2 RELATED SECTIONS

A. Section 31 11 00 – Site Clearing.

B. Section 31 23 00 – Excavation.

C. Section 31 23 23 – Fill and Backfill: Filling and Compaction.

1.3 SUBMITTALS

A. Project Record Documents: accurately record actual locations of utilities remaining by horizontal dimensions, elevations or inverts, and slope gradients.

1.4 QUALITY ASSURANCE

A. Perform Work in accordance with State Highway Department Standards.

1.5 PROJECT CONDITIONS

A. Protect above and below grade utilities that remain.

B. Protect plants, lawns, rock outcroppings, and other features to remain as a portion of final landscaping.

C. Protect bench marks, survey control points, existing structures, fences, sidewalks, paving, and curbs from grading equipment and vehicular traffic.

PART 2 - PRODUCTS

2.1 MATERIALS

A. Topsoil: Topsoil excavated on-site.
1. Graded.
2. Free of roots, rocks larger than ½ inch, subsoil, debris, large weeds and foreign matter.

B. Other Fill Materials. See Section 31 23 23.

PART 3 - EXECUTION

3.1 EXAMINATION

A. Verify that survey bench mark and intended elevations for the work are as indicated on contract documents.

3.2 PREPARATION

A. Identify required lines, levels, contours, and datum.

B. Stake and flag locations of known utilities.

C. Locate, identify and protect utilities that remain from damage.

D. Notify utility company to remove and relocate utilities.

3.3 ROUGH GRADING

A. Remove topsoil from areas to be further excavated, re-landscaped, or re-graded.

B. Do not remove topsoil when wet.

C. Remove subsoil from areas to be further excavated, re-landscaped, or re-graded.

D. Do not remove wet subsoil, unless it is subsequently processed to obtain optimum moisture content.

E. When excavating through roots, perform work by hand and cut roots with sharp axe.

F. See section 02316 for filling procedures.

G. Benching slopes: horizontally bench existing slopes greater than 1:4 to key fill material to slop for firm bearing.

H. Stability: replace damaged or displaced subsoil to same requirements as for specified fill.

3.4 SOIL REMOVAL AND STOCKPILING

A. Stockpile topsoil to be re-used on site; remove remainder from site.

B. Stockpiles: use areas designated on site; pile depth not to exceed 8 feet; protect from erosion.

3.5 FINISH GRADING

A. Before Finish Grading:
   1. Verify building and trench backfilling have been inspected.
   2. Verify subgrade has been contoured and compacted.

B. Remove debris, roots, branches, stones, in excess of ½ inch in size. Remove soil contaminated with petroleum products.

C. Where topsoil is to be placed, scarify surface to depth of three (3) inches.

D. In areas where vehicles or equipment have compacted soil, scarify surface to depth of six (6) inches.

E. Place topsoil in areas where seeding, sodding and planting are indicated.

F. Place topsoil where required to level finish grade.

G. Place topsoil to the following compacted thicknesses:
   1. Areas to be Seeded with Grass: six (6) inches.
   2. Areas to be Sodded: four (4) inches.
   3. Shrub Beds: eighteen (18) inches.
   4. Flower Beds: twelve (12) inches.
   5. Planter Boxes: To within three (3) inches of box rim.

H. Place topsoil during dry weather.

I. Remove roots, weeds, rocks, and foreign material while spreading.

J. Near plants, buildings, and trees spread topsoil manually to prevent damage.

K. Fine grade topsoil to eliminate uneven areas and low spots. Maintain profiles and contour of subgrade.

L. Roll placed topsoil.

3.5 TOLERANCES

A. Top Surface of Subgrade: Plus-Or-Minus One-Tenth (1/10th) Foot from Required Elevation.

B. Top Surface of Finish: Grade: Plus-Or-Minus One-Half (1/2) Inch.

3.6 FIELD QUALITY CONTROL

A. See Section 31 23 23 For Compaction Density Testing.

3.7 CLEANING AND PROTECTION

A. Remove unused stockpiled topsoil and subsoil. Grade stockpile area to prevent standing water.

B. Leave site clean and raked, ready to receive landscaping.

END OF SECTION 31 22 00

SECTION 31 23 00 - EXCAVATION

PART 1 - GENERAL

1.1 SECTION INCLUDES:

A. Excavating for building volume below grade, footings, slabs-on-grade, paving, site, structures, utilities within the building, and detention facilities.

B. Trenching for utilities outside of building to utility main connections.

1.2 RELATED SECTIONS

A. Section 02 32 00 – Geotechnical Report.

B. Section 01 73 00 – Execution.

C. Section 31 22 00 – Grading: Soil Removal from Surface of Site.

D. Section 31 23 23 – Fill and Backfill: Fill Materials, Filling and Compacting.

E. Section 33 46 00 – Subdrainage. Filter Aggregate and Filter Fabric for Foundation Drainage Systems.

1.3 PROJECT CONDITIONS

A. Verify that survey bench mark and intended elevations for the Work are as indicated.

B. Protect plants, lawns, rock outcroppings, and other features to remain.

C. Protect bench marks, survey control points, existing structures, fences, sidewalks, paving curbs, and detention facilities from excavating equipment and vehicular traffic.

PART 2 - PRODUCTS – NOT USED

PART 3 - EXECUTION

3.1 PREPARATION

A. Identify required lines, levels, contours, and datum locations.

B. See Section 31 10 00 for additional requirements.

3.2 EXCAVATING

A. Underpin adjacent structures which may be damaged by excavating work.

B. Excavate to accommodate new structures, construction operations, and detention facilities.

C. Notify Architect/Engineer SNS Architects – Engineers PC of unexpected subsurface conditions and discontinue affected Work in area until notified to resume work.

D. Slope banks of excavations deeper than 4 feet to angle of repose or less until shored.

E. Do not interfere with 45 degree bearing splay of foundations.

F. Cut utility trenches wide enough to allow inspection of installed utilities.

G. Hand trim excavations. Remove loose matter.

H. Correct areas that are over-excavated and load-bearing surfaces that are disturbed; see Section 31 23 23.

I. Grade top perimeter of excavation to prevent surface water from draining into excavation.

J. Remove excavated material that is unsuitable for re-use from site.

K. Stockpile excavated material to be re-used in area designated on site in accordance with Section 31 22 00.

L. Remove excess excavated material from site.

3.3 FIELD QUALITY CONTROL

A. See Section 01 40 00 – Quality Requirements, for general requirements for field inspection and testing.

B. Provide for visual inspection of load-bearing excavated surfaces before placement of foundations.

3.4 PROTECTION

A. Prevent displacement of banks and keep loose soil from falling into excavation; maintain soil stability.

B. Protect bottom of excavation and soil adjacent to and beneath foundation from freezing.

END OF SECTION 31 23 00

SECTION 31 23 23 - FILL AND BACKFILL

PART 1 - GENERAL

1.1 SECTION INCLUDES

A. Filling, backfilling and compacting for building volume below-grade, footings, slabs-on-grade, paving, site structures, and utilities within the building.

B. Backfilling and compacting for utilities outside the building to utility main connections.

1.2 RELATED SECTIONS

A. Section 31 22 00 – Grading: Soil Removal from Surface of Site.

B. Section 31 23 00 – Excavation

C. Section 33 46 00 - Subdrainage. Filter Aggregate and Filter Fabric for Foundation Drainage Systems.

D. Section 03 30 00 – Cast-In-Place Concrete.

E. Section 07 11 13 - Bituminous Dampproofing

1.3 REFERENCES

A. ASTM D 1556 – Standard Test Method for Density and Unit Weight of Soil in Place by the Sand-Cone Method.
B. ASTM D 1557 – Standard Test Methods for Laboratory Compaction Characteristics of Soil Using Modified Effort (56,000 ft-lb/ft.3 (2,700 kN m/m3).
C. ASTM D 2487 – Standard Practice for Classification of Soils for Engineering Purposes. (Unified Soil Classification System).

1.4 DEFINITIONS

A. Finish Grade Elevations: Indicated on drawings.

1.5 SUBMITTALS

A. See Section 01 33 00 – Administrative Requirements, for submittal procedures.

B. Materials Sources: Submit name of imported materials source.

C. Fill Composition. Test Reports: Results of Laboratory tests on actual materials used.

D. Compaction Density Test Reports.

1.6 PROJECT CONDITIONS

A. Provide sufficient quantities of fill to meet project schedule and requirements. When necessary, store materials on site in advance of need.

B. When fill materials need to be sorted on site, locate stockpiles where indicated.
   1. Separate differing materials with dividers or stockpile separately to prevent intermixing.
   2. Prevent contamination.
   3. Protect stockpiles from erosion and deterioration of materials.

C. Verify that survey bench marks and intended elevations for the Work are as indicated.

PART 2 - PRODUCTS

2.1 FILL MATERIALS

A. General Fill: Subsoil excavated on-site and/or imported borrow conforming to State Highway Department standard.
   1. Graded.
   2. Free of lumps larger than three (3) inches, rocks larger than two (2) inches, and debris.
   3. Conforming to ASTM D 2478 Group 5 Symbol CL.

2.2 SOURCE QUALITY CONTROL

A. See Section 01 40 00 – Quality Requirements for general requirements for testing and analysis of soil material.

B. Where fill materials are specified by reference to a specific standard, test and analyze samples for compliance before delivery to site.

C. If tests indicate materials do not meet specified requirements, change material and retest.

D. Provide materials of each type from same source through the Work.

PART 3 - EXECUTION

3.1 EXAMINATION

A. Identify required lines, levels, contours, and datum locations.

B. See Section 31 22 00 for additional requirements.

C. Verify sub drainage, damp proofing, or waterproofing installation has been inspected.

D. Verify structural ability of unsupported walls to support imposed loads by the fill.

E. Verify underground tanks are anchored to their own foundations to avoid flotation after backfilling.

3.2 PREPARATION

A. Scarify and proof roll subgrade surface to a depth of six (6) inches to identify soft spots.

B. Cut out soft areas of subgrade not capable of compaction in place. Backfill with general fill.

C. Compact subgrade to density equal to or greater than requirements for subsequent fill material.

D. Until ready to fill, maintain excavations and prevent loose soil from falling into excavation.

3.3 FILLING

A. Fill to contours and elevations indicated using unfrozen materials.

B. Fill up to subgrade elevations unless otherwise indicated.

C. Employ a placement method that does not disturb or damage other work.

D. Systematically fill to allow maximum time for natural settlement. Do not fill over porous, wet, frozen or spongy subgrade surfaces.

E. Maintain optimum moisture content of fill materials to attain required compaction density.

F. Granular Fill: Place and compact materials in equal continuous layers not exceeding eight (8) inches compacted depth.

G. Soil Fill: Place and compact material in equal continuous layers not exceeding twelve (12) inches compacted depth.

H. Slope grade away from building minimum two (2) inches in ten (10) feet, unless noted otherwise. Make gradual grade changes. Blend slope into level areas.

I. Correct areas that are over-excavated.
   1. Load-bearing foundation surfaces: Fill with concrete.
   2. Other areas: Use general fill, flush to required elevation, compacted to minimum 95% of maximum dry density.

J. Compaction Density Unless Otherwise Specified or Indicated:
   1. Under paving, slabs-on-grade, and similar construction: Ninety-Five percent (95%) of maximum dry density.
   2. At other locations: Ninety (90%) percent of maximum dry density.

K. Reshape and re-compact fills subjected to vehicular traffic.

3.4 FILL AT SPECIFIC LOCATIONS

A. Use general fill unless otherwise specified or indicated.

B. Over foundation drains as shown on the plans.
   1. Drainage fill and geotextile fabric. Section 02620.
   2. Cover drainage fill with granular fill.
   3. Fill up to subgrade elevation.
   4. Compact to ninety percent (90%) of maximum dry density.

C. Over Buried Utility Piping, Conduits, and Duct Bank in Trenches.
   1. Use general fill.
   2. Fill up to six (6) inches below finish grade elevations.
   3. Compact to ninety percent (90%) of maximum dry density.
   4. See Section 31 22 00 for topsoil placement.

D. At Lawn Areas:
   1. Use general fill.
   2. Fill up to six (6) inches below finish grade elevations.
   3. Compact to ninety percent (90%) of maximum dry density.
   4. See Section 31 22 00 for topsoil placement.

E. At Planting Areas Other Than Lawns:
   1. Use general fill.
   2. Fill up to six inches (6”) below finish grade elevations.
   3. Compact to ninety percent (90%) of maximum dry density.
   4. See Section 31 22 00 for topsoil placement.

F. At French Drains and Well points:
   1. Use granular fill.
   2. Fill up to eight inches (8”) below finish grade.
   3. Compact to ninety-five percent (95%) of maximum dry density.

3.5 TOLERANCES

A. Top Surfaces of General Filling: Plus or minus one inch (1”) from required elevations.

B. Top Surface of Filling Under Paved Areas: Plus or minus one inch (1”) from required elevations.

3.6 FIELD QUALITY CONTROL

A. See Section 01 40 00 – Quality Requirements for general requirements for field inspection and testing.

B. Perform compaction density on compacted fill in accordance with ASTM D1556.

C. Evaluate results in relation to compaction curve determined by testing non- compacted material in accordance with ASTM D 1557 (“Modified Proctor”).

D. If tests indicate work does not meet specified requirements, remove work, replace and retest.

E. Frequency of Tests. Per Soils Engineer’s direction.

F. Proof roll compacted fill at surfaces that will be under slabs-on-grade, pavers and paving.

3.7 CLEAN-UP

A. Remove unused stockpiled materials; leave area in a clean and neat condition. Then, grade stockpile area to prevent standing surface water.

END OF SECTION 031 23 23

SECTION 31 25 00 - EROSION AND SEDIMENTATION CONTROL

PART 1 – GENERAL

1.1. SCOPE OF WORK

In general, the Contractor shall furnish all materials and equipment necessary to prevent erosion and sedimentation control prior to the commencement of construction work, as well as during construction work and post-construction Work.

1.2 RELATED DOCUMENTS

A. Drawings and general provisions of the Contract, including General and Supplementary Conditions and Division 1 Specification Sections, apply to this Section.

1.3 SUMMARY

A. Under this Section, provide all labor, tools, materials, and equipment required to perform erosion and sedimentation control in accordance with the Drawings.

1.4 RELATED SECTIONS

A. Division 1 – General Requirements: The Owner will provide and pay for continuous and periodic inspections and testing services, whichever is required by the specification, by a qualified Independent [Engineering] Testing Laboratory (ITL).

B. Section 02 05 00 – Basic Site Materials And Methods.

C. Section 31 10 00 – Site Preparation.

D. Section 31 11 00 – Site Clearing

E. Section 31 20 00 – Earthmoving:

1. Grading: In order to eliminate soil and sediment runoff, coordinate all grading work with the work of the other Trades. Phase grading work in a manner that prevents prolonged periods of open, bare earth without a suitable vegetation cover.

2. Excavation.

3. Backfilling of holes resulting from clearing of the Site.

4. Trenching for utilities.

F. Section 33 11 00 – Water Distribution.

G. Section 33 30 00 – Sanitary Sewerage.

H. Section 33 42 00 – Storm Drainage.

I. Section 32 92 19 – Seeding and Soil Supplements:

1. Seed and Fertilizer: To prevent soil erosion and rapid runoff during the construction period, provide temporary grass seed covers on all stacked topsoil piles, and other areas of stockpiled excavated material. Prolonged periods of open, bare earth without grass cover will not be permitted.

2. Guarantee the control of erosion for one year following acceptance the Project by the Owner. Should erosion occur, restore the areas at no additional cost to the Owner.

1.5 REFERENCES

A. American Association of State Highway and Transportation Officials'(AASHTO): Geotextile Specifications for Highway Applications (AASHTO M-288-00).

B. National Pollutant Discharge Elimination System (NPDES): Storm Water Permit.

1.6 SUBMITTALS

A. Submit Product Data and Shop Drawings for approval in accordance with the General Requirements. No work shall commence until submittals have been approved.

1.7 QUALITY ASSURANCE

A. Regulatory Requirements:

1. Accomplish all sedimentation and erosion control work in accordance with the Drawings and the requirements of this Section.

a. Accomplish in strict accordance with:

1) The approved "Erosion and Sedimentation Control Plan."

2) Local, state, and federal regulations and requirements regarding erosion and sedimentation.

3) The regulations and requirements in the NPDES Storm Water Permit.

b. Closely adhere to all directives issued by the local, state, and federal jurisdictions during the entire construction program – providing the directives fall within the general scope of work of the Drawings and this Section.

2. Obtain and pay for all permits, tests, inspections, and the like, required by the authorities having jurisdiction.

3. Execute and inspect the Work in accordance with all local and state codes, rules, ordinances, or regulations pertaining to the particular type of work involved.

a. Should any changes in the Drawings and/or Specifications be required to conform to such ordinances, notify the Owner at the time of submitting bid.

b. After entering into the Contract, the Contractor shall be held responsible for the completion of all work necessary for a complete and approved installation without additional cost to the Owner.

c. If required by the authorities having jurisdiction, prepare supplementary detailed diagrams or drawings, at no additional cost to the Owner.

1.8 PROJECT CONDITIONS

A. Existing Conditions: Prior to submitting their Bid, the Bidders shall visit the Site, inform themselves of the conditions, and make their own estimates of the facilities and difficulties attending the execution of the Work.

PART 2 – PRODUCTS

2.1 MANUFACTURERS

A. Erosion Control Mat:

1. BP Geotextiles dba Civil Engineering Fabrics, AMOCO Fabrics and Fibers Company, BP plc, Austell GA (Website: www.geotextile.com, Voice: 800.445.7732) SuperGro 4868 Erosion Control Mat.

2. Mirafi, Industrial Fabrics Division, Ten Cate Nicolon USA, Pendergrass GA (Website: www.mirafi.com, Voice: 888.795.0808) Miramat TM8 Erosion Control Mat.

3. Synthetic Industries, SI Geosolutions, SI Corporation, Chattanooga TN (Website: www.fixsoil.com, Voice: 800.621.0444), Landlok TRM 1051 Erosion Control Mat.

4. Engineer approved equivalent.

2.2 MATERIALS

A. Straw Bales:

1. Size: 5 cubic feet minimum.
2. Size of Stakes: 4’ minimum length and 3” minimum diameter.

B. Silt Fence (AASHTO M-288, Temporary Silt Fence):

1. ProPex 2130 by BP Geotextiles.
2. FX-11 by Carthage Mills.
3. GTF190 by Linq Industrial Fabrics.

PART 3 – EXECUTION

3.1 PREPARATION

A. Protection:

1. Protect existing structures and facilities from erosion and sedimentation. Items to be protected include, but are not limited to:

   a. All downstream property.
   b. Natural waterways.
   c. Streams.
   d. Catch basins.
   e. Drainage ditches.
   f. Roads.
   g. Gutters.
   h. Natural buffer zones.

2. Control measures such as erection of silt fences, barriers, check dams, or other structures shall begin prior to any land disturbing activity. Additional measures shall be constructed as required during construction at no additional cost to the Owner.

3.2 PERFORMANCE

A. Topsoil that has been stripped in clearing the Site shall be stockpiled in a manner that provides temporary diversion – or water-holding devices – that allow sediments to settle out.

   1. Generally, stack topsoil at locations approved by the Owner.

B. Seed the stockpiled topsoil and adjoining areas with fast-growing temporary vegetation to prevent soil erosion and rapid runoff.

3.3 FIELD QUALITY CONTROL

A. All erosion and sedimentation control work shall be subject to the continuing inspection and acceptance of the ITL and the Owner. It will be the ITL's decision, in conjunction with the Owner, as to the acceptability of any materials or work containing those materials.

B. Maintenance of Erosion and Sedimentation Control:

   1. The Contractor shall periodically inspect all installed erosion and sedimentation control measures, especially after periods of rainfall, to ensure that the devices are still in place and operating effectively.

   2. If devices are found to be disturbed or inoperable, clean, reset, or replace devices to the satisfaction of, and at no additional cost to, the Owner.

   3. Continually maintain all installed erosion and sedimentation control measures during construction, and until disturbed areas are stabilized.

4. Remove accumulated sediments when control device is at one-half capacity or as otherwise indicated on the Drawings.

5. Inspect erosion control devices per the requirements of the NPDES permit.

6. Comply with reporting and record keeping requirements of the NPDES permit.

3.4 ADJUSTING

A. Stabilize protected areas permanently prior to removal of protective devices.

B. After final establishment of permanent stabilization, remove existing sediment control measures. Remove accumulated sediments, if any.

END OF SECTION 31 25 00

SECTION 32 10 00 - BASES, BALLASTS, PAVEMENTS, AND APPURTENANCES

PART 1 – GENERAL

1.1 SCOPE OF WORK

In general, the Contractor shall provide all labor, materials and equipment in order to achieve the Work of this Specification Section, and as indicated and where indicated on the Contract Drawings.

1.2 RELATED DOCUMENTS

A. Drawings and general provisions of the Contract, including General and Supplementary Conditions and Division 1 Specification Sections, apply to this Section.

1.3 SUMMARY

A. Under this Section, provide all labor, tools, materials, and equipment required to complete the following items of the Work in accordance with the Drawings:

1. Geotextile beneath Porous Paving
2. Bituminous concrete pavement.
3. Seal coating of designated areas of bituminous concrete pavement
4. Reinforced Portland cement concrete pavement.
5. Concrete sealing.

B. Related Sections:

1. Section 01 45 23 – Testing Laboratory Services: The Owner will provide and pay for, under separate contract, the services of a qualified, Independent Testing Laboratory (ITL) to ensure that the following satisfy the requirements of this Section:

   a. Bituminous Concrete Pavement: The aggregate base course gradations, the asphalt mix designs and in-place densities, the thickness of binder and surface courses, and other related work.

   b. Portland Cement Pavement: All materials and procedures furnished are per the specifications.

2. Section 02 05 00 – Basic Site Materials and Methods.

3. Section 31 22 00 – Earthwork: Rough grading.

4. Section 03 30 00 – Cast-in-Place Concrete:

   a. Concrete formwork.
   b. Construction, contraction, expansion, and isolation joints.
   c. Concrete reinforcement.

5. Section 32 17 23 – Painted Traffic Marking.

1.4 REFERENCES

A. American Association of State Highway and Transportation Officials (AASHTO):

1. Cutback Asphalt (Medium-Curing) (AASHTO M-82-75 (Reapproved 1996)).

B. American Concrete Institute (ACI):

1. Hot Weather Concreting (ACI 305R-91).

2. Cold Weather Concreting (ACI 306R-88).

3. Building Code Requirements for Structural Concrete (ACI 318-99): Substitute the title "Project Manager" for "Commissioner of Building" throughout the code.

C. ASTM International:

1. Standard Practice for Making and Curing Concrete Test Specimens in the Field (ASTM C-31 / C-31M-03a).

2. Standard Test Method for Compressive Strength of Cylindrical Concrete Specimens (ASTM C-39 / C-39M-03).

3. Standard Specification for Ready-Mixed Concrete (ASTM C-94 / C-94M-04a).

4. Standard Specification for Portland Cement (ASTM C-150-04a).

5. Standard Practice for Sampling Freshly Mixed Concrete (ASTM C-172-04).

6. Standard Specification for Chemical Admixtures for Concrete (ASTM C-494 / C-494M-04).

7. Standard Test Method for Scaling Resistance of Concrete Surfaces Exposed to Deicing Chemicals (- / C-672M-03).

8. Standard Test Method for Laboratory Compaction Characteristics of Soil Using Standard Effort (12,400 ft-lbf/ft^3 (600 kN-m/m^3)) (ASTM D-698-00ae1).

E. Standard Test Method for Resistance to Plastic Flow of Bituminous Mixtures Using Marshall Apparatus (Six-inch Diameter Specimen) (ASTM D-5581-96(2001)).

F. Standard Specification for Emulsified Refined Coal Tar (Mineral Colloid Type) (ASTM D-5727-00).

G. Standard Test Method for Determining F_F Floor Flatness and F_L Floor Levelness Numbers (ASTM E-1155-96 (2001)).

H. New York State Department of Transportation: Latest edition of Construction and Material Specifications.

Note: Methods of measurement and basis of payments shall not apply since all of the Work is covered under the Contract Lump Sum.

I. National Academy of Sciences (NAS) National Research Council (NRC) Transportation Research Board (TRB) National Cooperative Highway Research Program (NCHRP) Report: Concrete Sealers for Protection of Bridge Structures.

1.5 SYSTEM DESCRIPTION

A. Bituminous Concrete Paving: Constructed and compacted to thicknesses per the Drawings and Specifications. Provide lines, grades, and typical pavement section as shown on the Drawings.

B. Portland Cement Concrete Pavement: Conform to ACI 318.
1. Exception: Where otherwise specified herein or indicated on the Drawings.

1.6 SUBMITTALS

A. Submit Product Data (including product descriptions, technical specifications, and the like) per the General Requirements for:
1. Sealcoat.
2. All products, mixes, admixtures, and treatments used in the installation of plain and reinforced Portland cement concrete pavement.

B. Submit Aggregate Gradations per the General Requirements for:
1. Bituminous Concrete.

C. Submit Mix Designs per the General Requirements for:
1. Bituminous Concrete.
2. Sealcoat.
3. Submit a letter certifying that the submitted bituminous concrete, and Portland cement concrete mix designs meet the requirements of the New York Department of Transportation. Items as indicated in the specifications.
4. Portland Cement Concrete. Submit Mix Designs for each type specified to the Architect/Engineer, the ITL, and the Project Manager. Only concrete made with a Mix Design approved by the ITL and the Project Manager shall be used in the Work. Mix Designs shall be complete and include the following:
a. A mix design summary sheet indicating types and quantities of all cements, aggregates, water admixtures, and other mix constituents, and resulting slumps, water/cement ratios, and entrained air percentages.

b. Test data for each aggregate used, to include as a minimum:
1) Plant location.
2) Sieve analysis.
3) Specific gravity.
4) Absorption.
5) Soundness.
c. Compression test results of each proposed mix, to include the following:
1) Result from not less than 30 consecutive compressive strength tests, performed within the preceding 90 days, on concrete provided from the same plant, and of the same materials, and essentially same mix. A compressive strength test shall be defined as the average 28 day compressive strength of companion cylinders made conforming to ASTM C-172 and ASTM C-31, and tested in conformance with ASTM C-39.
2) Computation of the average strength and standard deviation of the compressive strength data, as established by ACI 318.

3) Demonstration that the design average strength of the proposed mix design meets or exceeds the specified strength per the following:
   a. If standard deviation is less than 500 PSI, then design average strength ³ specified minimum strength + (1.34 X standard deviation).
   b. If standard deviation is greater than 500 PSI, the design average strength ³ specified minimum strength - 500 + (2.33 X standard deviation).

D. Manufacturer's Instructions: Submit per the General Requirements for all products, mixes, admixtures, and treatments used in the installation of plain and reinforced Portland cement concrete pavement.

E. Certificates. Submit letters of certification per the General Requirements from the manufacturers of each admixture and the supplier of each type of aggregate and concrete verifying that the materials proposed meet the ASTM requirements specified elsewhere in this Section. In addition, should admixtures from varying manufacturers be utilized, the Concrete Supplier shall certify in writing that all products are compatible for use in the Design Mix.

1.7 QUALITY ASSURANCE

A. Regulatory Requirements: Perform the Work of this Section per the New York State Department of Transportation: Latest edition of Construction and Material Specifications referenced above.
   1. Exception: As amended, modified, or supplemented herein.

1.8 PROJECT CONDITIONS

A. Existing Conditions: Prior to submitting their Bid, the Bidders shall visit the Site, inform themselves of the conditions, and make their own estimates of the facilities and difficulties attending the execution of the Work.

B. Environmental Requirements:
   1. Tack Coat: Do not apply under the following conditions.
      a. During wet or cold weather.
      b. After sunset.
      c. To a wet surface.

   2. Concrete: Mix, place, cure, and test per the following.
      a. Placed During Hot Weather: ACI 305R.
      b. Placed During Cold Weather: ACI 306R.

PART 2 – PRODUCTS

2.1 MANUFACTURERS

A. Sealcoats:
   1. The Brewer Company, Markham IL (Website: www.asphaltstore.com, Voice: 708.339.9000).

2. Henry Building Products Division, Henry Company, Huntington Park CA (Website: www.henry.com/products/prod_ind_pavement.htm, Voice: 800.486.1278).
3. Maintenance, Incorporated, A Premier Farnell Compnay, Wooster OH (Website: www.maintinc.com, Voice: 800.892.6701).
4. Neyra Industries, Incorporated, Cincinnati OH (Website: www.neyra.com, Voice: 800.543.7077).

B. Products for Portland Cement Concrete Pavement:

1. ChemMasters Specialty Construction Products, Madison OH (Website: www.chemmasters.net, Voice: 800.486.7866).

2. The Continental Products Company, Cleveland OH (Website: www.continentalprod.com, Voice: 800.305.5869).

3. The Euclid Chemical Company (EUCO), Cleveland OH (Website: www.euclidchemical.com, Voice: 800.321.7628).

4. Grace Construction Products (a unit of W.R. Grace and Company) Cambridge MA (Website: www.na.graceconstruction.com, Voice: 877.423.6491).

5. Master Builders, Incorporated (part of DeGussa AG), Cleveland OH (Website: www.masterbuilders.com, Voice: 800.628.9990).

6. Max Katz Bag Company, Incorporated, Indianapolis IN (Voice: 800.225.3729).

7. Midwest Canvas Corporation, Chicago IL (Website: www.midwest.com, Voice: 773.287.4400).

8. Reef Industries (Armorlon Division), Incorporated, Houston TX (Website: www.reefindustries.com, Voice: 800.231.6074).

9. Sika Corporation (USA), Lyndhurst NJ (Website: www.sikausa.com, Voice: 800.933.7452).

10. WR Meadows, Incorporated, Hampshire IL (Website: www.wemeadows.com, Voice: 800.342.5976).

2.2 MATERIALS

A. Primer for Bituminous Concrete Pavement: MC-30 or MC-70.

B. Aggregate for Bituminous Concrete Pavement: Per New York State DOT Specifications

C. Sealcoat: Coal-tar emulsion per the component requirements of ASTM D-5727 (with premium additive), similar and equal in quality to AF-PS(P). Subject to compliance with the requirements of this Section, provide either the named product or one of the comparable products listed below:

1. Brewer Cote (with Tarmax) by Brewer.
2. PermaSeal (with PermaTuff) by Henry.
3. Tarconite (with Armorflex) by Neyra.

D. Portland Cement: ASTM C-150, Type I. Use only one brand of cement throughout the Project.

E. Fine Aggregates for Portland Cement Concrete Pavement: Clean, uncoated sand per ASTM C-33.

F. Coarse Aggregates for Portland Cement Concrete Pavement: Crushed stone per ASTM C-33 with gradation per ASTM C-33, Table 2. Maximum aggregate size shall be as specified elsewhere herein.

G. Mixing Water: Clean and free from all oil, acid and injurious amounts of alkalis and other salts.

H. Admixtures:

1. General: All admixtures shall be a common manufacturer and shall be tested for compatibility within the specified mix. The Concrete Supplier shall provide a letter of certification of compatibility as specified in CERTIFICATES above.

2. Low-Range Water-Reducing Agent: ASTM C-494, Type A.

a. Eucon WR-75 by EUCO.
b. Pozzolith 200-N by Master Builders.
c. Plastocrete 161 by Sika.
d. Another low range water-reducing admixture similar and equal in quality to the admixtures listed above – and approved by the Architect/Engineer as Owner's Representative.

3. Air-Entraining Agent: A liquid compound specifically formulated for the sole purpose of entraining air per ASTM C-260.

a. Air Mix by EUCO.
b. Micro-Air by Master Builders.
c. Daravair 1400 by Grace.
d. Another air-entraining agent similar and equal in quality to the agents listed above – and approved by the Architect/Engineer as Owner's Representative.

4. Salts, chemicals, and other substances for controlling the set or prevention of freezing shall not be used.

I. Curing Sheets:

1. 40-inch wide burlap weighing not less than 10 ounces per linear yard, extrusion-coated on one side with a white opaque polyethylene film (with a nominal thickness between 0.004- and 0.005-inches). Securely bond film to the burlap so that there will be no separation of the materials during handling and curing of the concrete. Equal to one of the following:
a. BurLene by Max Katz Bag Company.
b. Curelap by Midwest Canvas.

2. Contractor's Option: A naturally colored, non-woven polypropylene fabric with a 4-mil non-perforated reflective (white) polyethylene coating containing stabilizers

to resist degradation from ultraviolet light. Fabric shall exhibit low permeability and high moisture retention. Similar and equal in quality to Transguard 4000 by Reef.

J. Anti-Spalling Treatment: A uniformly blended mixture of mineral spirits and boiled linseed oil specifically designed to penetrate the concrete surface and seal against moisture and deicing chemicals.

1. Anti-Spall 50 by ChemMasters.
2. Anti-Spalling Compound by Continental Products.
3. Linseed Oil Treatment by EUCO.
4. Lin-Seal by WR Meadows.
4. Another anti-spalling treatment similar and equal in quality to the treatments listed above – and approved by the Engineer.

2.3 MIXES

A. Bituminous Concrete Binder Course Mixture: Conform to MDOT Section 403, 25mm mixture:

Sieve Size	Total Percent Passing by Weight
1-1/2 Inch	100
1 Inch	90-100
3/4 Inch	89 max.
No. 8	16-50
No. 200	4.0-9.0
Bituminous Content	5.5-7.5

B. Bituminous Concrete Surface Course Mixture: Conform to MDOT Section 403, 12.5mm mixture:

Sieve Size	Total Percent Passing by Weight
3/4 Inch	100
1/2 Inch	90-100
3/8 Inch	89 max.
No. 8	20-60
No. 200	4.0-9.0
Bituminous Content	5.5-7.5

C. Bituminous Concrete Surface Course Mixture: Conform to MDOT Section 403, 9.5mm mixture:

Sieve Size	Total Percent Passing by Weight
1/2 Inch	100
3/8 Inch	90-100
No. 4	89 max.
No. 8	22-70
No. 200	4.0-9.0
Bituminous Content	5.5-7.5

D. Portland Cement Concrete: Proportioning and Strength.

1. Mix per ASTM C-94.

a. Exception: Where otherwise specified herein.

2. All concrete shall be made with Portland cement, fine and coarse aggregate, and admixtures as specified herein and as outlined in the table below

3. Concrete for exterior concrete pavement shall contain six percent plus-or-minus one percent total entrained air. Obtain air entrainment by the use of the specified air entraining agent.

4. Physical Properties:

Location	28 Day Strength	Maximum Aggregate Size No.	Water Reducing Agent	Air Entraining Agent	Maximum Allowable Slump	Maximum Allowable Water/Cement Ratio
Exterior Concrete Pavement	4000 PSI	1 inch	Yes	Yes	4 inches	0.45

2.4 SOURCE QUALITY CONTROL

A. All materials and procedures shall be approved by the ITL and the Owner before use, and only materials and procedures so approved shall be used in the Work.

B. The ITL shall have the authority and is expected by the Owner to reject all materials that do not conform to these Specifications. The Contractor shall be required to cooperate with the representatives of the ITL in every way and at no time prevent or hinder the performance of their work.

PART 3 – EXECUTION

3.1 PREPARATION

A. Before application of base course, proof roll the entire subbase area indicated to be paved with a fully-loaded tandem dump truck grossing at least 24 tons, a fully-loaded single axle dump truck grossing at least 15 tons, or other approved equipment.

1. Before commencing operations, portions of the subbase that are determined to be unsatisfactory shall be removed, replaced with suitable fill, re-compacted, and re-tested – at no additional cost to Owner.

3.2 INSTALLATION

A. Bituminous Concrete Pavement:

1. Apply a tack coat of emulsified asphalt to all vertical contact surfaces of existing pavement, manholes, catch basins, curbs, and all other contact surfaces prior to paving.

2. Compacted thickness of bituminous binder courses and bituminous surface courses Drawings.

B. Compaction of bituminous concrete pavement shall be per the requirements of New York State DOT – subject to the following limitations and additional requirements:

1. The number of rollers furnished shall be sufficient to obtain the required compaction while the mixture is in a workable condition.

a. Perform initial rolling with steel-wheeled tandem rollers, steel three-wheeled rollers, or vibratory rollers.

b. Perform intermediate rolling with pneumatic tire rollers.

Note: In no case shall initial rolling be delayed to permit the same pneumatic tire rollers to perform both initial and intermediate rolling.

c. Perform final rolling using either two-wheel or three-wheel tandem type rollers weighing not less than 10 tons. Final rolling shall eliminate all marks from previous rolling.

2. In areas too difficult for the access of rollers, use vibrating plate compactors or hand tampers to achieve the specified compaction.

3. Compaction of lifts greater than 3 inches (compacted thickness) will be employed will produce the desired degree of compaction.

4. The completed bituminous concrete pavement shall have a density equal to or greater than 98 percent (ASTM D-5581 (Marshall Design Method), 50 Blows) or 99 percent of control strip density. Check the surface of the completed pavement longitudinally and transversely for smoothness with a 10-foot straight edge. The surface shall not vary more than 1/8 inch in 10 feet.

C. Sealcoat: Apply on the bituminous concrete pavement (not on porous pavement), in three coats, per the Sealcoat Manufacturer's printed specifications for the application. The first two coats shall include sand. The third coat shall include the specified premium additive.

D. Portland Cement Concrete Pavement:

1. Deposit per ASTM C-94.

a. Exception: Where otherwise specified herein.

2. Finishes:

a. Exterior pavement shall first be machine-floated and then receive a final rough broom finish. The resulting surface shall have a uniformly gritty texture with longitudinal striations approximately 1/16-inches deep.

3. Curing:

a. Maintain all concrete pavement continuously wet and above 50 degrees Fahrenheit for a minimum of a full seven days after placing.

1) Exception: As otherwise specified herein.

b. Following the finishing operation the concrete shall be thoroughly wet down and then covered with curing sheets. Neatly position sheets flat against the surface, joints lapped a minimum of 12 inches, and securely held in position by continuous 2 inch by 4 inch (or larger) wood members. Leaving concrete exposed overnight will be grounds for rejection of the installation.

c. Curing sheets shall then remain continuously in place for a full seven days.

1) Exception: Portions shall be temporarily removed for control joint saw cutting. At no other time during this period shall the sheets be pulled back or removed for proceeding work.

4. Surface Treatment: After all exterior concrete slabs are 28 days old, apply an anti-spalling treatment as specified herein. Ensure that surfaces are clean and dry. Apply two coats in strict accordance with the Anti-Spalling Compound Manufacturer's instructions.

3.3 FIELD QUALITY CONTROL

A. All procedures shall be approved by the ITL and the Owner before use, and only procedures so approved shall be used in the Work.

B. Thickness Control for Base Course and Bituminous Concrete Pavements: It is the intent of this Section that the base course and bituminous concrete pavements shall be constructed to the compacted thicknesses shown on the Drawings. Thickness determinations consisting of cores at least 2 inches in diameter will be made at such points as the Owner or the ITL may select.

1. The thickness shall be deemed acceptable if the average thickness is equal to or greater than the specified compacted thickness AND no single thickness determination is deficient by more than 1/4 inch.

2. When an individual thickness determination is more than 1/2 inch greater than the specified thickness, it shall only be considered to be the specified thickness plus 1/2 inch in determining the average thickness.

3. Pavement areas of deficient thickness, that are accepted by the Owner under the provisions of Defective Work or Materials (Article of the General Conditions),

shall not be taken into account in calculating the average thickness of the remaining pavement area.

4. Area of pavements found to be deficient by more than 1/4 inch shall be considered non-conforming and subject to the provisions of Defective Work or Materials (Article of the General Conditions). Perform corrective work as directed by the Owner at no additional cost to the Owner.

C. Portland Cement Concrete Pavement:

1. No concrete paving shall be placed before the ITL approves the forms and reinforcing. Concrete pouring shall be scheduled 24 hours ahead and written notice or telephone call shall be made to the testing laboratory. No concrete shall be poured without the approval of the testing laboratory. No concrete shall be poured on Saturdays or Sundays without the written approval of the ITL and the Owner.

2. The ITL will make three 6-inch diameter by 12-inch high test cylinders from each 40 cubic yards or fraction thereof of concrete and for each type of concrete as it is cast in any one day. The ITL shall be responsible for the making and curing of test cylinders in strict accordance with ASTM C-31.

3. Of the three cylinders made from each 40 cubic yards of concrete, one will be tested at an age of seven days, and the other two at an age of 28 days. Each test report will be submitted to the Owner by the ITL in triplicate and will include the following information.

a. Date sample was made.
b. Location of concrete placement from which test sample was made.
c. Date of sample testing.
d. Slump and air content of concrete as placed.
e. Mix proportions.
f. Admixture content.
g. Density of concrete.
h. Description of break.
i. Concrete strength specified.

3.4 CLEANING

A. Upon completion of the Work, remove all surplus materials, debris, tools, and equipment from the Site.

3.5 PROTECTION

A. Prohibit motor vehicle traffic on Portland cement concrete pavement until it has reached a compressive strength of 4,000 PSI.

END OF SECTION 32 10 00

SECTION 32 11 00 - UNBOUND BASE COURSES

PART 1 - GENERAL

1.1 SCOPE OF WORK

A. Under this Section of the Specifications, the Contractor shall provide all labor, tools, materials, and equipment required to complete the following items of work in accordance with the Drawings and Specifications:

1. Geotextile beneath aggregate base.

2. Aggregate base under flexible and rigid pavements.

3. Granular base course under floor slabs.

1.2 RELATED WORK SPECIFIED ELSEWHERE

A. Quality Requirements - See Section 01 40 00.

B. Site Clearing - See Section 31 11 00.

C. Earthmoving - See Section 31 20 00.

D. Flexible Pavement - See Section 32 12 00.

E. Rigid Pavement - See Section 32 12 16.

1.3 GENERAL REQUIREMENTS

A. The Contractor shall visit the site, inform himself of the conditions, and make his own estimates of the facilities and difficulties attending the execution of the work prior to submitting his bid.

1.4 SUBMITTALS

A. The Contractor shall submit, in accordance with Section 01 33 00, data sheets for geotextile fabric, and aggregate gradation and durability tests reports for aggregate base course.

B. No less than five days prior to the placement of aggregate base under pavements or granular base course under floor slabs the Contractor shall submit to the testing laboratory for appropriate testing and approval a 50 pound sample of the proposed granular material.

C. No material shall be placed until samples have been reviewed by the testing laboratory for general conformance with the Contract Documents and approved for use on this project.

D. The Contractor shall notify the testing laboratory and Owner, in writing, five days prior to placement of unbound base courses. The notice shall state the equipment to be used, the date and time that operations will start, and the name of the person who will be in charge of

the operations in the field. If work is interrupted, the Contractor shall notify the testing laboratory 24 hours prior to the resumption of work.

1.5 REGULATORY REQUIREMENTS

A. Aggregate Base Course work shall comply with all the requirements of the latest edition of the New York State Department of Transportation specifications, except as amended, modified, or supplemented herein. Methods of measurement and basis of payment shall not apply since all work is covered under the Contract Lump Sum.

1.6 QUALITY ASSURANCE

A. The Owner shall provide and pay for, under separate contract, the services of a qualified, independent testing laboratory to insure that all unbound base course gradations, in-place densities, thickness of course(s), and other related work are in compliance with all the provisions of the specifications. See Section 01500 - Testing Laboratory Services.

B. Reference Standards:

1. Some products and execution are specified in this Section by reference to published specifications or standards of the following (with respective abbreviation used):

a. The American Society for Testing and Materials (ASTM)

PART 2 - PRODUCTS

2.1 GEOTEXTILE BENEATH AGGREGATE BASE

A. Geotextile fabric for use beneath aggregate base for pavements shall be Mirafi 140N as manufactured by TenCate Geosynthetics Americas., Pendergrass, Georgia.

2.2 AGGREGATE BASE COURSE (UNDER PAVEMENTS)

A. Aggregate base shall consist of new, imported, crushed stone conforming to (New York State DOT specs) or recycled concrete. Gradation shall conform to the following table:

Screen Size	**% Passing**
1-1/2 Inch	100%
1 Inch	90-100%
1/2 Inch	65-85%
3/8 Inch	55-75%
# 4	40-55%
# 8	30-45%
# 16	22-38%
# 30	18-27%
# 50	12-18%
# 100	7-13%
# 200	3-8%

2.3 GRANULAR BASE COURSE (UNDER FLOOR SLABS)

A. Granular base course material shall be bank run gravel or sand, or processed stone, which meets the gradation criteria of the Unified Soil Classification System for well graded gravels (GW) or sand (SW or SP). Maximum particle size shall pass a 2 inch sieve.

B. The material shall contain less than 10% fines passing the No. 200 sieve, and shall have a maximum plasticity index of 6.

PART 3 - EXECUTION

3.1 PAVEMENT SUBGRADE PREPARATION

A. The Contractor shall proof roll the entire subgrade area which is to be paved with a fully-loaded tandem dump truck grossing at least 24 tons, a fully-loaded single axle dump truck grossing at least 15 tons, or other approved equipment before application of base course. This proof rolling shall be observed by a testing laboratory representative. Areas found to be unsatisfactory by the testing laboratory representative or the Owner shall be undercut and replaced with suitable fill, recompacted, and retested before installation of aggregate base shall commence, at no additional cost to Owner,

3.2 INSTALLATION OF GEOTECH MATERIALS BENEATH AGGREGATE BASE COURSE

A. Geotextile shall be installed in the pavement section as shown on the Drawings per manufacturer's instructions.

3.3 INSTALLATION OF UNBOUND BASE COURSES

A. Unbound base courses shall be constructed in layers not exceeding 6 inches in compacted thickness.

B. Material shall be deposited by mechanical means to a true line and grade. Hand spreading or tailgating of materials will be allowed only in small inaccessible areas.

C. The material shall be installed at the optimum moisture content (plus or minus 2 percent). Water shall be added to the material during rolling as required to maintain the optimum moisture content.

D. Each layer of base course shall be compacted to a minimum density of 95 percent of maximum laboratory dry weight as determined by ASTM D1557 (Modified Proctor).

3.4 CLEAN-UP

A. Upon completion of the Work, all surplus materials, debris, tools, and equipment shall be removed from the site.

END OF SECTION 32 11 00

SECTION 32 11 23 - AGGREGATE BASE COURSE

PART 1 - GENERAL

1.1 SECTION INCLUDES

A. Aggregate base course.

B. Paving aggregates.

1.2 RELATED SECTIONS

A. Section 31 22 00 - Grading: Preparation of site for base course.

B. Section 31 23 23 - Fill and Backfill: Compacted fill under base course.

C. Section 33 42 16 - Manholes and Covers: Manholes and Drains including frames.

D. Section 32 12 16 - Bituminous Concrete Paving: Binder and finish asphalt courses.

E. Section 31 22 00 - Grading: Topsoil fill at areas adjacent to aggregate base course.

1.3 REFERENCES

A. ASTM D 698 - Standard Test Methods for Laboratory Compaction Characteristics of Soil Using Standard Effort (12,400 ft-lbf/ft3 (600 kN-m/m3)).

B. ASTM D 1556 - Standard Test Method for Density and Unit Weight of Soil in Place by the Sand-Cone Method.

1.4 SUBMITTALS

A. See Section 01 33 00 - Submittal Procedures.

B. Materials Sources: Submit name of imported materials source.

C. Aggregate Composition Test Reports: Results of laboratory tests on proposed and actual materials used.

D. Compaction Density Test Reports.

1.5 PROJECT CONDITIONS

A. Provide sufficient quantities of aggregate to meet project schedule and requirements. When necessary, store materials on site in advance of need.

B. When aggregate materials need to be stored on site, locate stockpiles where indicated.
   1. Separate differing materials with dividers or stockpile separately to prevent intermixing.
   2. Prevent contamination.
   3. Protect stockpiles from erosion and deterioration of materials.

C. Verify that survey bench marks and intended elevations for the Work are as indicated.

PART 2 - PRODUCTS

2.1 MATERIALS

A. Coarse Aggregate: Coarse aggregate, conforming to New York State Highway Department standard.

B. Fine Aggregate: Sand; conforming to New York State Highway Department standard.

C. Geotextile Fabric: Non-biodegradable, woven.

2.2 SOURCE QUALITY CONTROL

A. See Section 01 40 00 - Quality Requirements, for general requirements for testing and analysis of aggregate materials.

B. Test and analyze samples for compliance before delivery to site.

C. If tests indicate materials do not meet specified requirements, change material and retest.

D. Provide materials of each type from same source throughout the Work.

PART 3 - EXECUTION

3.1 EXAMINATION

A. Verify substrate has been inspected, gradients and elevations are correct, and is dry.

3.2 PREPARATION

A. Correct irregularities in substrate gradient and elevation by scarifying, reshaping, and re-compacting.

B. Do not place aggregate on soft, muddy, or frozen surfaces.

3.3 INSTALLATION

A. Spread aggregate over prepared substrate to a total compacted thickness as shown on the details.

B. Place aggregate in maximum 4 inch layers and roller compact to specified density.

C. Level and contour surfaces to elevations and gradients indicated.

D. Add small quantities of fine aggregate to coarse aggregate as appropriate to assist compaction.

E. Add water to assist compaction. If excess water is apparent, remove aggregate and aerate to reduce moisture content.

F. Use mechanical tamping equipment in areas inaccessible to compaction equipment.

3.4 TOLERANCES

A. Flatness: Maximum variation of 1/4 inch measured with 10 foot straight edge.

B. Scheduled Compacted Thickness: Within 1/4 inch.

C. Variation From Design Elevation: Within 1/2 inch.

3.5 FIELD QUALITY CONTROL

A. See Section 01 40 00 - Quality Requirements, for general requirements for field inspection and testing.

B. Perform compaction density testing on compacted aggregate base course in accordance with ASTM D1556.

C. Evaluate results in relation to compaction curve determined by testing uncompacted material in accordance with ASTM D 698 ("standard Proctor").

D. If tests indicate work does not meet specified requirements, remove work, replace and retest.

E. Proof roll compacted aggregate at surfaces that will be under slabs-on-grade, pavers, and paving.

3.6 CLEAN-UP

A. Remove unused stockpiled materials; leave area in a clean and neat condition. Grade stockpile area to prevent standing surface water.

END OF SECTION 32 11 23

SECTION 32 12 00 - FLEXIBLE PAVEMENT

PART 1 - GENERAL

1.1 SECTION INCLUDES

A. Under this Section of the Specifications the Contractor shall provide all labor, tools, materials, and equipment required to complete the following items of work in accordance with the Drawings and Specifications:

1. Asphaltic concrete pavements.
2. Sealcoating of designated areas.

1.2 GENERAL REQUIREMENTS

A. The asphaltic concrete paving shall consist of asphaltic concrete constructed and compacted to a thickness in accordance with the Drawings and Specifications. The lines, grades, and typical pavement section shall be as shown on the Drawings.

B. The Contractor shall visit the site, inform himself of the conditions and make his own estimates of the facilities and difficulties attending the execution of the work prior to submitting his bid.

1.3 RELATED WORK SPECIFIED ELSEWHERE

A. Quality Requirements - See Section 01 40 00.

B. Earthmoving – See Section 31 20 00.

C. Unbound Base Courses – See Section 32 11 00.

D. Rigid Pavement – See Section 32 12 16.

E. Parking and Lane Striping - See Section 32 17 23.

1.4 SUBMITTALS

A. Mix Design and Product Data: The Contractor shall submit, in accordance with Section 01 33 00, Mix Design and Aggregate Gradation for Asphaltic Concrete(s), and Sealcoat.

1.5 REGULATORY REQUIREMENTS

A. The Work performed under this Section shall comply with all the requirements of the latest edition of the New York Department of Transportation specifications, except as amended, modified, or supplemented herein.

1.6 QUALITY ASSURANCE

A. The Owner shall provide and pay for, under separate contract, the services of a qualified, independent testing laboratory to ensure that the asphaltic concrete mix designs and in-place

densities and thicknesses of binder, surface courses, and other related work are in compliance with all the provisions of the specifications. See Section 01 45 23 - Testing Laboratory Services.

B. Reference Standards

1. Some products and execution are specified in this Section by reference to published specifications or standards of the following (with respective abbreviation used):

a. The American Society for Testing and Materials (ASTM)

PART 2 - PRODUCTS

2.1 ASPHALTIC CONCRETE BINDER COURSE

A. Asphaltic concrete binder course shall conform to New York State DOT.

2.2 ASPHALTIC CONCRETE SURFACE COURSE

A. Asphaltic concrete surface course shall conform to New York State DOT.

B. Course aggregate shall be crushed stone.

2.3 SEALCOAT

A. Sealcoat shall be advanced formula J-16 pavement sealer with AFR plus additive as manufactured by Maintenance, Inc., Wooster, Ohio (1-800-892-6701).

PART 3 - EXECUTION

3.1 BASE PREPARATION

A. If adverse weather or a significant amount of time, in the opinion of the Owner or testing laboratory, has elapsed since the installation of the aggregate base course, the Contractor shall proof roll the base course with approved equipment and any unsatisfactory areas shall be removed. Those areas shall then be replaced with the specified material, recompacted, and retested prior to the commencement of paving at no additional cost to Owner.

3.2 INSTALLATION OF ASPHALTIC CONCRETE PAVEMENT

A. Apply a prime coat of .35 gallon per square yard of MC-30 or MC-70 to the surface of the aggregate base course.

B. Apply a tack coat of emulsified asphalt to all vertical contact surfaces of existing pavement, manholes, catch basins, curbs, and all other contact surfaces prior to paving. Tack coat shall not be applied during wet or cold weather, after sunset, or to a wet surface.

C. See pavement details on the Drawings for compacted thickness of asphaltic binder course and asphaltic surface course of various pavement types.

3.3 COMPACTION OF ASPHALTIC CONCRETE PAVEMENT

A. Compaction of asphaltic concrete shall be in accordance with the requirements of New York State DOT subject to the following limitations and additional requirements.

B. The number of rollers furnished shall be sufficient to obtain the required compaction while the mixture is in a workable condition. Initial rolling shall be performed with a steel-wheeled tandem roller, steel three-wheeled roller or vibratory roller. Intermediate rolling shall be performed with pneumatic tire rollers. In no case shall initial rolling be delayed to permit the same pneumatic roller to perform both initial and intermediate rolling. Final rolling shall be performed using either two-wheel or three- wheel tandem type rollers weighing not less than 10 tons. Final rolling shall eliminate all marks from previous rolling.

C. In areas too difficult for the access of a roller, a vibrating plate compactor or a hand tamper shall be used to achieve the specified compaction.

D. Compaction of lifts greater than 3 inches compacted thickness will be permitted only if the Contractor can demonstrate that the equipment and methods to be employed will produce the desired degree of compaction.

E. The completed asphaltic concrete paving shall have a density equal to or greater than 98 percent (Marshall Design Method ASTM 1559 50 Blows) or 99 percent of control strip density. The surface of the completed pavement shall be checked longitudinally and transversely for smoothness with a 10 foot straight edge. The surface shall not vary more than 1/8 inch in 10 feet.

3.4 THICKNESS CONTROL FOR ASPHALTIC CONCRETE PAVEMENT

A. It is the intent that the asphaltic concrete pavement shall be constructed to the compacted thickness shown on the Drawings. Thickness determinations consisting of cores at least 2 inches in diameter will be made at such points as the Owner or testing lab may select. The thickness shall be deemed acceptable if the average thickness is equal to or greater than the specified compacted thickness <u>and</u> no single thickness determination is more than 1/4 inch less than the specified thickness.

1. When an individual thickness determination is more than 1/2 inch greater than the specified thickness, it shall be considered the specified thickness plus 1/2 inch in determining the average thickness.

2. Pavement areas of deficient thickness, which are accepted by the Owner under the provisions of Article 1.16 Defective Work or Materials of the General Conditions, shall not be taken into account in calculating the average thickness of the remaining pavement area B. Area of pavements found to be greater than 1/4 inch less than the specified thickness shall be considered non-conforming and subject to the provisions of General Conditions, Article 1.16 Defective Work or Materials. Corrective work shall be performed as directed by the Owner at no additional cost to the Owner.

3.5 SEALCOAT

A. Sealcoat shall be applied on the asphaltic concrete pavement except porous pavement.

B. Sealcoat shall be applied in three coats in accordance with the printed Maintenance, Inc. application specifications.

C. The first two coats shall include sand; the third coat shall include AFR Plus Additive.

3.6 CLEAN-UP

A. Upon completion of the Work, all surplus materials, debris, tools, and equipment shall be removed from the site.

END OF SECTION 32 12 00

SECTION 32 12 16 - BITUMINOUS CONCRETE PAVING

PART 1 - GENERAL

1.1 SECTION INCLUDES

A. Double course bituminous concrete paving.

1.2 RELATED SECTIONS

A. Section 31 22 00 - Grading: Preparation of site for paving and base.

B. Section 31 23 23 - Fill and Backfill: Compacted subgrade for paving.

C. Section 32 11 23 - Aggregate Base Course: Aggregate base course.

D. Section 33 42 16 - Manholes and Covers: Manholes and Drains, including frames.

E. Section 03 30 00 - Cast-In-Place Concrete: Concrete curbs.

F. Section 32 17 23 – Painted Traffic Marking: Pavement markings.

1.3 REFERENCES

A. ASTM D 946 - Standard Specification for Penetration-Graded Asphalt Cement for Use in Pavement Construction.

1.4 QUALITY ASSURANCE

A. Perform Work in accordance with New York State DOT standard.

B. Mixing Plant: Conform to New York State DOT standard.

C. Obtain materials from same source throughout.

1.5 REGULATORY REQUIREMENTS

A. Conform to New York State DOT standard specifications for paving work on property.

1.6 ENVIRONMENTAL REQUIREMENTS

A. Do not place asphalt when ambient air or base surface temperature is less than 40 degrees F, or surface is wet or frozen.

PART 2 - PRODUCTS

2.1 MATERIALS

A. Asphalt Cement: In accordance with New York State DOT standards.

B. Aggregate for Binder Course: In accordance with New York State DOT standards.

C. Aggregate for Wearing Course: In accordance with New York State DOT standards.

D. Fine Aggregate: In accordance with New York State DOT standards.

E. Mineral Filler: Finely ground particles of limestone, hydrated lime or other mineral dust, free of foreign matter.

F. Primer: In accordance with New York State DOT standards.

G. Tack Coat: In accordance with New York State DOT standards.

2.2 ASPHALT PAVING MIXES AND MIX DESIGN

A. Use dry material to avoid foaming. Mix uniformly.

B. Binder Course: New York State DOT standards.

C. Wearing Course: New York State DOT standards.

D. Submit proposed mix design of each class of mix for review prior to beginning of work.

PART 3 - EXECUTION

3.1 EXAMINATION

A. Verify that compacted subgrade, granular base, and stabilized soil is dry and ready to support paving and imposed loads.

B. Verify gradients and elevations of base are correct.

3.2 BASE COURSE

A. Section 32 11 23 - Aggregate Base Course.

3.3 PREPARATION - PRIMER

A. Apply primer in accordance with New York State DOT standards.

B. Apply primer on aggregate base or subbase at uniform rate of 1/3 gal/sq yd.

C. Apply primer to contact surfaces of curbs.

D. Use clean sand to blot excess primer.

3.4 PREPARATION - TACK COAT

A. Apply tack coat in accordance with New York State DOT standards.

B. Apply tack coat on asphalt or concrete surfaces over subgrade surface at uniform rate of 1/3 gal/sq yd.

C. Apply tack coat to contact surfaces of curbs.

D. Coat surfaces of manhole, catch basin, and access frames with oil to prevent bond with asphalt pavement. Do not tack coat these surfaces.

3.5 PLACING ASPHALT PAVEMENT - DOUBLE COURSE

A. Place asphalt binder course within 24 hours of applying primer or tack coat.

B. Place binder course to compacted thickness as indicated.

C. Place wearing course within two hours of placing and compacting binder course.

D. Place wearing course to compacted thickness as indicated.

E. Install gutter drainage grilles and frames and manhole frames in correct position and elevation.

F. Compact pavement by rolling to specified density. Do not displace or extrude pavement from position. Hand compact in areas inaccessible to rolling equipment.

G. Perform rolling with consecutive passes to achieve even and smooth finish, without roller marks.

3.6 TOLERANCES

A. Flatness: Maximum variation of 1/4 inch measured with 10 foot straight edge.

B. Compacted Thickness: Within 1/4 inch of specified or indicated thickness.

C. Variation from True Elevation: Within 1/2 inch.

3.7 PROTECTION

A. Immediately after placement, protect pavement from mechanical injury for 2 days or until surface temperature is less than 140 degrees F.

END OF SECTION 32 12 16

SECTION 32 12 19 - PAVEMENT RESTORATION OVERLAYS

PART 1 - GENERAL

1.1 SCOPE OF WORK

A. Under this Section of the Specifications the Contractor shall provide all labor, tools, materials, and equipment required to complete the following items of work in accordance with the Drawings and Specifications:

1. Preparation and repair of the existing pavement.

2. Installation of pavement reinforcing fabric.

3. Asphaltic concrete pavement overlay.

4. Sealcoating of designated areas.

1.2 GENERAL REQUIREMENTS

A. The asphaltic concrete pavement overlay shall consist of asphaltic concrete constructed and compacted to a thickness in accordance with the Drawings and Specifications. The lines, grades, and typical pavement section shall be as shown on the Drawings.

B. The Contractor shall visit the site, inform himself of the conditions and make his own estimates of the facilities and difficulties attending the execution of the work prior to submitting his bid.

1.3 RELATED WORK SPECIFIED ELSEWHERE

A. Quality Requirements - See Section 01 40 00.

B. Flexible Pavement - See Section - 32 12 00.

C. Parking and Lane Striping - See Section 32 17 23.

1.4 SUBMITTALS

A Mix Design: The Contractor shall submit, in accordance with Section 32 12 16, Mix Design and Aggregate Gradation for Asphaltic Concrete, and data sheets for Pavement Reinforcing Fabric and Sealcoat. No work shall be performed until approved.

1.5 REGULATORY REQUIREMENTS

A. The work performed under this section shall comply with all the requirements of the latest edition of the New York State Department of Transportation specifications except as amended, modified, or supplemented herein.

1.6 QUALITY ASSURANCE

A. The Owner shall provide and pay for, under separate contract, the services of a qualified, independent testing laboratory to insure that the asphaltic concrete mix designs and in-place densities and thicknesses, and other related work are in compliance with all the provisions of the Specifications. See Section 01 50 00 - Testing Laboratory Services. Any non-compliance due to Contractor error or negligence shall be corrected at Contractor's expense.

B. Reference Standards:

1. Some products and execution are specified in this Section by reference to published specifications or standards of the following (with respective abbreviation used):

a. The American Society for Testing and Materials (ASTM)

PART 2 - PRODUCTS

2.1 TACK COAT

A. Tack coat shall be steam refined pavement asphalt type AC20.

2.2 PAVEMENT REINFORCING FABRIC

A Reinforcing fabric shall be "Petromat" manufactured by Phillips Fibers Corporation, or approved equal.

2.3 ASPHALTIC CONCRETE OVERLAY MATERIAL

A. Asphaltic concrete overlay material shall consist of hot mix, hot-laid asphaltic concrete in accordance with the following:

Sieve Size	Total Percent Passing by Weight
1/2 inch	100
3/8 inch	90- 100
No. 4	45- 75
No. 16	15- 45
No. 50	3- 22
No. 200	0- 8

B. Bitumen content shall be within the following limits as directed by the Owner: PERCENT OF TOTAL MIX - 4.5 TO 12.0 PERCENT.

PART 3 - EXECUTION

33.1 PREPARATION AND REPAIR OF THE EXISTING PAVEMENT

A. Prior to placing the fabric, the existing pavement to receive the tack coat shall be cleaned of all debris and materials such as, but not limited to, litter, leaves, sand, dirt, gravel, water, and vegetation.

B. Cracks between 1/8 inch and 1/4 inch shall be cleaned and filled with AC20. Cracks in excess of 1/4 inch or holes are to be repaired with slurry, cold or hot mix asphalt.

C. Where the existing pavement is uneven or is breaking loose, the unstable pavement shall be removed and replaced with compacted hot mix asphalt.

D. Where the existing pavement is failing, these approximate locations are shown on the Drawings, the failing pavement section shall be removed, the subgrade stabilized as directed by the Owner or testing laboratory, and the pavement section replaced in accordance with Section 02510.

E. The Contractor shall perform grinding of the existing pavement in order to taper the edges of the overlay to meet the existing pavement or utility structure. The grinding shall be 2 inches in depth for a distance of 10 feet, or a sufficient distance as noted on the drawings to maintain positive drainage of the pavement as approved by the Owner.

3.2 INSTALLATION OF PAVEMENT REINFORCING FABRIC

A. Placement of the fabric locations as shown on the drawings, shall be made only under the following conditions:

1. The ambient air temperature is above 50 degrees F and rising.

2. The existing pavement is dry and the pavement temperature is 40 degrees F and rising.

3. No more fabric than can be covered with hot mix overlay that working day shall be placed.

B. The surface area to receive the fabric shall be sprayed with steam refined pavement asphalt type AC20 at a rate of 0.22 - 0.28 gallons residual asphalt per square yard, except at intersections where the application rate, 15 feet before and after each stop line, should be in the range of 0.20 gallons per square yard. The asphalt shall be sprayed with a suitably-metered truck and the truck must have been recently calibrated.

Asphalt tack coat shall be applied no farther in advance of the overlay than the distance, which this Contractor can and is permitted to maintain free of traffic.

C. The fabric shall be overlapped 2 inches - 6 inches at the longitudinal joints and no more than 2 inches at the transverse joints. No joints shall be lapped with more than two layers of fabric. Transverse joints shall be shingled in the direction of the paving to prevent edge pickup by the paver. The fabric shall be neatly cut around each utility cover, etc., which is encompassed in this area of the overlay.

D. The fabric shall be placed into the asphaltic tack coat with a minimum of wrinkles that lap, and broomed or squeegeed to remove any bubbles prior to the tack coat cooling substantially enough so as the fabric will not adhere to it. The equipment for placing the fabric shall be mechanized and capable of handling full rolls of fabric and shall be capable of laying the fabric without forming excessive wrinkles that lap. The test for lapping shall be made by gathering together the fabric in a wrinkle. If the height of the double portion of extra fabric is 1/2 inch or more, the fabric shall be slit to remove the wrinkle and allowed to lie flat. Brooming will maximize fabric contact with the pavement surface. The equipment used to place the fabric is subject to approval by the Owner.

E. To enhance the bond of the fabric with the existing pavement and to smooth out any wrinkles and folds in the fabric, the Contractor may be required to pneumatically roll the fabric after it is placed.

F. Turning of the paving machine or other vehicles should be gradual and shall be kept to a minimum to avoid damage to the membrane. Should equipment tires tend to stick to the fabric during pavement operations, small quantities of asphalt concrete shall be broadcast ahead to prevent pick-up of the fabric.

3.3 INSTALLATION OF ASPHALTIC CONCRETE OVERLAY

A. Asphaltic concrete overlay shall be installed as required to achieve a minimum compacted thickness of 2 inches. The width of the overlay application will be the fabric width plus 4 inches. The temperature of the asphalt mix must be spread in the range of 290 degrees F and 325 degrees F.

3.4 COMPACTION OF ASPHALTIC CONCRETE OVERLAY

A. The mix shall be compacted immediately after placing with a steel-wheeled tandem roller, steel three-wheeled roller, or vibratory roller. Final rolling shall eliminate marks from previous rolling. In areas too difficult for the roller to access, a vibrating plate compactor or hand tamper shall be used to achieve the compaction as specified below.

B. Compaction shall achieve a minimum average density of 95 percent Marshall Design Method (ASTM D1559 50 blows) or 99 percent of control strip density. The surface of the completed pavement shall be checked longitudinally and transversely for smoothness with a 10 foot straight edge. The surface shall not vary more than 1/8 inches in 10 feet. All methods for placement shall conform to the standards in the Department of Transportation Manual for Construction and Material Specifications.

3.5 SEALCOAT

A. Sealcoat shall be applied on the bituminous concrete pavement where indicated on the Drawings. See site Drawings.

B. Sealcoat shall be applied in three coats in accordance with the printed Maintenance, Inc. application specifications.

C. The first two coats shall include sand; the third coat shall include AFR Plus Additive.

3.6 CLEAN-UP

A. Upon completion of the Work, all surplus materials, debris, tools, and equipment shall be removed from the site.

END OF SECTION 32 12 19

SECTION 32 13 13 - PORTLAND CEMENT CONCRETE PAVING

PART 1 - GENERAL

1.1 SECTION INCLUDES

A. Concrete sidewalks, stair steps, and integral curbs.

1.2 RELATED SECTIONS

A. Section 31 22 00 - Grading: Preparation of site for paving and base.

B. Section 31 23 23 - Fill and Backfill: Compacted subbase for paving.

C. Section 33 42 16 - Manholes and Covers: Manholes including frames.

D. Section 32 11 23 - Aggregate Base Course: Compacted aggregate base course.

E. Section 03 20 00 - Concrete Reinforcement.

F. Section 03 30 00 - Cast-in-Place Concrete.

1.3 REFERENCES

A. ACI 211.1 - Standard Practice for Selecting Proportions for Normal, Heavyweight, and Mass Concrete; American Concrete Institute International.

B. ACI 301 - Specifications for Structural Concrete for Buildings; American Concrete Institute International.

C. ACI 305R - Hot Weather Concreting; American Concrete Institute International.

D. ACI 306R - Cold Weather Concreting; American Concrete Institute International.

E. ASTM A 615/A 615M - Standard Specification for Deformed and Plain Billet-Steel Bars for Concrete Reinforcement.

F. ASTM C 33 - Standard Specification for Concrete Aggregates.

G. ASTM C 39/C 39M - Standard Test Method for Compressive Strength of Cylindrical Concrete Specimens.

H. ASTM C 94/C 94M - Standard Specification for Ready-Mixed Concrete.

I. ASTM C 150 - Standard Specification for Portland Cement.

J. ASTM C 173/C 173M - Standard Test Method for Air Content of Freshly Mixed Concrete by the Volumetric Method.

K. ASTM C 260 - Standard Specification for Air-Entraining Admixtures for Concrete.

L. ASTM C 309 - Standard Specification for Liquid Membrane-Forming Compounds for Curing Concrete.

M. ASTM C 685/C 685M - Standard Specification for Concrete Made by Volumetric Batching and Continuous Mixing.

N. ASTM D 1751 - Standard Specification for Preformed Expansion Joint Filler for Concrete Paving and Structural Construction (non-extruding and Resilient Bituminous Types).

O. ASTM D 1752 - Standard Specification for Preformed Sponge Rubber Cork and Recycled PVC Expansion Joint Fillers for Concrete Paving and Structural Construction.

1.4 SUBMITTALS

A. See Section 013 30 00 - Administrative Requirements, for submittal procedures.

B. Product Data: Provide data on joint filler, admixtures, and curing compound.

1.5 QUALITY ASSURANCE

A. Perform work in accordance with ACI 301.

B. Obtain cementitious materials from same source throughout.

C. Follow recommendations of ACI 305R when concreting during hot weather.

D. Follow recommendations of ACI 306R when concreting during cold weather.

1.6 ENVIRONMENTAL REQUIREMENTS

A. Do not place concrete when base surface temperature is less than 40 degrees F, or surface is wet or frozen.

PART 2 - PRODUCTS

2.1 FORM MATERIALS

A. Form Materials: Conform to ACI 301.

B. Joint Filler: Preformed; non-extruding bituminous type (ASTM D 1751) or sponge rubber or cork (ASTM D 1752).
   1. Thickness: 1/2 inch.

2.2 REINFORCEMENT

A. Reinforcing Steel and Welded Wire Reinforcement: Types specified in Section 03 20 00.

B. Dowels: ASTM A 615/A 615M Grade 60 (420); deformed billet steel bars; unfinished finish.

2.3 CONCRETE MATERIALS

A. Cement: ASTM C 150 Air Entraining - Type IA Portland type, grey color.

B. Fine and Coarse Mix Aggregates: ASTM C 33.

C. Water: Clean, and not detrimental to concrete.

D. Air Entrainment Admixture: ASTM C 260.

2.4 ACCESSORIES

A. Curing Compound: ASTM C 309, Type 1, Class A.

2.5 CONCRETE MIX DESIGN

A. Proportioning Normal Weight Concrete: Comply with ACI 211.1 recommendations.

B. Concrete Strength: Establish required average strength for each type of concrete on the basis of field experience or trial mixtures, as specified in ACI 301.
   1. For trial mixtures method, employ independent testing agency acceptable to Architect/Engineer for preparing and reporting proposed mix designs.

C. Admixtures: Add acceptable admixtures as recommended in ACI 211.1 and at rates recommended by manufacturer.

D. Concrete Properties:
   1. Compressive Strength, when tested in accordance with ASTM C 39/C 39M at 28 days: 4,000 psi.
   2. Water-Cement Ratio: Maximum 40 percent by weight.
   3. Total Air Content: 6 percent, determined in accordance with ASTM C 173/C 173M.
   4. Maximum Slump: 4 inches.
   5. Maximum Aggregate Size: 3/4 inch.

2.6 MIXING

A. On Project Site: Mix in drum type batch mixer, complying with ASTM C 685. Mix each batch not less than 1-1/2 minutes and not more than 5 minutes.

B. Transit Mixers: Comply with ASTM C 94/C 94M.

PART 3 - EXECUTION

3.1 EXAMINATION

A. Verify compacted granular base is acceptable and ready to support paving and imposed loads.

B. Verify gradients and elevations of base are correct.

3.2 SUBBASE

A. See Section 32 10 00 for construction of base course for work of this Section.

3.3 PREPARATION

A. Moisten base to minimize absorption of water from fresh concrete.

B. Coat surfaces of catch basin frames with oil to prevent bond with concrete pavement.

C. Notify Architect/Engineer minimum 24 hours prior to commencement of concreting operations.

3.4 FORMING

A. Place and secure forms to correct location, dimension, profile, and gradient.

B. Assemble formwork to permit easy stripping and dismantling without damaging concrete.

C. Place joint filler vertical in position, in straight lines. Secure to formwork during concrete placement.

3.5 REINFORCEMENT

A. Place reinforcement at mid-height of slabs-on-grade and as indicated on drawings.

B. Interrupt reinforcement at contraction and expansion joints.

C. Place reinforcement to achieve pavement and curb alignment as detailed.

3.6 PLACING CONCRETE

A. Place concrete as specified in Section 03 30 00.

B. Ensure reinforcement, inserts, embedded parts, formed joints are not disturbed during concrete placement.

C. Place concrete continuously over the full width of the panel and between predetermined construction joints.

D. Place concrete to pattern indicated.

3.7 JOINTS

A. Align curb and sidewalk joints.

B. Place 3/8 inch wide expansion joints at 10 foot intervals or as indicated on drawings and to separate paving from vertical surfaces and other components and in pattern indicated.
   1. Form joints with joint filler extending from bottom of pavement to within 1/4 inch of finished surface.
   2. Secure to resist movement by wet concrete.

C. Provide scored joints:
   1. At 4 feet intervals.

2. Between sidewalks and curbs.
3. Between curbs and pavement.

D. Provide keyed joints as indicated.

E. Saw cut contraction joints 3/16 inch wide at an optimum time after finishing. Cut 1/3 into depth of slab.

3.8 FINISHING

A. Sidewalk Paving: Light broom, texture perpendicular to direction of travel with troweled and radiused edge 1/4 inch radius.

B. Curbs: Light broom, texture parallel to pavement direction.

C. Place curing compound on exposed concrete surfaces immediately after finishing. Apply in accordance with manufacturer's instructions.

3.9 TOLERANCES

A. Maximum Variation of Surface Flatness: 1/4 inch in 10 ft.

B. Maximum Variation from True Position: 1/4 inch.

3.10 FIELD QUALITY CONTROL

A. An independent testing agency will perform field quality control tests, as specified in Section 01 45 23.
   1. Provide free access to concrete operations at project site and cooperate with appointed firm.
   2. Submit proposed mix design of each class of concrete to inspection and testing firm for review prior to commencement of concrete operations.
   3. Tests of concrete and concrete materials may be performed at any time to ensure conformance with specified requirements.

B. Compressive Strength Tests: ASTM C 39/C 39M. For each test, mold and cure three concrete test cylinders. Obtain test samples for every 75 cu yd or less of each class of concrete placed.
   1. Take one additional test cylinder during cold weather concreting, cured on job site under same conditions as concrete it represents.
   2. Perform one slump test for each set of test cylinders taken.

3.11 PROTECTION

A. Immediately after placement, protect pavement from premature drying, excessive hot or cold temperatures, and mechanical injury.

B. Do not permit pedestrian traffic over pavement for 7 days minimum after finishing.

END OF SECTION 32 13 13

SECTION 32 17 23 - PAINTED TRAFFIC MARKINGS

PART 1 – GENERAL

1.1 DESCRIPTION

A. The Work under this Section includes providing all labor, materials, tools and equipment necessary for furnishing and placing painted traffic markings as shown on the Drawings.

B. Details not shown on the Drawings shall be in conformity with the latest edition of the Manual of Uniform Traffic Control Devices (MUTCD).

C. This Work shall also include re-striping all paint markings to their original conditions, if damaged by the Contractor's operations.

PART 2 – PRODUCTS

2.1 MATERIAL

A. White and yellow traffic marking paint shall be methyl methacrylate and conform to AASHTO M 248, Type F.

B. Blue marking paint shall match CBJ Street Department disability blue marking paint.

C. Glass spheres (when called for on the drawings) for reflectorizing traffic paint shall conform to AASHTO M 247, Type I, and shall be supplied by a moisture resistant coating.

PART 3 – EXECUTION

3.1 GENERAL

A. Lines shall be applied as solid, dashed or dotted stripes, either singly or in combination, as shown on the Drawings. Dashed lines shall be applied in a 40 foot cycle consisting of a ten foot dash and a 30 foot gap between dashes, unless otherwise shown on the Drawings. The Contractor shall use an accurate dashing mechanism, which is capable of being easily adjusted to retrace existing dashed markings or to apply new materials at the correct spacing. Dashed lines which are to be applied over plainly visible existing dished lines shall begin within six inches of the beginning of the existing dash, unless otherwise directed by the Engineer.

B. Gaps not marked as a result of template use for spray-applied auxiliary markings shall be filled with marking material after template removal. Pavement markings shall be free of uneven edges, overspray, or other readily visible defects which detract from the appearance or function of the pavement markings.

C. Lines shall be sharp, well defined, and uniformly retroreflective. The width of the applied shall be the width specified plus or minus ¼ -inch. Fuzzy lines, excessive overspray, or non-uniform applications are unacceptable

D. Pavement markings which are improperly applied, located, or reflectorized shall be corrected. Lines applied with insufficient material quantities shall be properly reapplied. Improperly located lines shall be removed. New lines shall then be applied in the correct locations at the Contractor's expense, including the furnishing of approved materials.

E. Methods and equipment used for pavement preparation, marking removal shall be subject to the approval of the Engineer. Glass beads shall be kept dry during storage and prior to use.

F. Other construction Work, such as shoulder paving, topsoil placement and grading, and seeding, shall be scheduled and performed in a manner to avoid damage to applied pavement markings.

G. Pavement marking materials shall not be applied to the reflector of a recessed pavement marker. The Contractor shall interrupt the application of the pavement marking line at each recessed pavement marker where marking material would otherwise be applied to the marker prismatic reflector. The maximum gap in the marked line at each marker shall be 18-inches. Pavement marking material applied to a prismatic reflector surface shall be removed by the Contractor, or the reflector shall be replaced at his expense the same working day. When the Contractor must most remove material from the reflector, the reflector's brightness shall be restored to its prior condition.

3.2 PAVEMENT PREPRARATION

A. The Contractor shall clean all visible loose or foreign material from the surface to be marked. The pavement marking equipment shall be equipped with an air jet to remove all debris from the pavement in advance of the applicator gun. The air jet shall operate when marking material is being applied and be synchronized with marking material application.

B. Pavement markings shall be applied only when the surface is clean and dry. The Contractor shall power broom clean all surfaces where edge lines are to be applied. When required by the Engineer, other surfaces shall also be power broom cleaned.

C. Marking shall not be applied to Portland cement concrete until the concrete in the areas to be marked is clean of membrane curing material and is dry.

3.3 LAYOUT AND PREMARKING

A. The Contractor shall lay out the locations of all lines, words and other symbols to assure their proper placement. When applying longitudinal or transverse lines, the Contractor shall use existing lines, construction joints or premarking to guide this marking equipment.

B. Premarking shall be located from survey data or reference points and offset so as to parallel the theoretical edge of the marking lines at a maximum distance of one inch. Templates are required for the layout of arrows, words and other symbols. Premarking for longitudinal lines shall be placed at 40-foot intervals, and shall not exceed two inches in width or 12 inches in length. Premarking for auxiliary markings shall be located as shown on the Drawings.

3.4 LINE PLACEMENT TOLERANCE

A. Pavement marking lines shall be straight or smoothly curved, true to the alignment of the pavement, and shall not deviate laterally from the proper location at a rate of more than two inches in 100 feet. No deviation greater than three inches will be permitted.

3.5 LINE TYPES

A. Marking materials shall be applied at a minimum rate of 16.5 gallons per mile per four inch wide stripe, with a 20 mill minimum thickness, and shall, except for parking lot stall markings, be uniformly retroreflective. The minimum rate of application for broken traffic stripes shall be prorated.

B. Edge lines shall be continuous stripes, four inches in width. Center of stripe shall be located as shown on the Drawings.

C. Lane lines shall be four inch wide white stripes between contiguous lanes of pavement carrying traffic in the same direction. They shall be dashed unless specified solid. They shall be offset to the left of the longitudinal joint, if present, or the theoretical line lying between contiguous lanes, if a joint is not present. The nearer edge of the stripe shall be two inches to the left of the joint or line.

D. Centerlines shall be single or double yellow stripes between contiguous lanes of pavement carrying traffic in opposite directions. Centerline marking shall also include two way left-turn lane striping and the outline of left-turn island. Each stripe shall be four inches wide, sold or dashed.

E. Channelizing lines shall be continuous white stripes, eight inches wide.

F. Stop lines shall be solid white strips, 24-inches wide. Crosswalk lines shall be sold white strips, 24 inches wide.

G. Parking lot stall marking lines shall be continuous white stripes, four inches in width.

H. Lane arrows and letters shall be white markings, with a minimum rate of application of 0.01 gallon per square foot of markings.

3.6 EQUIPMENT AND APPLICATION OF PAINTED TRAFFIC MARKINGS

A. The markings shall be applied by machine methods acceptable to the Engineer. The paint machine shall be of the spray type capable of satisfactorily applying the paint under pressure with uniformity of feed through nozzles spraying directly upon the pavement. Each machine shall be capable of applying two separate stripes, either solid or skip, at the same time. Each paint tank shall be equipped with a mechanical agitator. Each nozzle shall be equipped with satisfactory cutoff valves which will apply broken or skip lines automatically. Each nozzle shall have a mechanical bead dispenser that will operate simultaneously with the spray nozzle and distribute the beads in a uniform pattern at the rate specified. Each nozzle shall also be equipped with suitable line guides consisting of metallic shrouds or air blasts.

B. The paint shall be thoroughly mixed prior to application, and shall be applied when the

air temperature is above 40 F and rising, to a clean and dry surface.

C. Glass beads shall be applied at a minimum rate of 5.5 pounds of beads for each gallon of paint.

D. The painted area shall be protected from traffic until the paint is thoroughly dry.

3.7 REMOVAL OF PAVEMENT MARKINGS

A. When indicated on the Drawings, pavement markings shall be removed. The markings shall be removed by high-pressure water blast, sand blast, high temperature burning with excess oxygen, or other methods, with the approval of the Engineer. Care shall be exercised during marking removal not to scar, discolor or otherwise damage the pavement surface. Overpainting or other methods of covering markings in lieu of removal shall not be permitted.

END OF SECTION 32 17 23

SECTION 32 31 29 - FENCES AND GATES (POLYVINYLCHLORIDE AND WOOD)

PART 1 - GENERAL

1.1 SUMMARY

A. Under this Section of the Specifications the Contractor shall furnish all labor and materials required to complete the following items of work in accordance with the Contract Drawings and Specifications:

1. Install new exterior fence and gates where indicated on the Drawings. All materials shall be new, unless noted otherwise.

2. Install PVC vertical slats, cross braces, posts, wood vertical board slats, hardware cross braces, galvanized nails, bolts and lag bolts with washers on exterior fence.

3. See Details on Contract Drawings.

1.2 GENERAL REQUIREMENTS

A. The Contractor shall visit the site, inform himself of the conditions, and make his own estimates of the facilities and difficulties attending the execution of the work prior to submitting his bid.

1.3 RELATED WORK SPECIFIED ELSEWHERE

A. Earthwork - See Division 31.

B. Concrete - See Division 03.

C. Electrical - See Division 26.

1.4 SUBMITTALS

A. Shop Drawings: The Contractor shall submit, in accordance with Section 01 33 00, detailed Shop Drawings for all fence work. Details shall be complete indicating fence height, gate details, security mesh fabric, chain link fabric, razor wire, size of posts, rails, braces, etc.

1.5 QUALITY ASSURANCE

A. All materials shall be in accordance with the latest edition of the applicable provisions of the American Society for Testing Materials (ASTM).

PART 2 - PRODUCTS

2.1 FABRIC

A. General: Aluminum coated steel fabric, No. 9 wire woven in a mesh. The fabric shall conform to ASTM A491 in its entirety. Aluminum coating shall be a minimum of 0.40 ounces per square foot of wire surface.

B. Security Mesh Fabric for Exterior Fence: Woven in a 3/8 inch mesh. Fabric height shall be 8 feet beginning at finished grade.

C. Chain Link Fabric for Exterior Fence: Woven in a 2 inch mesh. Fabric height shall be 8 feet beginning at top of security mesh fabric.

D. Chain Link Fabric for Interior Fence: Woven in a 2 inch mesh. Fabric height shall be as indicated on drawings.

2.2 POSTS, RAILS, AND BRACES

A. All pipe shall be "Standard Weight" (Schedule 40) and comply with provisions of ASTM A120 for weight and coating. All roll formed shapes shall conform to provisions of ASTM A123 for galvanized coating.

B. End, corner, and pull posts shall be 2-7/8 inches o.d. pipe, 5.79 lbs. per lineal foot (raw weight). Line posts shall be 2-3/8 inches o.d. pipe, 3.65 lbs. per lineal foot (raw weight). Gate posts shall be as follows:

1. Gate leaves up to and including 6 feet wide shall be 2-7/8 inches o.d. pipe, 5.79 lbs. per lineal foot (raw weight).

2. Gate leaves over 6 feet and up to and including 12 feet wide shall be 4 inch o.d. pipe, 9.11 lbs. per lineal foot (raw weight).

3. Gate leaves over 12 feet and up to and including 18 feet wide shall be 6-5/8 inches o.d. pipe, 18.97 lbs. per lineal foot (raw weight).

4. Gate leaves over 18 feet wide shall be 8-5/8 inches o.d. pipe, 28.55 lbs. per lineal foot (raw weight).

C. Top rail shall be 1-5/8 inches o.d. pipe, weighing 2.27 lbs. per lineal foot (raw weight).

D. Bottom tension wire shall be No. 7 aluminum coated coiled spring wire to match fabric. Minimum weight of aluminum coating shall be 0.40 ounces per square foot of wire surface.

E. Post bracing assembly shall be 1-5/8 inches o.d. pipe, weighing 2.27 lbs. per lineal foot (raw weight) for horizontal braces and 3/8 inch diameter rod with adjustable take-up for diagonal truss.

F. Provide all required accessories (post caps, top rail couplings, stretcher bars and bands, etc.) necessary for a complete installation.

2.3 SWINGING GATES

A. Provide 4 foot wide man gates and double leaf swinging vehicle gate as shown on the Drawings. Design and construct of heavy duty galvanized materials as specified herein. Fabric shall match the fence.

B. Fabricate gate perimeter frames of 1.90 inches o.d., 2.72 lbs. per lineal foot (raw weight), tubular members. Provide additional horizontal and vertical members to ensure proper gate operation and for attachment of fabric, hardware, and accessories.

C. Assemble gate frames by welding connections. Use same fabric as for fence, unless otherwise indicated. Install fabric with stretcher bars at vertical edges, and tie wires at top and bottom edges. Attach stretcher bars to gate frame at not more than 15 inches o.c. Attach hardware with rivets or by other means which will provide security against removal or breakage.

D. Provide diagonal cross-bracing consisting of 3/8 inch diameter adjustable length truss rods on gates where necessary to provide frame rigidity without sag or twist.

E. Provide the following hardware and accessories for each gate:

1. Hinges: Pressed steel or malleable iron to suit gate size, non-lift-off type, offset to permit greater than 180 degree gate opening. See Drawings for required swing. Provide one pair of hinges for each leaf.

2. Latch: Forked type of plunger bar type to permit operation from either side of gate. Provide padlock eye as integral part of latch.

3. Double Gates: Provide gate stops for all double gates, consisting of mushroom type or flush pate and anchors. Set in concrete to engage the center drop rod of plunger bar. Provide locking device and padlock eyes as an integral part of the latch, requiring one padlock for locking both gate leaves.

2.4 HORIZONTAL ROLLING GATES

A. Horizontal rolling gates shall a minimum of 34 feet wide to provide clearance for the 30 feet wide drive. Gates shall be overhead track type. Gates shall be electrically operated where indicated.

B. Gate shall be constructed from heavy-duty galvanized steel materials and fitted with same fabric as for fence, unless otherwise indicated. All joints shall be welded.

C. Overhead track shall be a heavy-duty, enclosed type. Track and supporting structure shall provide 16’-0” clearance to the pavement.

D. Hangers shall be sealed, ball bearing type designed for exterior, high frequency use.

E. Operator shall be 120/1/60. Furnish with a remote control station mounted in the Guard Area.

PART 3 - EXECUTION

3.1 INSTALLATION

A. General: Install fence in compliance with ASTM F 567. Do not begin installation and erection before final grading is completed, unless otherwise permitted.

B. Excavation: Drill or hand excavate (using post hole digger) holes for post to diameters and spacings indicated, in firm, undisturbed, or compacted soil:

1. Unless otherwise indicated, excavate hole depths approximately 3 inches lower than post bottom, with bottom of posts set not less than 36 inches below finish grade surface.

2. Foundations for sliding gate support framing shall be adequate for the gate size and be indicated on the Shop Drawings.

C. Setting Posts: Center and align posts in holes 3 inches above bottom of excavation. Space maximum 10 feet o/c., unless otherwise indicated.

1. Protect portion of posts above ground from concrete splatter. Place concrete around posts and vibrate or tamp for consolidation. Check each post for vertical and top alignment and hold in position during placement and finishing operations.

2. Unless otherwise indicated, extend concrete footings 1-1/2 inches above grade and trowel to a crown to shed water.

D. Top Rails: Run rail continuously through line post caps and at other posts terminating into rail end attached to posts or post caps fabricated to receive rail. Provide expansion couplings as recommended by fencing manufacturer.

E. Brace Assemblies: Install braces so posts are plumb when diagonal rod is under proper tension.

F. Bottom Tension Wire: Install tension wire within 6 inches of bottom of fabric before stretching fabric and tie to each post with not less than same gauge and type of wire. Pull wire taut, without sags. Fasten fabric to tension wire with 11 gauge hog rings of same material and finish as fabric wire, spaced maximum 24 inches o.c.

G. Fabric: Leave a maximum of 2 inches between finish grade or floor and bottom selvage unless otherwise indicated. Pull fabric taut and tie to posts, rails, and tension wires. Install fabric on security side of fence, and anchor to framework so that fabric remains in tension after pulling force is released.

H. Tension or Stretcher Bars: Thread through or clamp to fabric 4 inches o.c. and secure to end, corner, pull, and gate posts with tension bands spaced not over 15 inches o.c.

I. Tie Wires: Use U-shaped wire of proper length to secure fabric firmly to posts and rails with ends twisted at least two full turns. Bend ends of wire to minimize hazard to persons or clothing.

Maximum Spacing: Tie fabric to line posts 12 inches o.c. and to rails and braces 24 inches o.c.

J. Fasteners: Install nuts for tension bands and hardware bolts on side of fence opposite fabric side. Peen ends of bolts or score threads to prevent removal of nuts.

K. Gates: Install gates plumb, level, and secure for full opening without interference. Install ground-set items in concrete for anchorage. Adjust hardware for smooth operation and lubricate where necessary.

L. Razor Wire: Install securely to top rails and to end post or terminal arms in accordance with manufacturer's instructions.

3.2 CLEAN-UP

A. Upon completion of the Work, all surplus materials, debris, tools, and equipment shall be removed from the site.

END OF SECTION 32 31 29

SECTION 32 80 00 - IRRIGATION SYSTEM

PART 1 - GENERAL

1.1 DESCRIPTION:

A. Provide an underground irrigation system in accordance with these specifications and as shown on the approved Irrigation Design Drawing prepared by Contractor. Work includes:

1. Design and installation of automatic irrigation system including piping, fittings, sprinkler heads, valves, and accessories.

2. Irrigation controller, controller wire, and rain switch,

3. Pipe sleeves.

4. Excavating and backfilling irrigation system work.

5. Associated plumbing and accessories to complete the system.

6. System testing.

7. System maintenance until Substantial Completion and thereafter as specified.

8. Installation of the following items and coordination with the General Contractor:

a. Water tap and separate water meter and backflow preventer for irrigation system.
b. Provision for electric power for the irrigation controller.

B. Related Sections:

1. Division 31 – Earthwork

2. Section 32 92 19 – Seeding and Soil Supplements

1.2 QUALITY ASSURANCE

A. Comply with relevant specifications in Division 32, as well as other divisions.

B. Installer's qualifications: Minimum of 5 years experience installing irrigation systems of comparable size.

C. Materials, equipment, and methods of installation shall comply with the following:

1. Appropriate local and state codes and standards.

2. National Fire Protection Association (NFPA): National Electric Code.

3. American Society for Testing and Materials (ASTM).

4. National Sanitation Foundation (NSF).

5. The Irrigation Association (IA).

D. Excavating, backfilling, and compacting operations: Comply with Section 02300 requirements and as specified.

1.3 SUBMITTALS

A. Submit a complete, detailed Irrigation Design drawing for the irrigation system. This drawing, upon review and approval, will become part of the Contract Documents. Include location of water tap and backflow preventer, piping layout and sizing, location and type of sprinkler heads, valves (numbered, with GPM rates), controller and electrical service, and a complete schedule of parts and fittings.

1. System shall be designed for head-to-head coverage, with capability for 1” water/hour coverage. Coverage area includes:

a. All tree planting areas.
b. Plant and ground cover areas.
c. Fine lawn areas.

2. Keep walks and paved areas dry.

3. Indicate sprinkler head coverage on Design Drawing. Indicate hydrostatic water pressure on Design Drawing.

4. Piping must be laid out to avoid roots of new trees. This configuration may result in extra pipe and trenching costs.

5. Location of water tap and meter is as indicated on the drawings.

6. Verify exterior location of irrigation controller with the Owner. Coordinate with General Contractor for location of 110V electric service.

B. Submit manufacturer’s product data and installation instructions for each of the system components.

C. Submit written documentation of time, date, and results of pressure test.

D. Upon irrigation system acceptance, submit written operation and maintenance instructions, including winterization procedure.

E. Provide a Record Drawing of irrigation system:

1. Prepare a hard-line drawing to record actual construction. Include all information indicated on original approved Contractor’s Design Drawing, for complete delineation of system.

2. Identify field layout changes and changes made by Change Order.

1.4 DELIVERY, STORAGE, AND HANDLING

A. Deliver irrigation system components in manufacturer's original undamaged and unopened containers with labels intact and legible.

B. Deliver plastic piping in bundles, packaged to provide adequate protection of pipe ends, both threaded or plain.

C. Store and handle materials to prevent damage and deterioration.

D. Provide secure, locked storage for valves, sprinkler heads, and similar components that cannot be immediately replaced, to prevent installation delays.

1.5 PROJECT CONDITIONS

A. Known underground utility lines are indicated on Contract Documents.

B. Promptly repair damage to adjacent facilities caused by irrigation system work operations. Cost of repairs at Contractor's expense.

C. Promptly notify the project Civil Engineer of unexpected sub-surface conditions.

D. Any deviations between Contractor's Design Drawing and actual construction of irrigation system must by approved by the Civil Engineer. Final system layout shall be acceptable to Civil Engineer.

1.6 WARRANTY

A. Provide one-year warranty from date of system acceptance. Warranty shall include replacement of all defective materials and workmanship.

PART 2 - PRODUCTS

2.1 ACCEPTABLE MANUFACTURERS

A. Manufacturer: The Toro Company; Irrigation Division; Riverside, California.

B. Other acceptable manufacturers:

1. Rainbird Sprinkler Manufacturing Company; Glendora, California.

2. Hunter Industries (gear driven sprinklers); San Marcos, California.

2.2 MATERIALS

A. General:

1. Provide only new materials, without flaws or defects and of the highest quality of their specified class and kind.

2. Comply with pipe sizes indicated. No substitution of smaller pipes will be permitted. Larger sizes may be used subject to acceptance of the Landscape Architect. Remove damaged and defective pipe.

3. Provide pipe continuously and permanently marked with manufacturer's name or trademark, size schedule and type of pipe, working pressure at 73 degrees F and National Sanitation Foundation (NSF) approval.

B. Plastic pipe, fittings, and connections:

1. Polyvinyl chloride pipe: ASTM D2241, rigid, unplasticized PVC, extruded from virgin parent material. Provide pipe homogeneous throughout and free from visible cracks, holes, foreign materials, blisters, wrinkles, and dents.

   a. Main line pipe and sleeving: Schedule 40, ASTM D1785.
   b. Lateral line pipe: Class 200, ASTM D2241.

2. PVC pipe fittings: ASTM D2241 Schedule 40 PVC molded fittings suitable for solvent weld, screwed connections. Fittings made of other materials are not permitted.

3. Solvent cements for PVC pipe and fittings: ASTM D2564 standard specification, and ASTM D2855 Standard Recommended Practices for Making Solvent Cemented Joints for PVC Pipe and Fittings.

4. Sprinkler and rotor head connections: ASTM D2239 flexible 3/8" polyethylene pipe, with ASTM D2609 plastic insert fittings.

C. Sprinkler heads:

1. Rotary type sprinkler heads shall be pop-up type with screens, fully adjustable for flow and pressure. Refer to Contractor's Design Drawing for spray pattern.

2. Spray type sprinkler heads shall be pop-up type with screens, fully adjustable for flow and pressure. Refer to Contractor's Design Drawing for spray pattern.

D. Valves:

1. Gate valves: bronze construction, non-rising stem, inside screw with threaded ends. Refer to Contractor's Design Drawing for size and other requirements.

2. Automatic Drain Valves: ½" male pipe thread inlet, plastic body, opening pressure 2-3 PSI, closing pressure 4-6 PSI.

E. Controller(s):

1. Automatic controller, microprocessor solid state with visible readout display and temporary override feature to bypass cycle for inclement weather. Timer to include the number of stations indicated on Contractor's Design Drawing, programmable for 7 to 14 days, in .10 and .25 hour increments, with automatic start and shutdown.

F. Electrical control wire:

1. Electrical control and ground wire: Type UF 600 volt AWG control cable #14 or larger. Aluminum wire is not acceptable.

2. Wire color code: Provide control or 'hot' wires either black or red in color. Provide common or 'ground' wires in white color.

G. Water line tap and water meter:

1. In accordance with local and applicable codes and as indicated on Contractor's Design Drawing.

H. Back flow preventer and cover:

1. Double check valve reduced pressure zone type. Refer to American Water Works Association (AWWA) C506: *Back Flow Prevention Devices Reduced Pressure Principle and Double Check Valve Types*. Cover to be constructed of rigid insulated fiberglass, dark green color, secured to base as approved.

I. Quick coupler valve (if specified):

1. Manual valve and key assembly allowing connection and operation of a single sprinkler head of hose from the irrigation mainline. Quick coupler valve to have metal lid, mounted in a 12" round plastic valve box. For each quick coupler valve, provide (1) quick coupler key with 6 GPM full circle brass impact sprinkler head, or (1) ¾" brass hose swivel (as indicated on Contractor's Design Drawing).

2.3 ACCESSORIES

A. Drainage fill: ½" to ¾" washed pea gravel (only as required).

B. Fill: Clean soil free of stones larger than 2" diameter, foreign matter, organic material, and debris.

1. Provide imported fill material as required to complete work. Obtain rights and pay all costs for imported material.

2. Suitable excavated materials removed to accommodate the irrigation system work may be used a fill material subject to the Landscape Architect's review and acceptance.

C. Low voltage wire connectors: Socket seal type wire connectors and waterproof sealer.

D. Valve access boxes: Constructed of rigid, durable plastic with plastic cover plate, manufactured by "Amtec" (or equal). Refer to Contractor's design Drawing for size of valve access box.

PART 3 - EXECUTION

3.1 APPROVAL OF CONTRACTOR'S DESIGN DRAWING

A. Do not commence work until Contractor's Design Drawing is approved in writing by the Civil Engineer.

3.2 INSPECTION

A. Examine final grades and installation conditions. Do not start irrigation system work until unsatisfactory conditions are corrected.

3.3 PREPARATION

A. Layout and stake the location of each pipe run and all sprinkler heads and sprinkler valves.

B. Sleeves:

1. Provide sleeves for all locations indicated on approved Contractor's Design Drawing, and in general where pipe and controller wire is under paved surfaces, curbs, walls, steps, ramps, etc. Where piping is shown under paved areas that are adjacent to turf areas, install the piping in the turf areas.

2. Install piping sleeves before paved surfaces are installed.

3. Entire operation to be carried out in such manner to prevent settlement of overhead soils or pavements, and to forestall present or future damage to any overhead improvements.

3.4 INSTALLATION

A. Excavation and backfilling:

1. All excavation shall be considered unclassified excavation and include all materials encountered.

2. Excavate trenches of sufficient depth and width to permit proper handling and installation of pipe and fittings.

3. If the pulling method is used, the pipe "plow" shall be a vibratory type. Starting and finishing holes for pipe pulling shall not exceed a 1'-0" by 3'-0" opening.

4. Excavate to depths required to provide 2" depth of earth fill or sand bedding for piping when rock or other unsuitable bearing materials is encountered.

5. Fill to match adjacent grade elevations with approved earth fill material. Allow for settling. Place and compact fill in layers not greater than 8" depth.

a. Provide approved earth fill or sand to a point 4" above the top of pipe.

b. Fill to within 6” of final grade with approved excavated or borrow fill materials free of lumps or rocks larger than 3 “ in any dimension.
c. Provide clean topsoil fill free of rocks and debris for top 6” or fill.

6. Restore any settled trenches to finished grade, including the necessary restoration and/or replacement of grass sod, plant materials, and mulch.

7. Provide 1 cu. ft. of drainage fill aggregate around each pop-up impact type of sprinkler head to permit drainage of water from the sprinkler case. Top of aggregate to be 4” below finished grade, with soil on top (only if so indicated on Contractor’s Design Drawing).

8. Install irrigation lines with a minimum cover of 18” to 24” based on finished grades. If trenching encounters obstructions, cease work immediately and notify Owner.

9. Excavate trenches and install piping and fill during the same working day. Do not leave open trenches or partially filled trenches open overnight.

B. Plastic pipe:

1. Install plastic pipe in accordance with manufacturer’s installation instructions. Provide for thermal expansion and contraction.

2. Saw cut plastic pipe. Use a square-in-saw vice, to ensure a square cut. Remove burrs and shavings at cut ends prior to installation.

3. Make plastic to plastic joints with solvent weld joints recommended by the pipe manufacturer. Install plastic pipe fittings in accordance with pipe manufacturer’s instructions. Contractor shall make arrangements with pipe manufacture for all necessary field assistance.

4. Make plastic to metal joints with plastic male adapters.

5. Make solvent weld joints in accordance with manufacturer’s recommendations.

6. Allow joints to set at least 24 hours before pressure is applied to the system.

7. Maintain pipe interiors free of dirt and debris. Close open ends of pipe by acceptable methods when pipe installation is not in progress.

C. Sprinklers, fittings, valves, and accessories:

1. Install fittings, valves, sprinkler heads, risers, and accessories in accordance with manufacturer’s instructions, except as otherwise indicated.

a. Provide concrete thrust blocks where required at fittings and valves.

2. Set sprinkler heads perpendicular to finished grades, except as otherwise indicated. Set top of sprinkler head flush with adjacent grade of soil or mulch layer.

3. Install pop-up spray heads and gear driven sprinklers with a flexible 3/8” polyethylene pipe connection to lateral line; using standard insert elbows.

4. Locate sprinkler heads to assure proper coverage of indicated areas. Do not exceed sprinkler head spacing distances indicated.

5. Connect quick coupler valve (if specified) to main line with PVC ‘O’ ring type triple swing joint, stabilized with ½” metal rod and galvanized clamp stabilizers. Install in 12” round plastic valve box, filled with pea gravel. Valve to be centered in box and 4” below top.

6. Install fittings and accessories as shown or required to complete the system.

7. Install in-ground control valves in a flush mounted valve access box as indicated.

8. Install valve access boxes on a suitable base on gravel (6” minimum thickness) to provide a level foundation at proper grade and to provide drainage of the access box.

9. Seal threaded connections on pressure side of control valves with Teflon tape or approved plastic joint type compound.

D. Controller and control wiring:

1. Install controller as indicated on Contractor’s Design Drawing and as approved by Civil Engineer, including connection to 110 V service.

2. Install electric control cable in the piping trenches wherever possible. Install wire with slack to allow for thermal expansion and contraction. Expansion joints in wire may be provided at 200-foot intervals by making 5-6 turns of the wire around a piece of 1/2” pipe instead of slack. Where necessary to run wire in a separate trench, provide a minimum cover of 12".

3. Provide sufficient slack at all connection, valves and at ends of wire terminators, and at all wire splices to allow raising the valve bonnet or splice to the surface without disconnecting the wires when repair is required.

4. Connect each remote control valve to one station of the controller, unless otherwise indicated. Maintain the valve number and numerical sequence of each valve zone as indicated on Contractor’s Design Drawing.

5. Connect remote control valves to a common ground wire system.

6. Make wire connections to remote control electric valves and splices of wire in the field, using wire connectors and sealing cement in accordance with manufacturer’s recommendations.

7. Provide water tight splice connections to prevent leakage of voltage and corrosion build-up at the splice.

E. Backflow preventer:

1. Install in location indicted on Contractor's Design Drawing, and as approved by Civil Engineer. Coordinate location with other proposed improvements such as screen planting or other landscape work.

2. Install protective cover, in approved dark color. Secure cover at ground level in a manner acceptable to the Civil Engineer.

F. Water Line Tap and Water Meter:

1. Install water meter in location on Contractor's Design Drawing, including connection to water line. Reimburse local utility for all costs and fees.

G. Flushing, testing, and adjustment:

1. After sprinkler piping and risers are installed and before sprinkler heads are installed, open control valves and flush out system with full head of water.

2. Perform system testing upon completion of entire main line. Make necessary repairs and retest repaired sections as required. System shall evidence no leakage or pressure loss during a one hour, 100 PSI pressure test. Submit written documentation of time, date, and results of pressure test to Civil Engineer.

3. Adjust sprinklers after installation for proper and adequate distribution of the water over the coverage pattern. Adjust for the proper arc of coverage.

4. Tighten nozzles on spray type sprinklers after installation. Adjust sprinkler-adjusting screw on lateral line or circuit as required for proper radius.

5. Adjust all electric remote control valve pressure regulators and flow control stems for system balance and optimum performance.

6. Test and demonstrate the controller by operating appropriate day, hour, and station selection features as required to automatically start and shut down irrigation cycles to accommodate plant requirements and weather conditions.

3.5 SPARE PARTS

A. Not required in this Contract.

3.6 DISPOSAL OF WASTE MATERIAL

A. Stockpile, haul from site, and legally dispose of waste materials, including unsuitable excavated materials, rock, trash, and debris.

B. Maintain disposal route clear, clean, and free of debris.

3.7 ACCEPTANCE

A. Test and demonstrate to the Owner the satisfactory operation of the system, free of leaks.

B. Instruct the Owner's designated personnel in the operation of the system, including adjustment of sprinklers, controller(s), and valves, as well as winterization procedure. Submit written instructions to Owner and Civil Engineer on operating and maintenance procedures.

1. Ensure that zone numbers on controller(s) correspond with zone numbers on Contractor's Design Drawing, and are in logical clockwise order.

C. Upon acceptance and completion of project, the Owner will assume operation and maintenance of the system.

3.8 CLEANING

A. Perform cleaning during installation of the work and upon completion of the work. Remove from site all excess materials, soil, debris, and equipment. Repair damage resulting form irrigation system installation.

END OF SECTION 32 80 00

SECTION 32 90 00 - PLANTING

PART 1 - GENERAL

1.1 SCOPE OF WORK

A. The Contractor shall furnish all labor, materials and equipment necessary to complete the following items of work in accordance with the Drawings and Specifications:

1. Preparation of seed bed and liming, fertilizing, seeding, and mulching as required to produce a uniform, erosion-free stand of grass.
2. Complete topsoil spreading and provide additional topsoil as necessary.
3. Erosion control blankets.
4. Maintenance and guarantee.

1.2 RELATED WORK SPECIFIED ELSEWHERE

A. Earthwork - See Division 31.

B. Sedimentation and Erosion Control - See Section 31 25 00.

1.3 REFERENCES

A. ISO 7410: Fertilizers and soil Conditions – Final Samples – Practical Arrangements

B. ISO 7851: Fertilizers and Soil Conditions – Classification ISO

C. ISO 8157: Fertilizers and Soil Conditions – Vocabulary ISO

D. ISO 8397: Solid Fertilizers and Soil Conditions – Test Sieving ISO

E. ASTM D5268: Standard Specification for Topsoil Used for Landscaping Purposes

F. ASTM D6146: Standard Guide for Monitoring Aqueous Nutrients in Watersheds

1.4 SUBMITTALS

A. Product Data: The Contractor shall submit Product Data and other technical information in accordance with Section 01300 to fully define the following products and/or materials to be furnished under this Section:
1. Seed blends.
2. Statement of guarantees.

B. No work shall commence until submittals have been reviewed and approved for general conformance with the Contract Documents.

1.5 REGULATORY REQUIREMENTS

A. All seeding shall be in accordance with local and state and federal regulations regarding erosion and sedimentation control.

1.6 QUALITY ASSURANCE

A. The work performed under this Section shall comply with the latest edition of the New York State Department of Transportation Construction and Material Specifications Recommendations, except as amended, modified or supplemented herein.

PART 2 - PRODUCTS

2.1 MATERIALS

A. All fertilizer, lime, grass seed, and mulch shall conform to New York State Department of Transportation Specification Recommendations unless noted otherwise herein. Seed blend shall consist of perennial types native to the area with weed content less than 5 percent, which will produce a close stand of grass exhibiting a vigorous, thriving condition upon acceptance by the Owner. Seed blend selection shall be submitted to the Owner for approval.

B. Seed for ditches, embankment side slopes, and back lot areas shall be a hearty, drought-resistant mixtureable to withstand sheet flow and occasional water submergence. These areas will most likely not be subject to frequent mowing.

C. Trees and shrubs shall be of the types noted on the Contract Drawings and shall conform to Recommendations in ANSI Z60.1 “Standard for Nursery Stock”.

D. Existing trees located on the project site at the beginning of construction which had been removed and placed in a safe area, shall be replanted and incorporated in the new project Work, as indicated and directed by the Owner’s Landscape Architect’s Contract Drawings.

2.2 EROSION CONTROL BLANKETS

A. Erosion control blankets for embankment and ditch side slopes shall be "North American Green" S150, or approved equal.

PART 3 - EXECUTION

3.1 SEEDING

A. Verify that prepared seed bed is ready to receive the work of this Section.

B. Beginning of installation means acceptance of existing site conditions.

C. All areas of the site disturbed during this contract which are not to be paved shall be seeded and mulched.

D. Fertilizing, liming, seeding, and mulching shall be in accordance with New York State Department of Transportation Specification Recommendations.

E. Finish grade area by floating and hand raking to an acceptable smooth even grade. Remove high points and fill low pockets to eliminate the possibility of standing water. All areas shall have positive drainage. Bring finished grades level with adjacent curbs, walks and existing grades.

F. Hydroseeding is an acceptable alternative if done as a two-step method and approved by the Owner.

G. See Section 31 25 00 for erosion control blankets to be used in specified areas.

3.2 MAINTENANCE

A. The Contractor shall maintain (water, mow, and provide weed control) all seeded areas throughout the construction period and repair any and all damage to the same before final inspection.

B. All seeded areas shall be kept constantly wet for 20 days immediately following seeding and mulching operations.

C. The finished product shall be uniform, healthy and erosion-free.

D. All "washouts" shall be repaired and reseeded. Bare spots shall be re-seeded, fertilized and regraded and raked to an even grade.

E. Seed beds shall achieve a ninety (90) percent germination in uniformity for approval and final acceptance.

3.3 TREES AND SHRUBS

A. All trees and shrubs shall be dug, planted, staked (where applicable), fertilized, and mulched in accordance with New York State Department of Transportation Specification Recommendations and as detailed on the Drawings. Trees shall be locally grown.

B. All trees shall be installed in the locations shown on the Drawings.

3.4 GUARANTEE

A. All work shall be guaranteed by the Contractor for one growing season after planting.

B. The Contractor shall guarantee, for one year following acceptance the project by the Owner, the control of erosion. Should erosion occur, the Contractor shall restore the areas without cost to the Owner. This guarantee shall be included in the base bid.

3.5 CLEANING

A. Pressure washing of concrete, masonry and asphalt paving stained or soiled shall be performed with a power sweeper using water under pressure.

B. At completion of Work, remove all debris, equipment and surplus materials. Leave project site in a neat and orderly condition.

END OF SECTION 32 90 00

SECTION 32 91 00 - LANDSCAPE PLANTING STANDARD

PART 1 - GENERAL

1.1 RELATED DOCUMENTS

A. Drawings and General Provisions of the Contract, Including General and Supplementary Conditions and Division 1 Specification Sections, apply to this Section. Execute the Work of this Specification in accordance with applicable portions of:

1. Division 1 - General Requirements
2. Landscape Drawings

1.2 SUMMARY

A. Section Includes:

1. Plants.
2. Planting soils.
3. Tree stabilization.

B. Related Sections:

1. Division 01 Section "Temporary Tree and Plant Protection" for protecting, trimming, pruning, repairing, and replacing existing trees to remain that interfere with, or are affected by, execution of the Work
2. Division 31 Section "Site Clearing" for protection of existing trees and plantings, topsoil stripping and stockpiling, and site clearing.
3. Division 32 Section "Turf and Grasses" for turf (lawn) and meadow planting, hydroseeding, and erosion-control materials.

1.3 ALLOWANCES

A. Allowances for plants are specified in Division 01 Section “Allowances.”

1. Perform planting work under quantity allowances and only as authorized. Authorized work includes: Unless specifically excluded hereinafter under RELATED SECTIONS: provide labor, materials, equipment and services necessary and incidental to complete work described by this Section's title shown above. Work includes, but is not necessarily limited to:
   a. Fine Grading.
   b. Providing and Placing all off-site Topsoil and Planting Soil Backfill Mix required to complete Landscape Development Work.
   c. Preparation of Planting Areas as required.
   d. Furnishing and installing all Plant Material.
   e. Furnishing and installing all Shredded Hardwood Bark Mulch/Stone Mulch.
   f. Furnish and install Reforestation. (NIC)

g. Pruning, Fertilizing and Clean-up of existing wooded area and existing stand-alone trees to remain.
h. Maintenance of all Work until Final Acceptance (not less than 60 days).
i. Clean-up of Work Area as outlined in these specifications.

2. Notify Landscape Architect weekly of extent of work performed that is attributable to quantity allowances.
3. Perform work that exceeds quantity allowances only as authorized by Change Orders.

B. Work By Others;

1. Installation of Bituminous Parking Lots and Drives.
2. Installation of Curbs and Walks and Wheel Stops.
3. Buildings, out buildings and utilities.
4. Site Retaining walls

1.4 UNIT PRICES

1. Unit prices apply to authorized work covered by quantity allowances.
2. Unit prices apply to additions to and deletions from Work as authorized by Change Orders.

1.5 DEFINITIONS

A. Backfill: The earth used to replace or the act of replacing earth in an excavation.

B Balled and Burlapped Stock: Plants dug with firm, natural balls of earth in which they were grown, with ball size not less than diameter and depth recommended by ANSI Z60.1 for type and size of plant required; wrapped with burlap, tied, rigidly supported, and drum laced with twine with the root flare visible at the surface of the ball as recommended by ANSI Z60.1.

C. Balled and Potted Stock: Plants dug with firm, natural balls of earth in which they are grown and placed, unbroken, in a container. Ball size is not less than diameter and depth recommended by ANSI Z60.1 for type and size of plant required.

D. Bare-Root Stock: Plants with a well-branched, fibrous-root system developed by transplanting or root pruning, with soil or growing medium removed, and with not less than minimum root spread according to ANSI Z60.1 for type and size of plant required.

E. Container-Grown Stock: Healthy, vigorous, well-rooted plants grown in a container, with a well-established root system reaching sides of container and maintaining a firm ball when removed from container. Container shall be rigid enough to hold ball shape and protect root mass during shipping and be sized according to ANSI Z60.1 for type and size of plant required.

F. Duff Layer: The surface layer of native topsoil that is composed of mostly decayed leaves, twigs, and detritus.

G. Fabric Bag-Grown Stock: Healthy, vigorous, well-rooted plants established and grown in-ground in a porous fabric bag with well-established root system reaching sides of fabric bag. Fabric bag size is not less than diameter, depth, and volume required by ANSI Z60.1 for type and size of plant.

H. Finish Grade: Elevation of finished surface of planting soil.

I. Manufactured Topsoil: Soil produced off-site by homogeneously blending mineral soils or sand with stabilized organic soil amendments to produce topsoil or planting soil.

J. Pesticide: A substance or mixture intended for preventing, destroying, repelling, or mitigating a pest. This includes insecticides, miticides, herbicides, fungicides, rodenticides, and molluscicides. It also includes substances or mixtures intended for use as a plant regulator, defoliant, or desiccant.

K. Pests: Living organisms that occur where they are not desired, or that cause damage to plants, animals, or people. These include insects, mites, grubs, mollusks (snails and slugs), rodents (gophers, moles, and mice), unwanted plants (weeds), fungi, bacteria, and viruses.

L. Planting Area: Areas to be planted.

M. Planting Soil: Standardized topsoil; existing, native surface topsoil; existing, in-place surface soil; imported topsoil; or manufactured topsoil that is modified with soil amendments and perhaps fertilizers to produce a soil mixture best for plant growth.

N. Plant; Plants; Plant Material: These terms refer to vegetation in general, including trees, shrubs, vines, ground covers, ornamental grasses, bulbs, corms, tubers, or herbaceous vegetation.

O. Root Flare: Also called "trunk flare." The area at the base of the plant's stem or trunk where the stem or trunk broadens to form roots; the area of transition between the root system and the stem or trunk.

P. Stem Girdling Roots: Roots that encircle the stems (trunks) of trees below the soil surface.

Q. Subgrade: Surface or elevation of subsoil remaining after excavation is complete, or the top surface of a fill or backfill before planting soil is placed.

R. Subsoil: All soil beneath the topsoil layer of the soil profile, and typified by the lack of organic matter and soil organisms.

S. Surface Soil: Soil that is present at the top layer of the existing soil profile at the Project site. In undisturbed areas, the surface soil is typically topsoil; but in disturbed areas such as urban environments, the surface soil can be subsoil.

1.6 ACTION SUBMITTALS

A. Product Data: For each type of product indicated, including soils.

1. Plant Materials: Include quantities, sizes, quality, and sources for plant materials.

2. Pesticides and Herbicides: Include product label and manufacturer's application instruction specific to the Project.
3. Plant Photographs: Include color photographs in either digital or 3- by 5-inch (76- by 127-mm) print format of each required species and size of plant material as it will be furnished to the Project. Take photographs from an angle depicting true size and condition of the typical plant to be furnished. Include a scale rod or other measuring device in each photograph. For species where more than 10 plants are required, include a minimum of three photographs showing the average plant, the best quality plant, and the worst quality plant to be furnished. Identify each photograph with the full scientific name of the plant, plant size, and name of the growing nursery.

B. Samples for Verification: For each of the following:

1. Trees and Shrubs: Contact Landscape Architect for review of plant material, based on information received above in product data. The Landscape Architect reserves the right to inspect trees and shrubs either at place of growth or at site before planting, for compliance with requirements for name, variety, size and quality. Provide trees and shrubs grown in a recognized nursery in accordance with good horticultural practice. Provide healthy, vigorous stock grown under climatic conditions similar to conditions in the locality of the project and free of disease, insects, eggs, larvae, and defects such as knots, sunscald, injuries, abrasions or disfigurement. Provide trees and shrubs of the sizes shown as specified. Trees and shrubs of larger size may be used, if acceptable to Landscape Architect, and if sizes of roots or balls are increased proportionately.
2. Mulch: one quart volume of each organic mulch required, in sealed plastic bags labeled with composition of materials by percentage of weight and source of mulch. Each Sample shall by typical of the lot of material to be furnished; provide an accurate representation of color, texture, and organic makeup.
3. River Stone; Submit a minimum of 5 full size samples stone providing the 3 to 4 inch diameter required. Include full range of style, size, finish, color & texture proposed for the work.
4. Filter Fabric: 12 x12" sample, with manufacturer specifications.

1.7 INFORMATIONAL SUBMITTALS

A. Qualifications: The Landscape Work shall be done by a single firm specializing in landscaping work. Include list of similar projects completed, demonstration Installer's capabilities and experience. Include project names, addresses, and year completed, and include names and addresses of owners' contact persons.

B. Product Certificates: For each type of manufactured product, from manufacturer, and complying with the following:

1. General: Ship landscape materials with certificates of inspection as required by governmental authorities. Comply with governing regulation applicable to landscape materials.
2. Manufacturer's certified analysis of standard products.
3. Analysis of other materials by a recognized laboratory made according to methods established by the Association of official Analytical Chemists, where applicable.

C. Material Test Reports:

1. Certification: For information only, submit 2 copies of certificates of inspection as required by governmental authorities, and manufacturer's or vendor's certified analysis for soil

amendments and fertilizer materials. Submit other data substantiating that materials comply with specified requirements.

D. Maintenance Instructions: Maintenance Instructions: Submit two copies of typewritten instructions recommending procedures to be established by the Owner for the maintenance of landscape work for one full year. Submit prior to expiration of required maintenance period(s).

E. Provide two copies of warranty (See Item 1.11 for specific requirements).

F. Schedule of Work: For information only, submit 3 copies of tentative schedule to Owner and/or Owner's Agent along with Landscape Architect. Contractor shall keep all parties above apprised of any changes so that the Owner's Agent is aware of scheduled work at least 24 hours prior to said work being started.

1.8 QUALITY ASSURANCE

A. Installer Qualifications:

1. Provide Professional Memberships.
2. Provide number of years' experience in Landscape Installation in addition to requirements in Division 01 Section "Quality Requirements"
3. Provide Field Supervision Installers experience. Note full-time Supervisor to be on Project Site at all times when landscape installation is in progress.
4. Pesticide Applicator: Licensed

B. Provide Soil-Testing Laboratory Name and Qualifications.

C. Soil Analysis: For each unamended soil type, furnish soil analysis and a written report by a qualified soil testing laboratory stating percentages of organic matter; gradation of sand, silt, and clay content; cation exchange capacity; deleterious material; pH; and mineral and plant nutrient content of the soil.

1. Testing methods and written recommendations shall comply with USDA's Handbook No. 60.
2. The soil-testing laboratory shall oversee soil sampling; with depth, location, and number of samples to be taken per instructions from Landscape Architect. A minimum of three representative samples shall be taken from varied locations for each soil to be used or amended for planting purposes.
3. Report suitability of tested soil for plant growth.
   a. Based upon the test results, state recommendations for soil treatments and soil amendments to be incorporated. State recommendations in weight per 1000 sq ft or volume per cu. yd. for nitrogen, phosphorus, and potash nutrients and soil amendments to be added to produce satisfactory planting soil suitable for healthy, viable plants.
   b. Report presence of problem salts, minerals, or heavy metals, including aluminum, arsenic, barium, cadmium, chromium, cobalt, lead, lithium, and vanadium. If such problem materials are present, provide additional recommendations for corrective action.

D. Provide quality, size, genus, species, and variety of plants indicated, complying with applicable requirements in ANSI Z60.1. Do not make substitutions: If specified landscape material is not

obtainable, submit to Landscape Architect proof of non-availability and proposal for use of equivalent material. When authorized, adjustment of Contract amount will be made.

E. Plant Material Observation: Landscape Architect may observe plant material either at place of growth or at site before planting for compliance with requirements for genus, species, variety, cultivar, size, and quality. Landscape Architect retains right to observe trees and shrubs further for size and condition of balls and root systems, pests, disease symptoms, injuries, and latent defects and to reject unsatisfactory or defective material at any time during progress of work. Remove rejected trees or shrubs immediately from Project site.
   1. Notify Landscape Architect of sources of planting materials 14 days in advance of delivery to site.

1.9 PRODUCT DELIVERY, STORAGE AND HANDLING

A. Packaged Materials: Deliver packaged materials in original, unopened containers showing weight, certified analysis, name and address of manufacturer, and indication of conformance with state and federal laws if applicable. Protect materials from deterioration during delivery, and while stored at the site.

B. Bulk Materials:

   1. Do not dump or store bulk materials near structures, utilities, walkways and pavements, or on existing turf areas or plants.
   2. Provide erosion-control measures to prevent erosion or displacement of bulk materials, discharge of soil-bearing water runoff, and airborne dust reaching adjacent properties, water conveyance systems, or walkways.
   3. Accompany each delivery of bulk fertilizers, and soil amendments with appropriate certificates.

C. Plant Materials:

   1. Bare- Root Stock: Deliver bare-root stock plants freshly dug. Immediately after digging up bare-root stock, pack root system in wet straw, hay, or other suitable material to keep root system moist until planting.
   2. Do not prune trees and shrubs before delivery. Protect bark, branches, and root systems from sun scald, drying, wind burn, sweating, whipping, and other handling and tying damage. Do not bend or bind-tie trees or shrubs in such a manner as to destroy their natural shape. Provide protective covering of plants during shipping and delivery. Do not drop plants during delivery and handling.
   3. Label at least one tree and one shrub of each variety with a securely attached waterproof tag bearing legible designation of botanical and common name.
   4. Do not remove container grown stock from containers until planting time.
   5. Handle planting stock by root ball.
   6. Bulbs: NOT USED
   7. Deliver plants after preparations for planting have been completed, and install immediately. If planting is delayed more than six(6) hours after delivery, set plants and trees in their appropriate conditions, protect from weather and mechanical damage, and keep roots moist.

      a. Set balled stock on ground and cover ball with soil, peat moss, or other acceptable material.
      b. Do not remove container-grown stock from containers before time of planting.

c. Water root systems of plants stored on-site deeply and thoroughly with a fine-mist spray. Water as often as necessary to maintain root systems in a moist, but not overly-wet condition.
d. Heel-in bare-root stock. Soak roots that are in dry condition in water for two hours. Reject dried-out plants.

1.10 PROJECT CONDITIONS

A. Field Measurements: Installer must verify actual grade elevations, service and utility locations, irrigation system components, and dimensions of plantings and construction contiguous with new plantings by field measurements before proceeding with planting work. Installer must observe the conditions under which work is to be performed, and notify the Landscape Architect of unsatisfactory conditions. Do not proceed with the work until unsatisfactory conditions have been corrected in a manner acceptable to Installer.

B. Interruption of Existing Services or Utilities: Do not interrupt services or utilities to facilities occupied by Owner or others unless permitted under the following conditions and then only after arranging to provide temporary services or utilities according to requirements indicated:

1. Notify the Landscape Architect/ Construction Manager and or Owner no fewer seven days in advance of proposed interruption of each service or utility.
2. Do not proceed with interruption of services or utilities without Construction Managers and or Owner's written permission.

C. Planting Restrictions: Proceed with and complete the landscape work as rapidly as portions of the site become available, working within the seasonal limitations for each kind of landscape work required. Coordinate planting periods with maintenance periods to provide required maintenance from date of Substantial Completion.

D. Excavation: When conditions detrimental to plant growth are encountered, such as rubble fill, adverse drainage conditions, or obstructions, notify Landscape Architect before planting.

E. Planting Schedule: Prepare a proposed planting schedule. Schedule the dates for each type of landscape work during normal seasons for such work in the area of the site. Correlate with specified maintenance periods to provide maintenance until acceptance by the Owner. Once accepted, revise dates only as approved in writing, after documentation of reasons for delays.

F. Coordination with Lawns: Plant trees and shrubs after final grades are established and prior to planting of lawns, unless otherwise acceptable to the Landscape Architect. If planting of trees and shrubs occurs after lawn work, protect lawn areas and promptly repair damage to lawns resulting from planting operations.

G. Protect existing trees, shrubs and other hardscape elements against damage including trespassing, and erosion.

H. Protect all existing plant material in the area of this contract, whether inside or outside the contract limit line, against any damage, which in the opinion of the Landscape Architect will cause death or major retardation. Such material shall be replaced with same size and species by the Contractor at no additional cost should such damage occur.

I. Inspection of work will be made at the conclusion of work (at acceptance of the project). Submit written notice requesting final inspection at least 10 days prior to anticipated date.

1.11 WARRANTY

A. Special Warranty: Installer agrees to repair or replace plantings and accessories that fail in materials, workmanship, or growth within specified warranty period.

1. Failures include, but are not limited to the following:
   a. Death and unsatisfactory growth, except for defects resulting from abuse, lack of adequate maintenance, or neglect by Owner, or incidents that are beyond contractor's control.
   b. Structural failures including plantings, falling or blowing over.
   c. Structural failures of tree stabilization structures, or stone energy dissipaters

2. Warranty periods will begin from the Date of installation completion (as determined by the Landscape Architect for a period of 12 months (one year).
3. Include the following remedial actions as a minimum.
   a. Immediately remove dead plants and replace unless required to plant in the succeeding planting season.
   b. Replace plants that are move than 25 percent dead or in an unhealthy condition at end of warranty period.
   c. A limit of one replacement for each plant will be required except for losses or replacements due to failure to comply with requirements.
   d. Provide extended warranty for a period equal to the original warranty period, for replaced plant material.

1.12 MAINTENANCE

A. Maintain lawns for not less than the period stated below, and longer as required to establish an acceptable lawn.

1. Seeded and/or sodded lawns, not less than 60 days. If seeded in Fall and not given full 60 days of maintenance, or if not considered acceptable at that time, continue maintenance the following Spring until acceptable lawn is established.

B. Maintain lawns by watering, fertilizing, weeding, mowing, trimming and other operations such as rolling, regrading, and replanting as required to establish a smooth, acceptable lawn, free of eroded or bare areas.

C. All planted trees, shrubs, groundcovers and annual flowers, shall be maintained until final acceptance of the completed contract. This shall be not less than 60 days. Maintenance shall include watering, cultivating, control of insects, fungus, and other horticultural operations necessary for the proper growth of all plants.

PART 2 - PRODUCTS

2.1 PLANT MATERIAL

A. General: Furnish nursery-grown plants true to genus, species, variety, cultivar, stem form, shearing, and other features indicated in Plant Schedule or Plant Legend shown on Landscape Drawings and complying with ANSI Z60.1; and with healthy root systems developed by

transplanting or root pruning. Provide well-shaped, fully branched, healthy, vigorous stock, densely foliated when in leaf and free of disease, pests, eggs, larvae, and defects such as knots, sun scald, injuries, abrasions, and disfigurement.

1. Trees with damaged, crooked, or multiple leaders (unless otherwise indicated); tight vertical branches where bark is squeezed between two branches or between branch and trunk ("included bark"); crossing trunks; or with stem girdling roots will be rejected.
2. Collected Stock: Do not use plants harvested from the wild, from native stands, from an established landscape planting, or not grown in a nursery unless otherwise indicated.

B. Provide plants of sizes, grades, and ball or container sizes complying with ANSI Z60.1 "Standard for Nursery Stock" for types and form of plants required. Plants of a larger size may be used if acceptable to Landscape Architect, with a proportionate increase in size of roots or balls. Provide plant materials true to name and variety established by the American Joint Committee on Horticultural Nomenclature "Standardized Plant Names," Second Edition, 1942.

C. Deciduous Trees: Provide trees of height and caliper listed or shown and with branching configuration recommended by ANSI Z60.1 for type and species required. Provide single stem trees except where special forms are shown or listed.

1. Provide balled and burlapped (B&B) deciduous trees.
2. Container grown deciduous trees will be acceptable in lieu of balled and burlapped deciduous trees subject to specified limitations of ANSI Z60.1 for container stock.

D. Deciduous Shrubs: Provide shrubs of the height shown or listed and with not less than the minimum number of canes required by ANSI 260.1 for the type and height of shrub required.

1. Provide balled and burlapped (B&B), bare root (B.R.) or container deciduous shrubs as specified in plant list.
2. Container grown deciduous shrubs will be acceptable in lieu of balled and burlapped deciduous shrubs subject to the specified limitations for container grown stock.

E. Coniferous and Broadleaved Evergreens: Provide evergreens of the sizes shown or listed. Dimensions indicate minimum spread for spreading and semi-spreading type evergreens and height for other types, such as globe, dwarf cone, pyramidal, broad upright and columnar. Provide normal quality evergreens with well-balanced from complying with requirements for other size relationships to the primary dimension shown.

1. Provide balled and burlapped (B&B) or container grown evergreens as specified.
2. Container grown evergreens will be acceptable in lieu of balled and burlapped evergreens subject to the specified limitations for container grown stock.

F. Labeling: label at least one plant of each variety, size, and caliper with a securely attached, waterproof tag bearing legible designation of common name and full scientific name, including genus and species. Include nomenclature for hybrid, variety, or cultivar, if applicable for the plant as shown on Drawings.

G. If formal arrangements or consecutive order of plants is shown on plans, select stock for uniform height and spread, and number the labels to assure symmetry in planting.

H. Annuals and Biennials – NOT USED

2.2 INORGANIC SOIL AMENDMENTS

A. Ground Limestone: (To be incorporated into soil if soil pH value test shows low level of soil Ph which needs to be raised.). ASTM C 602, natural limestone containing not less than 85% of total carbonates, ground so that not less 90% passes a 10 mesh sieve and not less than 30% passes a 100 mesh sieve. Apply at the rate adequate to bring pH range up to 6.0 to 6.5.

B. Sulfur: Granular, biodegradable, and containing a minimum of 90 percent sulfur, with a minimum of 99 percent passing through No.6 sieve and a maximum of 10 percent passing through no. 40 sieve.

C. Iron Sulphate: Granulated ferrous sulfate containing a minimum of 20 percent and 10 percent sulfur. (To be incorporated into soil if soil pH value test shows high level of soil pH which needs to be lowered.) Iron Sulphate shall be applied at the rate adequate to bring pH range down to 6.0 to 6.5 and as per "Cornell Recommendations for Commercial Turf Grass Management".

D. Aluminum Sulfate: Commercial grade, unadulterated.

E. Perlite: Horticultural perlite, soil amendment grade.

F. Agricultural gypsum: Minimum 90 percent calcium sulfate, finely ground with 90 percent passing through No. 50 sieve.

G. Sand: Clean , washed, natural or manufactured, and free of toxic materials.

H. Diatomaceous Earth: Calcined, 90 percent silica, with approximately 140 percent water absorption capacity by weight.

I. Zeolites: Mineral clinoptilolite with at least 60 percent water absorption by weight.

2.3 ORGANIC SOIL AMENDMENTS

A. Compost: Well-composted, stable, and weed-free organic matter, pH range of 5.5 to 8; moisture content 35 to 55 percent by weight; 100 percent passing through 1/2 inch sieve sieve; soluble salt content of 4 to 8 decisiemens/m; not exceeding 0.5 percent inert contaminants and free of substances toxic to plantings; and as follows:
   1. Organic Matter Content: 50 to 60 percent of dry weight
   2. Feedstock: NOT USED

B. Peat Humus: FS Q-P-166 and with the texture and pH range OF 3.4 TO 4.8.

C. Muck Peat: Partially decomposed moss peat, native peat, or reed-sedge peat, finely divided or of granular texture, with a pH range of 6 to 7.5, and having a water-absorbing capacity of 1100 to 2000 percent.

D. Wood Derivatives: NOT USED

E. Manure: NOT USED

2.4 FERTILIZERS

A. Bonemeal: Commercial, raw, or steamed, finely ground; 4% nitrogen and 20% phosphoric acid.

B. Superphosphate: Commercial, phosphate mixture, Soluble; a minimum of 20% available phosphoric acid.

C. Commercial Fertilizer: Commercial-grade complete fertilizer of neutral character, consisting of fast and slow-release nitrogen, 50 percent derived from natural organic sources of urea formaldehyde, phosphorous, and potassium.

1. For All New Trees and Shrubs:
   a. All trees and shrubs shall be fertilized with a controlled release 16-8-16 analysis fertilizer contained in a polyethylene perforated bag with micropore holes. The bag shall contain four (4) ounces minimum of water soluble fertilizer so as to be effective for eight (8) years.

   b. The packets shall be placed equidistantly within the planting pit adjacent to the ball or root mass, but not in direct contact with roots. Placement depth shall be 6 to 8 inches. Packets shall not be cut, ripped or damaged. If it becomes necessary to remove and replace dead or unhealthy plants, damaged or broken packets shall be replaced with new packets.

   c. A "Certificate of Compliance" must accompany invoice showing quantity of material ordered, where material was supplied and shipped to, and its consigned route and specific job application.

2. For lawns, provide fertilizer with not less than 4% phosphoric acid and not less than 2% potassium and the percentage of nitrogen required to provide not less than 1 lb. of actual nitrogen per 1000 sq. ft. of lawn area. Provide nitrogen in a form that will be available to the lawn during the initial period of growth.

D. Organic Fertilizer and Soil Conditioner: All trees and shrubs shall be treated with PHC Healthy Start which contains a blend of natural organic nutrients, proteins, sugars and other carbohydrates, humic acids, biostimulants and beneficial bacteria that enrich soil.

1. PHC Healthy Start is available from Plant Health Care, Inc., 440 William Pitt Way, Pittsburgh, Pennsylvania, 1-800-421-9051.

E. Superabsorbent Co-polymer for trees, shrubs, herbaceous ground cover and coniferous ground cover shall be "Terra-Sorb" AG as manufactured by Industrial Services International, Inc., PO Box 10834, Bradenton, Florida, 34282-0834, Telephone (800) 227-6728.

F. Terra-Wet: All trees, shrubs, and coniferous ground cover shall be treated with Terra-Wet which is a performance enhanced wetter/penetrant derived from Yucca Schidigera plants. Terra-Wet is available from Plant Health Care, Inc., 440 William Pitt Way, Pittsburgh, Pennsylvania, 1800-421-9051.

G. Natural Organic Biostimulant for herbaceous and coniferous ground cover shall be “Dry Roots 2” root growth enhancer and soil conditioner as manufactured by Roots Inc. a division of LISA Products Corp., 25 Science Park , New Haven, CT 06511 (203) 786-5295.

H. Doggett 32-7-7 Slow Release Tree Fertilizer: All existing trees over 8” caliper to remain on main site with Doggett 32-7-7 Slow Release Tree Fertilizer as manufactured by The Doggett Corporation, Lebanon, NJ 08833, 1-800-448-1862.

I. Doggett’s Natural Resource: All existing trees over 8” caliper to remain on the main site shall be injected with Doggett’s Natural Resource as manufactured by The Doggett Corporation, Lebanon, NJ 08833, 1-800-448-1862.

J. Mycor Tree, Tree Saver Pt Injectable: All existing trees over 8” caliper to remain on the main site shall be injected with Mycor Tree, Tree Saver Pt Injectable, which is an ectomycorrihizal fungi superstrain inoculant containing live spores of beneficial ectomycorrhizal fungi, a polyacrylamide superabsorbent and plant biostimulants to ensure the survival and performance of newly planted trees and shrubs. Mycor Tree, Tree Saver Pt Injectable is available from Plant Health Care, Inc., 44 William Pitt Way , Pittsburgh, Pennsylvania, 1-800-421-9051.

2.5 PLANTING SOILS

A. Topsoil

1. Topsoil shall be from off-site sources. It shall be without admixture of subsoil or slag and shall be free of stones, lumps, plants or their roots, sticks and extraneous matter, and shall not be moved, placed or used while in a frozen or muddy condition.

2. Topsoil from off-site sources shall have an acidity range of pH 5.0 to 7.0 and shall contain not less than 5% organic matter as determined by the "Walkley-Black Method" (Colorimetric version). Sufficient limestone shall be added to topsoil used to bring it to a range of pH 6.0 to pH 6.5.

3. Soil sample tests will be ordered by the Landscape Contractor and shall be made by a state or commercial laboratory using methods approved by the Associates of official Agricultural chemists or the State Agricultural Experiment Station.

4. Such analysis will be paid for by the Contractor. Moving and placing of topsoil may be made after approval of the analysis by the Landscape Architect.

5. If approved, natural topsoil not having the hydrogen-ion value specified above may be amended by the contractor, at his own expense, to bring it within the specified limits. Topsoil shall meet the following mechanical analysis:

	Passing %	Retained %
1" Screen	100%	0%
1/2" Screen	97-100%	0-3%
No. 100 Mesh Sieve	60-40%	40-60%

6. There shall be a minimum of 4" of topsoil (after settlement) in all plant beds, pit plantings, ground cover areas, and lawns or as called for on the drawings whichever is greater.

B. Fill - NOT USED

C. Lightweight Or Structure Planting Soil – NOT USED

2.6 MULCHES

A. Organic Mulch: Free from deleterious materials and suitable as a top dressing of trees and shrubs, consisting of the following:

1. Mulch: Shall be 100% Double Hammered Milled Shredded Hardwood Bark Mulch. Mulch shall be free from any extraneous materials, and spread to a 3" depth minimum (after settlement). Contractor shall submit certification detailing content and source of mulch for Landscape Architect's approval.
2. Color: Natural

B. Compost Mulch: NOT USED

C. Mineral Mulch: Hard, durable stone (River Stone), washed free of loam, sand, clay, and other foreign substances, of following type, size range, and color: Washed, 1 to 3” in diameter, Natural color.

2.7 WEED-CONTROL BARRIERS – NOT USED

2.8 PESTICIDES

A. General: Pesticide registered and approved by EPA, acceptable to authorities having jurisdiction, and of type recommended by manufacturer for each specific problem and as required for Project conditions and application. Do not use restricted pesticides unless authorized in writing by authorities having jurisdiction.

B. Pre-Emergent Herbicide (Selective and Non-Selective): Effective for controlling the germination or growth of weeds within planted areas at the soil level directly below the mulch layer.

C. Post-Emergent Herbicide (Selective and Non-Selective): Effective for controlling weed growth that has already germinated.

2.9 TREE STABILIZATION MATERIALS

A. Stakes and Guys:

1. Upright and Guy Stakes: Rough-sawn, sound, new hardwood, treated softwood with specified wood pressure-preservative treatment, free of knots, holes, cross grain, and other defects, (6” by 6” by 3’-6” min), pointed at one end.
2. Wood Deadmen: Timbers measuring 8”in diameter and 48”long, treated with specified wood pressure-preservative treatment.
3. Guys and Tie Wires: ASTM A 641/A 641M, Class 1, galvanized-steel wire, two-strand, twisted, 12 gauge.

4. Guy Cables: Five-strand, galvanized-steel cable, with zinc-coated turnbuckles, a minimum of 3 inches long, with two 3/8 inch galvanized eyebolts.

B. Root-Ball Stabilization Materials: NOT USED

2.10 LANDSCAPE EDGINGS – NOT USED

2.11 TREE GRATES – NOT USED

2.12 MISCELLANEOUS LANDSCAPE MATERIALS

A. Anti-Desiccant: Emulsion type, film-forming agent similar to Dowax by Dow Chemical Co., or Wilt-Pruf by Nursery Specialty Products, Inc., designed to permit transpiration, but retard excessive loss of moisture from plants. Deliver in manufacturer's fully identified containers and mix in accordance with manufacturer's instructions. All plants shall be sprayed with an anti-desiccant once in late Fall (November) and once in late Winter (February).

B. Wrapping: Tree-wrap tape not less than 4" wide, designed to prevent borer damage and winter freezing.

C. Filter Fabric: Filter weave 40/10 as manufactured by Nicolon/Mirafi Group. Filter weave 40/10 is available from Ragen Associates. 20 Larsen Rd., Iselin, NJ 08830, (800) 752-1010.

PART 3 - EXECUTION

3.1 EXAMINATION

A. Examine areas to receive plants for compliance with requirements and conditions affecting installation and performance.

1. Verify that no foreign or deleterious material or liquid such as paint, paint washout, concrete slurry, concrete layers or chunks, cement, plaster, oils, gasoline, diesel fuel, paint thinner, turpentine, tar, roofing compound, or acid has been deposited in soil within a planting area.
2. Do not mix or place soils and soil amendments in frozen, wet, or muddy conditions.
3. Suspend soil spreading, grading, and tilling operations during periods of excessive soil moisture until the moisture content reaches acceptable levels to attain the required results.
4. Uniformly moisten excessively dry soil that is not workable and which is too dusty.

B. Proceed with installation only after unsatisfactory conditions have been corrected.

C. If contamination by foreign or deleterious material or liquid is present in soil within a planting area, remove the soil and contamination as directed by Architect and replace with new planting soil.

3.2 PREPARATION

A. Protect structures, utilities, sidewalks, pavements, and other facilities and turf areas and existing plants from damage caused by planting operations.

B. Install erosion-control measures to prevent erosion or displacement of soils and discharge of soil-bearing water runoff or airborne dust to adjacent properties and walkways.

C. Lay out individual tree and shrub locations and areas for multiple plantings. Stake locations, outline areas, adjust locations when requested, and obtain Landscape Architect's acceptance of layout before excavating or planting. Make minor adjustments as required.

D. Apply antidesiccant to trees and shrubs using power spray to provide an adequate film over trunks (before wrapping), branches, stems, twigs, and foliage to protect during digging, handling, and transportation.
   1. If deciduous trees or shrubs are moved in full leaf, spray with antidesiccant at nursery before moving and again two weeks after planting.

E. Wrap trees and shrubs with burlap fabric over trunks, branches, stems, twigs, and foliage to protect from wind and other damage during digging, handling, and transportation.

3.3 PLANTING AREA ESTABLISHMENT

A. Rough grade will be left 4” below finished grade by others. Loosen subgrade of lawn areas to a minimum depth of 4”. Remove stones over 1” in any dimension and sticks, roots, rubbish and other extraneous matter and legally dispose fo them off Owner’s property. Limit preparation to areas, which will be planted promptly after preparation.

   1. Spread topsoil to minimum depth required to meet lines, grades and elevations shown, after light rolling and natural settlement (4” after settlement). Place approximately 1/2 of total amount of topsoil required. Work into top of loosened subgrade to create a transition layer and then place remains of topsoil. Add specified soil amendments (as per Section 3.19-B of this specification) and mix thoroughly into the upper 4 inches of topsoil.
   2. Where final grades are not indicated, finish grades shall be of uniform level or slope between points for which elevations are given or from such points to existing grades, except that tops and bottoms of banks shall be rounded. Subgrade elevations shall be understood to be the specified depth below finished grades.
   3. Moisten prepared lawn areas before planting if soil is dry. Water thoroughly and allow surface moisture to dry before seeding. Do not create a muddy soil condition.
   4. Restore lawn areas to specified condition if eroded or otherwise disturbed after fine grading and prior to planting.

B. Finish Grading: Grade planting areas to a smooth, uniform surface plane with loose, uniformly fine texture. Roll and rake, remove ridges, and fill depressions to meet finish grades.

C. Before planting, obtain Landscape Architect's acceptance of finish grading; restore planting areas if eroded or otherwise disturbed after finish grading.

3.4 EXCAVATION FOR TREES AND SHRUBS

A. Planting Pits and Trenches: Excavate circular planting pits with sides sloping inward at a 45 degree angle. Excavations with vertical sides are not acceptable. Leave center bottom of excavation slightly raised at center to provide proper drainage. Ensure that root ball will sit on undisturbed base soil to prevent settling. Loosen hard subsoil in bottom of excavation.

1. For balled and burlapped (B&B) trees and shrubs, make excavations at least the equivalent of two and a half times as wide as the ball radius and equal to the ball depth, plus the following allowance for setting of ball on a layer of compacted backfill: Allow for 6" setting layer of planting soil mixture.
2. Excavate at least 12 inches wider than root spread and deep enough to accommodate vertical roots for bare-root stock.
3. Do not excavate deeper than the depth of the root ball, measured from the root flare to the bottom of the root ball.
4. If area under the plant was initially dug too deep, add soil to raise it to the correct level and thoroughly tamp the added soil to prevent settling.
5. Maintain required angles of repose of adjacent material as show on the Drawings. Do not excavate subgrades of adjacent paving, structures, hardscapes, or other new or existing improvements.
6. Maintain supervision of excavations during working hours.
7. Keep excavations covered or otherwise protected after working hours, overnight and when unattended by contractor's personnel.

B. Subsoil and topsoil removed from excavations MAY NOT be used as planting soil.

C. Obstructions: Notify Landscape Architect if unexpected rock or obstructions detrimental to trees or shrubs are encountered in excavations.

D. Drainage: Notify Landscape Architect if subsoil conditions evidence unexpected water seepage or retention in tree or shrub planting pits.

E. Fill excavations with water and allow to percolate away before positioning trees and shrubs.

3.5 TREE, SHRUB, AND VINE PLANTING

A. Before planting, verify that root flare is visible at top of root ball according to ANSI Z60.1. If root flare is not visible, remove soil in a level manner from the root ball to where the tip-most root emerges from the trunk. After soil removal to expose the root flare, verify that the root ball still meets size requirements.

B. Remove stem girdling roots and kinked roots, Remove injured roots by cutting cleanly; do not break.

C. Set balled and burlapped stock plumb and in center of planting pit or trench with root flare 3 inches above adjacent finished grade.

1. When set, apply "Terra-Wet" to planting pit/hole as follows: Dilute 100 to 1 in cold water (1 oz. of Terra-Wet per 100 gallons of water). "Terra-Wet" may foam with agitation, to reduce foaming add an anti-foaming agent to mix as per manufacturer's recommendations.

2. Apply the solution to the excavated planting hole at the rate of 5 gallons per inch of caliper for trees and 3 gallons for 12” of root ball for shrubs. Subsequently place plant in planting hole and drench plant ball with “Terra-Wet”.
3. After “Terra-Wet” application place backfill around base and sides of ball and work each layer to settle backfill and eliminate voids and air pockets.
4. During the placement of backfill place "Unique Fertilizer Packets" as specified in section 2.4 C as follows:

	Types of Plants	No. of Packets
a.	Trees:	
	Over 4 inch caliper	4
	1 to 4 inch caliper	3
	Over 6 feet high	4
	3 to 6 feet high	3
	15 to 36 inches high	2
	Under 15 inches high	1
b.	Shrubs:	
	Over 3 feet high	3
	2 to 3 feet high	2
	Under 2 feet high	1

The packets shall be placed equidistantly within the planting pit adjacent to the ball or root mass, but not in direct contact with roots. Placement depth shall be 6 to 8 inches. Packets shall not be cut, ripped or damaged. If it becomes necessary to remove and replace dead or unhealthy plants, damaged or broken packets shall be replaced with new packets.

5. When excavation is approximately 2/3 full, water thoroughly before placing remainder of backfill. Repeat watering until no more is absorbed. Water again after placing final layer of backfill. Remove collar ropes only. Retain burlap on balls.

D. Set bare root stock on cushion of planting soil mixture. Spread roots, apply “Terra-Wet” to root mass by spraying. Then carefully work backfill around roots by hand and puddle with water until backfill layers are completely saturated. Plumb before backfilling and maintain plumb while working backfill around roots and placing layers above roots. Set collar 1" to 2" above adjacent finish landscape grades. Spread cut roots without tangling or turning up to surface. Cut injured roots clean, do not break.

E. Set container grown stock as specified for balled and burlapped stock, except cut cans on two sides with an approved can cutter; remove bottoms of wooden boxes after partial backfilling so as not to damage root balls.

F. When planting on slopes, set the plant so the root flare on the uphill side is flush with the surrounding soil on the slope: the edge of the root ball on the downhill side will be above the surrounding soil. Apply enough soil to cover the downhill side of the root ball.

G. Dish top of backfill to allow for mulching. For Spring planting, provide additional backfill berm around edge of excavations to form shallow saucer to collect water.

1. Note: Surface of all Shrub Beds shall be crowned or sloped as required to achieve a 3% minimum surface pitch and insure positive surface drainage.

H. Apply anti-desiccant prior to the onset of winter and again in mid-winter, using power spray to provide an adequate film over trunks, branches, stems, twigs, and foliage. If deciduous trees or shrubs are moved in full-leaf, spray with anti-desiccant at nursery before moving and again two weeks after planting.

I. Wrap tree trunks of 2" caliper and larger. Start at ground and cover trunk to height of first branches and securely attach. Inspect tree trunks for injury, improper pruning and insect infestation and take corrective measures required before wrapping.

3.6 MECHANIZED TREE SPADE PLANTING – NOT USED

3.7 TREE, SHRUB, AND VINE PRUNING

A. Remove only dead, dying, or broken branches, Do not prune for Shape.

B. Prune, thin out and shape trees and shrubs in accordance with standard horticultural practice. Prune trees to retain required height and spread. Unless otherwise directed by the Landscape Architect, do not cut tree leaders, and remove only injured or dead branches from flowering trees, if any. Prune shrubs to retain natural character and accomplish their use in the landscape design. Required shrub sizes are the size after pruning.

1. Remove and replace excessively pruned or misformed stock resulting from improper pruning.
2. Do not apply pruning paint to wounds.

3.8 TREE STABILIZATION

A. Install trunk stabilization as follows unless otherwise indicated:

1. Upright Staking and Tying: Stake trees of 2- through 5-inch caliper. Stake trees of less than 2-inch caliper only as required to prevent wind tip out. Use a minimum of two stakes of length required to penetrate at least 18 inches below bottom of backfilled excavation and to extend to the dimension shown on Drawings. Set vertical stakes and space to avoid penetrating root balls or root masses.
2. Use two stakes for trees up to 12 feet high and 2-1/2 inches or less in caliper; three stakes for trees less than 14 feet high and up to 4 inches in caliper. Space stakes equally around trees.
3. Support trees with bands of flexible ties at contact points with tree trunk. Allow enough slack to avoid rigid restraint of tree.

3.9 ROOT-BARRIER INSTALLATION – NOT USED

3.10 PLANTING IN PLANTERS – NOT USED

3.11 GROUND COVER AND PLANT PLANTING – NOT USED

3.12 PLANTING AREA MULCHING

A. Mulch backfilled surfaces of planting areas and other areas indicated.

1. Trees and tree like shrubs in Turf Areas: Apply mulch ring of 3 inch thick with 36 inch radius around trunks or stems. Do not place mulch within six inches of trunk or stems
2. Organic Mulch in Planting Areas: Apply three inches thickness of organic mulch or stone extending 12 inches beyond edge of individual planting pit or trench and over whole surface

of plating area, and finish level with adjacent finished grades. Do not place mulch within three inches of trunks or stems.

3.13 EDGING INSTALLATION

A. Shovel-Cut Edging. Separate mulched areas from turf areas with a 45 degree 4 to 6 inch deep, shovel cut edge.

3.14 TREE GRATE INSTALLATION – NOT USED

3.15 PLANT MAINTENANCE

A. Begin maintenance immediately after planting. Maintain trees, shrubs and other plants until final acceptance, but in no case less than the following period: 60 days after planting.

B. Maintain plantings by pruning, cultivating, watering, weeding, fertilizing, mulching, restoring planting saucers, adjusting and repairing tree-stabilization devices, resetting to proper grades or vertical position, and performing other operations as required to establish healthy, viable plantings. Spray or treat as required to keep trees and shrubs free of insects and disease.

C. Fill in as necessary soil subsidence that may occur because of settling or other processes. Replace mulch materials damaged or lost in areas of subsidence.

D. Apply treatments as required to keep plant materials, planted areas, and soils free of pests and pathogens or disease. Use integrated past management practices whenever possible to minimize the use of pesticides and reduce hazards. Treatments include physical controls such as hosing off foliage, mechanical controls such as traps, and biological control agents.

E. Submit two copies of typewritten instructions recommending procedures to be established by the Owner for the maintenance of landscape work for one full year. Submit prior to the expiration of required maintenance period(s).

3.16 PESTICIDE APPLICATION

A. Apply pesticides and other chemical products and biological control agents in accordance with authorities having jurisdiction and manufacturer's written recommendations. Coordinate applications with Owner's operations and others in proximity to the Work. Notify Owner before each application is performed.

1. Pre-Emergent Herbicides (Selective and Non-Selective): Apply to tree, shrub, and ground-cover areas in accordance with manufacturer's written recommendations. Do not apply to seeded areas.

2. Post-Emergent Herbicides (Selective and Non-Selective): Apply only as necessary to treat already-germinated weeds and in accordance with manufacturer's written recommendations.

3.17 CLEANUP AND PROTECTION

A. During planting, keep adjacent paving and construction clean and work area in an orderly condition. During landscape installation, store materials and equipment where directed.

B. Protect landscape work and material from damage due to landscape operations, operations of other contractors and trades and trespassers. Maintain protection during installation and maintenance periods. Treat, repair, or replace damaged landscape work as directed.

C. After installation and before final inspection, remove nursery tags, nursery stakes, tie tape, labels, wire, burlap, and other debris from plant material, planting areas, and Project site.

3.18 DISPOSAL

A. Remove surplus soil and waste material including excess subsoil, unsuitable soil, trash, and debris and legally dispose of them off Owner's property.

3.19 PREPARATION OF PLANTING SOIL

A. Before mixing, clean topsoil of roots, plants, sods, stones, clay lumps and other extraneous materials harmful or toxic to plant growth.

B. Mix specified soil amendments at required rates (derived from Topsoil Analysis Report). Also include the following:

1. For Trees, Shrubs and all Ground covers (herbaceous and coniferous): "Terra-Sorb" AG at the rate of 32 oz. per Cubic Yard of Soil Mix.

2. For Trees and Shrubs (excluding coniferous ground cover): PHC Healthy Start 3-4-3 organic fertilizer/soil conditioner, shall be applied at 1/2 lb. per trunk diameter (cal.) inch for trees.

For shrubs as follows:

Plant Size	Rate Cups	Lbs.	# Plant Bag
1 Gallon	1/2	1/4	100
5 Gallon	1	1/2	50
15 Gallon	2	1	25
24” Ball/Box	3	1 1/2	16
36” Ball/Box	5	2 1/2	10
42” Ball/Box	6	3	8
54” Ball/Box	8	4	6
72” Ball/Box	10	5	5

C. Planting Soil Mixture: Shall consist of one part off-site topsoil, as required, one part clean coarse builder’s sand and one part humus. These shall be thoroughly mixed prior to any planting operations. The preceding shall be mixed with the soil amendments in Section 3.19 B.

D. Lightweight Soil Mixture: (NOT USED)

E. For pit and trench type planting, mix planting soil prior to back filling and/or placing stockpile at the site.

F. For planting beds, mix planting soil either prior to planting or apply on surface of topsoil and mix thoroughly before planting.

3.20 MISCELLANEOUS LANDSCAPE CONSTRUCTION

A. Remedial Work on Existing Trees:

1. Pruning: All existing trees on the main site shall be pruned according to the best practices of the trade, making sure all the necessary limbs are removed to make a head clearance height of at least eight (8) feet under such tree or as directed. The trees shall be pruned to remove broken, dead, or dangerous limbs in accordance with "Pruning Standards For Shade Trees" as published by The National Arborists Association, adopted in 1950. Limbs to be removed shall be cut back to nearest crotch. No stubs are to remain on the tree.

2. Fertilizing Soil Amendment: All existing trees outside the wooded area shall be fertilized with a combination of Dogget's Natural Resource and Doggett's 32-7-7 Slow-Release Tree Fertilizer combined with Mycor Tree, Tree Saver Pt. Injectable amendment.

   Apply mixture by injection into the soil/root area under hydraulic pressure. Soil injection shall be no more than 12" deep using a soil/root fertilization probe from a power sprayer. Pressure of 150 to 200 lbs. shall be more than adequate in good soils. Higher pressures may be used with care in more compacted soils.

   Injection of the soil shall begin at a point out from the trunk where good site judgment deems the finer roots to be. Injections shall be spaced 2-1/2 ft. to 3 ft. apart and extend well beyond the dripline. For individual trees, injections shall follow a concentric circle type pattern.

   Mixture:

Product	**Dilution**
Doggett 32-7-7	15 lbs. per 100 gal. Water
Doggett Natural Resource	1/8 lb. per 100 gal. water
Mycor Tree, Tree Saver Pt. Injectable	5 oz. per 100 gal. water

   Apply mixture of fertilizer/soil amendment solution at a rate of 5 gallons of solution for every caliper inch (diameter) of tree trunk measured at breast height (5 gallons per DBH inch). This means a tree measuring 15" in diameter at breast height would require the injection of 75 gallons of solution.

3.21 INSPECTION & ACCEPTANCE

A. When the landscape work is completed, including maintenance, the Landscape Architect will, upon request, make an inspection to determine acceptability. The landscape work may be inspected for acceptance in parts agreeable to the Landscape Architect, provided the work offered for inspection is complete, including maintenance, and that the area comprises a complete unit or area of substantial size.

B. Where inspected landscape work does not comply with the requirements replace rejected work and continue specified maintenance until reinspected by the Landscape Architect and found to be acceptable. Remove rejected plants and material promptly from the project site.

END OF SECTION 32 91 00

SECTION 32 92 19 - SEEDING AND SOIL SUPPLEMENTS

PART 1 – GENERAL

1.1 SECTION INCLUDES

A. In general, Contractor to furnish all materials, labor and equipment in order to achieve the Work of this Specification Section, and as and where indicated on the Contract Drawings.

1.2 RELATED DOCUMENTS

A. Drawings and General Provisions of the Contract, including General and Supplementary Conditions and Division 01 Specification Sections, apply to this Section.

1.3 SUMMARY

A. Under this Section, furnish all labor, materials and equipment necessary to complete the following items of sitework in accordance with the Drawings:

1. Preparation of seed bed and liming, fertilizing, seeding, and mulching as required to produce a uniform, erosion-free stand of grass.
2. Complete topsoil spreading. Provide additional topsoil as necessary.
3. Maintenance and guarantee.

B. Related Sections:

1. Section 31 25 00 – Erosion and Sedimentation Control. To prevent soil erosion and rapid runoff during the construction period, provide temporary grass seed covers on all stacked topsoil piles, and other areas of stockpiled excavated material. Prolonged periods of open, bare earth without grass cover will not be permitted.
2. Section 31 05 00 – Basic Site Materials and Methods: Soil materials.
3. Section 31 22 00 – Grading.
4. Section 32 90 00 – Plantings.

1.4 REFERENCES

A. New York State Department of Transportation: Latest edition of Construction and Material Specifications.

1.5 SUBMITTALS

A. Product Data: Submit Product Data and other technical information in accordance with the General Requirements to fully define the proposed seed blend(s). No work shall commence until submittals have been reviewed and approved for general conformance with the Contract Documents.

1.6 QUALIFICATIONS

A. Regulatory Requirements: Seeding shall be in accordance with local, state, and federal regulations regarding erosion and sedimentation control.

B. Regulatory Requirements: Perform the Work of this Section per the New York State Department of Transportation, latest edition of Construction and Material Specifications referenced above.

1. Exception: As amended, modified, or supplemented herein.

1.7 WARRANTY

A. The Bidders shall include the cost of both of the following in the Base Bid:

1. Guarantee the Work of this Section for one growing season after planting.

2. Guarantee the control of erosion for one year following acceptance the Project by the Owner. Should erosion occur, restore the areas at no additional cost to the Owner.

1.8 MAINTENANCE

A. Maintain (water, mow, and provide weed control) all seeded areas throughout the construction period and repair any and all damage to the same before final inspection.

B. Keep all seeded areas constantly wet for 20 days immediately following seeding and mulching operations.

C. The finished product shall be uniform, healthy and erosion-free.

D. Repair and re-seed all "washouts".

E. Bare spots shall be re-graded and raked to an even grade, then re-seeded and fertilized.

F. In order to gain approval and final acceptance, seed beds shall achieve a uniform ninety (90) percent germination.

PART 2 – PRODUCTS

2.1 MATERIALS

A. All fertilizer, lime, grass seed, and mulch shall conform to the New York State Department of Transportation, latest edition of Construction and Material Specifications.

1. Exception: As noted otherwise herein.

B. Seed Blend for Lawns, Ditches, Embankment Side Slopes, and Back Lot Areas:

1. Perennial types native to the area.

2. Hearty, drought-resistant mixture able to withstand sheet flow and occasional water submergence, not requiring frequent mowing

3. Weed Content: Less than 5 percent.

4. Producing a close stand of grass exhibiting a vigorous, thriving condition upon acceptance by the Owner.

C. Trees: The types indicated on the Drawing, conforming to the New York State Department of Transportation, latest edition of Construction and Material Specifications.

PART 3 – EXECUTION

3.1 PREPARATION

A. Verify that prepared seedbed is ready to receive the Work of this Section.

B. Beginning of installation means acceptance of existing conditions of the Site.

3.2 INSTALLATION

A. Seeding:

1. All areas of the Site disturbed during this Contract, and not indicated to be paved, shall be seeded and mulched.

2. Finish grade area by floating and hand raking to an acceptable smooth even grade. Remove high points and fill low pockets to eliminate the possibility of standing water. All areas shall have positive drainage. Bring finished grades level with adjacent curbs, walks, and existing grades.

3. Fertilizing, liming, seeding, and mulching shall conform to the New York State Department of Transportation, latest edition of Construction and Material Specifications.

a. Contractor's Option: Hydroseeding will be acceptable – if done as a two-step method and approved by the Owner.

B. Trees: All trees shall be dug, planted, staked, fertilized, and mulched in accordance with the New York State Department of Transportation, latest edition of Construction and Material Specifications and as indicated on the Drawings.

1. Trees shall be locally grown.

2. All trees shall be installed in the locations as indicated on the Drawings.

3.3 CLEANING

A. Pressure-wash stained or soiled pavement (concrete, masonry, and/or asphalt) with a power sweeper using water under pressure.

B. At completion of Work, remove all debris, equipment and surplus materials. Leave the Site in a neat and orderly condition.

END OF SECTION 32 92 19

SECTION 33 11 00 - WATER DISTRIBUTION

PART 1 – GENERAL

1.1 SECTION INCLUDES

A. Pipe and fittings for site water lines including domestic water lines and fire water lines.

B. Valves, Fire hydrants, and Domestic water hydrants.

1.2 RELATED SECTIONS

A. Section 31 23 00 - Excavation: Excavating of trenches.

B. Section 31 23 23 - Fill and Backfill: Bedding and backfilling.

C. Section 33 13 00 - Disinfection of Water Distribution System: Disinfection of site service utility water piping.

D. Section 33 42 16 - Manholes and Covers.

E. Section 03 30 00 - Cast-in-Place Concrete: Concrete for thrust restraints.

1.3 REFERENCES

A. AWWA C105/A21.5 - Polyethylene Encasement for Ductile-Iron Pipe Systems; American Water Works Association (ANSI/AWWA C105/A21.5).

B. AWWA C111/A21.11 - Rubber-Gasket Joints for Ductile-Iron Pressure Pipe and Fittings; American Water Works Association (ANSI/AWWA C111/A21.11).

C. AWWA C151/A21.51 - Ductile-Iron Pipe, Centrifugally Cast, for Water; American Water Works Association (ANSI/AWWA C151/A21.51).

D. AWWA C500 - Metal-Seated Gate Valves for Water Supply Service; American Water Works Association.

E. AWWA C504 - Rubber Seated Butterfly Valves; American Water Works Association.

F. AWWA C508 - Swing-Check Valves for Waterworks Service, 2 In. (50 mm) Through 24 In. (600 mm) NPS; American Water Works Association (ANSI/AWWA C508).

G. AWWA C600 - Installation of Ductile-Iron Water Mains and Their Appurtenances; American Water Works Association (ANSI/AWWA C600).

H. AWWA C606 - Grooved and Shouldered Joints; American Water Works Association.

1.4 SUBMITTALS

A. See Section 01 33 00 - Administrative Requirements, for submittal procedures.

B. Product Data: Provide data on pipe materials, pipe fittings, valves and accessories.

C. Manufacturer's Certificate: Certify that products meet or exceed specified requirements.

D. Project Record Documents: Record actual locations of piping mains, valves, connections, thrust restraints, and invert elevations. Identify and describe unexpected variations to subsoil conditions or discovery of uncharted utilities.

1.5 QUALITY ASSURANCE

A. Perform Work in accordance with utility company requirements.

1.6 DELIVERY, STORAGE, AND HANDLING

A. Deliver and store valves in shipping containers with labeling in place.

PART 2 - PRODUCTS

2.1 WATER PIPE

A. Ductile Iron Pipe: AWWA C151:
   1. Fittings: Ductile iron, standard thickness.
   2. Joints: AWWA C111, rubber gasket with rods.
   3. Jackets: AWWA C105 polyethylene jacket.

2.2 VALVES

A. Valves: Manufacturer's name and pressure rating marked on valve body.

B. Gate Valves Up To 3 Inches:
   1. Brass or Bronze body, non-rising stem, inside screw, single wedge or disc, compression ends, with control rod, post indicator, valve key, and extension box.

C. Gate Valves 3 Inches and Over:
   1. AWWA C500, iron body, bronze trim, non-rising stem with square nut, single wedge, flanged ends, control rod, post indicator, valve key, and extension box.

D. Ball Valves Up To 2 Inches:
   1. Brass body, teflon coated brass ball, rubber seats and stem seals, Tee stem pre-drilled for control rod, AWWA inlet end, compression outlet with electrical ground connector, with control rod, valve key, and extension box.

E. Swing Check Valves From 2 Inches to 24 Inches:
   1. AWWA C508, iron body, bronze trim, 45 degree swing disc, renewable disc and seat, flanged ends.

F. Butterfly Valves From 2 Inches to 24 Inches:
   1. AWWA C504, iron body, bronze disc, resilient replaceable seat, water or lug ends, ten position lever handle.

2.3 HYDRANTS

A. Hydrants: Type as per detail and shall be approved by Montvale Fire Department and utility company.

B. Hydrant Extensions: Fabricate in multiples of 6 inches with rod and coupling to increase barrel length.

C. Hose and Streamer Connection: Match sizes with utility company, two hose nozzles, one pumper nozzle.

D. Finish: Primer and two coats of enamel in color required by utility company.

2.4 BEDDING AND COVER MATERIALS

A. Bedding: As specified in Section 31 23 23.

B. Cover: As specified in Section 31 23 23.

2.5 ACCESSORIES

A. Concrete for Thrust Restraints: Concrete type specified in Section 03 30 00.

B. Manhole and Cover: Refer to Section 33 42 16.

PART 3 - EXECUTION

3.1 EXAMINATION

A. Verify that building service connection and municipal utility water main size, location, and invert are as indicated.

3.2 PREPARATION

A. Cut pipe ends square, ream pipe and tube ends to full pipe diameter, remove burrs.

B. Remove scale and dirt on inside and outside before assembly.

C. Prepare pipe connections to equipment with flanges or unions.

3.3 TRENCHING

A. See Sections 31 23 00 and 31 23 23 for additional requirements.

B. Hand trim excavation for accurate placement of pipe to elevations indicated.

C. Form and place concrete for pipe thrust restraints at each change of pipe direction. Place concrete to permit full access to pipe and pipe accessories.

D. Backfill around sides and to top of pipe with cover fill, tamp in place and compact, then complete backfilling.

3.4 INSTALLATION - PIPE

A. Maintain separation of water main from sewer piping in accordance with National Standard Plumbing code.

B. Group piping with other site piping work whenever practical. Maintain minimum 4 ft clearance to underground sanitary piping.

C. Establish elevations of buried piping to ensure not less than 4 ft of cover.

D. Install pipe to indicated elevation to within tolerance of 5/8 inches.

E. Install ductile iron piping and fittings to AWWA C600.

F. Install grooved and shouldered pipe joints to AWWA C606.

G. Route pipe in straight line.

H. Install pipe to allow for expansion and contraction without stressing pipe or joints.

I. Install access fittings to permit disinfection of water system performed under Section 02515.

J. Slope water pipe and position drains at low points.

3.5 INSTALLATION - VALVES AND HYDRANTS

A. Set valves on solid bearing.

B. Center and plumb valve box over valve. Set box cover flush with finished grade.

C. Set hydrants plumb; locate pumper nozzle perpendicular to and facing roadway.

D. Set hydrants to grade, with nozzles at least 20 inches above ground.

E. Locate control valve 48 inches away from hydrant.

F. Provide a drainage pit 36 inches square by 24 inches deep filled with 2 inches washed gravel. Encase elbow of hydrant in gravel to 6 inches above drain opening. Do not connect drain opening to sewer.

G. Paint hydrants in accordance with Section 09 91 13.

3.6 SERVICE CONNECTIONS

A. Provide water service to utility company requirements.

B. Provide sleeve in retaining wall for service main. Support with reinforced concrete bridge. Calk enlarged sleeve watertight.

C. Anchor service main to interior surface of foundation wall.

D. Provide 18 gage galvanized sheet metal sleeve surrounding service main to 6 inches above floor and 6 feet minimum below grade. Size for 2 inches minimum of glass fiber insulation stuffing.

3.7 FIELD QUALITY CONTROL

A. Perform field inspection and testing in accordance with Section 01 45 23.

B. Pressure test water piping to 200 psi.

C. If tests indicate Work does not meet specified requirements, remove Work, replace and retest at no cost to Owner.

END OF SECTION 33 11 00

SECTION 33 13 00 - DISINFECTION OF WATER DISTRIBUTION SYSTEM

PART 1 - GENERAL

1.1 SECTION INCLUDES

A. Disinfection of site domestic water lines and site fire water lines specified in Section 33 11 00.

B. Testing and reporting results.

1.2 RELATED SECTIONS

A. Section 33 11 00 - Water Distribution.

1.3 REFERENCES

A. AWWA B300 - Hypochlorites; American Water Works Association (ANSI/AWWA B300).

B. AWWA B301 - Liquid Chlorine; American Water Works Association (ANSI/AWWA B301).

C. AWWA B302 - Ammonium Sulfate; American Water Works Association.

D. AWWA B303 - Sodium Chlorite; American Water Works Association.

E. AWWA C651 - Disinfecting Water Mains; American Water Works Association (ANSI/AWWA C651).

1.4 SUBMITTALS

A. See Section 01 33 00 - Administrative Requirements, for submittal procedures.

B. Test Reports: Indicate results comparative to specified requirements.

C. Certificate: Certify that cleanliness of water distribution system meets or exceeds specified requirements.

D. Disinfection report:
1. Type and form of disinfectant used.
2. Date and time of disinfectant injection start and time of completion.
3. Test locations.
4. Initial and 24 hour disinfectant residuals (quantity in treated water) in ppm for each outlet tested.
5. Date and time of flushing start and completion.
6. Disinfectant residual after flushing in ppm for each outlet tested.

E. Bacteriological report:
1. Date issued, project name, and testing laboratory name, address, and telephone number.
2. Time and date of water sample collection.
3. Name of person collecting samples.
4. Test locations.
5. Initial and 24 hour disinfectant residuals in ppm for each outlet tested.
6. Coliform bacteria test results for each outlet tested.
7. Certification that water conforms, or fails to conform, to bacterial standards of ANSI/AWWA C651 and the 2020 Plumbing Code of New York State.

1.5 QUALITY ASSURANCE

A. Perform Work in accordance with AWWA C651.

B. Water Treatment Firm: Company specializing in disinfecting potable water systems specified in this Section with minimum three years documented experience.

C. Testing Firm: Company specializing in testing potable water systems, certified by governing authorities of the State in which the Project is located.

D. Submit bacteriologist's signature and authority associated with testing.

PART 2 - PRODUCTS

2.1 DISINFECTION CHEMICALS

A. Chemicals: AWWA B300, Hypochlorite, AWWA B301, Liquid Chlorine, AWWA B302, Ammonium Sulfate, and AWWA B303, Sodium Chlorite.

PART 3 - EXECUTION

3.1 EXAMINATION

A. Verify that piping system has been flushed, inspected, and pressure tested.

B. Schedule disinfecting activity to coordinate with start-up, testing, adjusting and balancing, demonstration procedures, including related systems.

3.2 EXECUTION

A. Provide and attach required equipment to perform the work of this Section.

B. Inject treatment disinfectant into piping system.

C. Maintain disinfectant in system for 24 hours.

D. Flush, circulate, and clean until required cleanliness is achieved; use municipal domestic water.

E. Replace permanent system devices removed for disinfection.

F. Pressure test system to 200 psi. Repair leaks and re-test.

3.3 FIELD QUALITY CONTROL

A. Perform field inspection and testing in accordance with Section 01 40 00.

B. Test samples in accordance with AWWA C651.

END OF SECTION 33 13 00

SECTION 33 30 00 - SANITARY SEWER PIPING

PART 1 - GENERAL

1.1 SECTION INCLUDES

A. Sanitary sewerage piping, fittings, and accessories, including forced mains.

B. Connection of building sanitary system to the sewage lift pump station.

C. Cleanout Access.

1.2 RELATED SECTIONS

A. Section 31 23 00 - Excavation: Excavating of trenches.

B. Section 31 23 23 - Fill and Backfill: Bedding and backfilling.

C. Section 33 42 16 - Manholes and Covers.

D. Section 03 30 00 - Cast-in-Place Concrete: Concrete for cleanout base pad construction.

1.3 REFERENCES

A. ASTM A 746 - Standard Specification for Ductile Iron Gravity Sewer Pipe.

B. ASTM D 2321 - Standard Practice for Underground Installation of Thermoplastic Pipe for Sewers and Other Gravity-Flow Applications.

C. ASTM D 2751 - Standard Specification for Acrylonitrile-Butadiene-Styrene (ABS) Sewer Pipe and Fittings.

D. AWWA C111/A21.11 - American National Standard for Rubber Gasket Joints For Cast Iron and Ductile Iron Pressure Pipe and Fittings. (ANSI/AWWA C111/A21.11)

1.4 SUBMITTALS

A. See Section 01 33 00 - Administrative Requirements, for submittal procedures.

B. Product Data: Provide data indicating pipe, pipe accessories.

C. Manufacturer's Installation Instructions: Indicate special procedures required to install Products specified.

D. Manufacturer's Certificate: Certify that products meet or exceed specified requirements.

E. Project Record Documents:
   1. Record location of pipe runs, connections, catch basins, cleanouts, and invert elevations.
   2. Identify and describe unexpected variations to subsoil conditions or discovery of uncharted utilities.

1.5 PROJECT CONDITIONS

A. Coordinate the Work with termination of sanitary sewer connection outside building, connection to sewer lift pump station, and trenching.

PART 2 – PRODUCTS

2.1 SEWER PIPE MATERIALS

A. Ductile Iron Pipe: ASTM A 746, Pressure Class 350, with asphaltic lining, inside nominal diameter of as indicated on drawings, bell and spigot end.

B. Joint Seals for Ductile Iron Pipe: AWWA C111/A21.11 rubber gaskets.

C. Plastic Pipe: ASTM D 2751, SDR 35, Acrylonitrile-Butadiene-Styrene (ABS) material; inside nominal diameter of 8 inches, bell and spigot style solvent sealed joint end.

D. Joint Seals: Mechanical clamp ring type, stainless steel expanding and contracting sleeve, neoprene ribbed gasket for positive seal.

E. Fittings: Same material as pipe molded or formed to suit pipe size and end design, in required tee, bends, elbows, cleanouts, reducers, traps and other configurations required.

2.2 PIPE ACCESSORIES

A. Trace Wire: Magnetic detectable conductor, brightly colored plastic covering, imprinted with "Sewer Service" in large letters.

2.3 CLEANOUT MANHOLE

A. Lid and Frame: Cast iron construction, hinged lid.:
   1. Lid Design: Open checkerboard grill.
   2. Nominal Lid and Frame Size: 26 inches.

B. Shaft Construction and Concentric Cone Top Section: Reinforced precast Concrete pipe sections, lipped male/female dry joints, cast steel ladder rungs into shaft sections at 12 inches; nominal shaft diameter of 36 inches.

C. Base Pad: Cast-in-place concrete of type specified in Section 03 30 00, levelled top surface to receive concrete shaft sections, sleeved to receive sanitary sewer pipe sections.

2.4 BEDDING AND COVER MATERIALS

A. Pipe Bedding Material: As specified in Section 31 23 23.

B. Pipe Cover Material: As specified in Section 31 23 23.

PART 3 - EXECUTION

3.1 TRENCHING

A. See Sections 31 23 00 and 31 23 23 for additional requirements.

B. Hand trim excavation for accurate placement of pipe to elevations indicated.

C. Backfill around sides and to top of pipe with cover fill, tamp in place and compact, then complete backfilling.

3.2 INSTALLATION - PIPE

A. Verify that trench cut is ready to receive work and excavations, dimensions, and elevations are as indicated on layout drawings.

B. Install pipe, fittings, and accessories in accordance with ASTM D 2321 and manufacturer's instructions. Seal joints watertight.

C. Lay pipe to slope gradients noted on layout drawings; with maximum variation from true slope of 1/8 inch in 10 feet.

D. Connect to building sanitary sewer outlet and sewage lift station, through installed sleeves.

E. Install trace wire 6 inches above top of pipe; coordinate with Section 31 23 23.

3.3 INSTALLATION - CLEANOUTS

A. Form bottom of excavation clean and smooth to correct elevation.

B. Form and place cast-in-place concrete base pad, with provision for sanitary sewer pipe end sections.

C. Establish elevations and pipe inverts for inlets and outlets as indicated.

D. Mount lid and frame level in grout, secured to top cone section to elevation indicated.

3.4 FIELD QUALITY CONTROL

A. Perform field inspection and testing in accordance with Section 01 40 00.

B. If tests indicate Work does not meet specified requirements, remove Work, replace and retest at no cost to Owner.

C. Pressure Test: Test in accordance with 2020 Plumbing Code of New York State.

D. Infiltration Test: Test in accordance with 2020 Plumbing Code of New York State.

E. Deflection Test: Test in accordance with 2020 Plumbing Code of New York State.

3.5 PROTECTION

A. Protect pipe and bedding cover from damage or displacement until backfilling operation is in progress.

END OF SECTION 03 30 00

SECTION 33 40 00 - DRAINAGE AND CONTAINMENT

PART 1 - GENERAL

1.1 SCOPE OF WORK

A. Under this Section of the Specifications the Contractor shall furnish all equipment, materials, labor and services required to complete and shall complete all site drainage work in accordance with the Drawings and Specifications:

1. Storm sewers.
2. Culverts.
3. Underdrains.
4. Catch basins.
5. Manholes.
6. Oil/Water separators.

1.2 RELATED WORK SPECIFIED ELSEWHERE

A. Quality Requirements - See Section 01 40 00.

B. Earthwork. - See Division 31.

C. Sedimentation and Erosion Control - See Section 31 25 00.

D. Water Distribution – See Section 33 11 00.

E. Sanitary Sewerage - See Section 33 30 00.

1.3 GENERAL REQUIREMENTS

A. The Contractor shall visit the site, prior to submitting his bid, inform himself of the conditions and make his own estimates of the facilities and difficulties attending the execution of the work.

B. The Contractor shall be responsible for avoidance and cleanup of street spillage and tracking to the satisfaction of the local and state authorities.

C. The right to make any inspections deemed necessary at the source of supply, and during preparation of any material used in this work, is reserved.

D. The Contractor shall obtain and pay for all permits, tests, inspections, etc., required by agencies that have jurisdiction over the project. All work shall be executed and inspected in accordance with all local and state codes, rules, ordinances, or regulations pertaining to the particular type of work involved. Should any changes in the Contract Drawings and Specifications be required to conform to such ordinances, notify the Owner at the time of submitting bid. After entering into the contract, the Contractor shall be held responsible for the completion of all work necessary for a complete and approved installation without extra expense to the Owner. This Contractor shall prepare any supplementary detailed diagrams or drawings, which may be required by any local or state authority.

1.4 SUBMITTALS

A. Shop Drawings: The Contractor shall submit, in accordance with Section 01300, detailed Shop Drawings for all storm line work.

B. Record Drawings: The Contractor shall submit, prior to final payment, accurate record drawings for all storm line and associated work.

1.5 REGULATORY REQUIREMENTS

All work shall conform to Village of Spring Valley/Town of Ramapo and the 2020 Building Code of New York State standards which shall take precedence over these Specifications in the event of a conflict; however, if the requirements of these Specifications are more stringent, they shall apply.

1.6 QUALITY ASSURANCE

A. Reference Standards:

1. Some products and execution are specified in this Section by reference to published specifications or standards of the following (with respective abbreviation used):
   a. American Association of State Highway and Transportation Officials (AASHTO)
   b. American Society for Testing and Materials (ASTM)
   c. Steel Tank Institute (STI)

PART 2 - PRODUCTS

2.1 PIPE MATERIALS

A. Reinforced concrete pipe, designated on the drawings as RCP, shall conform to ASTM Specification C76, Class IV**,** Wall B, with gasketed joints conforming to ASTM Specification C443.

B. Corrugated polyethylene HDPE pipe.

C. Corrugated metal pipe, designated on the drawings as CMP, shall conform to AASHTO M36. Helical corrugated pipe shall have at least two annular corrugations at each end of each pipe length. Minimum wall thickness shall be 0.064 inches (1.63mm).

2.2 UNDERDRAINS

A. Perforated pipe for underdrains shall be smooth-wall polyvinyl chloride (PVC) perforated pipe conforming to ASTM Specification F758, Type PS46, or approved equivalent. Provide fittings at corners and intersections.

B. Filter fabric for underdrains shall be equal in all respect to Mirafi 140N as manufactured by Mirafi, Inc., Charlotte, NC.

C. Granular filter for underdrains shall be No. 8 gravel or crushed stone conforming to ASTM C33.

2.3 CATCH BASINS AND MANHOLES

A. Catch basins and manholes shall be precast concrete conforming to 2020 Building Code of New York State standard designs and specifications as noted on the Drawings.

B. Catch basins and manholes frames and lids shall conform to 2020 Building Code of New York State standard designs and specifications as noted on the Drawings.

PART 3 - EXECUTION

3.1 INSTALLATION OF PIPES

A. All trench excavations shall be performed in strict accordance with Section 31 23 00.

B. Pipe trenches shall be excavated to the lines and grades shown on the Drawings. Depth of trench shall be as required to provide for the specified bedding materials.

C. Storm sewer pipe shall be set in Class B bedding. Class B bedding shall consist of a bed of ASTM C33, Size No. 67 crushed stone or fractured face aggregate having a thickness of at least 6 inches below the bottom of the pipe and extending up around the pipe for a depth of not less than 30 percent of its outside diameter. The layer of bedding material shall be shaped to fit the conduit for at least 10 percent of the diameter of the conduit and shall have recesses shaped to receive the bell of bell-and-spigot pipe.

D. All pipe trenches shall be backfilled in accordance with Section 31 23 23.

E. The Contractor shall be responsible for protecting all storm sewers and drainage structures from damage due to construction equipment and weather.

3.2 CONSTRUCTION OF CATCH BASINS AND MANHOLES

A. All precast bases shall be placed on a 6 inch bed of No. 67 crushed stone or fractured face aggregate conforming to ASTM C33.

B. Bottom channels shall be formed to the crown of the outlet pipe with concrete in all manholes.

C. All lift holes on all precast elements shall be completely filled with an approved bitumastic material. All joints between all precast elements shall be made with an approved bitumastic material or an approved rubber gasket.

D. Castings shall be set in a full bed of Portland cement mortar.

E. Excavation and backfill shall be as specified herein.

3.3 CLEAN-UP

A. Upon completion of the Work, all surplus materials, debris, tools, and equipment shall be removed from the site.

END OF SECTION 33 40 00

SECTION 33 42 00 - STORM DRAINAGE PIPING

PART 1 - GENERAL

1.1 SECTION INCLUDES

A. Storm drainage piping, fittings, and accessories.

B. Connection of drainage system to municipal sewers.

C. Catch basins, Plant area drains, Paved area drainage, Site surface drainage, Detention basin, and Underground detention system.

1.2 RELATED SECTIONS

A. Section 31 23 00 - Excavation: Excavating of trenches.

B. Section 31 23 23 - Fill and Backfill: Bedding and backfilling.

C. Section 33 42 16 - Manholes and Covers.

D. Section 03 30 00 - Cast-in-Place Concrete: Concrete for cleanout base pad construction.

1.3 REFERENCES

A. ASTM C 76 - Standard Specification for Reinforced Concrete Culvert, Storm Drain, and Sewer Pipe.

B. ASTM C 76M - Standard Specification for Reinforced Concrete Culvert, Storm Drain, and Sewer Pipe (Metric).

C. ASTM C 443 - Standard Specification for Joints for Concrete Pipe and Manholes, Using Rubber Gaskets.

1.4 SUBMITTALS

A. See Section 01 33 00 - Submittal Procedures.

B. Product Data: Provide data indicating pipe, pipe accessories.

C. Manufacturer's Installation Instructions: Indicate special procedures required to install Products specified.

D. Manufacturer's Certificate: Certify that products meet or exceed specified requirements.

E. Project Record Documents:
   1. Record location of pipe runs, connections, catch basins, cleanouts, and invert elevations.

2. Identify and describe unexpected variations to subsoil conditions or discovery of uncharted utilities.

1.5 PROJECT CONDITIONS

A. Coordinate the Work with termination of storm sewer connection outside building, trenching, connection to foundation drainage system and municipal sewer utility service.

PART 2 - PRODUCTS

2.1 SEWER PIPE MATERIALS

A. Concrete Pipe: Reinforced, ASTM C 76 (ASTM C 76M), Class IV with Wall type B; mesh reinforcement; inside nominal diameter of dimension in inches as indicated on drawings, bell and spigot end joints.

B Corrugated polyethylene HDPE pipe.

C. Reinforced Concrete Pipe Joint Device: ASTM C 443 (ASTM C 443M) rubber compression gasket joint.

D. PVC polyvinyl chloride pipe SDR35

2.2 PIPE ACCESSORIES

A. Trace Wire: Magnetic detectable conductor, brightly colored plastic covering, imprinted with "Storm Sewer Service” in large letters.

2.3 CATCH BASIN, CLEANOUT, AND AREA DRAIN COMPONENTS

A. Lids and Drain Covers: Cast iron, hinged to cast iron frame.
   1. Catch Basin:
      a. Lid Design: Linear grill, bicycle safe.
      b. Nominal Lid and Frame Size: 20x36 inch.
   2. Cleanout:
      a. Lid Design: Linear grill, bicycle safe.
      b. Nominal Lid and Frame Size: 20x30 inch.
   3. Area Drain:
      a. Lid Design: Checkerboard grill.
      b. Nominal Lid and Frame Size: 20x36 inch.

B. Shaft Construction and Concentric Cone Top Section: Reinforced precast concrete pipe sections, lipped male/female dry joints, nominal shaft diameter of 24 inches.

C. Base Pad: Cast-in-place concrete of type specified in Section 03300, levelled top surface to receive concrete shaft sections, sleeved to receive storm sewer pipe sections.

2.4 BEDDING AND COVER MATERIALS

A. Bedding: As specified in Section 31 23 23.

B. Cover: As specified in Section 31 23 23.

PART 3 - EXECUTION

3.1 TRENCHING

A. See Section 31 23 00 and Section 31 23 23 for additional requirements.

B. Hand trim excavation for accurate placement of pipe to elevations indicated.

C. Backfill around sides and to top of pipe with cover fill, tamp in place and compact, then complete backfilling.

3.2 INSTALLATION - PIPE

A. Verify that trench cut is ready to receive work and excavations, dimensions, and elevations are as indicated on layout drawings.

B. Install pipe, fittings, and accessories in accordance with manufacturer's instructions. Seal watertight.

C. Lay pipe to slope gradients noted on layout drawings; with maximum variation from true slope of 1/8 inch in 10 feet.

D. Connect to municipal storm sewer system, through installed sleeves.

E. Install continuous trace wire 6 inches above top of pipe; coordinate with Section 31 23 23.

3.3 INSTALLATION - CATCH BASINS AND CLEANOUTS

A. Form bottom of excavation clean and smooth to correct elevation.

B. Form and place cast-in-place concrete base pad, with provision for sanitary sewer pipe end sections.

C. Level top surface of base pad; sleeve concrete shaft sections to receive storm sewer pipe sections.

D. Establish elevations and pipe inverts for inlets and outlets as indicated.

E. Mount lid and frame level in grout, secured to top cone section to elevation indicated.

3.4 FIELD QUALITY CONTROL

A. Perform field inspection and testing in accordance with Section 01 45 23.

B. If tests indicate Work does not meet specified requirements, remove Work, replace and retest at no cost to Owner.

C. Pressure Test: Test in accordance with the 2020 Plumbing Code of New York State.

D. Infiltration Test: Test in accordance with the 2020 Plumbing Code of New York State.

E. Deflection Test: Test in accordance with the 2020 Plumbing Code of New York State.

3.5 PROTECTION

A. Protect pipe and bedding cover from damage or displacement until backfilling operation is in progress.

END OF SECTION 33 42 00

SECTION 33 42 16 - MANHOLES AND COVERS

PART 1 – GENERAL

1.1 SECTION INCLUDES

A. Modular precast concrete manhole sections with tongue-and-groove joints covers, anchorage, and accessories.

1.2 RELATED SECTIONS

A. Section 03 30 00 - Cast-in-Place Concrete.

1.3 REFERENCES

A. ASTM A 48/A 48M - Standard Specification for Gray Iron Castings.

B. ASTM A 123/A 123M - Standard Specification for Zinc (Hot-Dip Galvanized) Coatings on Iron and Steel Products.

C. ASTM C 478 - Standard Specification for Precast Reinforced Concrete Manhole Sections.

D. ASTM C 478M - Standard Specification for Precast Reinforced Concrete Manhole Sections (Metric).

E. ASTM C 923 - Standard Specification for Resilient Connectors Between Reinforced Concrete Manhole Structures, Pipes and Laterals.

F. ASTM C 923M - Standard Specification for Resilient Connectors Between Reinforced Concrete Manhole Structures, Pipes and Laterals (Metric).

PART 2 – PRODUCTS

2.1 MATERIALS

A. Manhole Sections: Reinforced precast concrete in accordance with ASTM C 478 (ASTM C 478M), with resilient connectors complying with ASTM C 923 (ASTM C 923M).

B. Concrete: As specified in Section 03 30 00.

C. Reinforcement: Formed steel wire, unfinished, wire diameter as indicated on drawings.

D. Concrete Reinforcement: As specified in Section 03 30 00.

2.2 COMPONENTS

A. Lid and Frame: ASTM A 48/A 48M, Class 30B Cast iron construction, machined flat bearing surface, removable lockable lid, closed lid design; live load rating of 500 psf; sealing gasket; lid molded with identifying name.

B. Manhole Steps: Formed galvanized steel rungs; 3/4 inch diameter. Formed integral with manhole sections.

C. Strap Anchors: Bent steel shape, 2 x 9 inch size x 1/4 inch thick, unfinished.

2.3 CONFIGURATION

A. Shaft Construction: Concentric with eccentric cone top section; lipped male/female dry joints; sleeved to receive pipe and conduit sections.

B. Shape: Cylindrical.

C. Clear Inside Dimensions: As indicated.

D. Design Depth: As indicated.

E. Clear Lid Opening: 26 inches diameter.

F. Pipe and Conduit Entry: Provide openings as required.

G. Steps: 12 inches wide, 12 inches on center vertically, set into manhole wall.

PART 3 – EXECUTION

3.1 EXAMINATION

A. Verify items provided by other sections of Work are properly sized and located.

B. Verify that built-in items are in proper location, and ready for roughing into Work.

C. Verify excavation for manholes is correct.

3.2 PREPARATION

A. Coordinate placement of inlet and outlet pipe or duct sleeves required by other sections.

3.3 MANHOLES

A. Place concrete base pad, trowel top surface level.

B. Place manhole sections plumb and level, trim to correct elevations, anchor to base pad.

C. Cut and fit for pipe, conduit, and sleeves.

D. Grout base of shaft sections to achieve slope to exit piping. Trowel smooth. Contour as required.

E. Set cover frames and covers level without tipping, to correct elevations.

F. Coordinate with other sections of work to provide correct size, shape, and location.

3.4 SCHEDULES

A. Storm Sewer Manholes: Precast concrete sections, galvanized steel steps, 48 inch inside dimension, to depth indicated, with bolted lid.

END OF SECTION 33 42 16

SECTION 33 46 00 – SUBDRAINAGE

PART 1 - GENERAL

1.1 SECTION INCLUDES

A. Building Perimeter, Retaining Wall, and Under-Slab Drainage Systems.

B. Filter aggregate and fabric and bedding.

1.2 RELATED SECTIONS

A. Section 31 23 00 - Excavation: Excavating for subdrainage system piping and surrounding filter aggregate.

B. Section 31 23 23 - Fill and Backfill: Backfilling over filter aggregate, up to subgrade elevation.

1.3 REFERENCES

A. ASTM D 2729 - Standard Specification for Poly(Vinyl Chloride) (PVC) Sewer Pipe and Fittings.

1.4 SUBMITTALS

A. See Section 01 33 00 - Submittal Procedures.

B. Product Data: Provide data on pipe drainage products and pipe accessories.

C. Manufacturer's Certificate: Certify that products meet or exceed specified requirements.

D. Project Record Documents: Record location of pipe runs, connections, cleanouts and principal invert elevations.

PART 2 - PRODUCTS

2.1 PIPE MATERIALS

A. Polyvinyl Chloride Pipe: ASTM D 2729; plain end with required fittings.

B. Use perforated pipe at subdrainage system; unperforated through sleeved walls.

2.2 AGGREGATE AND BEDDING

A. Filter Aggregate and Bedding Material: Granular fill as specified in Section 31 23 23.

2.3 ACCESSORIES

A. Pipe Couplings: Solid plastic.

B. Filter Fabric: Water pervious type, black polyolefin.

PART 3 - EXECUTION

3.1 EXAMINATION

A. Verify that trench cut is ready to receive work and excavations, dimensions, and elevations are as indicated on layout Drawings.

3.2 PREPARATION

A. Hand trim excavations to required elevations. Correct over-excavation with granular fill as specified in Section 31 23 23.

B. Remove large stones or other hard matter which could damage drainage piping or impede consistent backfilling or compaction.

3.3 INSTALLATION

A. Install and join pipe and pipe fittings in accordance with pipe manufacturer's instructions.

B. Place drainage pipe on clean cut subsoil.

C. Lay pipe to slope gradients noted on Drawings; with maximum variation from true slope of 1/8 inch in 10 feet.

D. Place pipe with perforations facing down. Mechanically join pipe ends.

E. Install pipe couplings.

F. Install filter aggregate at sides, over joint covers and top of pipe. Provide top cover compacted thickness of 12 inches.

G. Place filter fabric over leveled top surface of aggregate cover prior to subsequent backfilling operations.

H. Place aggregate in maximum 6 inch lifts, consolidating each lift.

I. Refer to Section 31 23 23 for compaction requirements. Do not displace or damage pipe when compacting.

J. Connect to storm sewer system with unperforated pipe, through installed sleeves.

K. Coordinate the Work with connection to municipal sewer utility service, and trenching.

3.4 PROTECTION

A. Protect pipe and aggregate cover from damage or displacement until backfilling operation begins.

END OF SECTION 33 46 00

SECTION 33 52 16 - NATURAL GAS DISTRIBUTION

PART 1 – GENERAL

1.1 SCOPE OF WORK

In general, the Contactor shall furnish all labor, equipment and materials necessary to accomplish the Work of this Specification Section and as noted on the Contract Drawings.

1.2 RELATED DOCUMENTS

A. Drawings and general provisions of the Contract, including General and Supplementary Conditions and Division 01 Specification Sections, apply to this Section.

1.3 SUMMARY

A. Section Includes:

1. Material, labor, tools, equipment, and services necessary for and incidental to the provision of gas service, including – but not limited to:

a. Installation of a 6 inch NPS polyethylene underground gas service line (with tracer wire) from the local natural gas company's existing service stub to a new regulator located at the building and other variously sized gas service connections as indicated on the Drawings.

b. Installation of detectable underground marking tape above new polyethylene line.

c. Excavation and fill, testing, and incidentals necessary to complete the Work.

B. Related Sections:

1. Division 31 – Earthwork: Specifies trench excavation, excavation below the trench subgrade, and trench backfill.

2. Division 23 – HVAC: Intermediate pressure gas service regulator – coordinate with HVAC Contractor.

1.4 REFERENCES

A. American National Standards Institute (ANSI): Building Services Piping (ANSI B-31.9).

B. American National Standards Institute (ANSI) / American Water Works Association (AWWA): Polyethylene Encasement for Ductile-Iron Piping Systems (ANSI A-21.5 / AWWA C-105-99).

C. ASTM International:

1. Standard Specification for Pipe, Steel, Black and Hot-Dipped, Zinc-Coated, Welded and Seamless (ASTM A-53 / A-53M-00).

2. Standard Specification for Piping Fittings of Wrought Carbon Steel and Alloy Steel for Moderate and High Temperature Service (ASTM A-234 / A-234M-00a).

3. Standard Test Method for Melt Flow Rates of Thermoplastics by Extrusion Plastometer (ASTM D-1238-04a).

4. Standard Test for Resistance to Short-Time Hydraulic Pressure of Plastic Pipe, Tubing, and Fittings (ASTM D-1599-99e1).

5. Standard Test Method for Environmental Stress-Cracking of Ethylene Plastic (ASTM D-1693-01). 6. Standard Test Method for Obtaining Hydrostatic Design Basis for Thermoplastic Pipe Materials (ASTM D-2837-04).

7. Standard Specification for Polyethylene Plastics Pipe and Fittings Materials (ASTM D-3350-02a).

D. American Society of Mechanical Engineers (ASME): Malleable Iron Threaded Fittings (ASME B-16.3).

E. National Fire Protection Association (NFPA): National Fuel Gas Code (NFPA 54).

F. The Plastic Pipe Institute (PPI): Polyethylene Pipe Standards.

1.5 DEFINITIONS

A. The dimensionless designator NPS (nominal pipe size) has been substituted in this Section for such traditional terms as nominal diameter, size, and nominal size.

B. The Drawings:

1. The Work shown on the Drawings is intended to be approximately to scale with the exception of details noted "No Scale" or "Not to Scale."

2. The Drawings show sizes of piping and runs of piping, but are not intended to show every pipe run, offset, fitting, and device, nor structural difficulty that might be encountered.

3. Provide parts necessary to make complete working systems ready for use as required to carry out the true intent and purpose of the Drawings.

1.6 SUBMITTALS

A. Product Data and Shop Drawings: Submit six copies of Manufacturer's cuts, catalog cuts, working drawings, certified test reports, performance data, and the like, for each of the following in accordance with the GENERAL REQUIREMENTS for review including certificates

indicated. Mark each item, making reference to the applicable page and paragraph numbers of the Specifications prior to submittal. Deliver as one complete package.

1. Polyethylene gas service line, fittings, joints, couplings, and gaskets.
2. Steel gas service line, fittings, joints and couplings.
3. Gas valves.
4. Steel piping, fittings, joints, couplings, and adapters.
5. Other materials specified under this Section.

B. Quality Control Submittals: Submit certificates of compliance and shop tests for review:

C. Contract Closeout Submittals:

1. Operation and Maintenance Data: Submit the following for review:

a. Recommended Spare Parts List.
b. Maintenance, Operation and Service Manuals.

2. Final Certification: Upon completion of the Project and before final acceptance, provide a statement signed by the principal officer of the contracting firm stating that the gas service piping:

a. Is satisfactory.
b. Is in complete accordance with the Drawings, the Specifications, and the Manufacturer's prescribed procedures.
c. Has been found to be tight.
d. In compliance with all state and local codes covering such installations.

1.7 QUALITY ASSURANCE

A. Regulatory Requirements:

1. Accomplish the Work in accordance with the laws, ordinances, regulations, and codes of New York State**,** the local natural gas company, and other local, county, state, or federal authorities having jurisdiction (AHJ) and the applicable requirements of NFPA 54.

2. Obtain and pay for all necessary inspection fees, certificates, and permits pertinent to the construction and installation of the gas service system.

3. Conform welding procedures to applicable state labor regulations.

B. Certifications:

1. Contractor performing installation shall be certified to do so by the local natural gas company.
2. Welders shall be certified in accordance with Section 9 of ANSI B-31.9.

1.8 DELIVERY, STORAGE, AND HANDLING

A. Coordinate the delivery and receipt of equipment and materials at the Site so that installation is made in proper sequence and with a minimum loss of time.

B. Inspect materials delivered to the Site for damage.

C. Unload materials with a minimum of handling.

D. Provide suitable means of protection for materials intended to be used in the Work. Store materials at the Site in enclosures or under protective covering. Do not store materials directly on the ground.

1. Store polyethylene piping under cover out of direct sunlight.
2. Keep inside of pipes and fittings free of dirt and debris.

E. Handle pipe, fittings, valves, and other accessories in such a manner as to ensure delivery to the trench in sound undamaged condition.

1. Take special care to avoid injury to coatings and linings on pipe and fittings. Make satisfactory repairs if coatings or linings are damaged.

F. From the commencement of the Work until its completion and acceptance by the Owner, the Contractor shall be solely responsible for:

1. Storage and care of required equipment and materials.
2. Injury or damage to the same, from whatever cause. Damage shall be repaired by the Contractor at the Contractor's own expense, before final payment is made.

1.9 SEQUENCING AND SCHEDULING

A. Coordination: Arrange the Work so that there will not be any delay in the proper installation and completion of any part or parts of the gas service system.

1.10 WARRANTY

A. Name the Owner on the Manufacturer's guarantee and submit in accordance with the General Requirements.

PART 2 – PRODUCTS

2.1 MATERIALS

A. General: Materials and equipment provided by the Contractor for use in this Contract shall be new and suitable for conditions and duties imposed on them after installation. Where applicable, materials and equipment shall bear the approval label of the Underwriters Laboratories, Incorporated (UL).

2.2 POLYETHYLENE GAS SERVICE LINE AND HOUSE LINE

A. Melt Flow: Less than 5.0 gms/ten minutes in accordance with ASTM D-1238.

B. Resistance to Environmental Stress-Cracking: Exceeding 1,000 hours in accordance with ASTM D-1693.

C. Hydrostatic Design Stress Rating: 730 PSI in accordance with ASTM D-2837.

D. Burst Pressure: 560 PSI (minimum) at 73.4 degrees Fahrenheit in accordance with ASTM D-1599.

E. Mold or fabricate fittings from high-density polyethylene (HDPE).

F. Join pipes to one another by the thermal butt fusion system.

G. Fittings shall be solvent welded.

H. Acceptable Product: 6 inch NPS DRISCOPIPE 8100 gas service pipe as manufactured by Phillips 66 or approved equal; meeting the requirements of PE-3455446 and PPI-PE-3408 in accordance with ASTM D-3350.

2.3 DETECTABLE UNDERGROUND MARKING TAPE

A. Provide underground polyethylene gas service piping with a detectable underground marking tape buried approximately 8 inches below finished grade.

B. Tape shall be color coded for gas service with a coated imprinted message and reinforced protective plastic jacket bonded to a foil core (detectable). Tape shall be 9.1-mils thick with a tensile strength of 135 pounds for a 3 inch tape. Warning and identification shall be "Caution Buried Gas Line Below" or similar wording. Tape shall be Terra-Tape Sentry-Line, as manufactured by Reef Industries of Houston TX, or approved equal.

2.4 GAS VALVES

A. Service line valves shall be rated by the Manufacturer to operate at a minimum of 100 PSIG.

2.5 PIPING, BURIED

A. Use steel piping where shown on the Drawings.

B. Buried and aerial steel pipe shall be black steel in accordance with ASTM A-53 or ASTM A-53, Schedule 40.

C. Fittings shall be ASTM A-234 / A-234M forged steel, welding type, with polyethylene jacket in accordance with ANSI A21.5 / AWWA C-105, or double layer, half-lapped 10 mil thick polyethylene tape.

D. Weld joints in accordance with ANSI B-31.9.

2.6 PIPING, ABOVE GROUND

A. Gas service piping above ground shall be black steel in accordance with ASTM A-53, Schedule 40.

B. Fittings shall be malleable iron threaded fittings in accordance with ASME B-16.3.

C. Joints shall be in accordance with NFPA 54, threaded in accordance with ANSI B-31.9.

D. Paint pipe and fittings with one coat of primer and two coats of epoxy paint.

E. Pipe passing through wall or floor sleeves shall be wrapped with tape approved by the local natural gas company at least 2 inches beyond inside and outside of wall and 8 inches above grade.

2.7 WELDING MATERIALS

A. Conform to ANSI B-31.9.

PART 3 – EXECUTION

3.1 EXAMINATION

A. Verification of Conditions: Inspect the Site and perform any test pit investigations as might be required to verify location and depth of existing utilities and/or subsurface structures within the areas of the Work.

3.2 PREPARATION

A. Maintain Existing Utilities: Exercise utmost care to avoid damage to electric, telephone, sewer and water lines, roads, and all appurtenances thereto.

3.3 INSTALLATION

A. General:

1. Furnish materials, perform excavation and fill, construct necessary joints and connections, construct appurtenances, dispose of surplus excavation, and discard materials as necessary to complete the gas service system.

2. Install materials and equipment complete in a first class manner and in accordance with modern methods and practice.
   a. Installed material or equipment that does not present an orderly and reasonably neat or workmanlike appearance shall be removed and replaced when directed by the Owner. Such removal and replacement shall be done at the Contractor's expense.

3. Install equipment in accordance with the manufacturer's recommendations and requirements of the local natural gas company.
   a. Positioning of equipment shall be performed in a manner to prevent marring, scratching, gouging, or any other damage or deformation to the equipment.
   b. Install and securely anchor equipment plumb, level, and true to line for proper operation.

4. Pile excavated material in a manner that will not endanger the Work and will not obstruct access to the Site.

5. Keep gutters and ditches clear at all times or make other satisfactory provisions. Do not obstruct drainage of natural watercourses.

6. The following items might cause a hazard or serve as an obstruction to either vehicular or pedestrian traffic. To protect persons from injury and to avoid property damage, enclose the following using fences or barricades and complement with adequate lighting:
   a. Trenches.
   b. Excavated pits
   c. Equipment.
   d. Pipe and other materials.

7. Temporarily support, adequately protect, and otherwise maintain underground utilities and surface structures, and other obstructions encountered in the progress of the Work.

8. Removal of Water: At all times during construction, provide proper and satisfactory means and devices for the removal of water entering the excavated area. Remove such water as fast as it may collect to avoid interference with the prosecution of the Work (the proper placing of pipe, masonry or other materials).

B. Trenching:

1. Handle the joined pipeline in such a manner that the pipe is not damaged by being dragging over sharp and cutting objects. Sections of the pipes with deep cuts and gouges shall be cut out, and the ends of the pipeline rejoined.

2. Place pipe in sand or pea gravel bedding material as detailed on the Drawings.

3. The trench bottom shall be free of stumps, stones, boulders, rocks, frozen clods, and similar objects. Where trench is made through rock, excavate to 8 inches below proposed grade and backfill to grade with compacted materials acceptable to the Architect/Engineer.

4. Perform butt fusion of pipes and fittings in accordance with the Pipe Manufacturer's recommendations as to equipment and technique.

5. Keep pipe trenches free of water and as dry as possible during bedding, laying and jointing and for as long a period as required.

6. When the Work is not in progress, open ends of pipe and fittings shall be satisfactorily closed so that no trench water or other material enters the pipe or fittings.

7. As soon as possible after the joint is made, place sufficient backfill material along the pipe to prevent pipe movement off line or grade.

3.4 FIELD QUALITY CONTROL

A. Tests:

1. General:
   a. Conduct testing in the presence of the Independent Testing Laboratory (ITL) and local and State inspectors having jurisdiction. Give sufficient advance notice of conducting such tests.
   b. Furnish required labor, tools, materials, and equipment for such tests, including pumps, compressors, stopwatch, gauges and meters, subject to acceptance by the ITL.
   c. If any imperfections or leaks are detected by the tests, they shall be corrected by repair or replacement of defective materials as directed by the local natural gas company or the ITL, and then re-tested.

2. Piping: Test gas service line in accordance with NFPA 54 to 150 percent of maximum system pressure or 90 PSIG (whichever is greater). Chart results over a 24-hour period.

3. Trench excavation, trench backfill, and excavation below trench subgrade shall be as described in Section 31 20 00 – Earthmoving of these Specifications and as shown on the plan details.

3.5 PROTECTION

A. Provide suitable means of protection for the completed Work.

END OF SECTION 33 52 16

SECTION 34 71 00 - WALK AND ROAD APPURTENANCES

PART 1 - GENERAL

1.1 SCOPE OF WORK

A. Under this Section of the Specifications the Contractor shall provide all labor, materials, tools, and equipment necessary to complete the following items of work in accordance with the Drawings:

1. Wood and Steel Guardrail

1.2 SUBMITTALS

A. Shop Drawings and Product Data: The Contractor shall submit, in accordance with Section 01 33 00, detailed drawings and technical data of all types of precast parking bumpers and guardrail materials.

B. Testing Data for bumpers concrete.

C. Certification of structural steel members incorporated into the work of this section.

1.3 REFERENCE STANDARDS

A. Some products and execution are specified in this Section by reference to published specifications or standards of the following (with respective abbreviation used):

1. American Association of State Highway and Transportation Officials (AASHTO)
2. American Society for Testing and Materials (ASTM)

PART 2 - PRODUCTS

2.1 PRECAST PARKING BUMPERS

A. See Drawings for parking bumper dimensions. Provide bumpers as follows:

1. Automobile bumpers: 6 feet minimum length, cross sectional profile as detailed.

B. Detailed dimensions may be varied slightly to conform to local availability when approved by the Project Manager.

C. Bumpers shall be reinforced with two #4 bars, containing drainage slots and anchor rod holes as detailed on the Drawings.

D. Anti-spalling treatment shall be as manufactured by the Continental Products Company, Cleveland, Ohio.

2.2 GUARDRAIL

A. Wooden guardrail posts and blocks shall be construction grade (stress grade of 1,2000 psi or more) posts and timbers, or better, as rated by the West Coast Lumber Inspection Bureau, and shall be fabricated from the following timber species, Douglas

Fir, Western Pine, Larch, or Hemlock. Posts shall receive a preservative treatment in accordance with AASHTO M 133. Only one combination of post and block finish shall be used for any continuous length of guardrail.

B. All fittings, bolts, washers and other accessories shall be galvanized in accordance with the requirements of AASHTO M, or AASHTO M 232, whichever may apply. All galvanizing shall be done after fabrication.

C. Bolts and nuts shall be galvanized steel conforming to ASTM A 153, Class C and ASTM A 307.

D. Concrete for anchors shall meet the requirements of Section 03302 - Concrete Structures Concrete for anchors shall meet the requirements of Section 03302 - Concrete Structures.

E. Paint for galvanized coating repair shall be "Zinc Clad II Ethyl Silicate" as manufactured by Sherwin Williams Ind. & Marine Coatings, or "Cold Galvanized Product No. 7002, 7007, 7008 & 7009 and Galva Bright Product No. 7707, 7708 & 7709," as manufactured by Crown North American Professional Products.

PART 3 - EXECUTION

3.1 PARKING BUMPER INSTALLATION

A. Parking bumpers shall be anchored by driving rods through preformed holes in the bumpers and into the pavement. See Drawings for anchor lengths.

B. All precast bumper blocks shall receive two coats of anti-spalling treatment applied in strict accordance with the manufacturer's instructions.

3.2 GUARDRAIL INSTALLATION

A. Guardrail shall be installed where shown on the Drawings. Post spacing shall be six feet three inches (10’-0”).

B. Top of guardrail shall be set at 27 inches above the finished grade unless noted otherwise on the Drawings.

C. Posts shall be set in drilled holes and backfilled to grade with concrete that achieves a 28 day compressive strength of 3000 PSI.

D. Guardrail posts shall be set plumb. When the Drawings require that the ends of a section of guardrail be curved outward or downward, the posts shall be set to accommodate the curve. The posts shall be backfilled with acceptable material and thoroughly compacted to the satisfaction of the ENGINEER. Any damage to the posts, pavement, shoulders and adjacent slopes resulting from post driving shall be repaired at the CONTRACTOR's expense.

E. The rail element shall be erected according to the Drawings in a manner resulting in a smooth, continuous installation with laps in the direction of traffic flow.

F. All metal work shall be fabricated in the shop. No punching, cutting, or welding shall be done in the field, except that holes necessary when additional posts are required, or for special details in extraordinary cases, may be drilled in the field when

approved by the ENGINEER. The rail shall be erected so that the bolts at expansion joints will be located at the centers of the slotted holes. Field-drilled holes shall be treated in accordance with AASHTO M 36.

G. Rails on curves with a radius of 150' or less shall be shop bent.

H. All bolts shall be drawn tight and extend at least one-fourth-inch beyond the nuts. Except where required for adjustments, bolts shall not extend more that one-half-inch beyond the nuts. Where the spelter coat on galvanized rail or post elements has been damaged, repairs to the spelter coat shall be made in accordance with AASHTO M 36.

3.3 CLEAN-UP

A. Upon completion of the Work, all surplus materials, debris, tools, and equipment shall be removed from the site.

END OF SECTION 34 71 00