WESTCHESTER JOINT WATER WORKS
MAMARONECK, NEW YORK

A1364-A: RYE LAKE WATER FILTRATION PLANT
30 MGD
HARRISON, NY
BID SET

FEBRUARY 2025

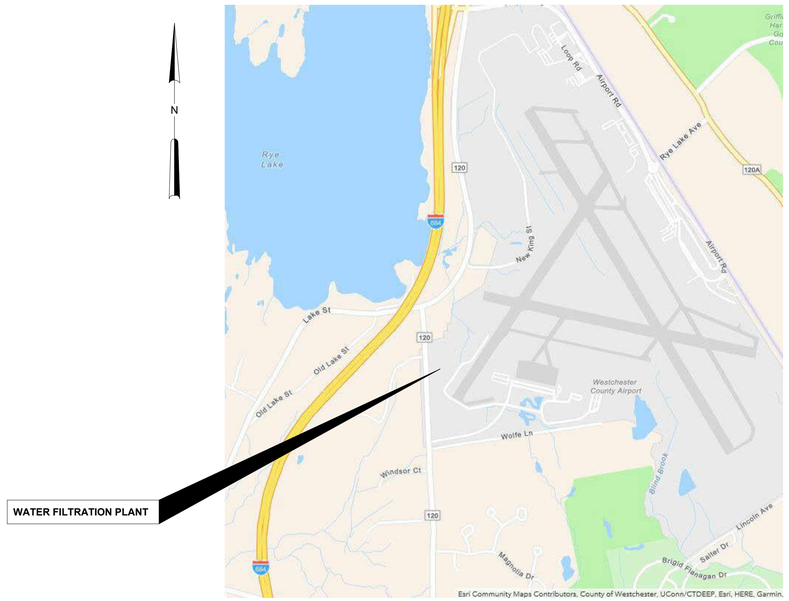

LOCATION PLAN
NOT TO SCALE

STATE OF NEW YORK
EDWARD J. McCARTHY
085018
LICENSED PROFESSIONAL ENGINEER

Hazen

HAZEN AND SAWYER
498 SEVENTH AVENUE, 11th FLOOR
NEW YORK, NEW YORK 10018

WARNING
IT IS A VIOLATION OF SECTION 7209.2 OF THE NEW YORK STATE EDUCATION LAW FOR ANY PERSON, UNLESS ACTING UNDER THE DIRECTION OF A LICENSED PROFESSIONAL ENGINEER, TO ALTER IN ANY WAY PLANS, SPECIFICATIONS, PLATS OR REPORTS TO WHICH THE SEAL OF A PROFESSIONAL ENGINEER HAS BEEN APPLIED. IF AN ITEM BEARING THE SEAL OF A PROFESSIONAL ENGINEER IS ALTERED, THE ALTERING ENGINEER SHALL AFFIX TO THE ITEM HIS SEAL AND THE NOTATION "ALTERED BY" FOLLOWED BY HIS SIGNATURE, THE DATE, AND A SPECIFIC DESCRIPTION OF THE ALTERATION.

G-001

NO.	DWG	TITLE	INCLUDED
		GENERAL	
1	G-001	COVER	X
2	G-002	DRAWING INDEX - SHEET 1	X
3	G-003	DRAWING INDEX - SHEET 2	X
4	G-004	GENERAL NOTES, SYMBOLS AND ABBREVIATIONS	X
5	G-005	GENERAL AREA DESIGNATION TABLES	X
6	G-010	HYDRAULIC PROFILE	X
7	G-011	PROCESS FLOW SCHEMATIC	X
8	G-100	GENERAL ARRANGEMENT PLAN EL 384.00	X
9	G-101	GENERAL ARRANGEMENT PLAN EL 407.00	X
10	G-102	GENERAL ARRANGEMENT PLAN EL 421.00	X
11	G-103	GENERAL ARRANGEMENT PLAN ROOF	X
		DEMOLITION	
12	D-500	EXISTING RYE LAKE CHEMICAL BUILDING DEMOLITION PLAN BELOW EL 358.50'	X
13	D-501	EXISTING RYE LAKE CHEMICAL BUILDING DEMOLITION PLAN EL 358.50	X
		CIVIL	
14	C-001	GENERAL NOTES, LEGEND AND ABBREVIATIONS	X
15	C-101	OVERALL SITE PLAN	X
16	C-102	EXISTING CONDITIONS AND DEMOLITION PLAN -AREA 1	X
17	C-103	EXISTING CONDITIONS AND DEMOLITION PLAN -AREA 2	X
18	C-111	EROSION AND SEDIMENT CONTROL PHASING PLAN - PHASE I	X
19	C-112	EROSION AND SEDIMENT CONTROL PHASING PLAN - PHASE II	X
20	C-113	EROSION AND SEDIMENT CONTROL PHASING PLAN - PHASE III	X
21	C-114	EROSION AND SEDIMENT CONTROL PHASING PLAN - PHASE IV	X
22	C-115	EROSION AND SEDIMENT CONTROL PHASING PLAN - PHASE V	X
23	C-121	GRADING AND DRAINAGE PLAN - AREA 1	X
24	C-122	GRADING AND DRAINAGE PLAN - AREA 2	X
25	C-131	YARD PIPING PLAN - AREA 1	X
26	C-132	YARD PIPING PLAN - AREA 2	X
27	C-141	FINAL SITE PLAN - AREA 1	X
28	C-142	FINAL SITE PLAN - AREA 2	X
29	C-151	STAKING PLAN - AREA 1	X
30	C-152	STAKING PLAN - AREA 2	X
31	C-153	STAKING TABLES	X
32	C-201	PLANT ACCESS DRIVEWAY PLAN AND PROFILE	X
33	C-202	PLANT ACCESS ROAD PLAN AND PROFILE - STA 10+00 TO STA 14+50	X
34	C-203	PLANT ACCESS ROAD PLAN AND PROFILE - STA 14+50 TO STA 20+20	X
35	C-204	VEGETATED ACCESS ROAD PLAN AND PROFILE -SHEET 1 OF 2	X
36	C-205	VEGETATED ACCESS ROAD PLAN AND PROFILE -SHEET 2 OF 2	X
37	C-206	ROADWAY DETAILS	X
38	C-211	STORMWATER MANAGEMENT PLAN	X
39	C-212	STORMWATER MANAGEMENT CROSS SECTIONS	X
40	C-213	STORMWATER DRAINAGE PROFILES -SHEET 1 OF 3	X
41	C-214	STORMWATER DRAINAGE PROFILES -SHEET 2 OF 3	X
42	C-215	STORMWATER DRAINAGE PROFILES -SHEET 3 OF 3	X
43	C-216	STORMWATER DETAILS - SHEET 1 OF 6	X
44	C-217	STORMWATER DETAILS - SHEET 2 OF 6	X
45	C-218	STORMWATER DETAILS - SHEET 3 OF 6	X
46	C-219	STORMWATER DETAILS - SHEET 4 OF 6	X
47	C-220	STORMWATER DETAILS - SHEET 5 OF 6	X
48	C-221	STORMWATER DETAILS - SHEET 6 OF 6	X
49	C-231	SANITARY DRAIN PLAN AND PROFILE	X
50	C-232	SANITARY FM - STA 0+00 TO STA 5+00	X
51	C-233	SANITARY FM - STA 5+00 TO STA 9+29	X
52	C-234	SANITARY AND STORM DRAIN DETAILS	X
53	C-241	RAW WATER TRANSMISSION MAIN PLAN AND PROFILE	X
54	C-242	FINISHED WATER TRANSMISSION MAIN PLAN AND PROFILE - SHEET 1 OF 2	X
55	C-243	FINISHED WATER TRANSMISSION MAIN PLAN AND PROFILE - SHEET 2 OF 2	X
56	C-244	WATER MAIN EXTENSION PROFILE	X
57	C-245	PW AND FP PROFILES	X
58	C-246	WWR AND FUD PROFILE	X
59	C-247	OVERFLOW PROFILE - SHEET 1 OF 2	X
60	C-248	OVERFLOW PROFILE - SHEET 2 OF 2	X
61	C-249	WWW PROFILE	X
62	C-250	GALLERY DRAIN PROFILE	X
63	C-251	YARD PIPING DETAILS - SHEET 1 OF 2	X
64	C-252	YARD PIPING DETAILS - SHEET 2 OF 2	X
65	C-301	EROSION AND SEDIMENT CONTROL NOTES	X
66	C-302	EROSION AND SEDIMENT CONTROL DETAILS	X
67	C-303	EROSION AND SEDIMENT CONTROL DETAILS	X
68	C-304	SITE DETAILS	X
69	C-305	TRUCK DELIVERY CONTAINMENT DETAIL	X
70	C-306	MAINTENANCE OF TRAFFIC DETAIL	X
71	L-101	PLAN - SHEET 1	X
72	L-102	PLAN - SHEET 2	X
73	L-301	SCHEDULE	X
74	L-302	DETAILS	X
		ARCHITECTURAL	
75	A-001	STANDARD NOTES, SYMBOLS AND ABBREVIATIONS	X
76	A-002	CODE COMPLIANCE SUMMARY 1 OF 3	X
77	A-003	CODE COMPLIANCE SUMMARY 2 OF 3	X
78	A-004	CODE COMPLIANCE SUMMARY 3 OF 3	X
79	A-005	NOTES -SHEET 1 of 2	X
80	A-006	NOTES -SHEET 2 of 2	X
81	A-101	BASEMENT PLAN EL 383.00	X
82	A-102	FIRST FLOOR PLAN EL 407.00	X
83	A-103	SECOND FLOOR PLAN EL 421.00	X
84	A-104	ROOF PLAN	X
85	A-201	EXTERIOR ELEVATIONS -SHEET 1 OF 2	X
86	A-202	EXTERIOR ELEVATIONS -SHEET 2 OF 2	X
87	A-203	BUILDING SECTIONS -SHEET 1 OF 4	X
88	A-204	BUILDING SECTIONS -SHEET 2 OF 4	X
89	A-205	BUILDING SECTIONS -SHEET 3 OF 4	X
90	A-206	BUILDING SECTIONS -SHEET 4 OF 4	X
91	A-207	WALL SECTION & DETAILS -SHEET 1 OF 3	X
92	A-208	WALL SECTION & DETAILS -SHEET 2 OF 3	X
93	A-209	WALL SECTION & DETAILS -SHEET 3 OF 3	X
94	A-301	FIRST FLOOR -ENLARGED PLAN AND RCP	X
95	A-302	FIRST FLOOR -INTERIOR ELEVATIONS	X
96	A-303	SECOND FLOOR -ENLARGED PLAN AND RCP	X
97	A-304	SECOND FLOOR -INTERIOR ELEVATIONS	X
98	A-305	PROCESS ANALYSIS AND CONTROL ROOM - ENLARGED PLANS AND RCP	X
99	A-306	PROCESS ANALYSIS AND CONTROL ROOM - INTERIOR ELEVATIONS	X
100	A-307	ELEVATOR PLANS, SECTION AND DETAILS	X
101	A-308	STAIR PLANS, SECTIONS AND DETAILS - SHEET 1 OF 2	X
102	A-309	STAIR PLANS, SECTIONS AND DETAILS - SHEET 2 OF 2	X
103	A-401	STAIR AND RAILING DETAILS	X
104	A-402	PLAN DETAILS	X
105	A-403	ROOF DETAILS -SHEET 1 OF 2	X
106	A-404	ROOF DETAILS -SHEET 2 OF 2	X
107	A-501	SITE ENTRANCE PLAN AND DETAILS	X
108	A-601	PARTITION TYPES AND DETAILS	X
109	A-602	WINDOW SCHEDULE AND DETAILS	X
110	A-603	DOOR SCHEDULE AND DETAILS	X
111	A-604	FINISH, IDENTIFYING DEVICES AND LOUVER SCHEDULES AND DETAILS	X
112	A-605	IDENTIFYING DEVICES	X
113	A-606	FIRESTOPPING DETAILS	X
		STRUCTURAL	
114	S-001	GENERAL NOTES	X
115	S-002	LOAD DIAGRAMS	X
116	S-100	SOIL TIEDOWN PLAN AREA 1, 2, AND 3	X
117	S-101	SOIL TIEDOWN PLAN AREA 4 AND 5	X
118	S-102	PLAN AT EL 374.08 - AREA 4 AND 5	X
119	S-103	PLAN AT EL 383.00 - AREA 1	X
120	S-104	PLAN AT EL 383.00 - AREA 2	X
121	S-105	PLAN AT EL 383.00 - AREA 3	X
122	S-106	PLAN AT EL 398.83 - AREA 1 AND 4	X
123	S-107	PLAN AT EL 398.83 - AREA 2 AND 5	X
124	S-108	PLAN AT EL 407.00 - AREA 1	X
125	S-109	PLAN AT EL 407.00 - AREA 2	X
126	S-110	PLAN AT EL 407.00 - AREA 3 AND FLOOR SLOPE PLAN AT EL 407.00 - AREA 1 AND 2	X
127	S-111	PLAN AT EL 407.00 - AREA 4	X
128	S-112	PLAN AT EL 407.00 - AREA 5	X
129	S-113	PLAN AT EL 407.00 - AREA 6 AND CLASS A6 CONCRETE LOCATION PLAN AT EL 407.00	X
130	S-114	PLAN AT EL 421.00 - AREA 1	X
131	S-115	PLAN AT EL 421.00 - AREA 2	X
132	S-116	PLAN AT EL 421.00 - AREA 3	X
133	S-117	PLAN AT EL 421.00 - AREA 4	X
134	S-118	PLAN AT EL 421.00 - AREA 5	X
135	S-119	PLAN AT EL 421.00 - AREA 6	X
136	S-120	FLAT ROOF FRAMING PLAN - AREA 1	X
137	S-121	FLAT ROOF FRAMING PLAN - AREA 2	X
138	S-122	FLAT ROOF FRAMING PLANS - AREA 4 AND TOP OF STEEL 439.67	X
139	S-123	SHED ROOF FRAMING PLAN - AREA 5	X
140	S-124	GABLE ROOF FRAMING PLAN - AREA 3	X
141	S-125	ROOF FRAMING PLANS - AREA 6	X
142	S-126	PLANS	X
143	S-200	SECTIONS - SHEET 1	X
144	S-201	SECTIONS - SHEET 2	X
145	S-202	SECTIONS - SHEET 3	X
146	S-203	SECTIONS - SHEET 4	X
147	S-204	SECTIONS - SHEET 5	X
148	S-205	SECTIONS - SHEET 6	X
149	S-206	SECTIONS - SHEET 7	X
150	S-207	SECTIONS - SHEET 8	X
151	S-208	SECTIONS - SHEET 9	X
152	S-209	SECTIONS - SHEET 10	X
153	S-210	SECTIONS - SHEET 11	X
154	S-211	SECTIONS - SHEET 12	X
155	S-212	SECTIONS - SHEET 13	X
156	S-213	SECTIONS - SHEET 14	X
157	S-214	SECTIONS - SHEET 15	X
158	S-215	SECTIONS - SHEET 16	X
159	S-216	SECTIONS - SHEET 17	X
160	S-217	SECTIONS - SHEET 18	X
161	S-218	FRAMING ELEVATIONS - SHEET 1	X
162	S-219	FRAMING ELEVATIONS - SHEET 2	X
163	S-220	FRAMING ELEVATIONS - SHEET 3	X
164	S-221	FRAMING ELEVATIONS - SHEET 4	X
165	S-222	FRAMING ELEVATIONS - SHEET 5	X
166	S-223	FRAMING ELEVATIONS - SHEET 6	X
167	S-224	FRAMING ELEVATIONS - SHEET 7	X
168	S-300	BEAM SCHEDULE AND DETAILS	X
169	S-301	DETAILS - SHEET 1	X
170	S-302	DETAILS - SHEET 2	X
171	S-303	DETAILS - SHEET 3	X
172	S-304	DETAILS - SHEET 4	X
173	S-305	DETAILS - SHEET 5	X
174	S-306	DETAILS - SHEET 6	X
175	S-307	DETAILS - SHEET 7	X
176	S-510	PLANS AND SECTIONS	X
177	S-600	STANDARD DETAILS SHEET 1	X
178	S-601	STANDARD DETAILS SHEET 2	X
179	S-602	STANDARD DETAILS SHEET 3	X
180	S-603	STANDARD DETAILS SHEET 4	X
181	S-604	STANDARD DETAILS SHEET 5	X
182	S-605	STANDARD DETAILS SHEET 6	X
183	S-606	STANDARD DETAILS SHEET 7	X
184	S-607	STANDARD DETAILS SHEET 8	X
		MECHANICAL	
185	M-001	GENERAL NOTES, SYMBOLS AND ABBREVIATIONS	X
186	M-101	PARTIAL PLAN AT EL 383.00 - AREA 1	X
187	M-102	PARTIAL PLAN AT EL 383.00 - AREA 2 & 3	X
188	M-103	PARTIAL PLAN AT EL 398.00 - AREA 1	X
189	M-104	PARTIAL PLAN AT EL 398.00 - AREA 2 & 3	X
190	M-105	PARTIAL PLAN AT EL 407.00 - AREA 1	X
191	M-106	PARTIAL PLAN AT EL 407.00 - AREA 2	X
192	M-107	PARTIAL PLAN AT EL 407.00 - AREA 3	X
193	M-108	PARTIAL PLAN AT EL 407.00 - AREA 4	X
194	M-109	PARTIAL PLAN AT EL 407.00 - AREA 5	X
195	M-110	PARTIAL PLAN AT EL 421.00 - AREA 1	X
196	M-111	PARTIAL PLAN AT EL 421.00 - AREA 2	X
197	M-112	PARTIAL PLAN AT EL 421.00 - AREA 3	X
198	M-113	PARTIAL PLAN AT EL 421.00 - AREA 4	X
199	M-114	PARTIAL PLAN AT EL 421.00 - AREA 5	X
200	M-201	SECTIONS - SHEET 1	X
201	M-202	SECTIONS - SHEET 2	X
202	M-203	SECTIONS - SHEET 3	X
203	M-204	SECTIONS - SHEET 4	X
204	M-205	SECTIONS - SHEET 5	X
205	M-206	SECTIONS - SHEET 6	X
206	M-207	SECTIONS - SHEET 7	X
207	M-501	PLANS	X
208	M-502	SECTIONS	X
209	M-503	PLANS	X
210	M-504	SECTIONS	X
211	M-601	DETAILS - SHEET 1	X
212	M-602	DETAILS - SHEET 2	X
213	M-603	DETAILS - SHEET 3	X
214	M-604	DETAILS - SHEET 4	X
215	M-605	DETAILS - SHEET 5	X
216	M-606	DETAILS - SHEET 6	X
217	M-607	DETAILS - SHEET 7	X
218	M-608	DETAILS - SHEET 8	X
219	M-609	DETAILS - SHEET 9	X
220	M-610	DETAILS - SHEET 10	X
221	M-611	DETAILS - SHEET 11	X
		INSTRUMENTATION	
222	I-001	GENERAL NOTES, SYMBOLS AND LEGEND	X
223	I-002	CONTROL SYSTEM BLOCK DIAGRAM	X
224	I-003	FACILITY SIGNAL COORDINATION - PROCESS AND INSTRUMENT DIAGRAM	X
225	I-004	MIXER AND FLOCCULATORS - PROCESS AND INSTRUMENT DIAGRAM	X
226	I-005	DISSOLVED AIR FLOTATION (DAF) - PROCESS AND INSTRUMENT DIAGRAM	X
227	I-006	FILTERS AND DAF RECYCLE PUMPS - PROCESS AND INSTRUMENT DIAGRAM	X
228	I-007	DAF RECYCLE SATURATION SYSTEM - PROCESS AND INSTRUMENT DIAGRAM	X
229	I-008	AIR SCOUR BLOWER SYSTEM - PROCESS AND INSTRUMENT DIAGRAM	X
230	I-009	FILTERED WATER AND BACKWASH SYSTEM - PROCESS AND INSTRUMENT DIAGRAM	X
231	I-010	COMBINED WASTE WASHWATER SYSTEM - PROCESS AND INSTRUMENT DIAGRAM	X
232	I-011	FLOATED SOLIDS TRANSFER SYSTEM - PROCESS AND INSTRUMENT DIAGRAM	X
233	I-012	DEWATERING CENTRIFUGE - PROCESS AND INSTRUMENT DIAGRAM	X
234	I-013	RESIDUALS HANDLING SYSTEM - PROCESS AND INSTRUMENT DIAGRAM	X
235	I-014	CHEMICAL SYSTEMS - COAGULANT - PROCESS AND INSTRUMENT DIAGRAM	X
236	I-015	CHEMICAL SYSTEMS - SODIUM HYPOCHLORITE - PROCESS AND INSTRUMENT DIAGRAM	X
237	I-016	CHEMICAL SYSTEMS - SODIUM HYDROXIDE - PROCESS AND INSTRUMENT DIAGRAM	X
238	I-017	CHEMICAL SYSTEMS - CORROSION INHIBITOR - PROCESS AND INSTRUMENT DIAGRAM	X

WARNING
IT IS A VIOLATION OF SECTION 7209.2 OF THE NEW YORK STATE EDUCATION LAW FOR ANY PERSON, UNLESS ACTING UNDER THE DIRECTION OF A LICENSED PROFESSIONAL ENGINEER, TO ALTER IN ANY WAY PLANS, SPECIFICATIONS, PLATS OR REPORTS TO WHICH THE SEAL OF A PROFESSIONAL ENGINEER HAS BEEN APPLIED. IF AN ITEM BEARING THE SEAL OF A PROFESSIONAL ENGINEER IS ALTERED, THE ALTERING ENGINEER SHALL AFFIX TO THE ITEM HIS SEAL AND THE NOTATION "ALTERED BY" FOLLOWED BY HIS SIGNATURE, THE DATE, AND A SPECIFIC DESCRIPTION OF THE ALTERATION.

REV	ISSUED FOR	DATE	BY

PROJECT ENGINEER:	R. FROST
DESIGNED BY:	R. FROST
DRAWN BY:	B. CASULL
CHECKED BY:	E. FELDMAN

IF THIS BAR DOES NOT MEASURE 1" THEN DRAWING IS NOT TO FULL SCALE 0 1/2" 1"

BID SET

STATE OF NEW YORK · EDWARD J. McCARTHY FELDMAN · 085018 · LICENSED PROFESSIONAL ENGINEER

Hazen

HAZEN AND SAWYER
498 SEVENTH AVENUE, 11th FLOOR
NEW YORK, NEW YORK 10018

WESTCHESTER JOINT WATER WORKS
MAMARONECK, NY

RYE LAKE WATER FILTRATION PLANT
HARRISON, NY

GENERAL
DRAWING INDEX - SHEET 1

DATE:	FEB 2025
HAZEN NO.:	90388-000
CONTRACT NO.:	A1364-A
DRAWING NUMBER:	G-002

Autodesk Docs://90388-000_Rye_Lake_Filtration/90388-000-GENL.rvt
2/26/2025 9:53:51 AM

239	I-018	CHEMICAL SYSTEMS - HYDROFLUOROSILICIC ACID - PROCESS AND INSTRUMENT DIAGRAM	X
240	I-019	UV AND FINAL CHEMICAL ADDITION - PROCESS AND INSTRUMENT DIAGRAM	X
241	I-020	RESIDUAL POLYMER SYSTEMS - PROCESS AND INSTRUMENT DIAGRAM	X
242	I-021	SUPPORT SYSTEMS - PROCESS AND INSTRUMENT DIAGRAM	X
243	I-022	INSTALLATION DETAILS SHEET 1	X
244	I-023	INSTALLATION DETAILS SHEET 2	X
245	I-024	INSTALLATION DETAILS SHEET 3	X
		HVAC	
246	H-001	GENERAL NOTES, SYMBOLS AND ABBREVIATIONS	X
247	H-002	CONTROL DIAGRAMS - SHEET 1	X
248	H-003	CONTROL DIAGRAMS - SHEET 2	X
249	H-004	CONTROL DIAGRAMS - SHEET 3	X
250	H-005	CONTROL DIAGRAMS - SHEET 4	X
251	H-006	CONTROL DIAGRAMS - SHEET 5	X
252	H-007	CONTROL DIAGRAMS - SHEET 6	X
253	H-100	EL. 383.00 - OVERALL PLAN	X
254	H-101	EL. 407.00 - AREA 1	X
255	H-102	EL. 407.00 - AREA 2	X
256	H-103	EL. 407.00 - AREA 3	X
257	H-104	EL. 407.00 - AREA 6	X
258	H-105	EL. 421.00 & EL. 429.33 - OVERALL PLAN	X
259	H-106	EL. 421.00 & EL. 429.33 - AREA 1	X
260	H-107	EL. 421.00 & EL. 429.33 - AREA 2	X
261	H-108	EL. 421.00 - AREA 3	X
262	H-109	EL. 421.00 - AREA 4	X
263	H-110	EL. 421.00 - AREA 5	X
264	H-111	EL. 421.00 - AREA 6	X
265	H-200	SECTIONS - SHEET 1	X
266	H-201	SECTIONS - SHEET 2	X
267	H-202	SECTIONS - SHEET 3	X
268	H-600	SCHEDULES - SHEET 1	X
269	H-601	SCHEDULES - SHEET 2	X
270	H-602	SCHEDULES - SHEET 3	X
271	H-603	SCHEDULES - SHEET 4	X
272	H-604	DETAILS - SHEET 1	X
273	H-605	DETAILS - SHEET 2	X
274	H-606	DETAILS - SHEET 3	X
		PLUMBING	
275	P-001	GENERAL NOTES, SYMBOLS AND ABBREVIATIONS	X
276	P-002	DOMESTIC WATER RISER DIAGRAM	X
277	P-003	SANITARY RISER DIAGRAM -SHEET 1	X
278	P-004	SANITARY RISER DIAGRAM -SHEET 2	X
279	P-005	STORM RISER DIAGRAM	X
280	P-100	BASEMENT PLAN EL 383.00	X
281	P-101	EL. 407.00 -AREA 1	X
282	P-102	EL. 407.00 -AREA 2	X
283	P-103	EL. 407.00 -AREA 3	X
284	P-104	EL. 407.00 -AREA 5	X
285	P-105	EL. 407.00 -AREA 6	X
286	P-106	BACKFLOW PREVENTION PLAN	X
287	P-107	SECOND FLOOR PLAN EL 421.00	X
288	P-108	EL. 421.00 -AREA 1	X
289	P-109	EL. 421.00 -AREA 2	X
290	P-110	EL. 421.00 -AREA 3	X
291	P-111	EL. 421.00 -AREA 4	X
292	P-112	EL. 421.00 -AREA 5	X
293	P-113	EL. 421.00 -AREA 6	X
294	P-114	ROOF PLAN	X
295	P-200	SECTIONS	X
296	P-600	SCHEDULES -SHEET 1	X
297	P-601	SCHEDULES -SHEET 2	X
298	P-602	DETAILS -SHEET 1	X
299	P-603	DETAILS -SHEET 2	X
300	P-604	DETAILS -SHEET 3	X
		FIRE PROTECTION	
301	FP-001	GENERAL NOTES, SYMBOLS AND ABBREVIATIONS	X
302	FP-002	DETAILS -SHEET 1	X
303	FP-100	EL. 383.00 -OVERALL PLAN	X
304	FP-101	EL. 407.00 -OVERALL PLAN	X
305	FP-102	EL. 421.00 -OVERALL PLAN	X
		ELECTRICAL	
306	E-001	LEGENDS, AND SYMBOLS	X
307	E-002	GENERAL NOTES & ABBREVIATIONS	X
308	E-003	OVERALL SINGLE LINE DIAGRAM	X
309	E-004	MCC-1 SINGLE LINE DIAGRAM	X
310	E-005	MCC-2 SINGLE LINE DIAGRAM SHEET 1	X
311	E-006	MCC-2 SINGLE LINE DIAGRAM SHEET 2	X
312	E-007	MCC-2 SINGLE LINE DIAGRAM SHEET 3	X
313	E-008	SWITCHBOARD AND GENERATOR SWITCHGEAR ELEVATIONS	X
314	E-009	MCC-1 ELEVATION	X
315	E-010	MCC-2 ELEVATION	X
316	E-011	SOLAR SYSTEM RISER DIAGRAM	X
317	E-012	PANEL BOARD SCHEDULES - SHEET 1	X
318	E-013	PANEL BOARD SCHEDULES - SHEET 2	X
319	E-014	PANEL BOARD SCHEDULES - SHEET 3	X
320	E-015	PANEL BOARD SCHEDULES - SHEET 4	X
321	E-016	PANEL BOARD SCHEDULES - SHEET 5	X
322	E-017	PANEL BOARD SCHEDULES - SHEET 6	X
323	E-018	WIRING DIAGRAM - SHEET 1	X
324	E-019	WIRING DIAGRAM - SHEET 2	X
325	E-020	WIRING DIAGRAM - SHEET 3	X
326	E-021	WIRING DIAGRAM - SHEET 4	X
327	E-022	FIRE ALARM SYSTEM RISER DIAGRAM - SHEET 1	X
328	E-023	FIRE ALARM SYSTEM RISER DIAGRAM - SHEET 2	X
329	E-024	SECURITY SYSTEM AND PAGING/COMMUNICATION NETWORK RISER DIAGRAM - SHEET 1	X
330	E-025	SECURITY SYSTEM AND PAGING/COMMUNICATION NETWORK RISER DIAGRAM - SHEET 2	X
331	E-100	SITE PLAN	X
332	E-101	POWER PLAN - EL 383.00 -AREA 1	X
333	E-102	POWER PLAN - EL 383.00 -AREA 2 & 3	X
334	E-103	POWER PLAN - EL 398.00 -AREA 1	X
335	E-104	POWER PLAN - EL 398.00 -AREA 2 & 3	X
336	E-105	POWER PLAN - EL 407.00 -AREA 1	X
337	E-106	POWER PLAN - EL 407.00 -AREA 2	X
338	E-107	POWER PLAN - EL 407.00 -AREA 3	X
339	E-108	POWER PLAN - EL 407.00 -AREA 4	X
340	E-109	POWER PLAN - EL 407.00 -AREA 5	X
341	E-110	POWER PLAN - EL 407.00 -AREA 6	X
342	E-111	POWER PLAN - EL 421.00 -AREA 1	X
343	E-112	POWER PLAN - EL 421.00 -AREA 2	X
344	E-113	POWER PLAN - EL 421.00 -AREA 3	X
345	E-114	POWER PLAN - EL 421.00 -AREA 4	X
346	E-115	POWER PLAN - EL 421.00 -AREA 5	X
347	E-116	POWER PLAN - EL 421.00 -AREA 6	X
348	E-117	POWER AND LIGHTING PLAN - EL 436.50 -ROOF	X
349	E-118	ENLARGED ROOM - EL 407.00	X
350	E-119	ENLARGED ROOM - EL 421.00	X
351	E-120	LIGHTING PLAN - EL 383.00 -AREA 1	X
352	E-121	LIGHTING PLAN - EL 383.00 -AREA 2 & 3	X
353	E-122	LIGHTING PLAN - EL 398.00 -AREA 1	X
354	E-123	LIGHTING PLAN - EL 398.00 -AREA 2 & 3	X
355	E-124	LIGHTING PLAN - EL 407.00 -AREA 1	X
356	E-125	LIGHTING PLAN - EL 407.00 -AREA 2	X
357	E-126	LIGHTING PLAN - EL 407.00 -AREA 3	X
358	E-127	LIGHTING PLAN - EL 407.00 -AREA 4	X
359	E-128	LIGHTING PLAN - EL 407.00 -AREA 5	X
360	E-129	LIGHTING PLAN - EL 407.00 -AREA 6	X
361	E-130	LIGHTING PLAN - EL 421.00 -AREA 1	X
362	E-131	LIGHTING PLAN - EL 421.00 -AREA 2	X
363	E-132	LIGHTING PLAN - EL 421.00 -AREA 3	X
364	E-133	LIGHTING PLAN - EL 421.00 -AREA 4	X
365	E-134	LIGHTING PLAN - EL 421.00 -AREA 5	X
366	E-135	LIGHTING PLAN - EL 421.00 -AREA 6	X
367	E-136	FIRE ALARM & SECURITY PLAN - EL 383.00 -AREA 1	X
368	E-137	FIRE ALARM & SECURITY PLAN - EL 383.00 -AREA 2 & 3	X
369	E-138	FIRE ALARM & SECURITY PLAN - EL 398.00 -AREA 1	X
370	E-139	FIRE ALARM & SECURITY PLAN - EL 398.00 -AREA 2 & 3	X
371	E-140	FIRE ALARM & SECURITY PLAN - EL 407.00 -AREA 1	X
372	E-141	FIRE ALARM & SECURITY PLAN - EL 407.00 -AREA 2	X
373	E-142	FIRE ALARM & SECURITY PLAN - EL 407.00 -AREA 3	X
374	E-143	FIRE ALARM & SECURITY PLAN - EL 407.00 -AREA 4	X
375	E-144	FIRE ALARM & SECURITY PLAN - EL 407.00 -AREA 5	X
376	E-145	FIRE ALARM & SECURITY PLAN - EL 407.00 -AREA 6	X
377	E-146	FIRE ALARM & SECURITY PLAN - EL 421.00 -AREA 1	X
378	E-147	FIRE ALARM & SECURITY PLAN - EL 421.00 -AREA 2	X
379	E-148	FIRE ALARM & SECURITY PLAN - EL 421.00 -AREA 3	X
380	E-149	FIRE ALARM & SECURITY PLAN - EL 421.00 -AREA 4	X
381	E-150	FIRE ALARM & SECURITY PLAN - EL 421.00 -AREA 5	X
382	E-151	FIRE ALARM & SECURITY PLAN - EL 421.00 -AREA 6	X
383	E-152	LIGHTNING PROTECTION PLAN	X
384	E-153	GROUNDING PLAN	X
385	E-201	STAIRCASE SECTIONS -SHEET 1	X
386	E-202	STAIRCASE SECTIONS -SHEET 2	X
387	E-501	WASTE WASHWATER TANK -POWER PLAN	X
388	E-601	STANDARD DETAILS - SHEET 1	X
389	E-602	STANDARD DETAILS - SHEET 2	X
390	E-603	STANDARD DETAILS - SHEET 3	X
391	E-604	STANDARD DETAILS - SHEET 4	X
392	E-605	STANDARD DETAILS - SHEET 5	X

WARNING
IT IS A VIOLATION OF SECTION 7209.2 OF THE NEW YORK STATE EDUCATION LAW FOR ANY PERSON, UNLESS ACTING UNDER THE DIRECTION OF A LICENSED PROFESSIONAL ENGINEER, TO ALTER IN ANY WAY PLANS, SPECIFICATIONS, PLATS OR REPORTS TO WHICH THE SEAL OF A PROFESSIONAL ENGINEER HAS BEEN APPLIED. IF AN ITEM BEARING THE SEAL OF A PROFESSIONAL ENGINEER IS ALTERED, THE ALTERING ENGINEER SHALL AFFIX TO THE ITEM HIS SEAL AND THE NOTATION "ALTERED BY" FOLLOWED BY HIS SIGNATURE, THE DATE, AND A SPECIFIC DESCRIPTION OF THE ALTERATION.

REV	ISSUED FOR	DATE	BY

PROJECT ENGINEER: R. FROST
DESIGNED BY: R. FROST
DRAWN BY: B. CASULL
CHECKED BY: E. FELDMAN
IF THIS BAR DOES NOT MEASURE 1" THEN DRAWING IS NOT TO FULL SCALE 0 1/2" 1"

BID SET

STATE OF NEW YORK · E. MCCARTHY FELDMAN · 085018 · LICENSED PROFESSIONAL ENGINEER

Hazen
HAZEN AND SAWYER
498 SEVENTH AVENUE, 11th FLOOR
NEW YORK, NEW YORK 10018

WESTCHESTER JOINT WATER WORKS
MAMARONECK, NY

RYE LAKE WATER FILTRATION PLANT
HARRISON, NY

GENERAL
DRAWING INDEX - SHEET 2

DATE: FEB 2025
HAZEN NO.: 90388-000
CONTRACT NO.: A1364-A
DRAWING NUMBER: G-003

Autodesk Docs://90388-000_Rye_Lake_Filtration/90388-000-GENL.rvt
2/26/2025 9:53:51 AM

ABBREVIATIONS

AB	ANCHOR BOLT
ABW	AUTOMATIC BACKWASH
AC	ALTERNATING CURRENT / ASBESTOS CEMENT / AIR CONDITIONING
ACCU	AIR COOLED CONDENSING UNIT
ACH	AIR CHANGES PER HOUR
ACT	ACOUSTIC TILE
AD	AREA DRAIN
ADDL	ADDITIONAL
ADJ	ADJUSTABLE
AFF	ABOVE FINISHED FLOOR
AGGR	AGGREGATE
AHU	AIR HANDLING UNIT
AI	ANALOG INPUT
AL	ALUMINUM
ALLOW	ALLOWANCE/ALLOWABLE
ALT	ALTERNATE
AO	ANALOG OUTPUT
APPROX	APPROXIMATE
ARCH	ARCHITECTURAL
ASB	ASBESTOS
ASPH	ASPHALT
ASME	AMERICAN SOCIETY OF MECHANICAL ENGINEERS
ASTM	AMERICAN SOCIETY FOR TESTING AND MATERIALS
AT	ASPHALT TILE
ATC	AUTOMATIC TEMPERATURE CONTROL
B	BORING
BD	BOARD
BFE	BOTTOM OF FITTING ELEV
BFP	BACKFLOW PREVENTER
BFPA	BACKFLOW PREVENTER ASSEMBLY
BFV	BUTTERFLY VALVE
BHP	BRAKE HORSE POWER
BITUM	BITUMINOUS
BL	BASE LINE/ BUILDING LINE
BLCP	BOILER LOCAL CONTROL PANEL
BLDG	BUILDING
BLK	BLOCK
BM	BENCH MARK
BMCP	BOILER MASTER CONTROL PANEL
BOC	BACK OF CURB
BOD	BOTTOM OF DUCT
BOT	BOTTOM
BRG	BEARING
BRK	BRICK
BRZ	BRONZE
BSMT	BASEMENT
BT	BOLT
BTU	BRITISH THERMAL UNIT
BUR	BUILT-UP ROOFING
BV	BALL VALVE
C	CLOSET/CARPET/CHANNEL
CAB	CABINET
CB	CATCH BASIN
C/C	CENTER TO CENTER
CCP	CENTRIFUGE CONTROL PANEL
CD	CEILING DIFFUSER
CE	CONSTRUCTION EASEMENT
CEM	CEMENT
CER	CERAMIC
CF	CUBIC FEET
CFM	CUBIC FEET PER MINUTE
CFT	CHEMICAL FEED TANK
CI	CAST IRON/ CUBIC INCHES
CISPI	CAST IRON SOIL PIPE INSTITUTE
CIP	CAST IRON PIPE
CL	CENTER LINE / CHLORINE / CLOSET
CLG	CEILING
CLKG	CAULKING
CLR	CLEAR
CLW	CLEAR WATER DRAIN
CMP	CORRUGATED METAL PIPE
CMU	CONCRETE MASONRY UNIT
CO2	CARBON DIOXIDE
CO	CLEANOUT
COAG	COAGULANT
CODP	CLEANOUT DECK PLATE
COL	COLUMN
COMP	COMPRESSOR
CONC	CONCRETE
CONN	CONNECTION
CONST	CONSTRUCTION
CONT	CONTINUOUS
CONTR	CONTRACTOR
CONV	CONVEYOR
CORP	CORPORATION
CORR	CORRIDOR
CP	CONCRETE PLANK
CPP	CENTRIFUGE POWER PANEL
CPVC	CHLORINATED POLYVINYL CHLORIDE
CRS	COURSE
CT	CERAMIC TILE
CTJ	CONTROL JOINT
CU	COPPER
CV	CHECK VALVE
CW	COLD WATER
CY	CUBIC YARD
DAF	DISSOLVED AIR FLOTATION
DB	DRY BULB
DC	DIRECT CURRENT
DCDA	DOUBLE CHECK DETECTOR ASSEMBLY
DET	DETAIL
DF	DRINKING FOUNTAIN
DFU	DRAINAGE FIXTURE UNIT
DHU	DEHUMIDIFICATION UNIT
DI	DISCRETE INPUT
DIA (Ø)	DIAMETER
DIAG	DIAGONAL
DIM	DIMENSION
DIP	DUCTILE IRON PIPE
DISCH	DISCHARGE
DIST	DISTRIBUTION
DJ	DOUBLE JOINT
DL	DEAD LOAD
DN	DOWN
DO	DISCRETE OUTPUT
DOZ	DOZEN
DPIT	DIFFERENTIAL PRESSURE INDICATING TRANSMITTER
DPOL	DEWATERING POLYMER
DPSL	DIFFERENTIAL PRESSURE SENSOR LOW
DR	DOOR
DWG	DRAWING
DWH	DOMESTIC WATER HEATER
DWL	DOWEL
DWV	DRAINAGE, WASTE AND VENT
DX	DIRECT EXPANSION REFRIGERANT
E	EAST/ EASEMENT
EA	EACH / EXHAUST AIR
EAT	ENTERING AIR TEMPERATURE
ECC	ECCENTRIC
EF	EACH FACE / EXHAUST FAN
EFF	EFFLUENT / EFFICIENCY
EIP	EXIST IRON PIPE
EJ	EXPANSION JOINT
EL	ELEVATION
ELEC	ELECTRIC/ ELECTRICAL
ELL	ELBOW
EMB	EMBEDDED
ENGR	ENGINEER
ENT	ENTRANCE
EOG	EDGE OF GRAVEL
EOP	EDGE OF PAVEMENT
EQ	EQUAL
EQPT	EQUIPMENT
ES	ELECTRIC POWER SUPPLY
ESD	EMERGENCY SHUTDOWN STATION
ESE	EMERGENCY SHOWER AND EYEWASH
ESP	EXTERNAL STATIC PRESSURE
ET	EXPANSION TANK
ETC	ET CETERA
EUH	ELECTRIC UNIT HEATER
EW	EACH WAY
EWT	ENTERING WATER TEMPERATURE
EX	EXISTING
EXC	EXCAVATE
EXH	EXHAUST
EXP	EXPANSION
EXT	EXTERIOR
F	FLUORINE / FAHRENHEIT
FAB	FABRICATE
FACP	FIRE ALARM CONTROL PANEL
F&C	FRAME AND COVER
F&G	FRAME AND GRATE
FC	FLUSHING CONNECTION
FD	FLOOR DRAIN / FIRE DAMPER
FDC	FIRE DEPARTMENT CONNECTION
FDN	FOUNDATION
FE	FIRE EXTINGUISHER
FF	FINISHED FLOOR
FH	FIRE HYDRANT
FIN	FINISH
FIX	FIXTURE
FL	FLASHING/ FLOOR
FLEX	FLEXIBLE
FLG	FLANGE
FLUOR	FLUORESCENT
FLXC	FLEXIBLE CONNECTION
FM	FLOW METER
FP	FIRE PROTECTION
FPRF	FIREPROOF
FRP	FIBERGLASS REINFORCED POLYESTER LAMINATE
FS	FLOW SWITCH
FT	FEET
FTG	FOOTING/ FITTING
FURR	FURRING/ FURRED
G	GAS/ GAS LINE
GA	GAUGE
GAC	GRANULAR ACTIVATED CARBON
GAL	GALLON
GALV	GALVANIZED
GC	GENERAL CONTRACTOR
GD	GRAVITY DAMPER
GEN	GENERATOR
GI	GALVANIZED IRON
GL	GLASS
GLBV	GLOBE VALVE
GMU	GLYCOL MAKEUP UNIT
GPH	GALLONS PER HOUR
GPM	GALLONS PER MINUTE
GR	GRADE / GRAINS OF MOISTURE
GV	GATE VALVE
GW	GUY WIRE
GWB	GYPSUM WALL BOARD
GWF	GLAZED WALL FINISH
GYP	GYPSUM
H	HEIGHT
HB	HOSEBIB
HDW	HARDWARE
HEX	HEXAGONAL
HHWL	HIGH HIGH WATER LEVEL
HM	HOLLOW METAL
HMCP	HVAC MASTER CONTROL PANEL
HMI	HUMAN/MACHINE INTERFACE
HORZ	HORIZONTAL
HP	HORSEPOWER
HPT	HIGH POINT
HR	HOSE REEL / HOUR
HSS	HOLLOW STRUCTURAL SECTION
HTR	HEATER
HVAC	HEATING, VENTILATION AND AIR CONDITIONING
HW	HOT WATER
HWB	HOT WATER BOILER
HWL	HIGH WATER LEVEL
HWP	HOT WATER PUMP
HWR	HOT WATER RETURN
HWS	HOT WATER SUPPLY
HWY	HIGHWAY
HYD	HYDRAULIC
HZ	HERTZ
I	IRON
ID	INSIDE DIAMETER
IF	INSIDE FACE
IN	INCH
INCL	INCLUDED
INF	INFLUENT
INS	INSULATION
INT	INTERIOR
INV	INVERT
IW	INDIRECT WASTE
IWH	INSTANTANEOUS WATER HEATER
J	JOIST
JB	JUNCTION BOX
JCT	JUNCTION
JT	JOINT
KW	KILOWATT
KS	KITCHEN SINK
L	LENGTH/ ANGLE
LA	LINE AHEAD
LAM	LAMINATED
LAT	LEAVING AIR TEMPERATURE
LAV	LAVATORY
LB	POUND/ LINE BACK
LCP	LOCAL CONTROL PANEL
LCS	LOCAL CONTROL STATION
LF	LINEAR FEET
LG	LONG / LEVEL GAUGE
LL	LIVE LOAD
LLH	LONG LEG HORIZONTAL
LLV	LONG LEG VERTICAL
LLWL	LOW LOW WATER LEVEL
LP	LIGHT POLE
LPT	LOW POINT
LR	LONG RADIUS
LT	LIGHT
LTG	LIGHTING
LVR	LOUVER
LWL	LOW WATER LEVEL
LWT	LEAVING WATER TEMPERATURE
MAINT	MAINTENANCE
MATL	MATERIAL
MAX	MAXIMUM
MBH	1000 BTU PER HOUR
MCA	MINIMUM CIRCUIT AMPACITY
MCC	MOTOR CONTROL CENTER
MD	MOTORIZED DAMPER
MECH	MECHANICAL
MEMB	MEMBRANE
MET	METAL
MFR	MANUFACTURER
MG	MILLION GALLONS
MGD	MILLION GALLONS PER DAY
MH	MANHOLE
MIN	MINIMUM
MISC	MISCELLANEOUS
MJ	MECHANICAL JOINT
MLDG	MOLDING
MM	MILLIMETER
MO	MASONRY OPENING
MOCP	MAXIMUM OVER-CURRENT PROTECTION
MOD	MODIFY/ MODIFIED
MON	MONUMENT
MOT	MOTOR
MTD	MOUNTED
MTG	MOUNTING
MULT	MULTIPLE
N	NORTH
NA	NOT APPLICABLE
NC	NORMALLY CLOSED
NF	NEAR FACE
NFPA	NATIONAL FIRE PROTECTION ASSOCIATION
NH	NO-HUB CAST IRON SOIL PIPE
NIC	NOT IN CONTRACT
NO	NUMBER / NORMALLY OPEN
NOM	NOMINAL
NPHW	NON POTABLE HOT WATER
NPSH	NET POSITIVE SUCTION HEAD
NPW	NON POTABLE WATER
NPT	NATIONAL PIPE THREAD
NTS	NOT TO SCALE
OA	OUTDOOR AIR
OC	ON CENTER
OD	OUTSIDE DIAMETER
OF	OUTSIDE FACE
OFF	OFFICE
OPER	OPERATOR
OPNG	OPENING
OPP	OPPOSITE
ORIG	ORIGINAL
OT	OPEN TRUSS
OVHD	OVERHEAD
P	PROPANE
PAR	PARALLEL
PC	POINT OF CURVE/ PIECE
PCC	POINT OF COMPOUND CURVE
PCF	POUNDS PER CUBIC FOOT+
PD	PRESSURE DROP
PE	PLAIN END / POWER
PE LINING	POLYETHYLENE LINING
PERF	PERFORATED
PERP	PERPENDICULAR
PG	PRESSURE GAUGE
PH	HYDROGEN ION CONCENTRATION / PHASE
PI	POINT OF INTERSECTION / PRESSURE INDICATOR
PL	PROPERTY LINE/ PLATE
PLC	PROGRAMMABLE LOGIC CONTROLLER
PNL	PANEL
PP	POWER POLE
PREFAB	PREFABRICATED
PRV	PRESSURE RELIEF VALVE
PS	PUMPING STATION
PSF	POUNDS PER SQUARE FOOT
PSI	POUNDS PER SQUARE INCH
PSIG	POUNDS PER SQUARE INCH GAUGE
PSV	PRESSURE RELIEF VALVE
PT	POINT OF TANGENT/ POINT
PTN	PARTITION
PV	PLUG VALVE / PROPANE VAPORIZER
PVC	POLYVINYL CHLORIDE
PVMT	PAVEMENT
PW	POTABLE WATER
QTY	QUANTITY
R	RADIUS/ RISER
RA	RETURN AIR
RCP	REINFORCED CONCRETE PIPE / RECIRCULATING PUMP
RD	ROAD/ ROOF DRAIN
RECIR	RECIRCULATION
RECP	RECEPTACLE
RECT	RECTANGULAR
RED	REDUCER
REF	REFERENCE
REG	REGISTER
REINF	REINFORCING
REM	REMOVE
REQD	REQUIRED
REST	RESTRAINED
REV	REVISE
RF	ROOF
RFG	ROOFING
RJ	RESTRAINED JOINT
RM	ROOM
RND	ROUND
RO	ROUGH OPENING
RP	REDUCED PRESSURE ZONE BACKFLOW PREVENTER
RPM	REVOLUTIONS PER MINUTE
RR	RAILROAD
RT	RIGHT
RTU	REMOTE TERMINAL UNIT
RW	RAW WATER
R/W	RIGHT OF WAY
RWL	RAIN WATER LEADER
S	SOUTH
SA	SUPPLY AIR
SAN	SANITARY
SAS	SAMPLE SINK
SBL	SURVEY BASELINE
SCH	SCHEDULE
SCADA	SUPERVISORY CONTROL AND DATA ACQUISITION
SD	STORM / SITE DRAIN / SMOKE DETECTOR
SECT	SECTION
SERV	SERVICE
SEW	SEWER
SF	SQUARE FEET
SH	SHOWER
SHT	SHEET
SI	SQUARE INCH
SLG	SLIDE GATE
SIM	SIMILAR
SMACNA	SHEET METAL AND AIR CONDITIONING CONTRACTORS NATIONAL ASSOCIATION
SJ	STEEL JOIST
SPEC	SPECIFICATION
SQ	SQUARE
SR	SHORT RADIUS
SS	SANITARY SEWER / SERVICE SINK
SST	STAINLESS STEEL
ST	STREET / STORAGE TANK
STA	STATION
STD	STANDARD
STG	STORAGE
STIR	STIRRUP
STL	STEEL
STO	STORAGE
STRU	STRUCTURAL
SUB	SUBSTITUTE
SUP	SUPPLY
SUPT	SUPERINTENDENT
SUR	SURFACE
SUSP	SUSPENDED
SW	SWITCH
SWBD	SWITCHBOARD
SWD	SIDE WATER DEPTH
SYM	SYMMETRICAL
T	TREAD / THERMOSTAT
T&B	TOP AND BOTTOM
T&G	TONGUE AND GROOVE
TAN	TANGENT
TBM	TEMPORARY BENCH MARK
TC	TOP OF CURB
TD	TRENCH DRAIN
TDCV	TILTED DISC CHECK VALVE
TDH	TOTAL DYNAMIC HEAD
TFE	TETRAFLUOROETHYLENE
TECH	TECHNICAL
TEL	TELEPHONE
TEMP	TEMPERATURE
TER	TERRAZZO
THERMO	THERMOSTAT
THK	THICK
THRU	THROUGH
TMV	THERMOSTATIC MIXING VALVE
TOC	TOP OF CONCRETE
TOD	TOP OF DECK
TOF	TOP OF FOOTING
TOM	TOP OF MASONRY/ MANHOLE
TOS	TOP OF SLAB
TOW	TOP OF WALL
TOL	TOLERANCE
TPS	TWISTED PAIR SHIELDED
TRANS	TRANSFORMER
TS	TEMPERATURE SWITCH
TURB	TURBIDITY
TW	TEPID WATER
TWH	TEPID WATER HEATER
TYP	TYPICAL
UG	UNDERGROUND
UH	HOT WATER UNIT HEATER
UL	UNDERWRITERS LABORATORY
UNFIN	UNFINISHED
UNO	UNLESS NOTED OTHERWISE
UR	URINAL
UTIL	UTILITY
UV	ULTRAVIOLET
UV254	UV ABSORBANCE AT 254 NANOMETERS
V	SANITARY VENT
VAC	VACUUM
VAT	VINYL ASBESTOS TILE
VB	VACUUM BREAKER
VCP	VITRIFIED CLAY PIPE / VENDOR CONTROL PANEL
VD	VOLUME DAMPER
VEL	VELOCITY
VENT	VENTILATING/ VENTILATION
VERT	VERTICAL
VFD	VARIABLE FREQUENCY DRIVE
VOL	VOLUME
VP	VENT PIPE
VWC	VINYL WALL COVERING
W	WEST/ WIDTH
W/	WITH
WB	WET BULB
WC	WATER CLOSET / WATER COLUMN
WCO	WALL CLEANOUT
WD	WALL DIFFUSER
WE	WEIGHT ELEMENT
WF	WIDE FLANGE
WG	WATER GUAGE
WH	WATER HEATER
WHA	WATER HAMMER ARRESTER
WI	WROUGHT IRON
WIT	WEIGHT INDICATING TRANSMITTER
WJWW	WESTCHESTER JOINT WATER WORKS
WL	WATER LEVEL
W/L	WATER LINE
WM	WATER METER
WMS	WIRE MESH SCREEN
WO	WINDOW OPENING
W/O	WITHOUT
WP	WATERPROOF
WPFG	WATER PROOFING
WPT	WALL PENETRATING TYPE
WSE	WATER SURFACE ELEVATION
WSHH	WEIGHT SWITCH HIGH HIGH
WSP	WEATHERSTRIP
WT	WEIGHT
WV	WATER VALVE
WWF	WELDED WIRE FABRIC
XH	EXTRA HEAVY CAST IRON SOIL PIPE
YD	YARD
YR	YEAR

WARNING

IT IS A VIOLATION OF SECTION 7209.2 OF THE NEW YORK STATE EDUCATION LAW FOR ANY PERSON, UNLESS ACTING UNDER THE DIRECTION OF A LICENSED PROFESSIONAL ENGINEER, TO ALTER IN ANY WAY PLANS, SPECIFICATIONS, PLATS OR REPORTS TO WHICH THE SEAL OF A PROFESSIONAL ENGINEER HAS BEEN APPLIED. IF AN ITEM BEARING THE SEAL OF A PROFESSIONAL ENGINEER IS ALTERED, THE ALTERING ENGINEER SHALL AFFIX TO THE ITEM HIS SEAL AND THE NOTATION "ALTERED BY" FOLLOWED BY HIS SIGNATURE, THE DATE, AND A SPECIFIC DESCRIPTION OF THE ALTERATION.

GENERAL NOTES

NOTES:

1. THE CONTRACTOR SHALL DIRECT TRUCK DRIVERS TO USE MAJOR ROADS AND HIGHWAYS WHERE POSSIBLE TO AVOID THE USE OF RESIDENTIAL ROADS AND BACK STREETS AND ENSURE THAT ALL CONSTRUCTION TRUCK TRAFFIC BE REQUIRED TO APPROACH AND DEPART THE SITE FROM AND TO THE NORTH. CONSTRUCTION TRUCKS ARE PROHIBITED FROM MAKING LEFT-HAND TURNS WHEN EXITING THE PROJECT SITE ONTO PURCHASE STREET.
2. THE CONTRACTOR MUST POST AN ON-SITE SPEED LIMIT OF TEN (10) MILES PER HOUR AND FOLLOW SUCH SPEED AT ALL TIMES.

LEGEND

SYMBOLS

- GATE VALVE
- BUTTERFLY VALVE
- PLUG VALVE
- SWING CHECK VALVE
- GLOBE VALVE
- PINCH VALVE
- DIAPHRAGM VALVE
- BALL VALVE
- BALL CHECK VALVE
- MUD VALVE VALVE
- HARNESSED FLANGED COUPLING ADAPTER
- HARNESSED SLEEVE TYPE COUPLING
- SLEEVE TYPE COUPLING
- HARNESSED FLEXIBLE COUPLING
- MECHANICAL COUPLING
- WELDED JOINT
- FLANGED JOINT
- MECHANICAL PUSH-ON OR RESTRAINED JOINT
- WALL PENETRATION
- UNION
- FLUSHING CONNECTION
- HOSE BIB
- REDUCER
- QUICK DISCONNECT FITTING
- SOIL BORING
- YARD HYDRANT
- FIRE HYDRANT

LINETYPES

- PROPOSED ITEMS
- EXISTING ITEMS
- HIDDEN ITEMS
- DEMOLITION ITEMS
- CENTER LINE
- MATCH LINE

MATERIALS

- GRADE OR EARTH
- ASPHALT PAVING
- SAND
- GRAVEL
- CONCRETE
- CONCRETE FILL
- CONC. MASONRY UNIT
- BRICK
- ROCK
- STEEL
- INSULATION
- WATER SURFACE
- GRATING
- CHECKERED PLATE
- GLASS
- WOOD BLOCKING

SECTION AND DETAIL KEYING

SECTION IDENTIFICATION

(1) SECTION CUT ON DRAWING M-201:



SECTION LETTER

DRAWING ON WHICH SECTION APPEARS*

(2) ON DRAWING M-201 THIS SECTION IS IDENTIFIED AS:



SECTION LETTER

DRAWING FROM WHICH SECTION WAS TAKEN*

DETAIL IDENTIFICATION

(1) DETAIL CALL-OUT ON DRAWING M-201 AS:



DETAIL NUMBER

DRAWING ON WHICH DETAIL IS SHOWN*

(2) ON DRAWING M-201 THIS DETAIL IDENTIFIED AS:



DETAIL NUMBER

DRAWING ON WHICH DETAIL IS CALLED OUT*

* NOTE:
IF PLAN, SECTION AND DETAIL (OR DETAIL CALL-OUT) ARE SHOWN ON SAME DRAWING, DRAWING NUMBER IS REPLACED BY A LINE.

STANDARD DETAIL IDENTIFICATION

STANDARD DETAILS ARE REFERENCED BY A UNIQUE SEVEN DIGIT NUMBER AND ARE SHOWN ON THE CONTRACT DRAWINGS AS SHOWN:



STANDARD DETAILS ARE ARRANGED IN NUMERICAL ORDER ON THE STANDARD DETAIL SHEETS



REV	ISSUED FOR	DATE	BY

PROJECT ENGINEER:	R. FROST
DESIGNED BY:	R. FROST
DRAWN BY:	B. CASULL
CHECKED BY:	E. FELDMAN

IF THIS BAR DOES NOT MEASURE 1" THEN DRAWING IS NOT TO FULL SCALE — 0 1/2" 1"

BID SET

STATE OF NEW YORK — EILEEN McCARTHY FELDMAN — 085018 — LICENSED PROFESSIONAL ENGINEER

Hazen

HAZEN AND SAWYER
498 SEVENTH AVENUE, 11th FLOOR
NEW YORK, NEW YORK 10018

WESTCHESTER JOINT WATER WORKS
MAMARONECK, NY

RYE LAKE WATER FILTRATION PLANT
HARRISON, NY

GENERAL
GENERAL NOTES, SYMBOLS AND ABBREVIATIONS

DATE:	FEB 2025
HAZEN NO.:	90388-000
CONTRACT NO.:	A1364-A
DRAWING NUMBER:	G-004

Autodesk Docs://90388-000_Rye_Lake_Filtration/90388-000-GENL.rvt
2/6/2025 5:33:14 PM

AREA/ROOM DESIGNATION			
ROOM NUMBER	BUILDING NAME	AREA/ROOM NAME	AREA/ROOM DESIGNATION
001	FILTRATION PLANT	BACKWASH TANK	INDOOR WET PROCESS AREA
002	FILTRATION PLANT	FILTERED WATER TRANSFER TANKS	INDOOR WET PROCESS AREA
003	FILTRATION PLANT	FLOATED SOLIDS BUFFER TANK	INDOOR WET PROCESS AREA
004	FILTRATION PLANT	UV DISINFECTION SYSTEM	INDOOR WET PROCESS AREA
005	FILTRATION PLANT	RESIDUALS STORAGE TANKS	INDOOR WET PROCESS AREA
006	FILTRATION PLANT	STORAGE CLOSET	INDOOR DRY NON-PROCESS AREA
007	FILTRATION PLANT	PIPE GALLERY	INDOOR WET PROCESS AREA
008	FILTRATION PLANT	VESTIBULE	INDOOR DRY NON-PROCESS AREA
101	FILTRATION PLANT	HYDROFLUOROSILICIC ACID	TYPE 1 CHEMICAL STORAGE / TRANSFER AREA
102	FILTRATION PLANT	SODIUM HYPOCHLORITE	TYPE 1 CHEMICAL STORAGE / TRANSFER AREA
103	FILTRATION PLANT	COAGULANT	TYPE 2 CHEMICAL STORAGE / TRANSFER AREA
104	FILTRATION PLANT	CORROSION INHIBITOR	TYPE 2 CHEMICAL STORAGE / TRANSFER AREA
105	FILTRATION PLANT	POLYMER/SOFTENER (FUTURE)	TYPE 2 CHEMICAL STORAGE / TRANSFER AREA
106	FILTRATION PLANT	FILTERED WATER PUMPING & DAF ROOM	INDOOR WET PROCESS AREA
107	FILTRATION PLANT	SODIUM HYDROXIDE	TYPE 2 CHEMICAL STORAGE / TRANSFER AREA
108	FILTRATION PLANT	CLOSET	INDOOR DRY NON-PROCESS AREA
109	FILTRATION PLANT	DEWATERING ROOM	INDOOR WET PROCESS AREA
110	FILTRATION PLANT	FIRE SPRINKLER RISER ROOM	INDOOR DRY NON-PROCESS AREA
111	FILTRATION PLANT	CONFERENCE ROOM	INDOOR DRY NON-PROCESS AREA
112	FILTRATION PLANT	LOBBY	INDOOR DRY NON-PROCESS AREA
113	FILTRATION PLANT	VESTIBULE	INDOOR DRY NON-PROCESS AREA
114	FILTRATION PLANT	MAINTENANCE CLOSET	INDOOR DRY NON-PROCESS AREA
115	FILTRATION PLANT	WOMENS BATHROOM	INDOOR DRY NON-PROCESS AREA
116	FILTRATION PLANT	WOMENS LOCKER ROOM	INDOOR DRY NON-PROCESS AREA
117	FILTRATION PLANT	MENS BATHROOM	INDOOR DRY NON-PROCESS AREA
118	FILTRATION PLANT	MENS LOCKER ROOM	INDOOR DRY NON-PROCESS AREA
119	FILTRATION PLANT	ELECTRICAL	INDOOR DRY NON-PROCESS AREA
120	FILTRATION PLANT	RAW WATER PIPING	INDOOR WET PROCESS AREA
121	FILTRATION PLANT	STATIC MIXER AND OVERFLOW	INDOOR WET PROCESS AREA
122	FILTRATION PLANT	DAF TANKS	INDOOR WET PROCESS AREA
123	FILTRATION PLANT	EQUIPMENT PLATFORM	INDOOR WET PROCESS AREA
124	FILTRATION PLANT	VESTIBULE	INDOOR DRY NON-PROCESS AREA
201	FILTRATION PLANT	HVAC	INDOOR DRY NON-PROCESS AREA
202	FILTRATION PLANT	AIR SCOUR	INDOOR DRY PROCESS AREA
203	FILTRATION PLANT	ELECTRICAL ROOM	INDOOR DRY NON-PROCESS AREA
204	FILTRATION PLANT	STORAGE ROOM	INDOOR DRY NON-PROCESS AREA
205	FILTRATION PLANT	PROCESS ANALYSIS ROOM	INDOOR WET PROCESS AREA
206	FILTRATION PLANT	CONTROL ROOM	INDOOR DRY NON-PROCESS AREA
207	FILTRATION PLANT	SCADA ROOM	INDOOR DRY NON-PROCESS AREA
208	FILTRATION PLANT	HVAC	INDOOR DRY NON-PROCESS AREA
209	FILTRATION PLANT	COPY ROOM	INDOOR DRY NON-PROCESS AREA
210	FILTRATION PLANT	CHIEF'S OFFICE	INDOOR DRY NON-PROCESS AREA
211	FILTRATION PLANT	VESTIBULE	INDOOR DRY NON-PROCESS AREA
212	FILTRATION PLANT	MAINTENANCE CLOSET	INDOOR DRY NON-PROCESS AREA
213	FILTRATION PLANT	WC	INDOOR DRY NON-PROCESS AREA
214	FILTRATION PLANT	OPEN OFFICE	INDOOR DRY NON-PROCESS AREA
215	FILTRATION PLANT	HVAC	INDOOR DRY NON-PROCESS AREA
216	FILTRATION PLANT	STORAGE ROOM	INDOOR DRY NON-PROCESS AREA
217	FILTRATION PLANT	HVAC PLENUM	INDOOR DRY NON-PROCESS AREA
218	FILTRATION PLANT	OPERATING LEVEL	INDOOR WET PROCESS AREA
C01	FILTRATION PLANT	CORRIDOR	INDOOR DRY NON-PROCESS AREA
C02	FILTRATION PLANT	CORRIDOR	INDOOR DRY NON-PROCESS AREA
C03	FILTRATION PLANT	CORRIDOR	INDOOR DRY NON-PROCESS AREA
E01	FILTRATION PLANT	ELEVATOR	INDOOR DRY NON-PROCESS AREA
SA	FILTRATION PLANT	STAIR A	INDOOR DRY NON-PROCESS AREA
SB	FILTRATION PLANT	STAIR B	INDOOR DRY NON-PROCESS AREA
SC	FILTRATION PLANT	STAIR C	INDOOR DRY NON-PROCESS AREA
	ELECTRICAL SERVICE BUILDING	ELECTRICAL ROOM	INDOOR DRY NON-PROCESS AREA
	FILTRATION PLANT	INDOOR AREAS/ ROOMS NOT LISTED	INDOOR WET PROCESS AREA
	PUMP STATION	INDOOR AREAS/ ROOMS NOT LISTED	INDOOR WET PROCESS AREA
	SITE	OUTDOOR AREAS	OUTDOOR AREA
	FILTRATION PLANT	OUTDOOR AREAS	OUTDOOR AREA
	PUMP STATION	OUTDOOR AREAS	OUTDOOR AREA

AREA/ROOM DESIGNATION MATERIAL REQUIREMENTS

DISCIPLINE / COMPONENT	AREA DESIGNATIONS					
	INDOOR WET PROCESS AREA	INDOOR DRY PROCESS AREA	INDOOR DRY NON- PROCESS AREA	TYPE 1 CHEMICAL STORAGE/TRANSFER AREA	TYPE 2 CHEMICAL STORAGE/TRANSFER AREA	OUTDOOR AREA
PROCESS MECHANICAL						
PIPE SUPPORTS	Per Section 40 05 07	See Section 40 05 07	See Section 40 05 08	FRP	FRP	316L SST, NOTE 2
PIPE SUPPORTS FOR SST AIR PIPE	316L SST, NOTE 2	304L SST, NOTE 2	304L SST	FRP	FRP	304L SST, NOTE 2
PIPE SUPPORT ANCHORS	316L SST	316L SST	304L SST	HASTELLOY C	316L SST	316L SST, NOTE 2
EQUIPMENT & CHEMICAL TANK ANCHORS	316L SST	316L SST	316L SST	HASTELLOY C	316L SST	316L SST
PIPE SUPPORT FASTENING HARDWARE AND THREADED ROD	Per Section 40 05 07	Per Section 40 05 07	HOT DIP GALV	FRP	FRP	316L SST, NOTE 2
STRUCTURAL						
GUARDS & RAILINGS	ALUMINUM OR FRP	ALUMINUM OR FRP	ALUMINUM OR FRP	FRP	FRP	ALUMINUM
GRATING	ALUMINUM OR FRP	ALUMINUM OR FRP	ALUMINUM OR FRP	FRP	FRP	ALUMINUM
GUARDS, RAILINGS, & GRATING ANCHORS	316L SST	304L SST	304L SST	HASTELLOY C	316L SST	316L SST
GUARDS, RAILINGS, & GRATING FASTENING HARDWARE	316L SST	304L SST	304L SST	316L SST	316L SST	304L SST
WATERSTOPS	PVC	PVC	PVC	CHEMICAL RESISTANT TFE	CHEMICAL RESISTANT TFE	PVC
HVAC						
DUCT HANGERS	316L SST	304L SST	HOT DIP GALV	FRP, NOTE 3	316L SST	304L SST
DUCT HANGER ANCHORS	316L SST	304L SST	HOT DIP GALV	HASTELLOY C, NOTE 4	316L SST	304L SST
DUCT HANGER FASTENING HARDWARE AND THREADED ROD	316L SST	304L SST	HOT DIP GALV	FRP, NOTE 3	316L SST	304L SST
PLUMBING						
PIPE HANGERS	304L SST	304L SST	HOT DIP GALV	FRP, NOTE 3	316L SST	304L SST
HANGER ANCHORS	316L SST	304L SST	HOT DIP GALV	HASTELLOY C, NOTE 4	316L SST	304L SST
HANGER FASTENING HARDWARE AND THREADED ROD	304L SST	304L SST	HOT DIP GALV	FRP, NOTE 3	316L SST	304L SST
ELECTRICAL						
SUPPORT CHANNELS AND THREADED ROD	316L SST	HOT DIP GALV	HOT DIP GALV	FRP	316L SST	304L SST
ANCHORS	316L SST	304L SST	304L SST	HASTELLOY C	316L SST	316L SST
FASTENING HARDWARE	316L SST	304L SST	HOT DIP GALV	FRP	316L SST	304L SST

NOTES:
1. THIS TABLE PROVIDES MINIMUM ACCEPTABLE MATERIAL REQUIREMENTS IF NO FURTHER GUIDANCE IS GIVEN IN DRAWINGS AND SPECIFICATIONS. ALTERNATE MATERIALS MAY BE REQUIRED WHERE SPECIFICALLY IDENTIFIED IN DRAWINGS OR SPECIFICATIONS.
2. PIPE SUPPORT MATERIALS (SUPPORTS, ANCHORS, FASTENING HARDWARE) SUBMERGED OR PARTIALLY SUBMERGED IN A PROCESS TANK SHALL BE CONSTRUCTED OF 316L SST.
3. VERIFY RESIN IS COMPATIBLE WITH THE CHEMICAL ENVIRONMENT. SEE SPECIFICATION 06 51 00 GLASS FIBER AND RESIN FABRICATION FOR FURTHER INFORMATION.
4. FOR ANCHROS EXPOSED TO SODIUM HYPOCHLORITE AND FERRIC CHLORIDE, TITANIUM ANCHORS MAY BE USED IN LIEU OF HASTELLOY C ANCHORS. FIBERGLASS FASTENERS MAY BE USED AS AN ALTERNATIVE TO HASTELLOY C ANCHORS PROVIDED ANCHOR STRENGTH CRITERIA CAN BE MET.

WARNING
IT IS A VIOLATION OF SECTION 7209.2 OF THE NEW YORK STATE EDUCATION LAW FOR ANY PERSON, UNLESS ACTING UNDER THE DIRECTION OF A LICENSED PROFESSIONAL ENGINEER, TO ALTER IN ANY WAY PLANS, SPECIFICATIONS, PLATS OR REPORTS TO WHICH THE SEAL OF A PROFESSIONAL ENGINEER HAS BEEN APPLIED. IF AN ITEM BEARING THE SEAL OF A PROFESSIONAL ENGINEER IS ALTERED, THE ALTERING ENGINEER SHALL AFFIX TO THE ITEM HIS SEAL AND THE NOTATION "ALTERED BY" FOLLOWED BY HIS SIGNATURE, THE DATE, AND A SPECIFIC DESCRIPTION OF THE ALTERATION.

REV	ISSUED FOR	DATE	BY

PROJECT ENGINEER: R. FROST
DESIGNED BY: R. FROST
DRAWN BY: B. CASULL
CHECKED BY: E. FELDMAN
IF THIS BAR DOES NOT MEASURE 1" THEN DRAWING IS NOT TO FULL SCALE 0 1/2" 1"

BID SET

STATE OF NEW YORK · EILEEN McCARTHY FELDMAN · 085018 · LICENSED PROFESSIONAL ENGINEER

Hazen

HAZEN AND SAWYER
498 SEVENTH AVENUE, 11th FLOOR
NEW YORK, NEW YORK 10018

WESTCHESTER JOINT WATER WORKS
MAMARONECK, NY

RYE LAKE WATER FILTRATION PLANT
HARRISON, NY

GENERAL
GENERAL AREA DESIGNATION TABLES

DATE: FEB 2025
HAZEN NO.: 90388-000
CONTRACT NO.: A1364-A
DRAWING NUMBER: G-005

Autodesk Docs://90388-000_Rye_Lake_Filtration/90388-000-GENL.rvt
2/6/2025 5:33:14 PM

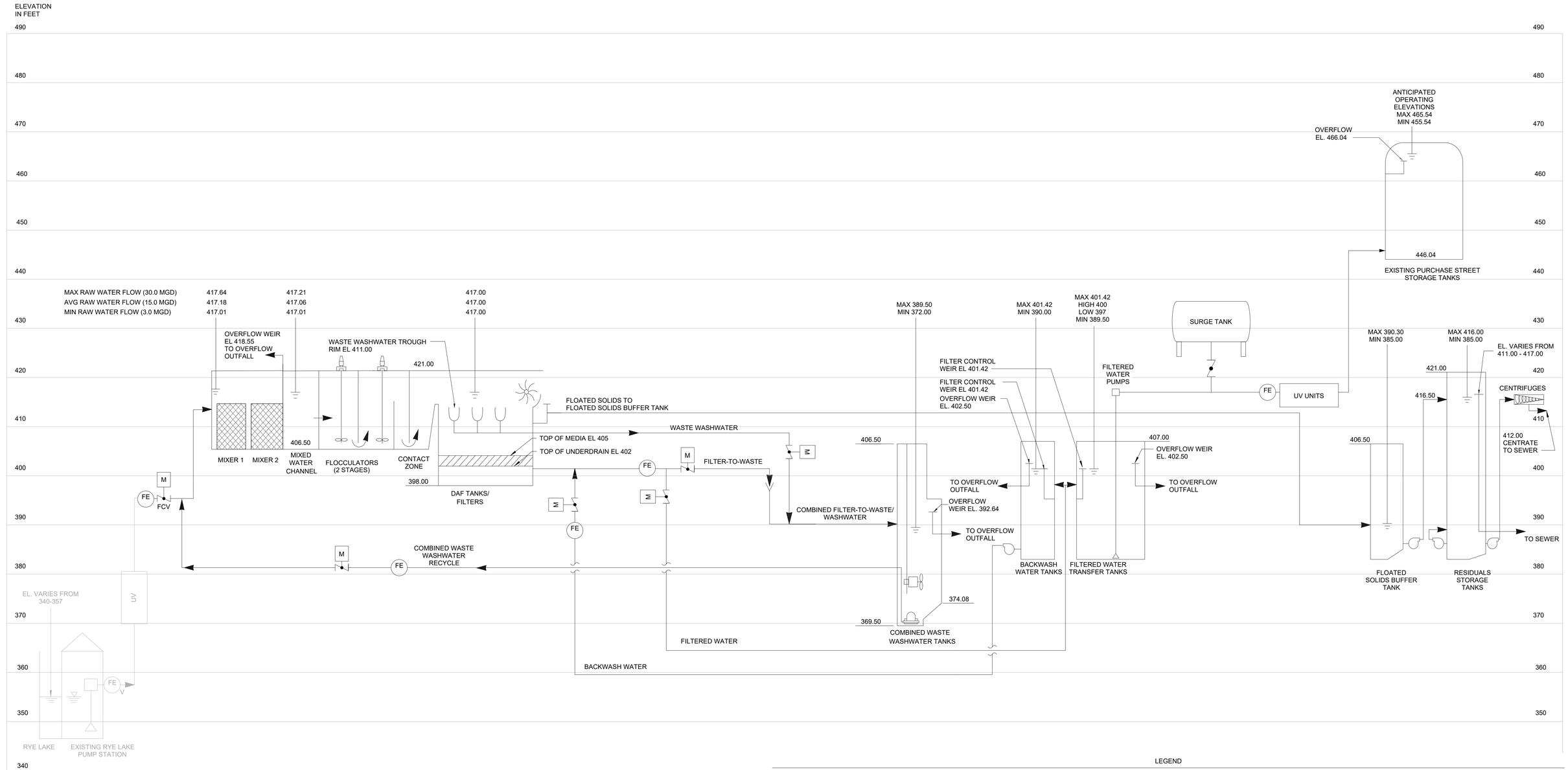

NOTES:

1. ALL ELEVATIONS SHOWN ARE IN NORTH AMERICAN VERTICAL DATUM OF 1988 (NAVD 88).
2. LEGEND PROVIDED ON PROCESS FLOW SCHEMATIC.

LEGEND

	AIR GAP	M FCV	FLOW CONTROL VALVE	M	MOTORIZED VALVE		ROTARY LOBE PUMP	TB	TURBIDITY ANALYZER
	BALL VALVE	F	FLUORIDE ANALYZER	pH	pH ANALYZER	SCD	STREAMING CURRENT DETECTOR	UV 254	UV254 ANALYZER
	BUTTERFLY VALVE	FE	MAGNETIC FLOW METER	PO4	PHOSPHATE ANALYZER		SUBMERSIBLE MIXER	FE V	VENTURI FLOW METER
	CENTRIFUGAL PUMP	M	MOTOR		PLUG VALVE		SUBMERSIBLE PUMP		VERTICAL TURBINE PUMP
CL	CHLORINE RESIDUAL ANALYZER					T	TEMPERATURE ANALYZER		

WARNING

IT IS A VIOLATION OF SECTION 7209.2 OF THE NEW YORK STATE EDUCATION LAW FOR ANY PERSON, UNLESS ACTING UNDER THE DIRECTION OF A LICENSED PROFESSIONAL ENGINEER, TO ALTER IN ANY WAY PLANS, SPECIFICATIONS, PLATS OR REPORTS TO WHICH THE SEAL OF A PROFESSIONAL ENGINEER HAS BEEN APPLIED. IF AN ITEM BEARING THE SEAL OF A PROFESSIONAL ENGINEER IS ALTERED, THE ALTERING ENGINEER SHALL AFFIX TO THE ITEM HIS SEAL AND THE NOTATION "ALTERED BY" FOLLOWED BY HIS SIGNATURE, THE DATE, AND A SPECIFIC DESCRIPTION OF THE ALTERATION.

REV	ISSUED FOR	DATE	BY

PROJECT ENGINEER:	R. FROST
DESIGNED BY:	R. FROST
DRAWN BY:	B. CASULL
CHECKED BY:	E. FELDMAN
IF THIS BAR DOES NOT MEASURE 1" THEN DRAWING IS NOT TO FULL SCALE	0 1/2" 1"

BID SET

STATE OF NEW YORK · ELLEN McCARTHY FELDMAN · 085018 · LICENSED PROFESSIONAL ENGINEER

Hazen

HAZEN AND SAWYER
498 SEVENTH AVENUE, 11th FLOOR
NEW YORK, NEW YORK 10018

WESTCHESTER JOINT WATER WORKS
MAMARONECK, NY

RYE LAKE WATER FILTRATION PLANT
HARRISON, NY

GENERAL
HYDRAULIC PROFILE

DATE:	FEB 2025
HAZEN NO.:	90388-000
CONTRACT NO.:	A1364-A
DRAWING NUMBER:	G-010

Autodesk Docs://90388-000_Rye_Lake_Filtration/90388-000-GENL.rvt
2/6/2025 5:33:15 PM

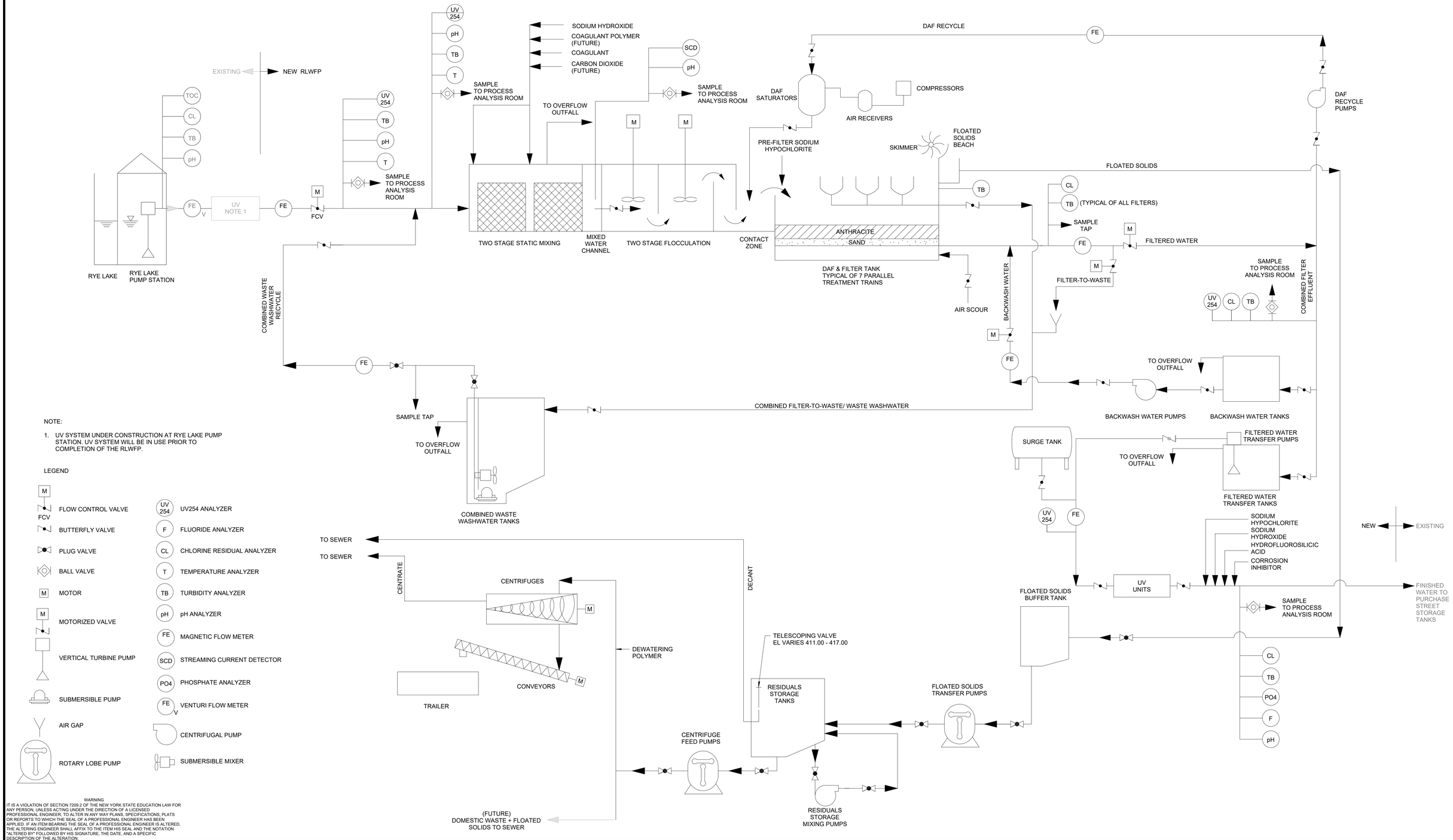

NOTE:

1. UV SYSTEM UNDER CONSTRUCTION AT RYE LAKE PUMP STATION. UV SYSTEM WILL BE IN USE PRIOR TO COMPLETION OF THE RLWFP.

LEGEND

- M — FLOW CONTROL VALVE (FCV)
- BUTTERFLY VALVE
- PLUG VALVE
- BALL VALVE
- MOTOR
- MOTORIZED VALVE
- VERTICAL TURBINE PUMP
- SUBMERSIBLE PUMP
- AIR GAP
- ROTARY LOBE PUMP
- UV254 — UV254 ANALYZER
- F — FLUORIDE ANALYZER
- CL — CHLORINE RESIDUAL ANALYZER
- T — TEMPERATURE ANALYZER
- TB — TURBIDITY ANALYZER
- pH — pH ANALYZER
- FE — MAGNETIC FLOW METER
- SCD — STREAMING CURRENT DETECTOR
- PO4 — PHOSPHATE ANALYZER
- FE V — VENTURI FLOW METER
- CENTRIFUGAL PUMP
- SUBMERSIBLE MIXER

WARNING
IT IS A VIOLATION OF SECTION 7209.2 OF THE NEW YORK STATE EDUCATION LAW FOR ANY PERSON, UNLESS ACTING UNDER THE DIRECTION OF A LICENSED PROFESSIONAL ENGINEER, TO ALTER IN ANY WAY PLANS, SPECIFICATIONS, PLATS OR REPORTS TO WHICH THE SEAL OF A PROFESSIONAL ENGINEER HAS BEEN APPLIED. IF AN ITEM BEARING THE SEAL OF A PROFESSIONAL ENGINEER IS ALTERED, THE ALTERING ENGINEER SHALL AFFIX TO THE ITEM HIS SEAL AND THE NOTATION "ALTERED BY" FOLLOWED BY HIS SIGNATURE, THE DATE, AND A SPECIFIC DESCRIPTION OF THE ALTERATION.

REV	ISSUED FOR	DATE	BY

PROJECT ENGINEER:	R. FROST
DESIGNED BY:	R. FROST
DRAWN BY:	B. CASULL
CHECKED BY:	E. FELDMAN

IF THIS BAR DOES NOT MEASURE 1" THEN DRAWING IS NOT TO FULL SCALE — 0 1/2" 1"

BID SET

STATE OF NEW YORK · EDWARD E. McCARTHY · 085018 · LICENSED PROFESSIONAL ENGINEER

Hazen
HAZEN AND SAWYER
498 SEVENTH AVENUE, 11th FLOOR
NEW YORK, NEW YORK 10018

WESTCHESTER JOINT WATER WORKS
MAMARONECK, NY

RYE LAKE WATER FILTRATION PLANT
HARRISON, NY

GENERAL PROCESS FLOW SCHEMATIC

DATE:	FEB 2025
HAZEN NO.:	90388-000
CONTRACT NO.:	A1364-A
DRAWING NUMBER:	G-011

Autodesk Docs://90388-000_Rye_Lake_Filtration/90388-000-GENL.rvt
2/6/2025 5:33:15 PM

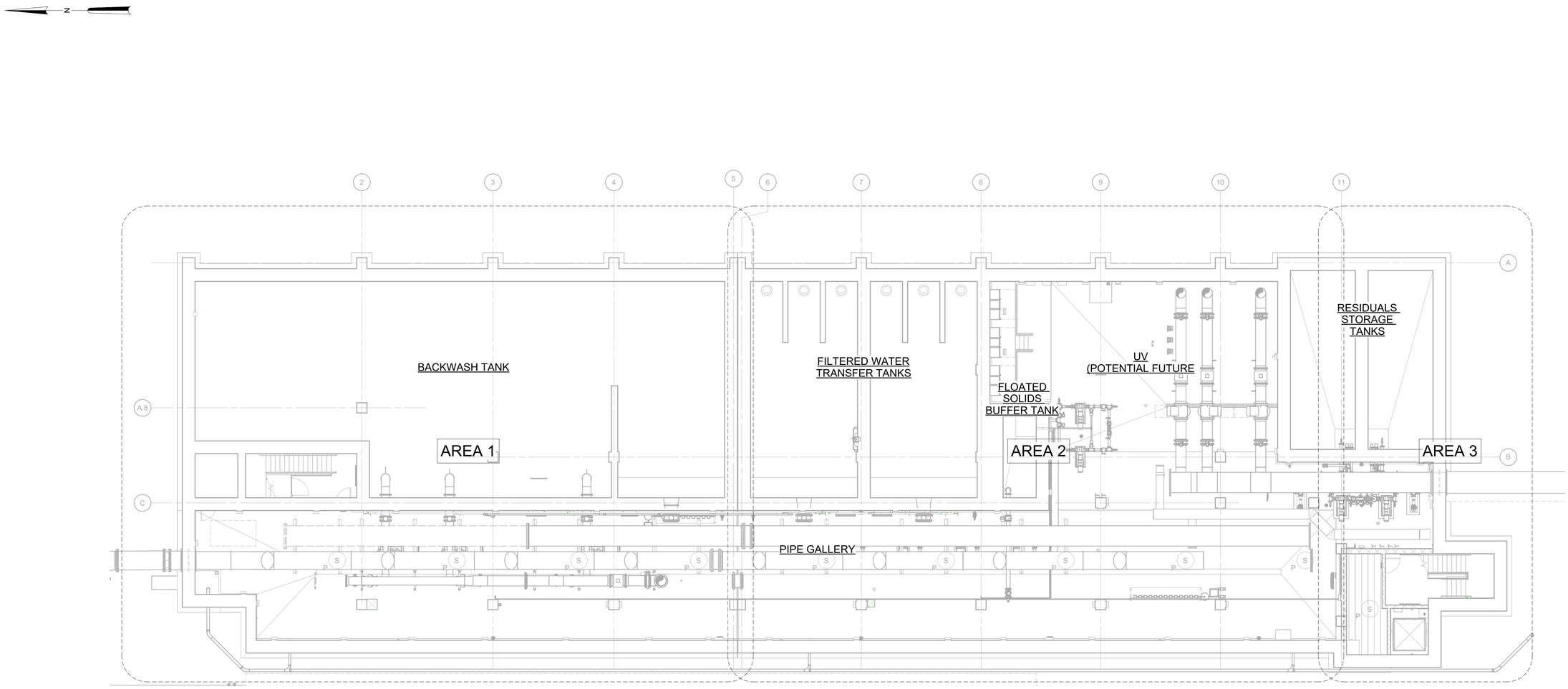

GENERAL ARRANGEMENT PLAN EL 384.00

3/32" = 1'-0"

WARNING
IT IS A VIOLATION OF SECTION 7209.2 OF THE NEW YORK STATE EDUCATION LAW FOR ANY PERSON, UNLESS ACTING UNDER THE DIRECTION OF A LICENSED PROFESSIONAL ENGINEER, TO ALTER IN ANY WAY PLANS, SPECIFICATIONS, PLATS OR REPORTS TO WHICH THE SEAL OF A PROFESSIONAL ENGINEER HAS BEEN APPLIED. IF AN ITEM BEARING THE SEAL OF A PROFESSIONAL ENGINEER IS ALTERED, THE ALTERING ENGINEER SHALL AFFIX TO THE ITEM HIS SEAL AND THE NOTATION "ALTERED BY" FOLLOWED BY HIS SIGNATURE, THE DATE, AND A SPECIFIC DESCRIPTION OF THE ALTERATION.

3/32" = 1'-0" 10 8 6 4 2 0 11'

REV	ISSUED FOR	DATE	BY

PROJECT ENGINEER:	R. FROST
DESIGNED BY:	R. FROST
DRAWN BY:	B. CASULL
CHECKED BY:	E. FELDMAN
IF THIS BAR DOES NOT MEASURE 1" THEN DRAWING IS NOT TO FULL SCALE	0 1/2" 1"

BID SET

STATE OF NEW YORK · ELLEN McCARTHY FELDMAN · 085018 · LICENSED PROFESSIONAL ENGINEER

Hazen

HAZEN AND SAWYER
498 SEVENTH AVENUE, 11th FLOOR
NEW YORK, NEW YORK 10018

WESTCHESTER JOINT WATER WORKS
MAMARONECK, NY

RYE LAKE WATER FILTRATION PLANT
HARRISON, NY

GENERAL
GENERAL ARRANGEMENT PLAN EL 384.00

DATE:	FEB 2025
HAZEN NO.:	90388-000
CONTRACT NO.:	A1364-A
DRAWING NUMBER:	G-100

Autodesk Docs://90388-000_Rye_Lake_Filtration/90388-000-GENL.rvt
2/6/2025 5:33:18 PM

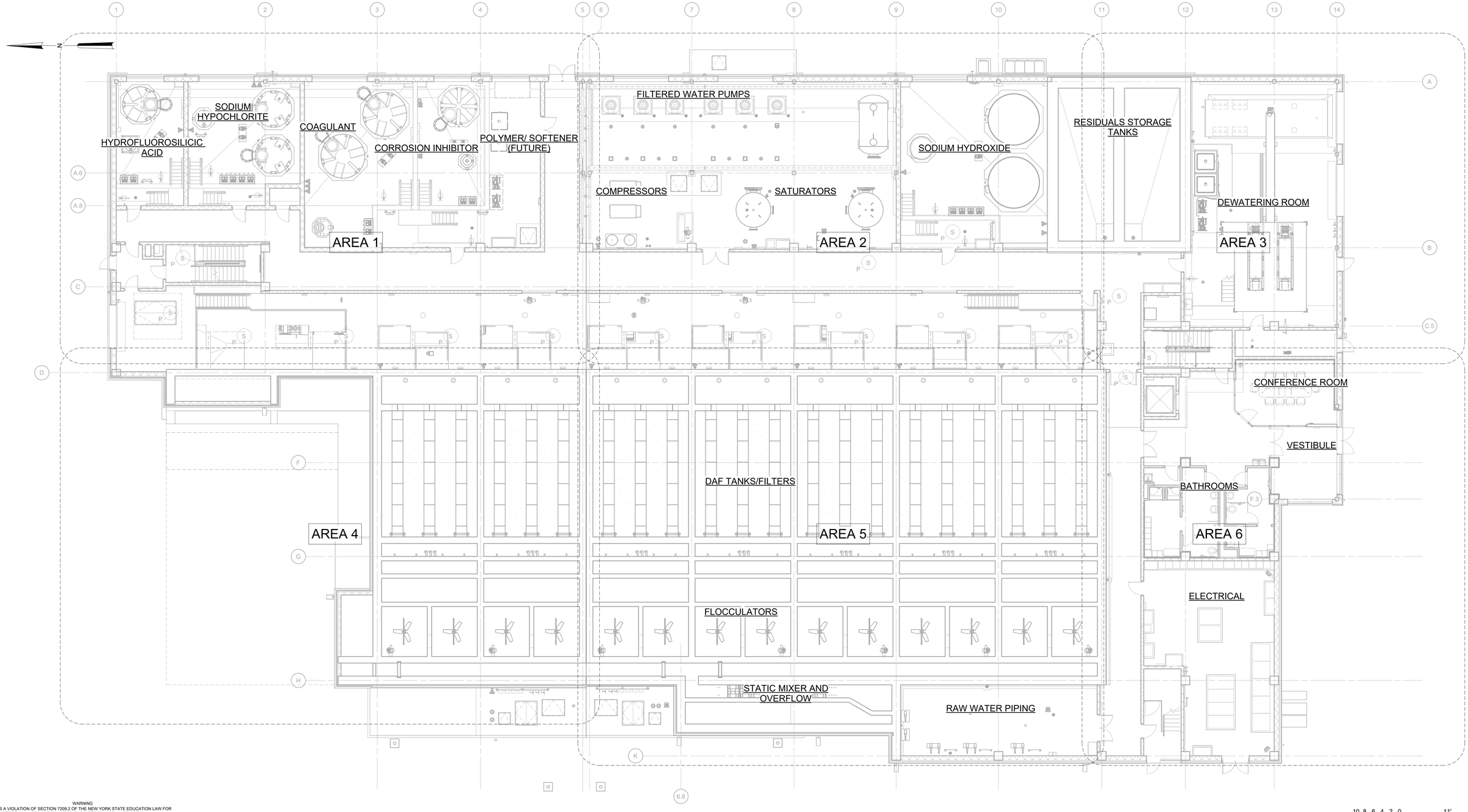

WARNING
IT IS A VIOLATION OF SECTION 7209.2 OF THE NEW YORK STATE EDUCATION LAW FOR ANY PERSON, UNLESS ACTING UNDER THE DIRECTION OF A LICENSED PROFESSIONAL ENGINEER, TO ALTER IN ANY WAY PLANS, SPECIFICATIONS, PLATS OR REPORTS TO WHICH THE SEAL OF A PROFESSIONAL ENGINEER HAS BEEN APPLIED. IF AN ITEM BEARING THE SEAL OF A PROFESSIONAL ENGINEER IS ALTERED, THE ALTERING ENGINEER SHALL AFFIX TO THE ITEM HIS SEAL AND THE NOTATION "ALTERED BY" FOLLOWED BY HIS SIGNATURE, THE DATE, AND A SPECIFIC DESCRIPTION OF THE ALTERATION.

GENERAL ARRANGEMENT PLAN EL 407.00

3/32" = 1'-0"

3/32" = 1'-0" 10 8 6 4 2 0 11'

REV	ISSUED FOR	DATE	BY

PROJECT ENGINEER:	R. FROST
DESIGNED BY:	R. FROST
DRAWN BY:	B. CASULL
CHECKED BY:	E. FELDMAN

IF THIS BAR DOES NOT MEASURE 1" THEN DRAWING IS NOT TO FULL SCALE 0 1/2" 1"

BID SET

Hazen
HAZEN AND SAWYER
498 SEVENTH AVENUE, 11th FLOOR
NEW YORK, NEW YORK 10018

WESTCHESTER JOINT WATER WORKS
MAMARONECK, NY

RYE LAKE WATER FILTRATION PLANT
HARRISON, NY

GENERAL
GENERAL ARRANGEMENT PLAN EL 407.00

DATE:	FEB 2025
HAZEN NO.:	90388-000
CONTRACT NO.:	A1364-A
DRAWING NUMBER:	G-101

Autodesk Docs://90388-000_Rye_Lake_Filtration/90388-000-GENL.rvt
2/6/2025 5:33:25 PM

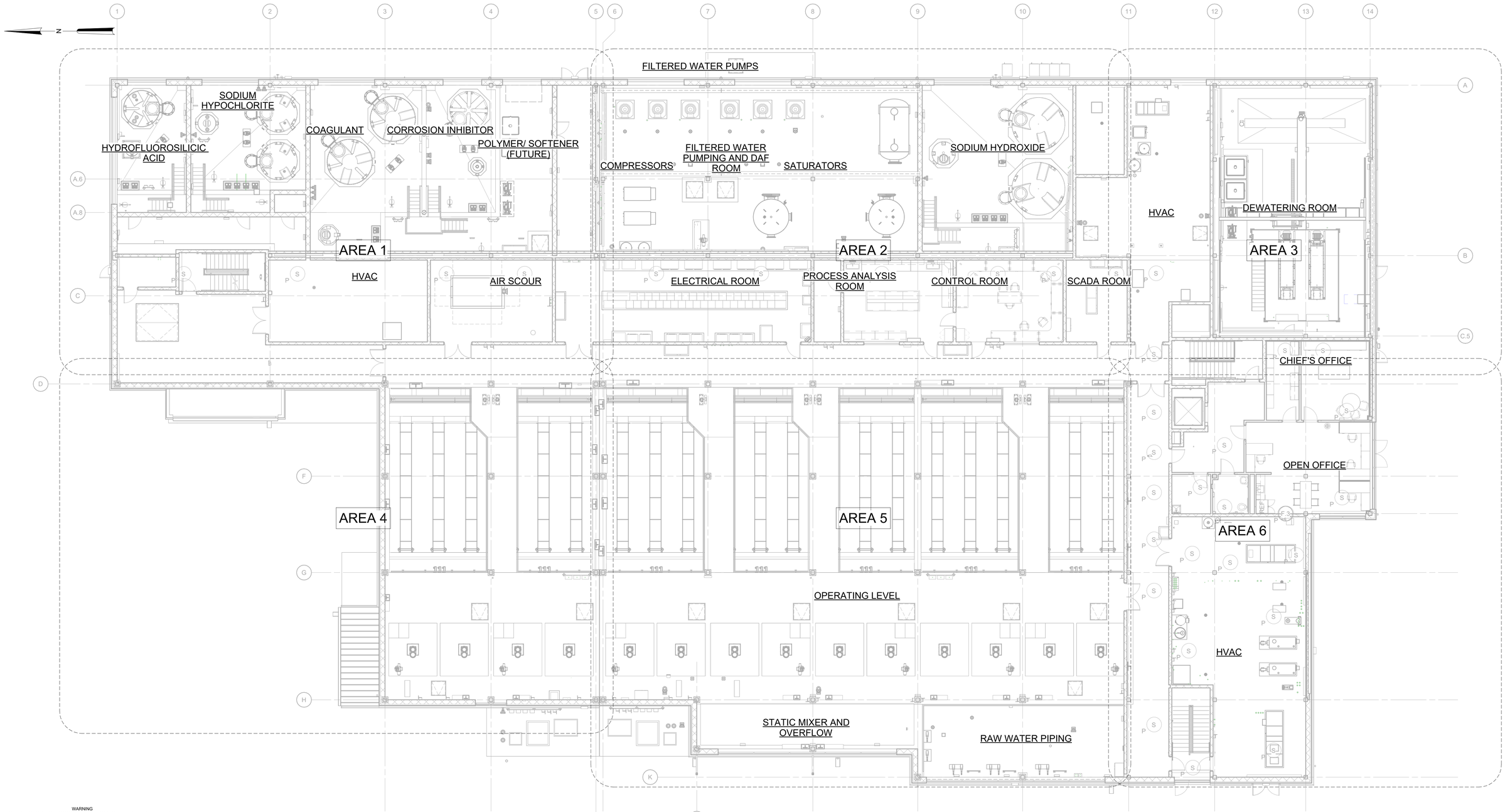

WARNING
IT IS A VIOLATION OF SECTION 7209.2 OF THE NEW YORK STATE EDUCATION LAW FOR ANY PERSON, UNLESS ACTING UNDER THE DIRECTION OF A LICENSED PROFESSIONAL ENGINEER, TO ALTER IN ANY WAY PLANS, SPECIFICATIONS, PLATS OR REPORTS TO WHICH THE SEAL OF A PROFESSIONAL ENGINEER HAS BEEN APPLIED. IF AN ITEM BEARING THE SEAL OF A PROFESSIONAL ENGINEER IS ALTERED, THE ALTERING ENGINEER SHALL AFFIX TO THE ITEM HIS SEAL AND THE NOTATION "ALTERED BY" FOLLOWED BY HIS SIGNATURE, THE DATE, AND A SPECIFIC DESCRIPTION OF THE ALTERATION.

GENERAL ARRANGEMENT PLAN EL 421.00

3/32" = 1'-0"

10 8 6 4 2 0 11'

REV	ISSUED FOR	DATE	BY

PROJECT ENGINEER:	R. FROST
DESIGNED BY:	R. FROST
DRAWN BY:	B. CASULL
CHECKED BY:	E. FELDMAN
IF THIS BAR DOES NOT MEASURE 1" THEN DRAWING IS NOT TO FULL SCALE	0 1/2" 1"

BID SET

STATE OF NEW YORK · EILEEN M. McCARTHY · 085018 · LICENSED PROFESSIONAL ENGINEER

Hazen

HAZEN AND SAWYER
498 SEVENTH AVENUE, 11th FLOOR
NEW YORK, NEW YORK 10018

WESTCHESTER JOINT WATER WORKS
MAMARONECK, NY

RYE LAKE WATER FILTRATION PLANT
HARRISON, NY

GENERAL
GENERAL ARRANGEMENT PLAN EL 421.00

DATE:	FEB 2025
HAZEN NO.:	90388-000
CONTRACT NO.:	A1364-A
DRAWING NUMBER:	G-102

Autodesk Docs://90388-000_Rye_Lake_Filtration/90388-000-GENL.rvt
2/6/2025 5:33:32 PM

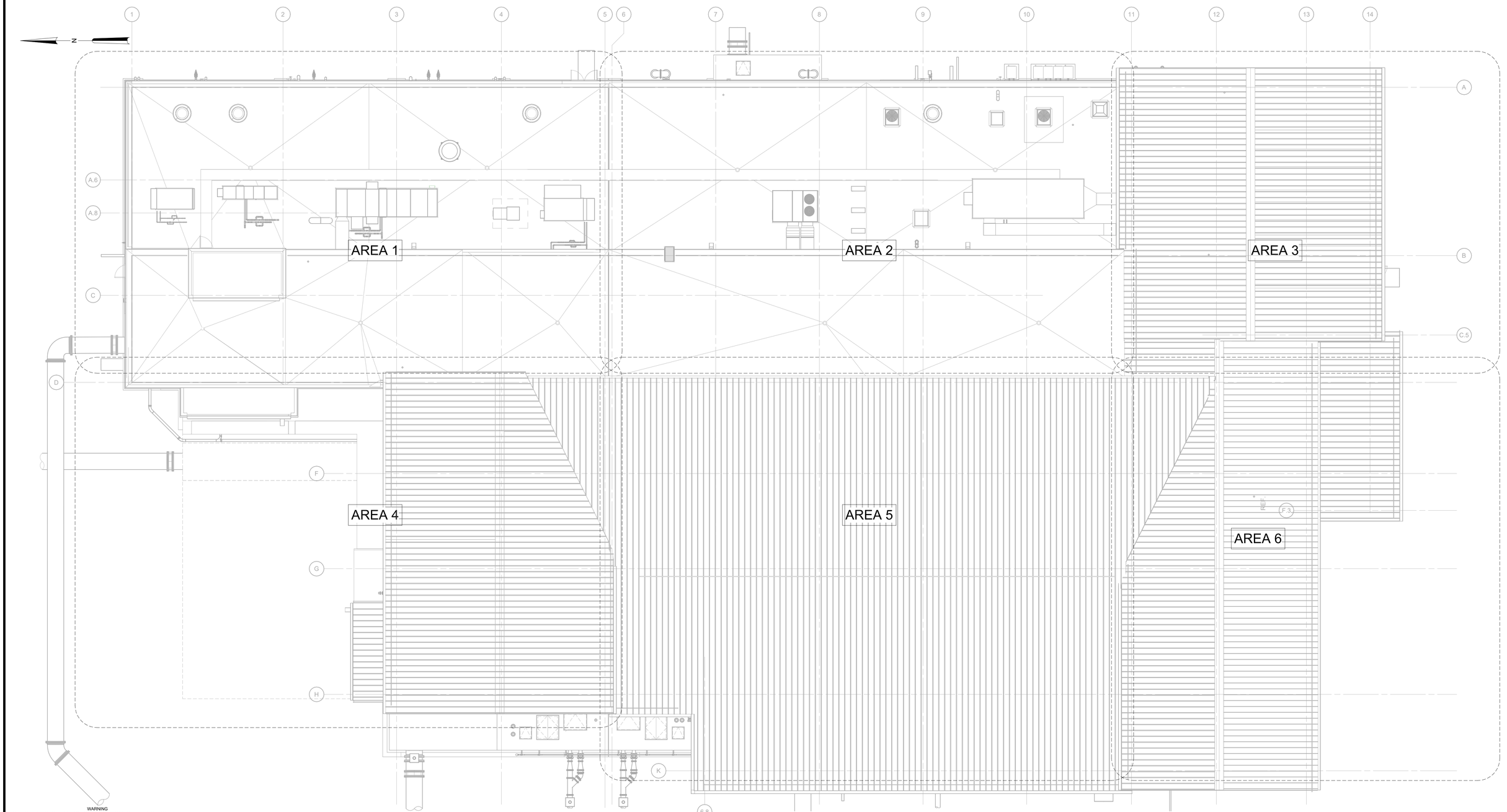

GENERAL ARRANGEMENT PLAN ROOF

3/32" = 1'-0"

3/32" = 1'-0"

10 8 6 4 2 0 11'

WARNING
IT IS A VIOLATION OF SECTION 7209.2 OF THE NEW YORK STATE EDUCATION LAW FOR ANY PERSON, UNLESS ACTING UNDER THE DIRECTION OF A LICENSED PROFESSIONAL ENGINEER, TO ALTER IN ANY WAY PLANS, SPECIFICATIONS, PLATS OR REPORTS TO WHICH THE SEAL OF A PROFESSIONAL ENGINEER HAS BEEN APPLIED. IF AN ITEM BEARING THE SEAL OF A PROFESSIONAL ENGINEER IS ALTERED, THE ALTERING ENGINEER SHALL AFFIX TO THE ITEM HIS SEAL AND THE NOTATION "ALTERED BY" FOLLOWED BY HIS SIGNATURE, THE DATE, AND A SPECIFIC DESCRIPTION OF THE ALTERATION.

REV	ISSUED FOR	DATE	BY

PROJECT ENGINEER:	R. FROST
DESIGNED BY:	R. FROST
DRAWN BY:	B. CASULL
CHECKED BY:	E. FELDMAN
IF THIS BAR DOES NOT MEASURE 1" THEN DRAWING IS NOT TO FULL SCALE	0 1/2" 1"

BID SET

STATE OF NEW YORK · McCARTHY · 085018 · LICENSED PROFESSIONAL ENGINEER

Hazen

HAZEN AND SAWYER
498 SEVENTH AVENUE, 11th FLOOR
NEW YORK, NEW YORK 10018

WESTCHESTER JOINT WATER WORKS
MAMARONECK, NY

RYE LAKE WATER FILTRATION PLANT
HARRISON, NY

GENERAL
GENERAL ARRANGEMENT PLAN ROOF

DATE:	FEB 2025
HAZEN NO.:	90388-000
CONTRACT NO.:	A1364-A
DRAWING NUMBER:	G-103

Autodesk Docs://90388-000_Rye_Lake_Filtration/90388-000-GENL.rvt
2/6/2025 5:33:46 PM

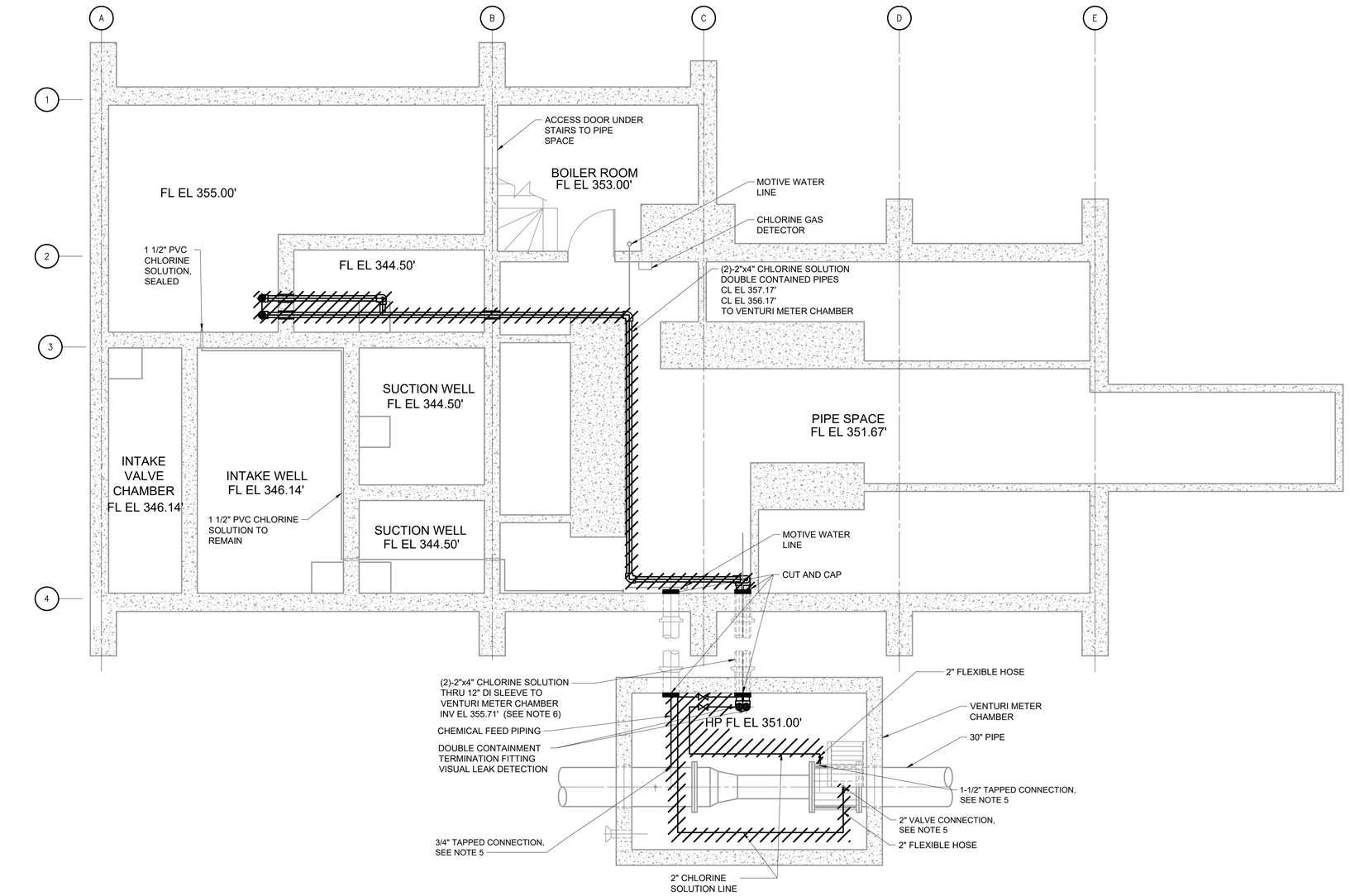

DEMOLITION PLAN BELOW EL 344.50'

SCALE: 1/4" = 1'-0"

NOTES:

1. OPERATION OF EXISTING CHEMICAL SYSTEMS ARE REQUIRED UNTIL WATER FILTRATION PLANT IS COMMISSIONED AND FULLY OPERATIONAL. CONTRACTOR SHALL SEQUENCE DEMOLITION WORK ACCORDINGLY.
2. CONTRACTOR SHALL DISPOSE OF PROCESS WATER AND ALL RESIDUAL GASEOUS, LIQUID, AND SOLID CHEMICALS IN ACCORDANCE WITH APPLICABLE LAWS, REGULATIONS, AND ENVIRONMENTAL, HEALTH, AND SAFETY (EHS) REQUIREMENTS.
3. ALL SUPPORTS, PEDESTALS, AND ANCHORS SHALL BE REMOVED WITH THE EQUIPMENT IN ACCORDANCE WITH SECTION 02 41 00 - DEMOLITION UNLESS OTHERWISE NOTED.
4. UPON COMPLETION OF THE REMOVALS AS SHOWN, THE CHLORINE ROOM AND PUMP AND EQUIPMENT ROOM SHALL BE CLEAN OF ALL ITEMS OF MECHANICAL AND ELECTRICAL EQUIPMENT, PIPING CONDUIT, CABLE, CONCRETE PADS AND PEDESTALS, AND SUPPORT STRUCTURES DOWN TO A BROOM SWEPT FLOOR. PATCH FLOOR TO LEVEL SURFACE IN ACCORDANCE WITH STRUCTURAL DETAIL S-03-0480.
5. TAPPED CONNECTIONS SHALL BE PLUGGED WITH NPT PIPE PLUGS OF THE APPROPRIATE SIZING AS SPECIFIED IN THE DRAWING.
6. INTERNAL PIPES OF EXISTING DOUBLE CONTAINMENT PIPING SHALL BE REMOVED AND OUTER SLEEVE TO REMAIN AND BE ABANDONED.

WARNING
IT IS A VIOLATION OF SECTION 7209.2 OF THE NEW YORK STATE EDUCATION LAW FOR ANY PERSON, UNLESS ACTING UNDER THE DIRECTION OF A LICENSED PROFESSIONAL ENGINEER, TO ALTER IN ANY WAY PLANS, SPECIFICATIONS, PLATS OR REPORTS TO WHICH THE SEAL OF A PROFESSIONAL ENGINEER HAS BEEN APPLIED. IF AN ITEM BEARING THE SEAL OF A PROFESSIONAL ENGINEER IS ALTERED, THE ALTERING ENGINEER SHALL AFFIX TO THE ITEM HIS SEAL AND THE NOTATION "ALTERED BY" FOLLOWED BY HIS SIGNATURE, THE DATE, AND A SPECIFIC DESCRIPTION OF THE ALTERATION.

1/4"=1'-0" 1 0 1 2 3 7'

REV	ISSUED FOR	DATE	BY

PROJECT ENGINEER: R. FROST
DESIGNED BY: R. FROST
DRAWN BY: B. CASULL
CHECKED BY: E. FELDMAN
IF THIS BAR DOES NOT MEASURE 1" THEN DRAWING IS NOT TO FULL SCALE 0 1/2" 1"

BID SET

STATE OF NEW YORK · E. McCARTHY FELDMAN · 085018 · LICENSED PROFESSIONAL ENGINEER

Hazen
HAZEN AND SAWYER
498 SEVENTH AVENUE, 11th FLOOR
NEW YORK, NEW YORK 10018

WESTCHESTER JOINT WATER WORKS
MAMARONECK, NY

RYE LAKE WATER FILTRATION PLANT
HARRISON, NY

EXISTING RYE LAKE CHEMICAL BUILDING
DEMOLITION PLAN BELOW EL 358.50'

DATE: FEB 2025
HAZEN NO.: 90388-000
CONTRACT NO.: A1364-A
DRAWING NUMBER: D-500

File: C:\USERS\BCASULL\DCA\CDOCS\HAZEN AND SAWYER\90388-000_RYE_LAKE_FILTRATION\PROJECT FILES\PROJECTWISEMECHANICALID-500 Saved by BCASULL Save date: 2/6/2025 5:31 PM
PLOT DATE: 2/6/2025 5:31 PM BY: BCASULL

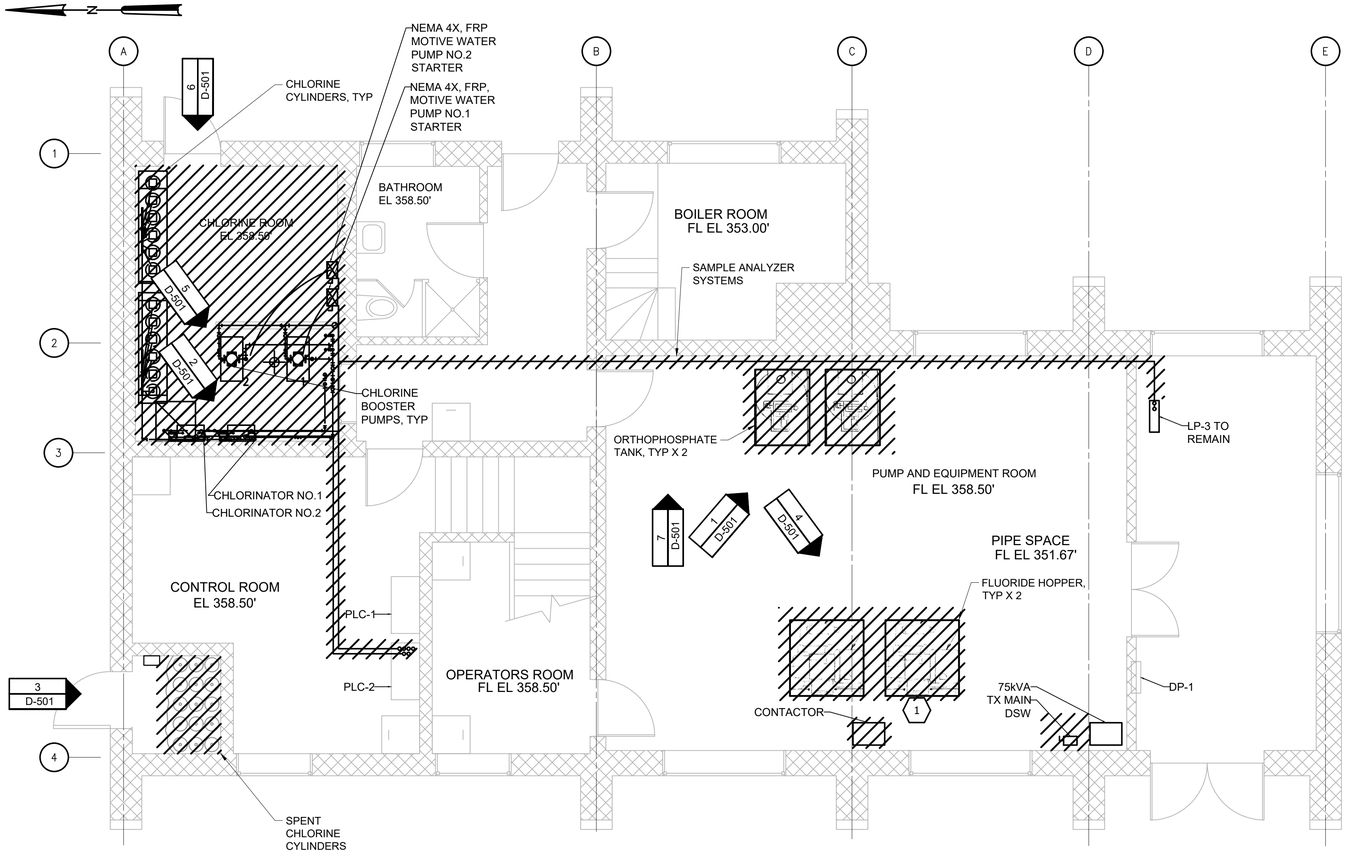

DEMOLITION PLAN EL 358.50

SCALE: 1/4" = 1'-0"

NOTES:

1. OPERATION OF EXISTING CHEMICAL SYSTEMS ARE REQUIRED UNTIL WATER FILTRATION PLANT IS COMMISSIONED AND FULLY OPERATIONAL. CONTRACTOR SHALL SEQUENCE DEMOLITION WORK ACCORDINGLY.
2. CONTRACTOR SHALL DISPOSE OF PROCESS WATER AND ALL RESIDUAL GASEOUS, LIQUID, AND SOLID CHEMICALS IN ACCORDANCE WITH APPLICABLE LAWS, REGULATIONS, AND ENVIRONMENTAL, HEALTH, AND SAFETY (EHS) REQUIREMENTS.
3. ALL SUPPORTS, PEDESTALS, AND ANCHORS SHALL BE REMOVED WITH THE EQUIPMENT IN ACCORDANCE WITH SECTION 02 41 00 - DEMOLITION UNLESS OTHERWISE NOTED.
4. UPON COMPLETION OF THE REMOVALS AS SHOWN, THE CHLORINE ROOM AND PUMP AND EQUIPMENT ROOM SHALL BE CLEAN OF ALL ITEMS OF MECHANICAL AND ELECTRICAL EQUIPMENT, PIPING, CONDUIT, CABLE, CONCRETE PADS AND PEDESTALS, AND SUPPORT STRUCTURES DOWN TO A BROOM SWEPT FLOOR. PATCH FLOOR TO LEVEL SURFACE.
5. TURBIDITY ANALYZER AND ASSOCIATED TUBING, ELECTRICAL, AND DRAINAGE TO REMAIN.

WARNING
IT IS A VIOLATION OF SECTION 7209.2 OF THE NEW YORK STATE EDUCATION LAW FOR ANY PERSON, UNLESS ACTING UNDER THE DIRECTION OF A LICENSED PROFESSIONAL ENGINEER, TO ALTER IN ANY WAY PLANS, SPECIFICATIONS, PLATS OR REPORTS TO WHICH THE SEAL OF A PROFESSIONAL ENGINEER HAS BEEN APPLIED. IF AN ITEM BEARING THE SEAL OF A PROFESSIONAL ENGINEER IS ALTERED, THE ALTERING ENGINEER SHALL AFFIX TO THE ITEM HIS SEAL AND THE NOTATION "ALTERED BY" FOLLOWED BY HIS SIGNATURE, THE DATE, AND A SPECIFIC DESCRIPTION OF THE ALTERATION.



ORTHOPHOSPHATE SYSTEMS

PHOTO 1 | NO SCALE | D-501

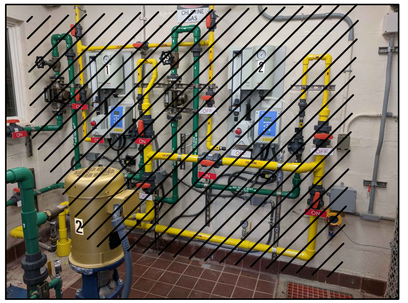

CHLORINE FEED SYSTEM

PHOTO 2 | NO SCALE | D-501



SPENT CHLORINE CYLINDER CLOSET

PHOTO 3 | NO SCALE | D-501



FLUORIDE HOPPER SYSTEMS

PHOTO 4 | NO SCALE | D-501



CHLORINE BOOSTER PUMPS

PHOTO 5 | NO SCALE | D-501

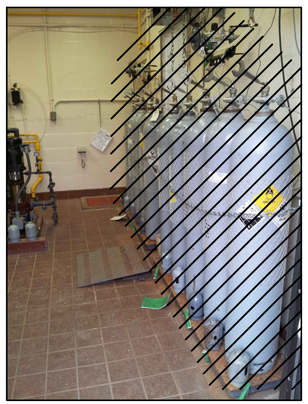

CHLORINE CYLINDERS

PHOTO 6 | NO SCALE | D-501

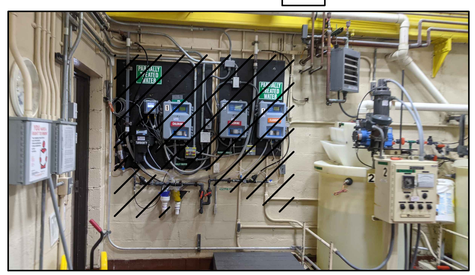

SAMPLE ANALYZER SYSTEMS

PHOTO 7 | NO SCALE | D-501

1/4"=1'-0" 1 0 1 2 3 7'

REV	ISSUED FOR	DATE	BY

PROJECT ENGINEER:	R. FROST
DESIGNED BY:	R. FROST
DRAWN BY:	B. CASULL
CHECKED BY:	E. FELDMAN

IF THIS BAR DOES NOT MEASURE 1" THEN DRAWING IS NOT TO FULL SCALE 0 1/2" 1"

BID SET

STATE OF NEW YORK · EDWARD J. McCARTHY FELDMAN · 085018 · LICENSED PROFESSIONAL ENGINEER

Hazen

HAZEN AND SAWYER
498 SEVENTH AVENUE, 11th FLOOR
NEW YORK, NEW YORK 10018

WESTCHESTER JOINT WATER WORKS
MAMARONECK, NY

RYE LAKE WATER FILTRATION PLANT
HARRISON, NY

EXISTING RYE LAKE CHEMICAL BUILDING
DEMOLITION PLAN EL 358.50

DATE:	FEB 2025
HAZEN NO.:	90388-000
CONTRACT NO.:	A1364-A
DRAWING NUMBER:	D-501

File: C:\USERS\BCASULL\DC\ACCDOCS\HAZEN AND SAWYER\90388-000_RYE_LAKE_FILTRATION\PROJECT FILES\PROJECTWISEMECHANICAL\D-501 Saved by BCASULL Save date: 2/6/2025 5:31 PM
PLOT DATE: 2/6/2025 5:32 PM BY: BCASULL

GENERAL NOTES:

1. SITE INFORMATION TAKEN FROM SITE SURVEY CONDUCTED BY GEORGE J. MOTTARELLA, PE, LS, PC, DATED 7-21-2021.

2. HORIZONTAL CONTROL IS REFERENCED TO THE NEW YORK STATE PLANE COORDINATE SYSTEM, EAST ZONE, BASED ON THE NORTH AMERICAN DATUM OF 1983 (NAD 83). VERTICAL CONTROL IS REFERENCED TO THE NORTH AMERICAN VERTICAL DATUM OF 1988 (NAVD 88).

3. CONTRACTOR SHALL VERIFY FIELD CONDITIONS BEFORE COMMENCEMENT OF ANY CONSTRUCTION ACTIVITIES. CONTRACTOR SHALL VERIFY EXISTING ELEVATIONS AND DIMENSIONS WHERE NEW WORK WILL MATCH EXISTING. DISCREPANCIES SHALL BE BROUGHT TO THE ATTENTION OF THE ENGINEER FOR RESOLUTION PRIOR TO THE COMMENCEMENT OF WORK.

4. CONTRACTOR SHALL OBTAIN ALL THE NECESSARY PERMITS FROM THE APPROPRIATE AUTHORITIES, DEPARTMENTS, AND/OR AGENCIES HAVING JURISDICTION PRIOR TO COMMENCING WORK.

5. CONTRACTOR SHALL TAKE CARE TO AVOID DAMAGE TO EXISTING PAVEMENT, TREES, VEGETATION, STRUCTURES, AND UTILITIES NOT INDICATED TO BE DEMOLISHED OR REMOVED. ANY DAMAGE TO EXISTING PAVEMENT, TREES, VEGETATION, STRUCTURES, AND UTILITIES NOT INDICATED TO BE DEMOLISHED OR REMOVED SHALL BE REPAIRED AT THE CONTRACTOR'S EXPENSE.

6. UTILITIES HAVE BEEN PLOTTED FROM AVAILABLE GIS INFORMATION, RECORD DRAWINGS, AND SITE SURVEY. IT IS THE CONTRACTOR'S RESPONSIBILITY TO VERIFY THEIR EXACT LOCATION AND TO AVOID DAMAGE TO THEM. THE CONTRACTOR SHALL CONTACT DIG SAFELY NEW YORK AT PHONE NUMBER 811 OR 1-800-962-7962 TO REQUEST UNDERGROUND UTILITY LOCATION MARK-OUT AT LEAST TWO (2) WORKING DAYS BUT NO MORE THAN TEN (10) WORKING DAYS PRIOR TO BEGINNING EXCAVATION, INCLUDING SOIL DRILLING. THE CONTRACTOR SHALL ALSO CONTACT AND REQUEST UTILITY LOCATION MARK-OUT FROM BURIED UTILITY OWNERS WITH UTILITIES ON THE PROJECT SITE THAT ARE NOT PARTICIPANTS OF DIG SAFELY NEW YORK.

7. WHERE PROPOSED WORK IS IN THE VICINITY OF UTILITY POLES, SUCH THAT SUPPORT OF THE POLE(S) WILL BE REQUIRED, THE CONTRACTOR SHALL BE RESPONSIBLE FOR NOTIFYING THE UTILITY OF THE WORK. IT WILL BE THE RESPONSIBILITY OF THE CONTRACTOR TO COORDINATE WITH THE UTILITY FOR SUPPORT OF THE POLE.

8. WHERE OVERHEAD POWER LINES ARE PRESENT, CONTRACTOR MUST CONTACT THE UTILITY PRIOR TO CONSTRUCTION ACTIVITIES TO DETERMINE THE MINIMUM REQUIRED EQUIPMENT CLEARANCE (MEC) DISTANCE BASED UPON LINE STRENGTH.

9. DURING STRUCTURAL EXCAVATION AND PLACEMENT OF UTILITIES THE CONTRACTOR SHALL COMPLY WITH ALL APPLICABLE SAFETY REGULATIONS, INCLUDING BUT NOT LIMITED TO 29 CFR 1926 SUBPART P EXCAVATIONS AND NYS CR 753 DIG SAFELY NY REGULATIONS, AND SHALL SUBMIT TO THE ENGINEER FOR APPROVAL SHEET PILING, SHORING AND/OR BRACING DESIGNS, PREPARED BY A PROFESSIONAL ENGINEER REGISTERED IN THE STATE OF NEW YORK, AS MAY BE NECESSARY TO COMPLY WITH THESE REGULATIONS.

10. GROUNDWATER FROM ALL DEWATERING OPERATIONS SHALL BE DISCHARGED THROUGH AN APPROVED SEDIMENT FILTERING DEVICE TO AN ENVIRONMENTALLY ACCEPTABLE LOCATION IN ACCORDANCE WITH THE CONTRACT DOCUMENTS, OR AS DIRECTED BY THE ENGINEER.

11. ALL TEMPORARY FACILITIES ARE SUBJECT TO THE SAME HEALTH AND SAFETY REQUIREMENTS AS PERMANENT FACILITIES, AS SPECIFIED IN THE CONTRACT DOCUMENTS AND HEALTH SAFETY PLAN (HASP).

12. THE CONTRACTOR SHALL REMOVE AND DISPOSE OF ALL DEBRIS GENERATED DURING THE PROJECT OFF SITE AT A PROPERLY PERMITTED DISPOSAL FACILITY.

13. CONTRACTOR SHALL MAKE EVERY EFFORT TO SAVE AND MAINTAIN ALL PROPERTY IRONS, MONUMENTS, OTHER PERMANENT POINTS AND LINES OF REFERENCE AND CONSTRUCTION STAKES. A STATE OF NEW YORK REGISTERED LAND SURVEYOR AT THE CONTRACTOR'S EXPENSE SHALL REPLACE PROPERTY IRONS, MONUMENTS, AND OTHER PERMANENT POINTS OF REFERENCE DESTROYED BY THE CONTRACTOR.

14. CONTRACTOR IS REQUIRED TO UTILIZE HAND DIGGING OR HYDROEXCAVATION TO A DEPTH OF 4 FEET IN AREAS WHERE UNDERGROUND UTILITIES ARE PRESENT.

ABBREVIATIONS

ACF	ANNUAL CHANCE FLOOD	FP	FIRE PROTECTION	OF	OVERFLOW	SAN	SANITARY DRAIN
BFV	BUTTERFLY VALVE	FUD	FOUNDATION UNDERDRAIN	OHE	OVERHEAD ELECTRIC	SD	STORM DRAIN
℄	CENTER LINE	G	GAS	₱	PROPERTY LINE	SHWT	SEASONALLY HIGH WATER TABLE
CMP	CORRUGATED METAL PIPE	GD	GALLERY DRAIN	PP	POWER POLE	TP	TEST PIT
DIP	DUCTILE IRON PIPE	GV	GATE VALVE	PPE	POLYPROPYLENE	UGE	UNDERGROUND ELECTRIC
EOP	EDGE OF PAVEMENT	LF	LINEAR FEET	PVC	POLYVINYL CHLORIDE	W	WATER
FDC	FIRE DEPARTMENT CONNECTION	LOC	LIMITS OF CONSTRUCTION	PW	POTABLE WATER	WCA	WESTCHESTER COUNTY AIRPORT
FM	FORCE MAIN	LP	LIGHT POLE	RCP	REINFORCED CONCRETE PIPE	WWR	WASHWATER RECYLE
FOC	FIBER OPTIC CABLE	MH	MANHOLE	RECM	ROLLED EROSION CONTROL MATTING	WWW	WASTE WASHWATER

LEGEND

SYMBOLS

- TP–1 — TEST BORING LOCATION
- B–3 — SOIL BORING LOCATION
- EXISTING FIRE HYDRANT
- YARD VALVE
- P — SUMP PUMP
- PST — PORTABLE SEDIMENT TANK
- INLET PROTECTION

NEW	DEMO	EXISTING	
			BUILDING/STRUCTURE
			BITUMINOUS PAVEMENT
			CONCRETE CURB AND GUTTER
			CONCRETE PAD/PAVING
			CONCRETE SIDEWALK
x		x	CHAIN LINK FENCE LINE
			ORNAMENTAL FENCE LINE
			AIRPORT FENCE LINE

NEW	EXISTING	
300	300	CONTOUR
×302.00	302.00 ×	SPOT ELEVATION
		PROPERTY LINE
OHE	OHE	OVERHEAD ELECTRIC
W	W	WATER PIPING
		ELECTRIC DUCTBANK
	UGT	UNDERGROUND COMMUNICATION
	UGE	UNDERGROUND ELECTRIC
GAS		GAS LINE
SD		STORM LINE

NEW	DEMO	EXISTING	
			APPROXIMATE WOODLINE
			YARD PIPING
			MANHOLE
			YARD INLET
			FLARED END SECTION
			CURB INLET
			STORM DRAIN LINE

- EXISTING DITCH LINE
- EXISTING WETLAND AREA
- WETLAND OR DITCH BUFFER
- STABILIZED OUTLET FOR SILT FENCE
- YARD INLET PROTECTION
- GRAVEL CONSTRUCTION ENTRANCE
- SF — SILT FENCE
- TPF — TREE PROTECTION FENCE
- LOD — LIMITS OF DISTURBANCE

WARNING
IT IS A VIOLATION OF SECTION 7209.2 OF THE NEW YORK STATE EDUCATION LAW FOR ANY PERSON, UNLESS ACTING UNDER THE DIRECTION OF A LICENSED PROFESSIONAL ENGINEER, TO ALTER IN ANY WAY PLANS, SPECIFICATIONS, PLATS OR REPORTS TO WHICH THE SEAL OF A PROFESSIONAL ENGINEER HAS BEEN APPLIED. IF AN ITEM BEARING THE SEAL OF A PROFESSIONAL ENGINEER IS ALTERED, THE ALTERING ENGINEER SHALL AFFIX TO THE ITEM HIS SEAL AND THE NOTATION "ALTERED BY" FOLLOWED BY HIS SIGNATURE, THE DATE, AND A SPECIFIC DESCRIPTION OF THE ALTERATION.

REV	ISSUED FOR	DATE	BY

PROJECT ENGINEER: R. FROST
DESIGNED BY: J. TANNER
DRAWN BY: J. TANNER
CHECKED BY: D. SHEERAN
IF THIS BAR DOES NOT MEASURE 1" THEN DRAWING IS NOT TO FULL SCALE 0 1/2" 1"

BID SET

STATE OF NEW YORK — DENISE JAMES SHEERAN — 088955 — LICENSED PROFESSIONAL ENGINEER

Hazen
HAZEN AND SAWYER
498 SEVENTH AVENUE, 11th FLOOR
NEW YORK, NEW YORK 10018

WESTCHESTER JOINT WATER WORKS
MAMARONECK, NY

RYE LAKE WATER FILTRATION PLANT
HARRISON, NY

CIVIL
GENERAL NOTES, LEGEND AND ABBREVIATIONS

DATE: FEB 2025
HAZEN NO.: 90388-000
CONTRACT NO.: A1364-A
DRAWING NUMBER: C-001

File: C:\USERS\JTANNER\DOCAOCDOCS\HAZEN AND SAWYER\90388-000_RYE_LAKE_FILTRATION\PROJECT FILES\PROJECTWISE\CIVIL\C-001 Saved by JTANNER Save date: 2/6/2025 2:09 PM
PLOT DATE: 3/26/2025 6:33 PM BY: JTANNER

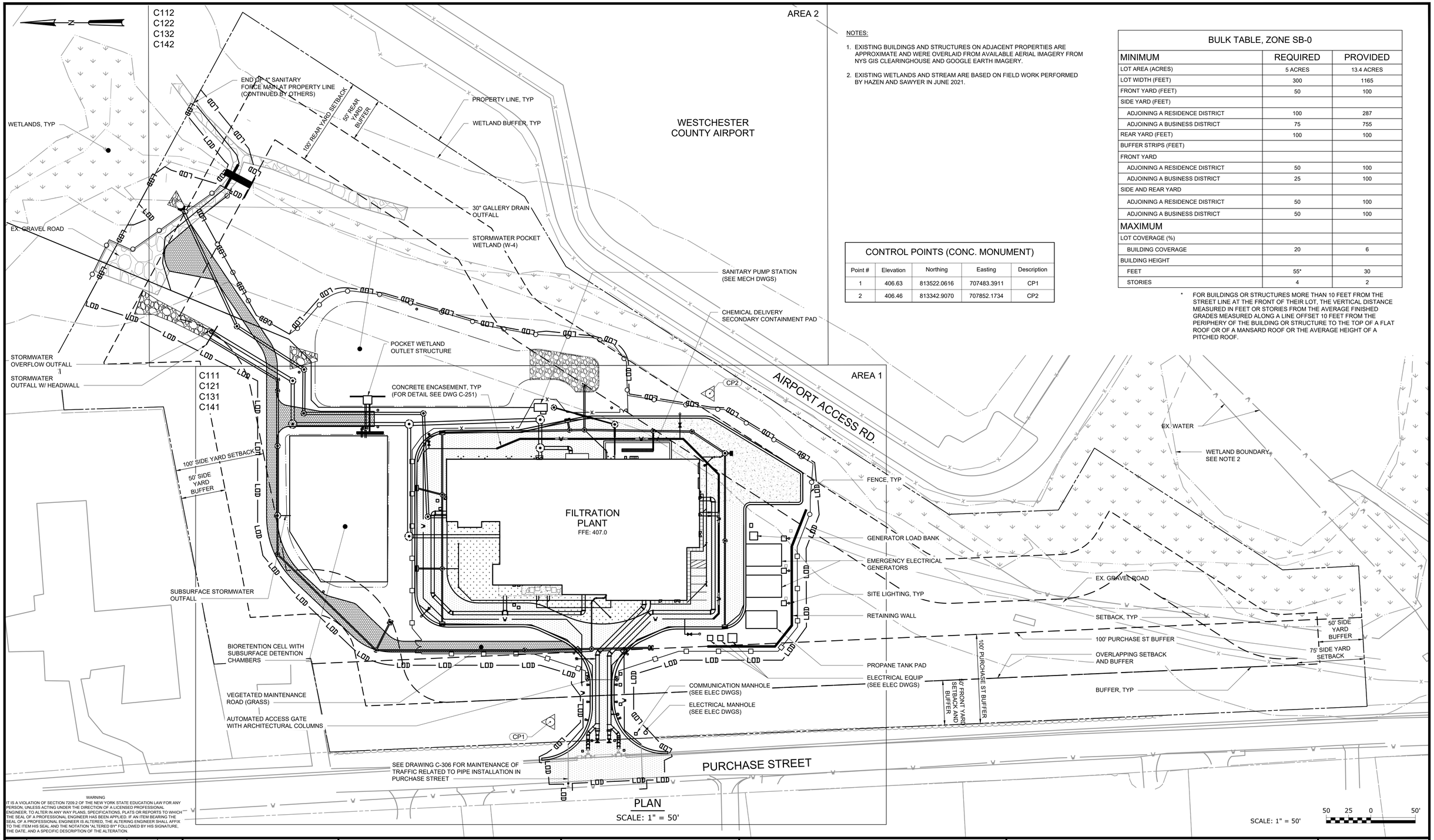

PLAN
SCALE: 1" = 50'

SCALE: 1" = 50'

50 25 0 50'

NOTES:

1. EXISTING BUILDINGS AND STRUCTURES ON ADJACENT PROPERTIES ARE APPROXIMATE AND WERE OVERLAID FROM AVAILABLE AERIAL IMAGERY FROM NYS GIS CLEARINGHOUSE AND GOOGLE EARTH IMAGERY.
2. EXISTING WETLANDS AND STREAM ARE BASED ON FIELD WORK PERFORMED BY HAZEN AND SAWYER IN JUNE 2021.

CONTROL POINTS (CONC. MONUMENT)

Point #	Elevation	Northing	Easting	Description
1	406.63	813522.0616	707483.3911	CP1
2	406.46	813342.9070	707852.1734	CP2

BULK TABLE, ZONE SB-0

MINIMUM	REQUIRED	PROVIDED
LOT AREA (ACRES)	5 ACRES	13.4 ACRES
LOT WIDTH (FEET)	300	1165
FRONT YARD (FEET)	50	100
SIDE YARD (FEET)		
ADJOINING A RESIDENCE DISTRICT	100	287
ADJOINING A BUSINESS DISTRICT	75	755
REAR YARD (FEET)	100	100
BUFFER STRIPS (FEET)		
FRONT YARD		
ADJOINING A RESIDENCE DISTRICT	50	100
ADJOINING A BUSINESS DISTRICT	25	100
SIDE AND REAR YARD		
ADJOINING A RESIDENCE DISTRICT	50	100
ADJOINING A BUSINESS DISTRICT	50	100
MAXIMUM		
LOT COVERAGE (%)		
BUILDING COVERAGE	20	6
BUILDING HEIGHT		
FEET	55*	30
STORIES	4	2

* FOR BUILDINGS OR STRUCTURES MORE THAN 10 FEET FROM THE STREET LINE AT THE FRONT OF THEIR LOT, THE VERTICAL DISTANCE MEASURED IN FEET OR STORIES FROM THE AVERAGE FINISHED GRADES MEASURED ALONG A LINE OFFSET 10 FEET FROM THE PERIPHERY OF THE BUILDING OR STRUCTURE TO THE TOP OF A FLAT ROOF OR OF A MANSARD ROOF OR THE AVERAGE HEIGHT OF A PITCHED ROOF.

WARNING
IT IS A VIOLATION OF SECTION 7209.2 OF THE NEW YORK STATE EDUCATION LAW FOR ANY PERSON, UNLESS ACTING UNDER THE DIRECTION OF A LICENSED PROFESSIONAL ENGINEER, TO ALTER IN ANY WAY PLANS, SPECIFICATIONS, PLATS OR REPORTS TO WHICH THE SEAL OF A PROFESSIONAL ENGINEER HAS BEEN APPLIED. IF AN ITEM BEARING THE SEAL OF A PROFESSIONAL ENGINEER IS ALTERED, THE ALTERING ENGINEER SHALL AFFIX TO THE ITEM HIS SEAL AND THE NOTATION "ALTERED BY" FOLLOWED BY HIS SIGNATURE, THE DATE, AND A SPECIFIC DESCRIPTION OF THE ALTERATION.

REV	ISSUED FOR	DATE	BY

PROJECT ENGINEER: R. FROST
DESIGNED BY: J. TANNER
DRAWN BY: J. TANNER
CHECKED BY: D. SHEERAN
IF THIS BAR DOES NOT MEASURE 1" THEN DRAWING IS NOT TO FULL SCALE 0 1/2" 1"

BID SET

STATE OF NEW YORK
DANIEL JAMES SHEERAN
088955
LICENSED PROFESSIONAL ENGINEER

Hazen
HAZEN AND SAWYER
498 SEVENTH AVENUE, 11th FLOOR
NEW YORK, NEW YORK 10018

WESTCHESTER JOINT WATER WORKS
MAMARONECK, NY

RYE LAKE WATER FILTRATION PLANT
HARRISON, NY

CIVIL
OVERALL SITE PLAN

DATE: FEB 2025
HAZEN NO.: 90388-000
CONTRACT NO.: A1364-A
DRAWING NUMBER: C-101

File: C:\USERS\JTANNER\DCACCDOCS\HAZEN AND SAWYER\90388-000_RYE_LAKE_FILTRATION\PROJECT FILES\PROJECTWISE\CIVIL\C-101 Saved by JTANNER Save date: 3/19/2025 2:27 PM
PLOT DATE: 3/26/2025 6:33 PM BY: JTANNER

SEE MATCHLINE DWG #####

SEE MATCHLINE - THIS DWG

SEE MATCHLINE - THIS DWG

EXISTING CONDITION AND DEMOLITION NOTES:

1. TREES REMOVED UNDER SEPARATE CONTRACT. CONTRACTOR SHALL REMOVE REMAINING STUMPS AND ROOTS. SEE SPECIFICATION SECTION 31 10 00 - CLEARING, GRUBBING, AND SITE PREPARATION.
2. GROUND COVER WITHIN LIMIT OF DISTURBANCE IS APPROXIMATELY SIX INCHES OF WOODCHIPS. CONTRACTOR SHALL REMOVE WOOD AND DISPOSE OF THEM OFFSITE AS REQUIRED TO COMPLETE THEIR CONSTRUCTION ACTIVITIES.
3. CONTRACTOR TO VERIFY LOCATION OF ALL UTILITIES PRIOR TO START OF WORK.
4. BASE MAPPING INFORMATION BASED ON SITE SURVEY PERFORMED BY GEORGE J. MOTARELLA, PE, PS, PC DATED 7-21-2021
5. ALL TREES ROOTED WITHIN THE LIMITS OF DISTURBANCE ARE TO BE CLEARED AND GRUBBED.
6. ALL DEMOLITION WORK MUST BE PERFORMED IN ACCORDANCE WITH 29 CFR 1926 SUBPART T DEMOLITION AND 1926.1153 RESPIRABLE CRYSTALLINE SILICA.
7. SOIL BORINGS PERFORMED BY GZA MAY AND JUNE 2021.
8. TEST PITS 1-6 PERFORMED IN AUGUST 2021 AND TEST PITS 7-13 PERFORMED IN NOVEMBER 2021 BY GZA.
9. CONTRACTOR SHALL USE AREA OF TREE PLANTING AND VEGETATIVE INFILL FOR THE WORK SHOWN ON THE LANDSCAPE DWGS ONLY. HAND DIGGING SHALL BE PREFORMED WITHIN THE LIMITS OF THE TREE PROTECTION ZONE. USE FOR ANY OTHER CONSTRUCTION ACTIVITIES IS PROHIBITED.
10. EXISTING AIRPORT FENCE SHALL NOT BE REMOVED UNTIL RELOCATED FENCE HAS BEEN INSTALLED. SEE DWGS C-111, C-141, AND C-142.

AREA OF TREE PLANTING AND VEGETATIVE INFILL ONLY SEE LANDSCAPE DWGS

SCALE: 1" = 30'

30 15 0 30'

WARNING
IT IS A VIOLATION OF SECTION 7209.2 OF THE NEW YORK STATE EDUCATION LAW FOR ANY PERSON, UNLESS ACTING UNDER THE DIRECTION OF A LICENSED PROFESSIONAL ENGINEER, TO ALTER IN ANY WAY PLANS, SPECIFICATIONS, PLATS OR REPORTS TO WHICH THE SEAL OF A PROFESSIONAL ENGINEER HAS BEEN APPLIED. IF AN ITEM BEARING THE SEAL OF A PROFESSIONAL ENGINEER IS ALTERED, THE ALTERING ENGINEER SHALL AFFIX TO THE ITEM HIS SEAL AND THE NOTATION "ALTERED BY" FOLLOWED BY HIS SIGNATURE, THE DATE, AND A SPECIFIC DESCRIPTION OF THE ALTERATION.

REV	ISSUED FOR	DATE	BY

PROJECT ENGINEER:	R. FROST
DESIGNED BY:	J. TANNER
DRAWN BY:	J. TANNER
CHECKED BY:	D. SHEERAN

IF THIS BAR DOES NOT MEASURE 1" THEN DRAWING IS NOT TO FULL SCALE 0 1/2" 1"

BID SET

STATE OF NEW YORK — DANIEL JAMES SHEERAN — 088955 — LICENSED PROFESSIONAL ENGINEER

Hazen

HAZEN AND SAWYER
498 SEVENTH AVENUE, 11th FLOOR
NEW YORK, NEW YORK 10018

WESTCHESTER JOINT WATER WORKS
MAMARONECK, NY

RYE LAKE WATER FILTRATION PLANT
HARRISON, NY

CIVIL
EXISTING CONDITIONS AND DEMOLITION PLAN - AREA 1

DATE:	FEB 2025
HAZEN NO.:	90388-000
CONTRACT NO.:	A1364-A
DRAWING NUMBER:	C-102

File: C:\USERS\JTANNER\DOCUMENTS\ACCDOCS\HAZEN AND SAWYER\90388-000_RYE_LAKE_FILTRATION\PROJECT FILES\PROJECTWISE\CIVIL\C-102 Saved by JTANNER Save date: 3/27/2025 10:15 AM
PLOT DATE: 3/27/2025 10:16 AM BY: JTANNER

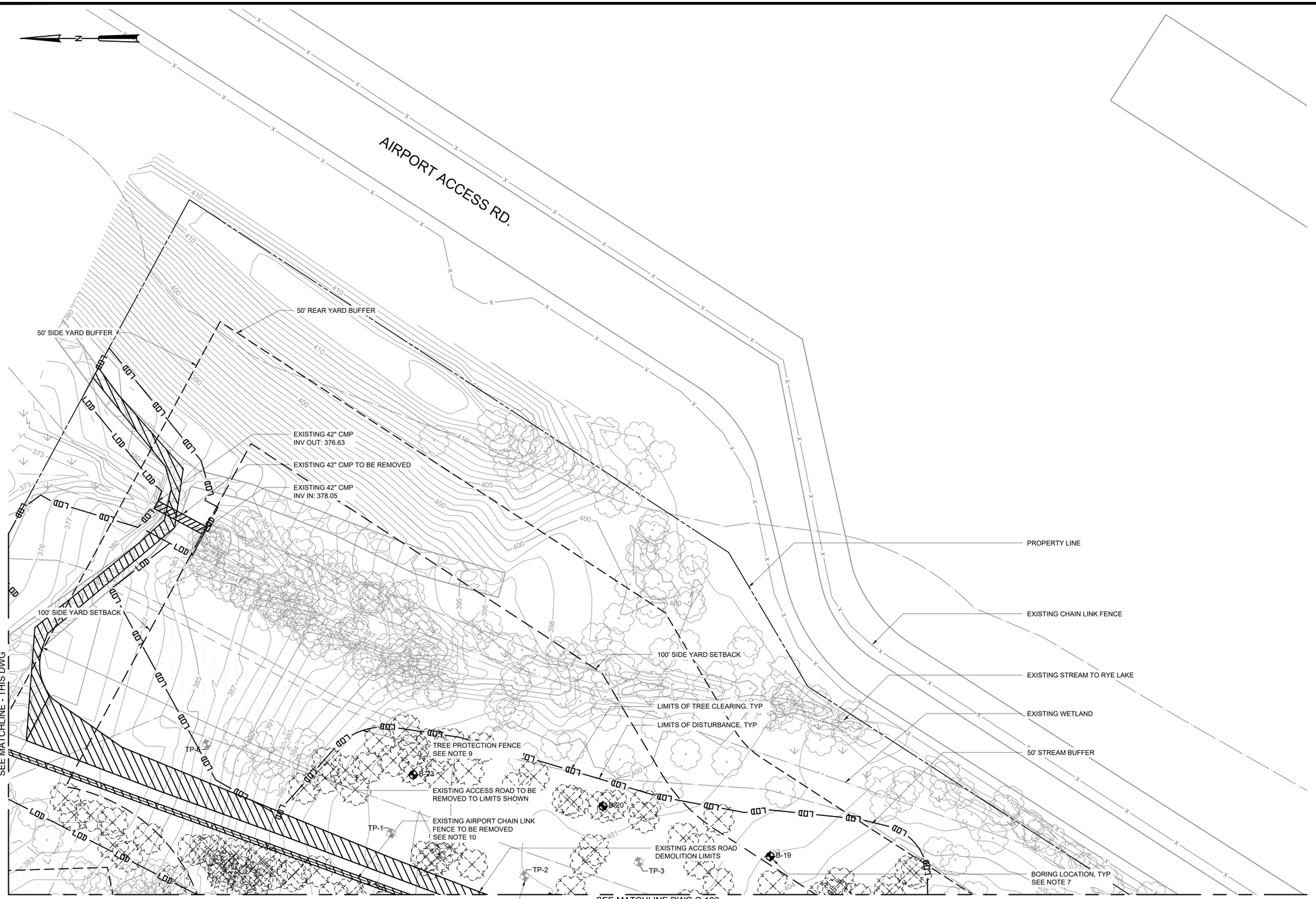

EXISTING CONDITION AND DEMOLITION NOTES:

1. TREES REMOVED UNDER SEPARATE CONTRACT. CONTRACTOR SHALL REMOVE REMAINING STUMPS AND ROOTS. SEE SPECIFICATION SECTION 31 10 00 - CLEARING, GRUBBING, AND SITE PREPARATION.
2. GROUND COVER WITHIN LIMIT OF DISTURBANCE IS APPROXIMATELY SIX INCHES OF WOODCHIPS. CONTRACTOR SHALL REMOVE WOOD AND DISPOSE OF THEM OFFSITE AS REQUIRED TO COMPLETE THEIR CONSTRUCTION ACTIVITIES.
3. CONTRACTOR TO VERIFY LOCATION OF ALL UTILITIES PRIOR TO START OF WORK.
4. BASE MAPPING INFORMATION BASED ON SITE SURVEY PERFORMED BY GEORGE J. MOTARELLA, PE, PS, PC DATED 7-21-2021
5. ALL TREES ROOTED WITHIN THE LIMITS OF DISTURBANCE ARE TO BE CLEARED AND GRUBBED.
6. ALL DEMOLITION WORK MUST BE PERFORMED IN ACCORDANCE WITH 29 CFR 1926 SUBPART T DEMOLITION AND 1926.1153 RESPIRABLE CRYSTALLINE SILICA.
7. SOIL BORINGS PERFORMED BY GZA MAY AND JUNE 2021.
8. TEST PITS 1-6 PERFORMED IN AUGUST 2021 AND TEST PITS 7-13 PERFORMED IN NOVEMBER 2021 BY GZA.
9. CONTRACTOR SHALL USE AREA OF TREE PLANTING AND VEGETATIVE INFILL FOR THE WORK SHOWN ON THE LANDSCAPE DWGS ONLY. HAND DIGGING SHALL BE PREFORMED WITHIN THE LIMITS OF THE TREE PROTECTION ZONE. USE FOR ANY OTHER CONSTRUCTION ACTIVITIES IS PROHIBITED.
10. EXISTING AIRPORT FENCE SHALL NOT BE REMOVED UNTIL RELOCATED FENCE HAS BEEN INSTALLED. SEE DWGS C-111, C-141, AND C-142.

AREA OF TREE PLANTING AND VEGETATIVE INFILL ONLY
SEE LANDSCAPE DWGS

WARNING
IT IS A VIOLATION OF SECTION 7209.2 OF THE NEW YORK STATE EDUCATION LAW FOR ANY PERSON, UNLESS ACTING UNDER THE DIRECTION OF A LICENSED PROFESSIONAL ENGINEER, TO ALTER IN ANY WAY PLANS, SPECIFICATIONS, PLATS OR REPORTS TO WHICH THE SEAL OF A PROFESSIONAL ENGINEER HAS BEEN APPLIED. IF AN ITEM BEARING THE SEAL OF A PROFESSIONAL ENGINEER IS ALTERED, THE ALTERING ENGINEER SHALL AFFIX TO THE ITEM HIS SEAL AND THE NOTATION "ALTERED BY" FOLLOWED BY HIS SIGNATURE, THE DATE, AND A SPECIFIC DESCRIPTION OF THE ALTERATION.

REV	ISSUED FOR	DATE	BY

PROJECT ENGINEER:	R. FROST
DESIGNED BY:	J. TANNER
DRAWN BY:	J. TANNER
CHECKED BY:	D. SHEERAN

IF THIS BAR DOES NOT MEASURE 1" THEN DRAWING IS NOT TO FULL SCALE 0 1/2" 1"

BID SET

STATE OF NEW YORK DANIEL JAMES SHEERAN 088955 LICENSED PROFESSIONAL ENGINEER

Hazen

HAZEN AND SAWYER
498 SEVENTH AVENUE, 11th FLOOR
NEW YORK, NEW YORK 10018

WESTCHESTER JOINT WATER WORKS
MAMARONECK, NY

RYE LAKE WATER FILTRATION PLANT
HARRISON, NY

CIVIL
EXISTING CONDITIONS AND DEMOLITION PLAN - AREA 2

DATE:	FEB 2025
HAZEN NO.:	90388-000
CONTRACT NO.:	A1364-A
DRAWING NUMBER:	C-103

File: C:\USERS\JTANNER\DOCUMENTS\ACCDOCS\HAZEN AND SAWYER\90388-000_RYE_LAKE_FILTRATION\PROJECT FILES\PROJECTWISE\CIVIL\C-103 Saved by JTANNER Save date: 2/6/2025 3:51 PM
PLOT DATE: 2/26/2025 6:34 PM BY: JTANNER

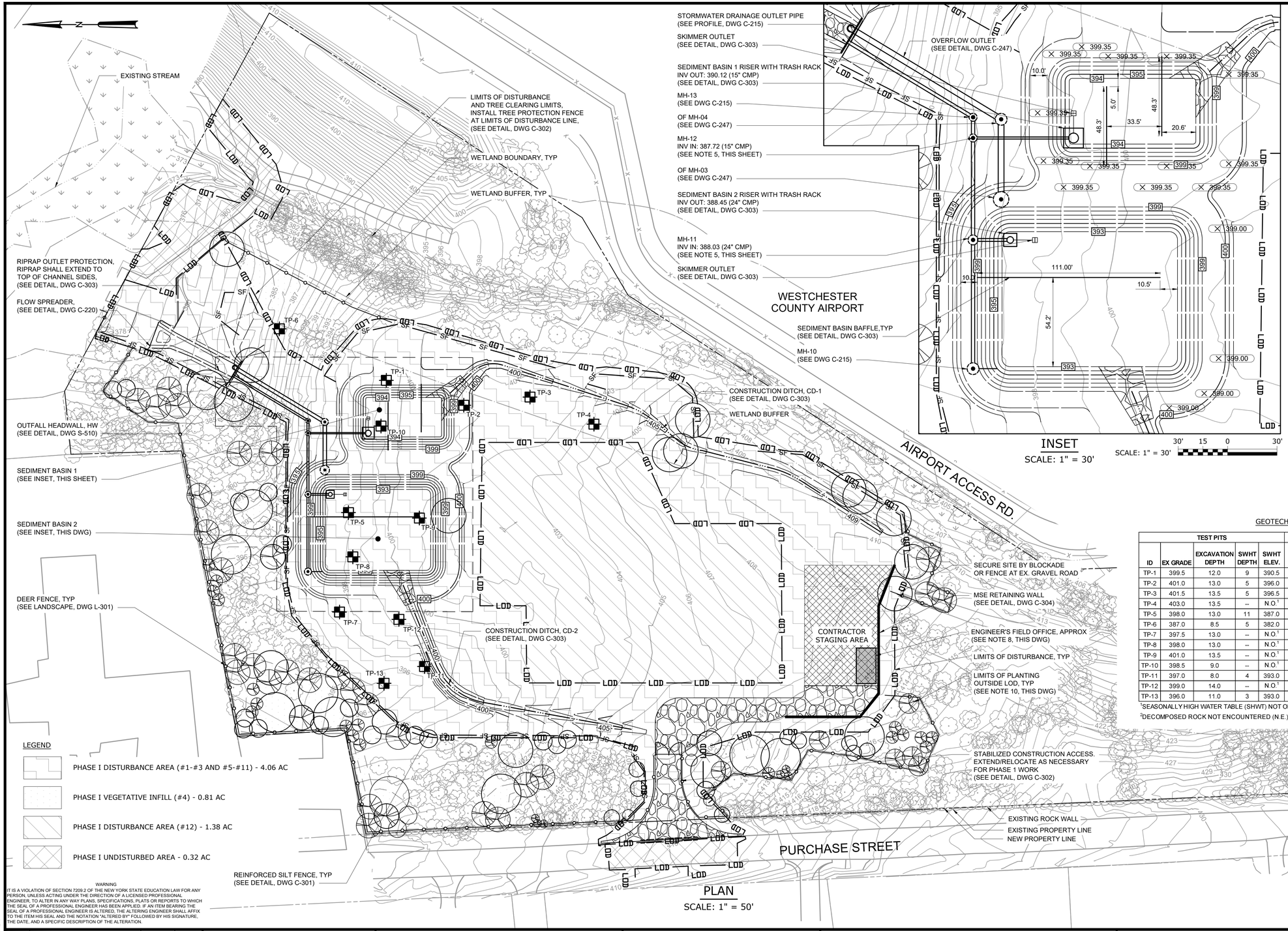

INSET
SCALE: 1" = 30'

PLAN
SCALE: 1" = 50'

SCALE: 1" = 30'

30' 15 0 30'

50' 25 0 50'

EROSION AND SEDIMENT CONTROL - PHASE I - SITE PREPARATION

1. CONTRACTOR SIGNS ONTO SWPPP.
2. CONTRACTOR TO NOTIFY NYC DEP OF CONSTRUCTION ACTIVITIES.
3. INSTALL SILT FENCE, TREE PROTECTION FENCE, AND STABILIZED CONSTRUCTION ACCESS.
4. INSTALL TREE PLANTING, VEGETATIVE INFILL, AND DEER FENCE.
5. INSTALL AIRPORT FENCE. DEMOLISH EXISTING AIRPORT FENCE.
6. CLEAR AND GRUB STAGING AREA AND AREAS FOR SEDIMENT BASINS.
7. INSTALL OUTFALL HEADWALL, FLOW SPREADER, AND RIPRAP OUTLET PROTECTION.
8. INSTALL STORM DRAIN AND OVERFLOW PIPING AND STRUCTURES AS FOLLOWS:
   - STORM BETWEEN HW AND MH-10
   - OVERFLOW BETWEEN HW AND OH MH-03
9. EXCAVATE AND INSTALL TEMPORARY SEDIMENT BASINS.
10. CONNECT SEDIMENT BASIN RISER STRUCTURES TO STORM DRAIN MANHOLES MH-11 AND MH-12.
11. INSTALL CONSTRUCTION DITCHES.
12. CONSTRUCT MSE RETAINING WALL.
13. PERFORM CLEARING AND GRUBBING FOR REMAINDER OF SITE.

NOTES

1. A PRE-CONSTRUCTION MEETING SHALL BE SCHEDULED WITH NYC DEP, THE ENGINEER, AND WJWW TWO WEEKS PRIOR TO COMMENCEMENT OF CONSTRUCTION ACTIVITIES. NYC DEP SHALL BE NOTIFIED 48 HOURS PRIOR TO COMMENCEMENT OF CONSTRUCTION ACTIVITIES.
2. SEE DRAWINGS C-301 - C-303 FOR EROSION CONTROL DETAILS.
3. CONTRACTOR SHALL NOT STORE EXCAVATED MATERIAL INSIDE THE WETLAND BUFFER.
4. CONSTRUCTION PHASING AS SHOWN IS SUGGESTED AND FOR THE PURPOSES OF EROSION AND SEDIMENT CONTROL. CONTRACTOR MAY PERFORM WORK IN ALTERNATIVE PHASES OR SEQUENCE PROVIDED CONTRACT RESTRICTIONS ARE FOLLOWED AND SEQUENCE IS APPROVED BY THE ENGINEER.
5. CONTRACTOR SHALL TEMPORARILY CONNECT SEDIMENT BASIN OUTLET PIPES TO STORM DRAIN MANHOLES, MH-11 AND MH-12. UPON COMPLETION OF STORMWATER POCKET WETLAND AND BIORETENTION CELLS, SEDIMENT BASIN OUTLET PIPE SHALL BE REMOVED AND PENETRATION IN MANHOLES SEALED.
6. TREES NOT SHOWN FOR CLARITY, REFERENCE CIVIL DWG C-102 - C-103 AND LANDSCAPE DWG L-101 - L-102.
7. ANY STOCKPILED MATERIALS SHALL BE WITHIN THE STAGING AREA DURING ALL PHASES OF CONSTRUCTION.
8. CONTRACTOR SHALL PROVIDE ENGINEER'S FIELD OFFICE IN ACCORDANCE WITH SPECIFICATION SECTION 01 52 00 - CONSTRUCTION FACILITIES.
9. CONTRACTOR SHALL PROVIDE BIRD DETERRENT SYSTEM FOR SEDIMENT BASIN. SEE DETAIL ON DWG C-221 AND SPECIFICATION SECTION 33 46 01.
10. IN-FILL PLANTING OUTSIDE THE LOD SHOULD BE CONDUCTED IN THE FIRST PLANTING SEASON DURING THE CONSTRUCTION PERIOD. SEE LAND DWGS.

GEOTECHNICAL TEST PIT AND BORING SUMMARY TABLE

TEST PITS					BORINGS				SEDIMENT BASINS			
ID	EX GRADE	EXCAVATION DEPTH	SWHT DEPTH	SWHT ELEV.	ID	EX GRADE	ROCK DEPTH	ROCK ELEV.	BASIN NO.	BASIN BOTTOM ELEV.	SHWT SEPARATION	ROCK SEPARATION
TP-1	399.5	12.0	9	390.5	B-23	399.0	N.E.[2]	N.E.[2]	1	394.0	3.5	N.E.[2]
TP-2	401.0	13.0	5	396.0	B-21	401.0	18.5	382.5	--	--	--	--
TP-3	401.5	13.5	5	396.5	B-20	401.0	N.E.[2]	N.E.[2]	--	--	--	--
TP-4	403.0	13.5	--	N.O.[1]	B-19	403.0	N.E.[2]	N.E.[2]	--	--	--	--
TP-5	398.0	13.0	11	387.0	B-26	397.0	18.5	378.5	2	393.00	6.0	14.5
TP-6	387.0	8.5	5	382.0	B-29	389.0	N.E.[2]	N.E.[2]	--	--	--	--
TP-7	397.5	13.0	--	N.O.[1]	B-24	399.0	N.E.[2]	N.E.[2]	--	--	--	--
TP-8	398.0	13.0	--	N.O.[1]	B-25	398.0	N.E.[2]	N.E.[2]	2	393.00	N.O.[1]	N.E.[2]
TP-9	401.0	13.5	--	N.O.[1]	B-1	401.0	23.5	377.5	2	393.00	N.O.[1]	15.5
TP-10	398.5	9.0	--	N.O.[1]	B-22	399.0	18.5	380.5	1	394.00	N.O.[1]	13.5
TP-11	397.0	8.0	4	393.0	B-2	398.5	23.5	375.0	--	--	--	--
TP-12	399.0	14.0	--	N.O.[1]	B-24	399.0	N.E.[2]	N.E.[2]	--	--	--	--
TP-13	396.0	11.0	3	393.0	B-2	398.5	23.5	374.5	--	--	--	--

[1]SEASONALLY HIGH WATER TABLE (SHWT) NOT OBSERVED (N.O.) PRIOR TO TEST PIT TERMINATION
[2]DECOMPOSED ROCK NOT ENCOUNTERED (N.E.) PRIOR TO TEST BORING TERMINATION AT 22' BELOW GRADE

LEGEND

- PHASE I DISTURBANCE AREA (#1-#3 AND #5-#11) - 4.06 AC
- PHASE I VEGETATIVE INFILL (#4) - 0.81 AC
- PHASE I DISTURBANCE AREA (#12) - 1.38 AC
- PHASE I UNDISTURBED AREA - 0.32 AC

LIMIT OF DISTURBANCE LEGEND

LINETYPE	DESCRIPTION	AREA (AC)
LOD	WFP LOD	5.76
	VEGETATIVE INFILL WITH DEER FENCE LOD	0.81
	OVERALL LOD	6.57

WARNING
IT IS A VIOLATION OF SECTION 7209.2 OF THE NEW YORK STATE EDUCATION LAW FOR ANY PERSON, UNLESS ACTING UNDER THE DIRECTION OF A LICENSED PROFESSIONAL ENGINEER, TO ALTER IN ANY WAY PLANS, SPECIFICATIONS, PLATS OR REPORTS TO WHICH THE SEAL OF A PROFESSIONAL ENGINEER HAS BEEN APPLIED. IF AN ITEM BEARING THE SEAL OF A PROFESSIONAL ENGINEER IS ALTERED, THE ALTERING ENGINEER SHALL AFFIX TO THE ITEM HIS SEAL AND THE NOTATION "ALTERED BY" FOLLOWED BY HIS SIGNATURE, THE DATE, AND A SPECIFIC DESCRIPTION OF THE ALTERATION.

REV	ISSUED FOR	DATE	BY

PROJECT ENGINEER:	R. FROST
DESIGNED BY:	J. TANNER
DRAWN BY:	J. TANNER
CHECKED BY:	D. SHEERAN

IF THIS BAR DOES NOT MEASURE 1" THEN DRAWING IS NOT TO FULL SCALE 0 1/2" 1"

BID SET

STATE OF NEW YORK DANIEL JAMES SHEERAN 088955 LICENSED PROFESSIONAL ENGINEER

Hazen

HAZEN AND SAWYER
498 SEVENTH AVENUE, 11th FLOOR
NEW YORK, NEW YORK 10018

WESTCHESTER JOINT WATER WORKS
MAMARONECK, NY

RYE LAKE WATER FILTRATION PLANT
HARRISON, NY

CIVIL
EROSION AND SEDIMENT CONTROL PHASING PLAN - PHASE I

DATE:	FEB 2025
HAZEN NO.:	90388-000
CONTRACT NO.:	A1364-A
DRAWING NUMBER:	C-111

File: C:\USERS\JTANNER\DCACCDOCS\HAZEN AND SAWYER\90388-000_RYE_LAKE_FILTRATION\PROJECT FILES\PROJECTWISE\CIVIL\C-111 Saved by JTANNER Save date: 3/19/2025 3:18 PM
PLOT DATE: 3/26/2025 6:34 PM BY: JTANNER

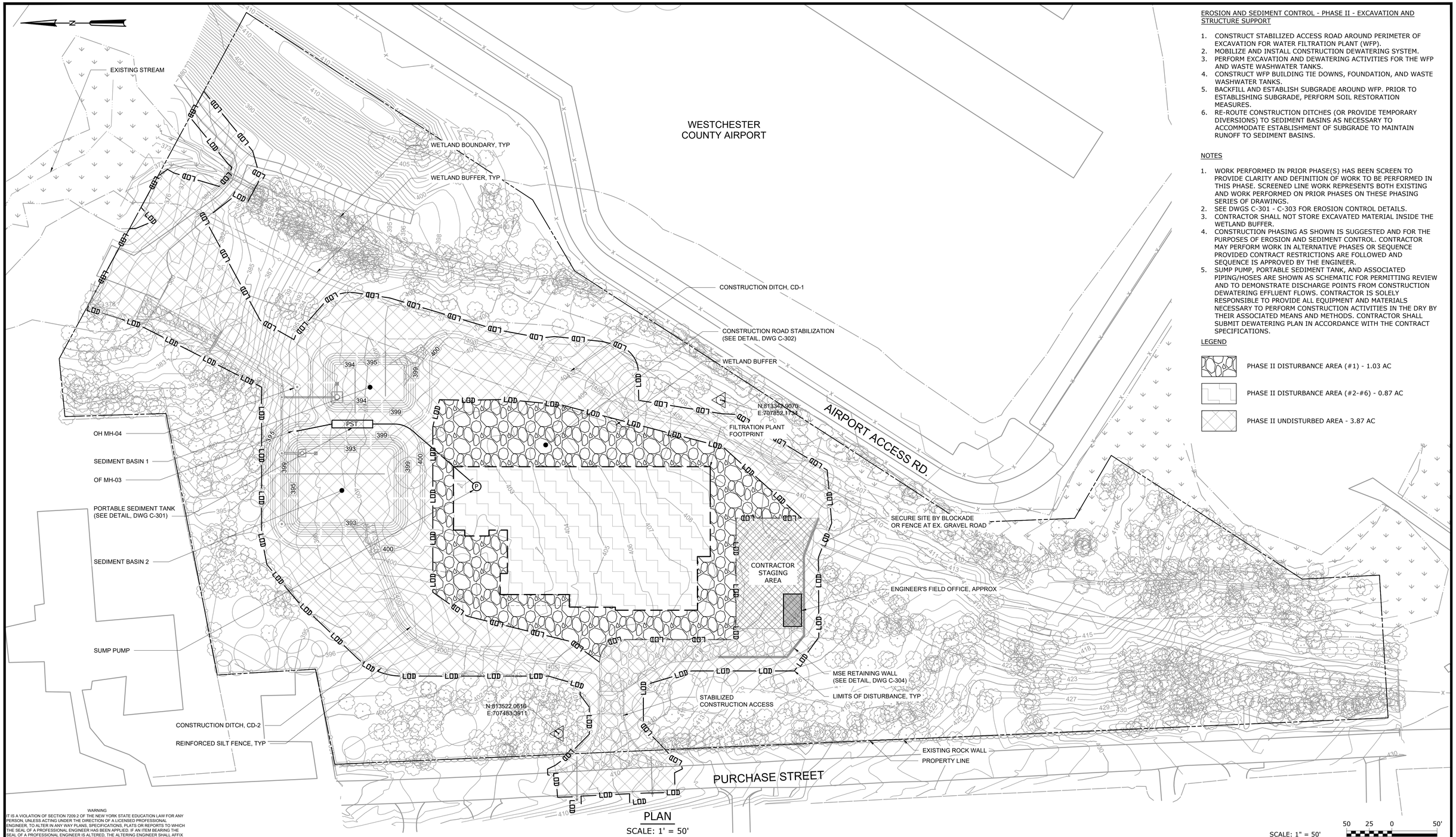

PLAN

SCALE: 1' = 50'

SCALE: 1" = 50'

50 25 0 50'

EROSION AND SEDIMENT CONTROL - PHASE II - EXCAVATION AND STRUCTURE SUPPORT

1. CONSTRUCT STABILIZED ACCESS ROAD AROUND PERIMETER OF EXCAVATION FOR WATER FILTRATION PLANT (WFP).
2. MOBILIZE AND INSTALL CONSTRUCTION DEWATERING SYSTEM.
3. PERFORM EXCAVATION AND DEWATERING ACTIVITIES FOR THE WFP AND WASTE WASHWATER TANKS.
4. CONSTRUCT WFP BUILDING TIE DOWNS, FOUNDATION, AND WASTE WASHWATER TANKS.
5. BACKFILL AND ESTABLISH SUBGRADE AROUND WFP. PRIOR TO ESTABLISHING SUBGRADE, PERFORM SOIL RESTORATION MEASURES.
6. RE-ROUTE CONSTRUCTION DITCHES (OR PROVIDE TEMPORARY DIVERSIONS) TO SEDIMENT BASINS AS NECESSARY TO ACCOMMODATE ESTABLISHMENT OF SUBGRADE TO MAINTAIN RUNOFF TO SEDIMENT BASINS.

NOTES

1. WORK PERFORMED IN PRIOR PHASE(S) HAS BEEN SCREEN TO PROVIDE CLARITY AND DEFINITION OF WORK TO BE PERFORMED IN THIS PHASE. SCREENED LINE WORK REPRESENTS BOTH EXISTING AND WORK PERFORMED ON PRIOR PHASES ON THESE PHASING SERIES OF DRAWINGS.
2. SEE DWGS C-301 - C-303 FOR EROSION CONTROL DETAILS.
3. CONTRACTOR SHALL NOT STORE EXCAVATED MATERIAL INSIDE THE WETLAND BUFFER.
4. CONSTRUCTION PHASING AS SHOWN IS SUGGESTED AND FOR THE PURPOSES OF EROSION AND SEDIMENT CONTROL. CONTRACTOR MAY PERFORM WORK IN ALTERNATIVE PHASES OR SEQUENCE PROVIDED CONTRACT RESTRICTIONS ARE FOLLOWED AND SEQUENCE IS APPROVED BY THE ENGINEER.
5. SUMP PUMP, PORTABLE SEDIMENT TANK, AND ASSOCIATED PIPING/HOSES ARE SHOWN AS SCHEMATIC FOR PERMITTING REVIEW AND TO DEMONSTRATE DISCHARGE POINTS FROM CONSTRUCTION DEWATERING EFFLUENT FLOWS. CONTRACTOR IS SOLELY RESPONSIBLE TO PROVIDE ALL EQUIPMENT AND MATERIALS NECESSARY TO PERFORM CONSTRUCTION ACTIVITIES IN THE DRY BY THEIR ASSOCIATED MEANS AND METHODS. CONTRACTOR SHALL SUBMIT DEWATERING PLAN IN ACCORDANCE WITH THE CONTRACT SPECIFICATIONS.

LEGEND

PHASE II DISTURBANCE AREA (#1) - 1.03 AC

PHASE II DISTURBANCE AREA (#2-#6) - 0.87 AC

PHASE II UNDISTURBED AREA - 3.87 AC

WARNING
IT IS A VIOLATION OF SECTION 7209.2 OF THE NEW YORK STATE EDUCATION LAW FOR ANY PERSON, UNLESS ACTING UNDER THE DIRECTION OF A LICENSED PROFESSIONAL ENGINEER, TO ALTER IN ANY WAY PLANS, SPECIFICATIONS, PLATS OR REPORTS TO WHICH THE SEAL OF A PROFESSIONAL ENGINEER HAS BEEN APPLIED. IF AN ITEM BEARING THE SEAL OF A PROFESSIONAL ENGINEER IS ALTERED, THE ALTERING ENGINEER SHALL AFFIX TO THE ITEM HIS SEAL AND THE NOTATION "ALTERED BY" FOLLOWED BY HIS SIGNATURE, THE DATE, AND A SPECIFIC DESCRIPTION OF THE ALTERATION.

REV	ISSUED FOR	DATE	BY

PROJECT ENGINEER:	R. FROST
DESIGNED BY:	J. TANNER
DRAWN BY:	J. TANNER
CHECKED BY:	D. SHEERAN

IF THIS BAR DOES NOT MEASURE 1" THEN DRAWING IS NOT TO FULL SCALE 0 1/2" 1"

BID SET

STATE OF NEW YORK DANIEL JAMES SHEERAN 088955 LICENSED PROFESSIONAL ENGINEER

Hazen
HAZEN AND SAWYER
498 SEVENTH AVENUE, 11th FLOOR
NEW YORK, NEW YORK 10018

WESTCHESTER JOINT WATER WORKS
MAMARONECK, NY

RYE LAKE WATER FILTRATION PLANT
HARRISON, NY

CIVIL
EROSION AND SEDIMENT CONTROL PHASING PLAN - PHASE II

DATE:	FEB 2025
HAZEN NO.:	90388-000
CONTRACT NO.:	A1364-A
DRAWING NUMBER:	C-112

File: C:\USERS\JTANNER\DOCACCDOCS\HAZEN AND SAWYER\90388-000_RYE_LAKE_FILTRATION\PROJECT FILES\PROJECTWISE\CIVIL\C-112 Saved by JTANNER Save date: 2/11/2025 1:08 PM
PLOT DATE: 3/27/2025 11:19 AM BY: JTANNER

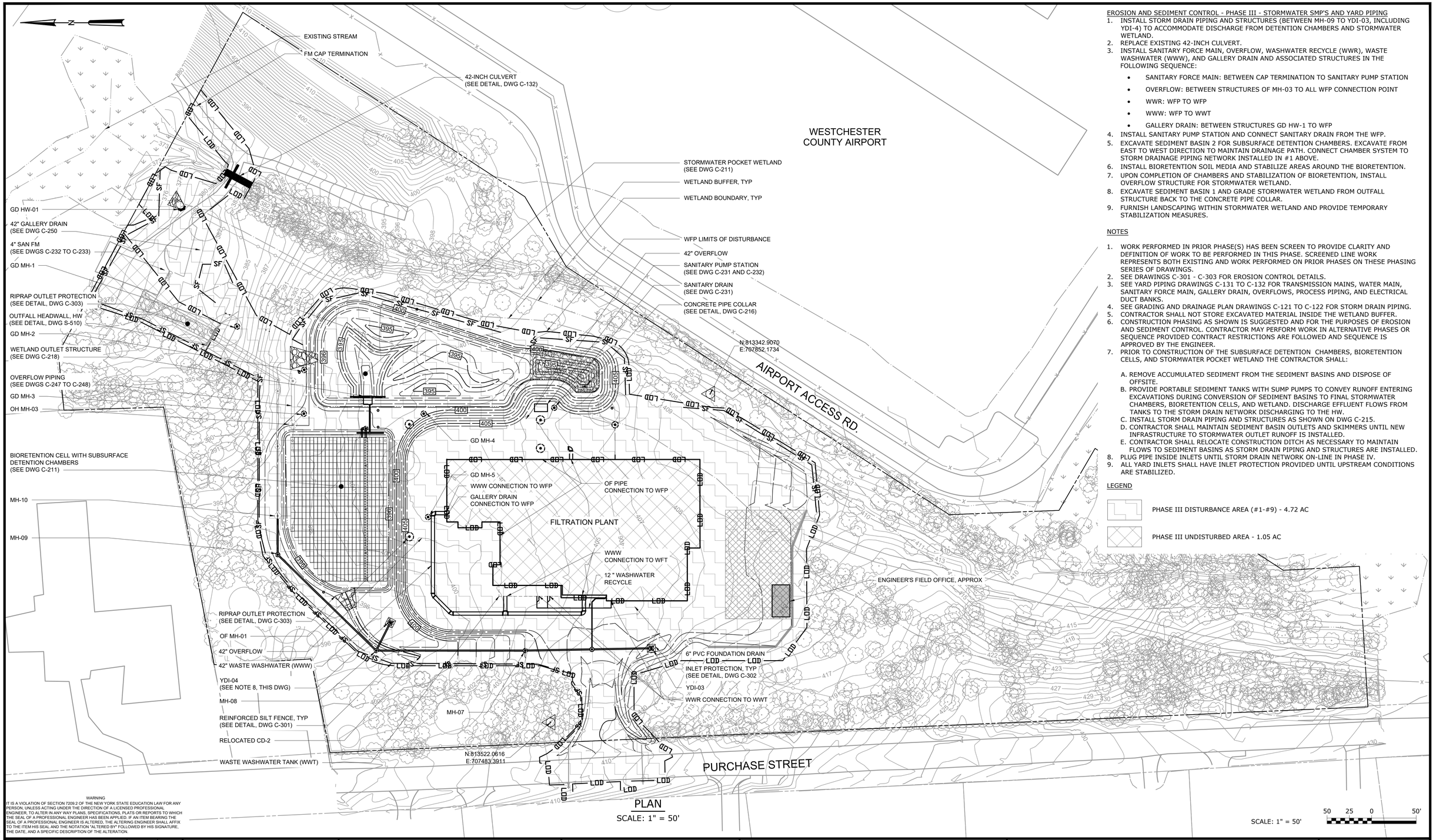

PLAN

SCALE: 1" = 50'

SCALE: 1" = 50'

50 25 0 50'

EROSION AND SEDIMENT CONTROL - PHASE III - STORMWATER SMP'S AND YARD PIPING

1. INSTALL STORM DRAIN PIPING AND STRUCTURES (BETWEEN MH-09 TO YDI-03, INCLUDING YDI-4) TO ACCOMMODATE DISCHARGE FROM DETENTION CHAMBERS AND STORMWATER WETLAND.
2. REPLACE EXISTING 42-INCH CULVERT.
3. INSTALL SANITARY FORCE MAIN, OVERFLOW, WASHWATER RECYCLE (WWR), WASTE WASHWATER (WWW), AND GALLERY DRAIN AND ASSOCIATED STRUCTURES IN THE FOLLOWING SEQUENCE:
   - SANITARY FORCE MAIN: BETWEEN CAP TERMINATION TO SANITARY PUMP STATION
   - OVERFLOW: BETWEEN STRUCTURES OF MH-03 TO ALL WFP CONNECTION POINT
   - WWR: WFP TO WFP
   - WWW: WFP TO WWT
   - GALLERY DRAIN: BETWEEN STRUCTURES GD HW-1 TO WFP
4. INSTALL SANITARY PUMP STATION AND CONNECT SANITARY DRAIN FROM THE WFP.
5. EXCAVATE SEDIMENT BASIN 2 FOR SUBSURFACE DETENTION CHAMBERS. EXCAVATE FROM EAST TO WEST DIRECTION TO MAINTAIN DRAINAGE PATH. CONNECT CHAMBER SYSTEM TO STORM DRAINAGE PIPING NETWORK INSTALLED IN #1 ABOVE.
6. INSTALL BIORETENTION SOIL MEDIA AND STABILIZE AREAS AROUND THE BIORETENTION.
7. UPON COMPLETION OF CHAMBERS AND STABILIZATION OF BIORETENTION, INSTALL OVERFLOW STRUCTURE FOR STORMWATER WETLAND.
8. EXCAVATE SEDIMENT BASIN 1 AND GRADE STORMWATER WETLAND FROM OUTFALL STRUCTURE BACK TO THE CONCRETE PIPE COLLAR.
9. FURNISH LANDSCAPING WITHIN STORMWATER WETLAND AND PROVIDE TEMPORARY STABILIZATION MEASURES.

NOTES

1. WORK PERFORMED IN PRIOR PHASE(S) HAS BEEN SCREEN TO PROVIDE CLARITY AND DEFINITION OF WORK TO BE PERFORMED IN THIS PHASE. SCREENED LINE WORK REPRESENTS BOTH EXISTING AND WORK PERFORMED ON PRIOR PHASES ON THESE PHASING SERIES OF DRAWINGS.
2. SEE DRAWINGS C-301 - C-303 FOR EROSION CONTROL DETAILS.
3. SEE YARD PIPING DRAWINGS C-131 TO C-132 FOR TRANSMISSION MAINS, WATER MAIN, SANITARY FORCE MAIN, GALLERY DRAIN, OVERFLOWS, PROCESS PIPING, AND ELECTRICAL DUCT BANKS.
4. SEE GRADING AND DRAINAGE PLAN DRAWINGS C-121 TO C-122 FOR STORM DRAIN PIPING.
5. CONTRACTOR SHALL NOT STORE EXCAVATED MATERIAL INSIDE THE WETLAND BUFFER.
6. CONSTRUCTION PHASING AS SHOWN IS SUGGESTED AND FOR THE PURPOSES OF EROSION AND SEDIMENT CONTROL. CONTRACTOR MAY PERFORM WORK IN ALTERNATIVE PHASES OR SEQUENCE PROVIDED CONTRACT RESTRICTIONS ARE FOLLOWED AND SEQUENCE IS APPROVED BY THE ENGINEER.
7. PRIOR TO CONSTRUCTION OF THE SUBSURFACE DETENTION CHAMBERS, BIORETENTION CELLS, AND STORMWATER POCKET WETLAND THE CONTRACTOR SHALL:
   A. REMOVE ACCUMULATED SEDIMENT FROM THE SEDIMENT BASINS AND DISPOSE OF OFFSITE.
   B. PROVIDE PORTABLE SEDIMENT TANKS WITH SUMP PUMPS TO CONVEY RUNOFF ENTERING EXCAVATIONS DURING CONVERSION OF SEDIMENT BASINS TO FINAL STORMWATER CHAMBERS, BIORETENTION CELLS, AND WETLAND. DISCHARGE EFFLUENT FLOWS FROM TANKS TO THE STORM DRAIN NETWORK DISCHARGING TO THE HW.
   C. INSTALL STORM DRAIN PIPING AND STRUCTURES AS SHOWN ON DWG C-215.
   D. CONTRACTOR SHALL MAINTAIN SEDIMENT BASIN OUTLETS AND SKIMMERS UNTIL NEW INFRASTRUCTURE TO STORMWATER OUTLET RUNOFF IS INSTALLED.
   E. CONTRACTOR SHALL RELOCATE CONSTRUCTION DITCH AS NECESSARY TO MAINTAIN FLOWS TO SEDIMENT BASINS AS STORM DRAIN PIPING AND STRUCTURES ARE INSTALLED.
8. PLUG PIPE INSIDE INLETS UNTIL STORM DRAIN NETWORK ON-LINE IN PHASE IV.
9. ALL YARD INLETS SHALL HAVE INLET PROTECTION PROVIDED UNTIL UPSTREAM CONDITIONS ARE STABILIZED.

LEGEND

PHASE III DISTURBANCE AREA (#1-#9) - 4.72 AC

PHASE III UNDISTURBED AREA - 1.05 AC

WARNING
IT IS A VIOLATION OF SECTION 7209.2 OF THE NEW YORK STATE EDUCATION LAW FOR ANY PERSON, UNLESS ACTING UNDER THE DIRECTION OF A LICENSED PROFESSIONAL ENGINEER, TO ALTER IN ANY WAY PLANS, SPECIFICATIONS, PLATS OR REPORTS TO WHICH THE SEAL OF A PROFESSIONAL ENGINEER HAS BEEN APPLIED. IF AN ITEM BEARING THE SEAL OF A PROFESSIONAL ENGINEER IS ALTERED, THE ALTERING ENGINEER SHALL AFFIX TO THE ITEM HIS SEAL AND THE NOTATION "ALTERED BY" FOLLOWED BY HIS SIGNATURE, THE DATE, AND A SPECIFIC DESCRIPTION OF THE ALTERATION.

REV	ISSUED FOR	DATE	BY

PROJECT ENGINEER:	R. FROST
DESIGNED BY:	J. TANNER
DRAWN BY:	J. TANNER
CHECKED BY:	D. SHEERAN

IF THIS BAR DOES NOT MEASURE 1" THEN DRAWING IS NOT TO FULL SCALE 0 1/2" 1"

BID SET

STATE OF NEW YORK DANIEL JAMES SHEERAN LICENSED PROFESSIONAL ENGINEER 088955

Hazen

HAZEN AND SAWYER
498 SEVENTH AVENUE, 11th FLOOR
NEW YORK, NEW YORK 10018

WESTCHESTER JOINT WATER WORKS
MAMARONECK, NY

RYE LAKE WATER FILTRATION PLANT
HARRISON, NY

CIVIL
EROSION AND SEDIMENT CONTROL PHASING PLAN - PHASE III

DATE:	FEB 2025
HAZEN NO.:	90388-000
CONTRACT NO.:	A1364-A
DRAWING NUMBER:	C-113

File: C:\USERS\JTANNER\DACCDOCS\HAZEN AND SAWYER\90388-000_RYE_LAKE_FILTRATION\PROJECT FILES\PROJECTWISE\CIVIL\C-113 Saved by JTANNER Save date: 2/11/2025 1:10 PM
PLOT DATE: 3/27/2025 11:22 AM BY: JTANNER

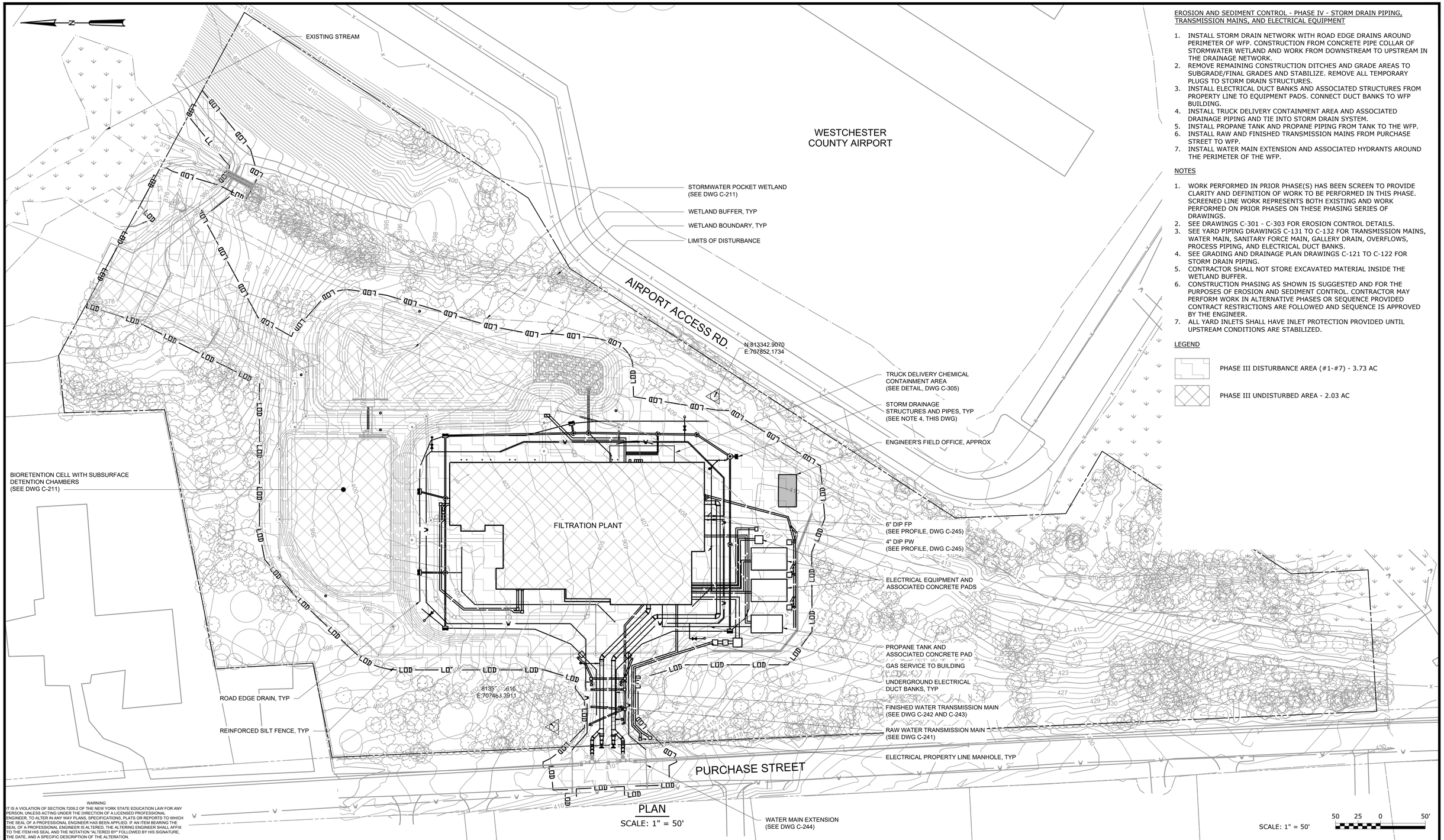

PLAN

SCALE: 1" = 50'

SCALE: 1" = 50'

50 25 0 50'

EROSION AND SEDIMENT CONTROL - PHASE IV - STORM DRAIN PIPING, TRANSMISSION MAINS, AND ELECTRICAL EQUIPMENT

1. INSTALL STORM DRAIN NETWORK WITH ROAD EDGE DRAINS AROUND PERIMETER OF WFP. CONSTRUCTION FROM CONCRETE PIPE COLLAR OF STORMWATER WETLAND AND WORK FROM DOWNSTREAM TO UPSTREAM IN THE DRAINAGE NETWORK.
2. REMOVE REMAINING CONSTRUCTION DITCHES AND GRADE AREAS TO SUBGRADE/FINAL GRADES AND STABILIZE. REMOVE ALL TEMPORARY PLUGS TO STORM DRAIN STRUCTURES.
3. INSTALL ELECTRICAL DUCT BANKS AND ASSOCIATED STRUCTURES FROM PROPERTY LINE TO EQUIPMENT PADS. CONNECT DUCT BANKS TO WFP BUILDING.
4. INSTALL TRUCK DELIVERY CONTAINMENT AREA AND ASSOCIATED DRAINAGE PIPING AND TIE INTO STORM DRAIN SYSTEM.
5. INSTALL PROPANE TANK AND PROPANE PIPING FROM TANK TO THE WFP.
6. INSTALL RAW AND FINISHED TRANSMISSION MAINS FROM PURCHASE STREET TO WFP.
7. INSTALL WATER MAIN EXTENSION AND ASSOCIATED HYDRANTS AROUND THE PERIMETER OF THE WFP.

NOTES

1. WORK PERFORMED IN PRIOR PHASE(S) HAS BEEN SCREEN TO PROVIDE CLARITY AND DEFINITION OF WORK TO BE PERFORMED IN THIS PHASE. SCREENED LINE WORK REPRESENTS BOTH EXISTING AND WORK PERFORMED ON PRIOR PHASES ON THESE PHASING SERIES OF DRAWINGS.
2. SEE DRAWINGS C-301 - C-303 FOR EROSION CONTROL DETAILS.
3. SEE YARD PIPING DRAWINGS C-131 TO C-132 FOR TRANSMISSION MAINS, WATER MAIN, SANITARY FORCE MAIN, GALLERY DRAIN, OVERFLOWS, PROCESS PIPING, AND ELECTRICAL DUCT BANKS.
4. SEE GRADING AND DRAINAGE PLAN DRAWINGS C-121 TO C-122 FOR STORM DRAIN PIPING.
5. CONTRACTOR SHALL NOT STORE EXCAVATED MATERIAL INSIDE THE WETLAND BUFFER.
6. CONSTRUCTION PHASING AS SHOWN IS SUGGESTED AND FOR THE PURPOSES OF EROSION AND SEDIMENT CONTROL. CONTRACTOR MAY PERFORM WORK IN ALTERNATIVE PHASES OR SEQUENCE PROVIDED CONTRACT RESTRICTIONS ARE FOLLOWED AND SEQUENCE IS APPROVED BY THE ENGINEER.
7. ALL YARD INLETS SHALL HAVE INLET PROTECTION PROVIDED UNTIL UPSTREAM CONDITIONS ARE STABILIZED.

LEGEND

PHASE III DISTURBANCE AREA (#1-#7) - 3.73 AC

PHASE III UNDISTURBED AREA - 2.03 AC

WARNING
IT IS A VIOLATION OF SECTION 7209.2 OF THE NEW YORK STATE EDUCATION LAW FOR ANY PERSON, UNLESS ACTING UNDER THE DIRECTION OF A LICENSED PROFESSIONAL ENGINEER, TO ALTER IN ANY WAY PLANS, SPECIFICATIONS, PLATS OR REPORTS TO WHICH THE SEAL OF A PROFESSIONAL ENGINEER HAS BEEN APPLIED. IF AN ITEM BEARING THE SEAL OF A PROFESSIONAL ENGINEER IS ALTERED, THE ALTERING ENGINEER SHALL AFFIX TO THE ITEM HIS SEAL AND THE NOTATION "ALTERED BY" FOLLOWED BY HIS SIGNATURE, THE DATE, AND A SPECIFIC DESCRIPTION OF THE ALTERATION.

REV	ISSUED FOR	DATE	BY

PROJECT ENGINEER:	R. FROST
DESIGNED BY:	J. TANNER
DRAWN BY:	J. TANNER
CHECKED BY:	D. SHEERAN

IF THIS BAR DOES NOT MEASURE 1" THEN DRAWING IS NOT TO FULL SCALE 0 1/2" 1"

BID SET

STATE OF NEW YORK · DANIEL JAMES SHEERAN · 088955 · LICENSED PROFESSIONAL ENGINEER

Hazen
HAZEN AND SAWYER
498 SEVENTH AVENUE, 11th FLOOR
NEW YORK, NEW YORK 10018

WESTCHESTER JOINT WATER WORKS
MAMARONECK, NY

RYE LAKE WATER FILTRATION PLANT
HARRISON, NY

CIVIL
EROSION AND SEDIMENT CONTROL PHASING PLAN - PHASE IV

DATE:	FEB 2025
HAZEN NO.:	90388-000
CONTRACT NO.:	A1364-A
DRAWING NUMBER:	C-114

File: C:\USERS\JTANNER\DOCACCDOCS\HAZEN AND SAWYER\90388-000_RYE_LAKE_FILTRATION\PROJECT FILES\PROJECTWISE\CIVIL\C-114 Saved by JTANNER Save date: 2/11/2025 1:12 PM
PLOT DATE: 3/27/2025 11:25 AM BY: JTANNER

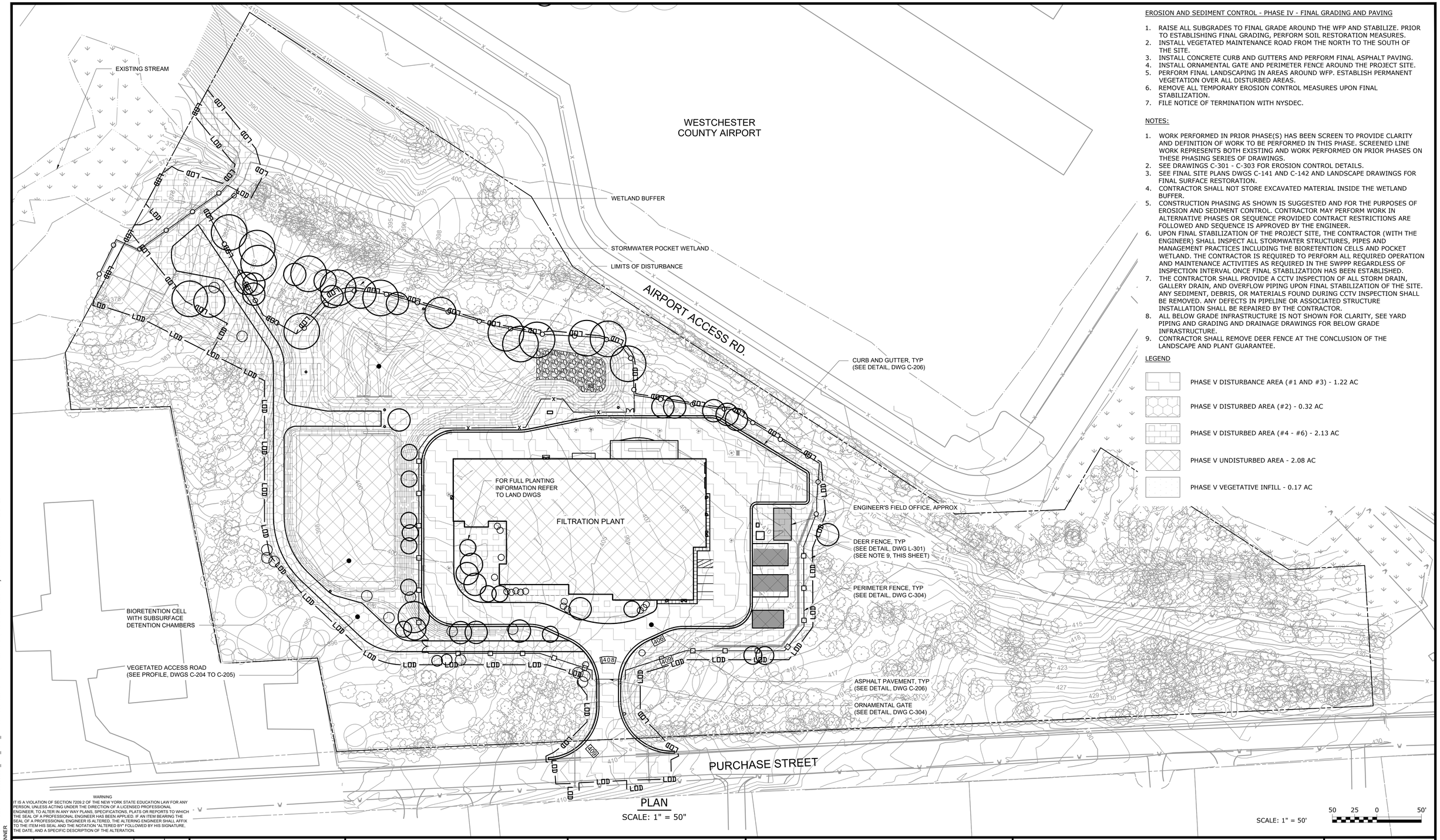

PLAN
SCALE: 1" = 50"

SCALE: 1" = 50'

50 25 0 50'

EROSION AND SEDIMENT CONTROL - PHASE IV - FINAL GRADING AND PAVING

1. RAISE ALL SUBGRADES TO FINAL GRADE AROUND THE WFP AND STABILIZE. PRIOR TO ESTABLISHING FINAL GRADING, PERFORM SOIL RESTORATION MEASURES.
2. INSTALL VEGETATED MAINTENANCE ROAD FROM THE NORTH TO THE SOUTH OF THE SITE.
3. INSTALL CONCRETE CURB AND GUTTERS AND PERFORM FINAL ASPHALT PAVING.
4. INSTALL ORNAMENTAL GATE AND PERIMETER FENCE AROUND THE PROJECT SITE.
5. PERFORM FINAL LANDSCAPING IN AREAS AROUND WFP. ESTABLISH PERMANENT VEGETATION OVER ALL DISTURBED AREAS.
6. REMOVE ALL TEMPORARY EROSION CONTROL MEASURES UPON FINAL STABILIZATION.
7. FILE NOTICE OF TERMINATION WITH NYSDEC.

NOTES:

1. WORK PERFORMED IN PRIOR PHASE(S) HAS BEEN SCREEN TO PROVIDE CLARITY AND DEFINITION OF WORK TO BE PERFORMED IN THIS PHASE. SCREENED LINE WORK REPRESENTS BOTH EXISTING AND WORK PERFORMED ON PRIOR PHASES ON THESE PHASING SERIES OF DRAWINGS.
2. SEE DRAWINGS C-301 - C-303 FOR EROSION CONTROL DETAILS.
3. SEE FINAL SITE PLANS DWGS C-141 AND C-142 AND LANDSCAPE DRAWINGS FOR FINAL SURFACE RESTORATION.
4. CONTRACTOR SHALL NOT STORE EXCAVATED MATERIAL INSIDE THE WETLAND BUFFER.
5. CONSTRUCTION PHASING AS SHOWN IS SUGGESTED AND FOR THE PURPOSES OF EROSION AND SEDIMENT CONTROL. CONTRACTOR MAY PERFORM WORK IN ALTERNATIVE PHASES OR SEQUENCE PROVIDED CONTRACT RESTRICTIONS ARE FOLLOWED AND SEQUENCE IS APPROVED BY THE ENGINEER.
6. UPON FINAL STABILIZATION OF THE PROJECT SITE, THE CONTRACTOR (WITH THE ENGINEER) SHALL INSPECT ALL STORMWATER STRUCTURES, PIPES AND MANAGEMENT PRACTICES INCLUDING THE BIORETENTION CELLS AND POCKET WETLAND. THE CONTRACTOR IS REQUIRED TO PERFORM ALL REQUIRED OPERATION AND MAINTENANCE ACTIVITIES AS REQUIRED IN THE SWPPP REGARDLESS OF INSPECTION INTERVAL ONCE FINAL STABILIZATION HAS BEEN ESTABLISHED.
7. THE CONTRACTOR SHALL PROVIDE A CCTV INSPECTION OF ALL STORM DRAIN, GALLERY DRAIN, AND OVERFLOW PIPING UPON FINAL STABILIZATION OF THE SITE. ANY SEDIMENT, DEBRIS, OR MATERIALS FOUND DURING CCTV INSPECTION SHALL BE REMOVED. ANY DEFECTS IN PIPELINE OR ASSOCIATED STRUCTURE INSTALLATION SHALL BE REPAIRED BY THE CONTRACTOR.
8. ALL BELOW GRADE INFRASTRUCTURE IS NOT SHOWN FOR CLARITY, SEE YARD PIPING AND GRADING AND DRAINAGE DRAWINGS FOR BELOW GRADE INFRASTRUCTURE.
9. CONTRACTOR SHALL REMOVE DEER FENCE AT THE CONCLUSION OF THE LANDSCAPE AND PLANT GUARANTEE.

LEGEND

- PHASE V DISTURBANCE AREA (#1 AND #3) - 1.22 AC
- PHASE V DISTURBED AREA (#2) - 0.32 AC
- PHASE V DISTURBED AREA (#4 - #6) - 2.13 AC
- PHASE V UNDISTURBED AREA - 2.08 AC
- PHASE V VEGETATIVE INFILL - 0.17 AC

WARNING
IT IS A VIOLATION OF SECTION 7209.2 OF THE NEW YORK STATE EDUCATION LAW FOR ANY PERSON, UNLESS ACTING UNDER THE DIRECTION OF A LICENSED PROFESSIONAL ENGINEER, TO ALTER IN ANY WAY PLANS, SPECIFICATIONS, PLATS OR REPORTS TO WHICH THE SEAL OF A PROFESSIONAL ENGINEER HAS BEEN APPLIED. IF AN ITEM BEARING THE SEAL OF A PROFESSIONAL ENGINEER IS ALTERED, THE ALTERING ENGINEER SHALL AFFIX TO THE ITEM HIS SEAL AND THE NOTATION "ALTERED BY" FOLLOWED BY HIS SIGNATURE, THE DATE, AND A SPECIFIC DESCRIPTION OF THE ALTERATION.

REV	ISSUED FOR	DATE	BY

PROJECT ENGINEER:	R. FROST
DESIGNED BY:	J. TANNER
DRAWN BY:	J. TANNER
CHECKED BY:	D. SHEERAN

IF THIS BAR DOES NOT MEASURE 1" THEN DRAWING IS NOT TO FULL SCALE (0 1/2" 1")

BID SET

STATE OF NEW YORK · DENNIS JAMES SHEERAN · 088955 · LICENSED PROFESSIONAL ENGINEER

Hazen

HAZEN AND SAWYER
498 SEVENTH AVENUE, 11th FLOOR
NEW YORK, NEW YORK 10018

WESTCHESTER JOINT WATER WORKS
MAMARONECK, NY

RYE LAKE WATER FILTRATION PLANT
HARRISON, NY

CIVIL
EROSION AND SEDIMENT CONTROL PHASING PLAN - PHASE V

DATE:	FEB 2025
HAZEN NO.:	90388-000
CONTRACT NO.:	A1364-A
DRAWING NUMBER:	C-115

File: C:\USERS\JTANNER\DC\ACCDOCS\HAZEN AND SAWYER\90388-000_RYE_LAKE_FILTRATION\PROJECT FILES\PROJECTWISE\CIVIL\C-115 Saved by: JTANNER Save date: 2/7/2025 2:44 PM
PLOT DATE: 3/27/2025 11:27 AM BY: JTANNER

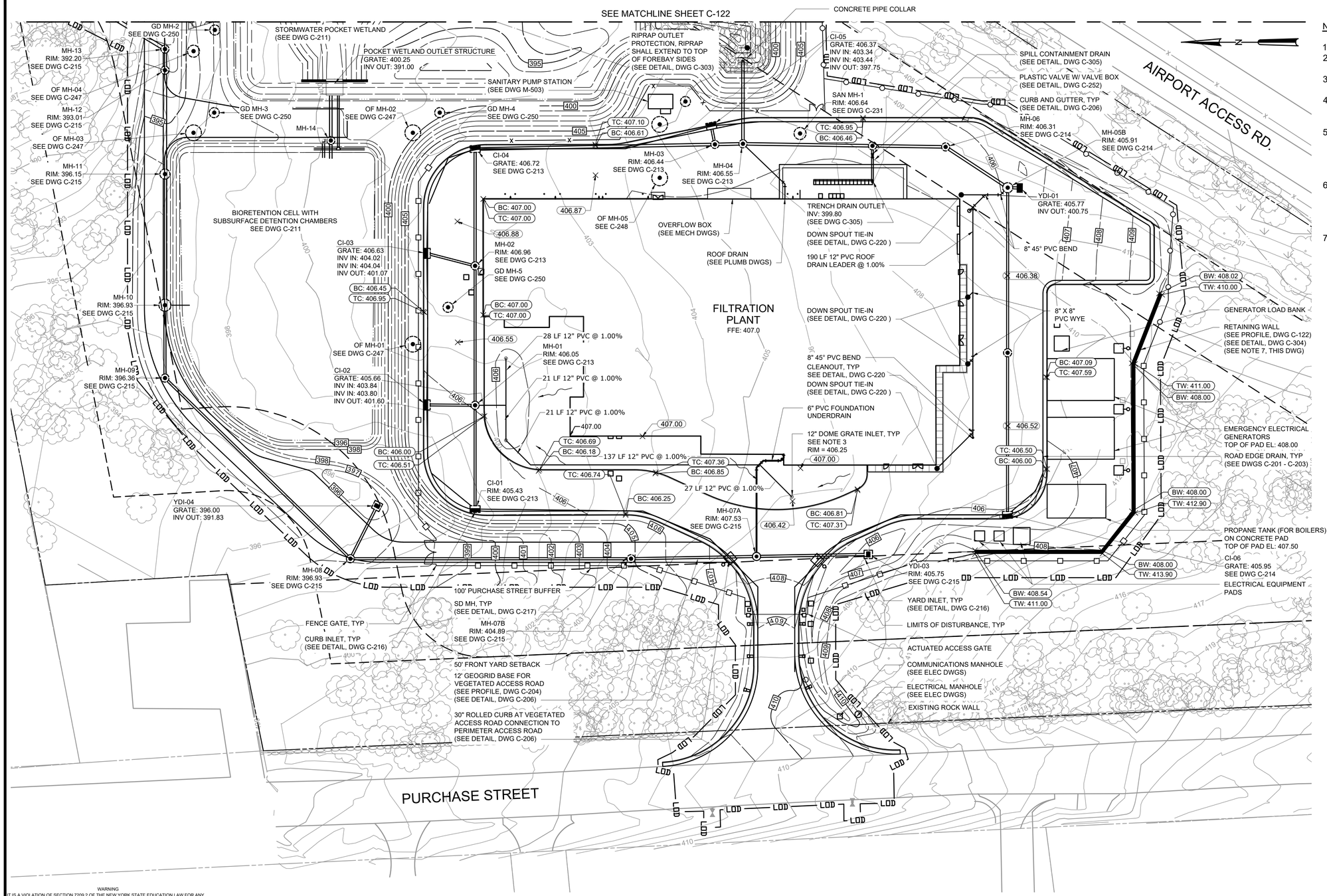

NOTES:

1. SEE DWG C-131 FOR YARD PIPING.
2. REFER TO DWG C-213 THROUGH C-215 FOR STORM DRAIN PROFILES.
3. INLET SHALL CONSIST OF A NYLOPLAST INLINE DRAIN WITH 12" DOME GRATE COVER, OR APPROVED EQUAL.
4. DIP STORM DRAIN PIPING SHALL BE OF GRADE 70 50 05 DUCTILE IRON IN ACCORDANCE WITH ANSI A21.51 (AWWA C151) AND BE LEAKAGE TESTED TO 50 PSI MIN.
5. HDPE STORM DRAIN PIPING AND FITTINGS SHALL BE SMOOTH LINED CORRUGATED WATERTIGHT HIGH-DENSITY POLYETHYLENE PIPE, AS MANUFACTURED BY HANCOR, INC., N-12 WT IB (WATERTIGHT) PIPE BY ADS, OR APPROVED EQUAL.
6. REINFORCED CONCRETE PIPE (RCP) FOR STORM DRAINS SHALL CONFIRM TO ASTM STANDARD C76, CLASS III, WALL THICKNESS B. PIPE JOINTS SHALL BE DESIGNED PER ASTM C-443-19A AND ASTM C-1628-19. PIPE SHALL BE PROVIDED WITH BELL AND SPIGOT ENDS.
7. TOP AND BOTTOM OF WALL ELEVATIONS IN PLAN VIEW REPRESENT THE GRADE AT THE TOP AND BOTTOM OF WALL AND NOT THE TOP AND BOTTOM OF THE STRUCTURE. SEE PROFILE ON DWG C-122 AND DETAIL ON DWG C-304.

PLAN
SCALE: 1" = 30'

SCALE: 1" = 30'
30 15 0 30'

WARNING
IT IS A VIOLATION OF SECTION 7209.2 OF THE NEW YORK STATE EDUCATION LAW FOR ANY PERSON, UNLESS ACTING UNDER THE DIRECTION OF A LICENSED PROFESSIONAL ENGINEER, TO ALTER IN ANY WAY PLANS, SPECIFICATIONS, PLATS OR REPORTS TO WHICH THE SEAL OF A PROFESSIONAL ENGINEER HAS BEEN APPLIED. IF AN ITEM BEARING THE SEAL OF A PROFESSIONAL ENGINEER IS ALTERED, THE ALTERING ENGINEER SHALL AFFIX TO THE ITEM HIS SEAL AND THE NOTATION "ALTERED BY" FOLLOWED BY HIS SIGNATURE, THE DATE, AND A SPECIFIC DESCRIPTION OF THE ALTERATION.

REV	ISSUED FOR	DATE	BY

PROJECT ENGINEER:	R. FROST
DESIGNED BY:	C. MCNICOL
DRAWN BY:	J. TANNER
CHECKED BY:	D. SHEERAN

IF THIS BAR DOES NOT MEASURE 1" THEN DRAWING IS NOT TO FULL SCALE 0 1/2" 1"

BID SET



Hazen

HAZEN AND SAWYER
498 SEVENTH AVENUE, 11th FLOOR
NEW YORK, NEW YORK 10018

WESTCHESTER JOINT WATER WORKS
MAMARONECK, NY

RYE LAKE WATER FILTRATION PLANT
HARRISON, NY

CIVIL
GRADING AND DRAINAGE PLAN - AREA 1

DATE:	FEB 2025
HAZEN NO.:	90388-000
CONTRACT NO.:	A1364-A
DRAWING NUMBER:	C-121

File: C:\USERS\JTANNER\DC\ACCDOCS\HAZEN AND SAWYER\90388-000_RYE_LAKE_FILTRATION\PROJECT FILES\PROJECTWISE\CIVIL\C-121 Saved by JTANNER Save date: 3/27/2025 2:54 PM
PLOT DATE: 3/27/2025 2:54 PM BY: JTANNER

NOTES:

1. SEE DWG C-132 FOR YARD PIPING
2. REFER TO DWG C-213 THROUGH C-215 FOR STORM DRAIN PROFILES.

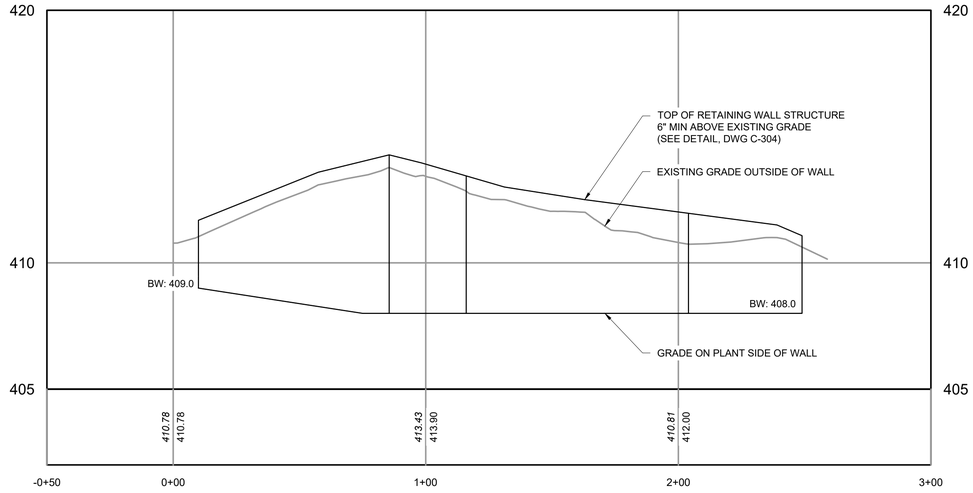

RETAINING WALL PROFILE

HORIZONTAL SCALE: 1" = 30'
VERTICAL SCALE: 1" = 3'

PLAN

SCALE: 1" = 30'

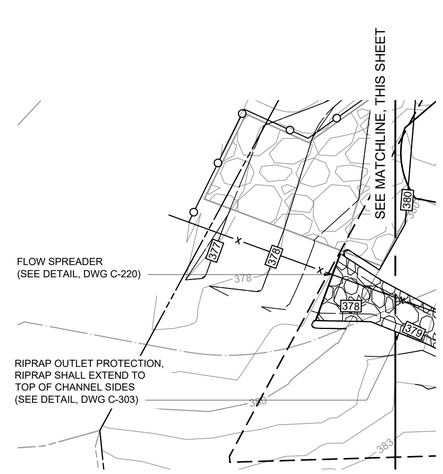

INSET A

SCALE: 1" = 30'

SCALE: 1" = 30'

30 15 0 30'

WARNING
IT IS A VIOLATION OF SECTION 7209.2 OF THE NEW YORK STATE EDUCATION LAW FOR ANY PERSON, UNLESS ACTING UNDER THE DIRECTION OF A LICENSED PROFESSIONAL ENGINEER, TO ALTER IN ANY WAY PLANS, SPECIFICATIONS, PLATS OR REPORTS TO WHICH THE SEAL OF A PROFESSIONAL ENGINEER HAS BEEN APPLIED. IF AN ITEM BEARING THE SEAL OF A PROFESSIONAL ENGINEER IS ALTERED, THE ALTERING ENGINEER SHALL AFFIX TO THE ITEM HIS SEAL AND THE NOTATION "ALTERED BY" FOLLOWED BY HIS SIGNATURE, THE DATE, AND A SPECIFIC DESCRIPTION OF THE ALTERATION

REV	ISSUED FOR	DATE	BY

PROJECT ENGINEER:	R. FROST
DESIGNED BY:	C. MCNICOL
DRAWN BY:	J. TANNER
CHECKED BY:	D. SHEERAN

IF THIS BAR DOES NOT MEASURE 1" THEN DRAWING IS NOT TO FULL SCALE 0 1/2" 1"

BID SET

STATE OF NEW YORK — ROBERT JAMES SHEERAN — 088955 — LICENSED PROFESSIONAL ENGINEER

Hazen

HAZEN AND SAWYER
498 SEVENTH AVENUE, 11th FLOOR
NEW YORK, NEW YORK 10018

WESTCHESTER JOINT WATER WORKS
MAMARONECK, NY

RYE LAKE WATER FILTRATION PLANT
HARRISON, NY

CIVIL
GRADING AND DRAINAGE PLAN - AREA 2

DATE:	FEB 2025
HAZEN NO.:	90388-000
CONTRACT NO.:	A1364-A
DRAWING NUMBER:	C-122

File: C:\USERS\JTANNER\DC\ACCDOCS\HAZEN AND SAWYER\90388-000_RYE_LAKE_FILTRATION\PROJECT FILES\PROJECTWISE\CIVIL\C-122 Saved by JTANNER Save date: 3/24/2025 2:25 PM
PLOT DATE: 3/26/2025 6:38 PM BY: JTANNER

SEE MATCHLINE SHEET C-132

SANITARY PUMP STATION (SEE DWGS M-503 & M-504)

STORMWATER POCKET WETLAND (SEE DWG C-211)

CONCRETE PIPE COLLAR (SEE DETAIL, DWG C-216)

8" PVC SAN DRAIN (SEE PROFILE DWG C-231)

FIRE HYDRANT WITH VALVE (SEE DETAIL DWG C-252)

4" PVC SAN FM (SEE PROFILE DWGS C-232 & C-233)

WETLAND OUTLET STRUCTURE, (SEE DWG C-211)

18" SD

ELECTRICAL DUCTBANK

FIRE HYDRANT WITH VALVE (SEE DETAIL, DWG C-252)

AIRPORT ACCESS RD

15" SD

8" SD

18" SD

18" SD

18" SD

CONCRETE ENCASEMENT, TYP (SEE DETAIL, DWG C-251)

30" GD

30" GD

7+00

8+00

6+00

100' WETLAND BUFFER

2 - 45° BEND

42" DIP OF

16" SD

22.5° BEND

4" PVC SS

8" PVC SS

CHEMICAL CONNECTION, TYP (SEE MECH DWGS)

OVERFLOW BOX (SEE MECH DWGS)

2 - 45° BEND

5+00

9+00

90° BEND

42" DIP OF

30" DIP OF

BIORETENTION CELL WITH SUBSURFACE DETENTION CHAMBERS (SEE DWG C-211)

FILTRATION PLANT

FFE: 407.0

FDC

6" DIP FP (SEE PROFILE DWG C-245)

4" DIP PW (SEE PROFILE DWG C-245)

8" X 6" TEE

8" X 4" TEE

ELECTRICAL DUCT BANK (TYP)

PORTABLE GENERATOR DOCKING PAD

RETAINING WALL

GENERATOR LOAD BANK

OF MH, TYP (SEE DETAIL, DWG C-234)

SD MH, TYP (SEE DETAIL, DWG C-217)

14" SD

42" DIP WWW (SEE PROFILE DWG C-249)

12" DIP WWR (SEE PROFILE DWG C-244)

4+00

10+00

2 - 45° BEND

45° BEND

90° BEND

90° BEND

1+00

0+00

EMERGENCY ELECTRICAL GENERATORS

PROPANE TANK (FOR BOILERS) ON CONCRETE PAD

FIRE HYDRANT WITH VALVE (SEE DETAIL, DWG C-252)

3+00

2+00

11+00

GAS

42" DIP OF

2 - 45° BEND

18" SD

2 - 45° BEND

12" BLOW-OFF (SEE DETAIL, DWG C-241)

48" DIP FINISHED WATER TRANSMISSION MAIN (SEE PROFILE DWGS C-242 & C-243)

ELECTRICAL EQUIPMENT

FIRE HYDRANT WITH VALVE (SEE DETAIL, DWG C-252)

4" PPE PROPANE LINE

2 - 45° BEND

24" W x 24" H ELECTRICAL DUCTBANK (SEE DETAIL B, DWG E-601)

16" W x 8" H COMMUNICATIONS DUCTBANK (SEE DETAIL D, DWG E-601)

6" BLOW-OFF (SEE DETAIL, DWG C-243)

COMMUNICATIONS MANHOLE (SEE ELEC DWGS)

ELECTRICAL MANHOLE (SEE ELEC DWGS)

VEGETATED ACCESS ROAD (SEE DWG C-204)

SEE GRADING AND DRAINAGE PLANS C-121 AND C-122 FOR STORM DRAIN PIPING

ACTUATED ACCESS GATE

48" DIP RAW WATER TRANSMISSION MAIN (SEE PROFILE DWG C-241)

36" DIP RAW WATER TRANSMISSION MAIN

VALVE BOX, TYP (SEE DETAIL DWG C-252)

1+00

12+00

EXISTING ROCK WALL

SEE ENLARGED PLAN (THIS DWG)

CONNECT TO EXISTING 8" WATER MAIN

36" DIP FINISHED WATER TRANSMISSION MAIN

13+00

CONNECT TO EX. 36" BFV (SEE NOTE 3, THIS DWG)

CONNECT TO EX. 36" BFV (SEE NOTE 3, THIS DWG)

PURCHASE STREET

EX. 36" WATER MAIN

13+31

0+00

8" DIP WATER MAIN (SEE PROFILE DWG C-244)

EX. 20" DIP WATER MAIN

8" DIP WATER MAIN (SEE PROFILE DWG C-244)

CONNECTION TO EXISTING 20" WATER MAIN BY OTHERS

SCALE: 1" = 30'

30 15 0 30'

PLAN

SCALE: 1" = 30'

NOTES:

1. EXISTING AND FINAL CONTOURS NOT SHOWN FOR CLARITY. SEE DWG C-121 FOR CONTOURS.
2. REFER TO DWGS C-121, C-213-C-215, & C-211 FOR STORM DRAINAGE SYSTEM INFORMATION. STORM DRAINAGE SHOWN ON THIS SHEET SCREENED FOR INFORMATION ONLY.
3. CONTRACTOR SHALL REMOVE EXISTING CAPS AND CONNECT TRANSMISSION MAINS TO EXISTING BUTTERFLY VALVES.
4. REFER TO MECHANICAL DRAWINGS FOR YARD PIPING CONNECTIONS AT STRUCTURES.
5. ALL VALVES SHALL BE GATE UNLESS OTHERWISE NOTED.
6. GATE VALVES ON TRANSMISSION MAINS SHALL BE INSTALLED HORIZONTALLY. SEE DETAIL SHEET C-252.
7. ALL DIP SHALL BE SPECIAL THICKNESS CLASS 53 WITH MECHANICAL JOINT FITTINGS AND RESTRAINED JOINTS GLANDS. ALL JOINTS SHALL BE RESTRAINED. ALL DIP SHALL BE DOUBLE CEMENT LINED ON THE INSIDE.
8. UPON ACCEPTANCE OF THE WATER MAIN INSTALLATION AND PRIOR TO STARTUP, CONTRACTOR SHALL REMOVE THE 36" BUTTERFLY VALVES AND CONNECTING LENGTH OF PIPE AND INSTALL PLUGS ON THE EXPOSED SIDE OF THE 36"x36" TEES. THE RAW WATER AND FINISHED WATER TRANSMISSION MAINS SHALL NOT BE USED UNTIL THE INTERCONNECTION HAS BEEN REMOVED.

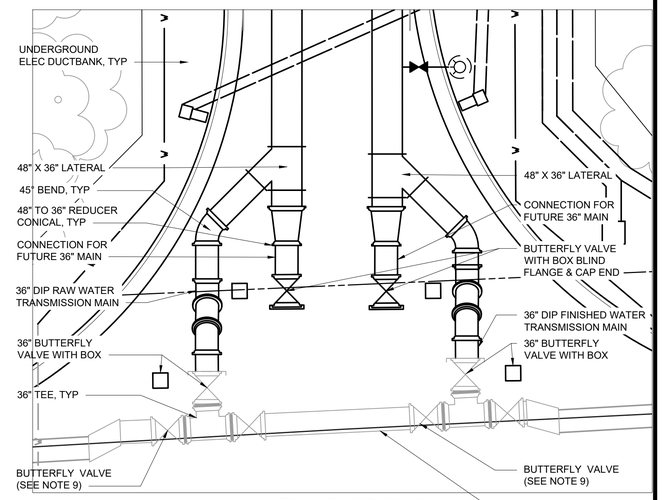

SCALE: 1" = 10'

10 5 0 10'

ENLARGED PLAN

SCALE: 1" = 10'

WARNING
IT IS A VIOLATION OF SECTION 7209.2 OF THE NEW YORK STATE EDUCATION LAW FOR ANY PERSON, UNLESS ACTING UNDER THE DIRECTION OF A LICENSED PROFESSIONAL ENGINEER, TO ALTER IN ANY WAY PLANS, SPECIFICATIONS, PLATS OR REPORTS TO WHICH THE SEAL OF A PROFESSIONAL ENGINEER HAS BEEN APPLIED. IF AN ITEM BEARING THE SEAL OF A PROFESSIONAL ENGINEER IS ALTERED, THE ALTERING ENGINEER SHALL AFFIX TO THE ITEM HIS SEAL AND THE NOTATION "ALTERED BY" FOLLOWED BY HIS SIGNATURE, THE DATE, AND A SPECIFIC DESCRIPTION OF THE ALTERATION.

REV	ISSUED FOR	DATE	BY

PROJECT ENGINEER:	R. FROST
DESIGNED BY:	J. TANNER
DRAWN BY:	J. TANNER
CHECKED BY:	D. SHEERAN

IF THIS BAR DOES NOT MEASURE 1" THEN DRAWING IS NOT TO FULL SCALE 0 1/2" 1"

BID SET

STATE OF NEW YORK DANIEL JAMES SHEERAN 088955 LICENSED PROFESSIONAL ENGINEER

Hazen

HAZEN AND SAWYER
498 SEVENTH AVENUE, 11th FLOOR
NEW YORK, NEW YORK 10018

WESTCHESTER JOINT WATER WORKS
MAMARONECK, NY

RYE LAKE WATER FILTRATION PLANT
HARRISON, NY

CIVIL
YARD PIPING PLAN - AREA 1

DATE:	FEB 2025
HAZEN NO.:	90388-000
CONTRACT NO.:	A1364-A
DRAWING NUMBER:	C-131

File: C:\USERS\JTANNER\DACADOCS\HAZEN AND SAWYER\90388-000_RYE_LAKE_FILTRATION\PROJECT FILES\PROJECTWISE\CIVIL\C-131 Saved by JTANNER Save date: 3/24/2025 2:50 PM
PLOT DATE: 3/27/2025 10:26 AM BY: JTANNER

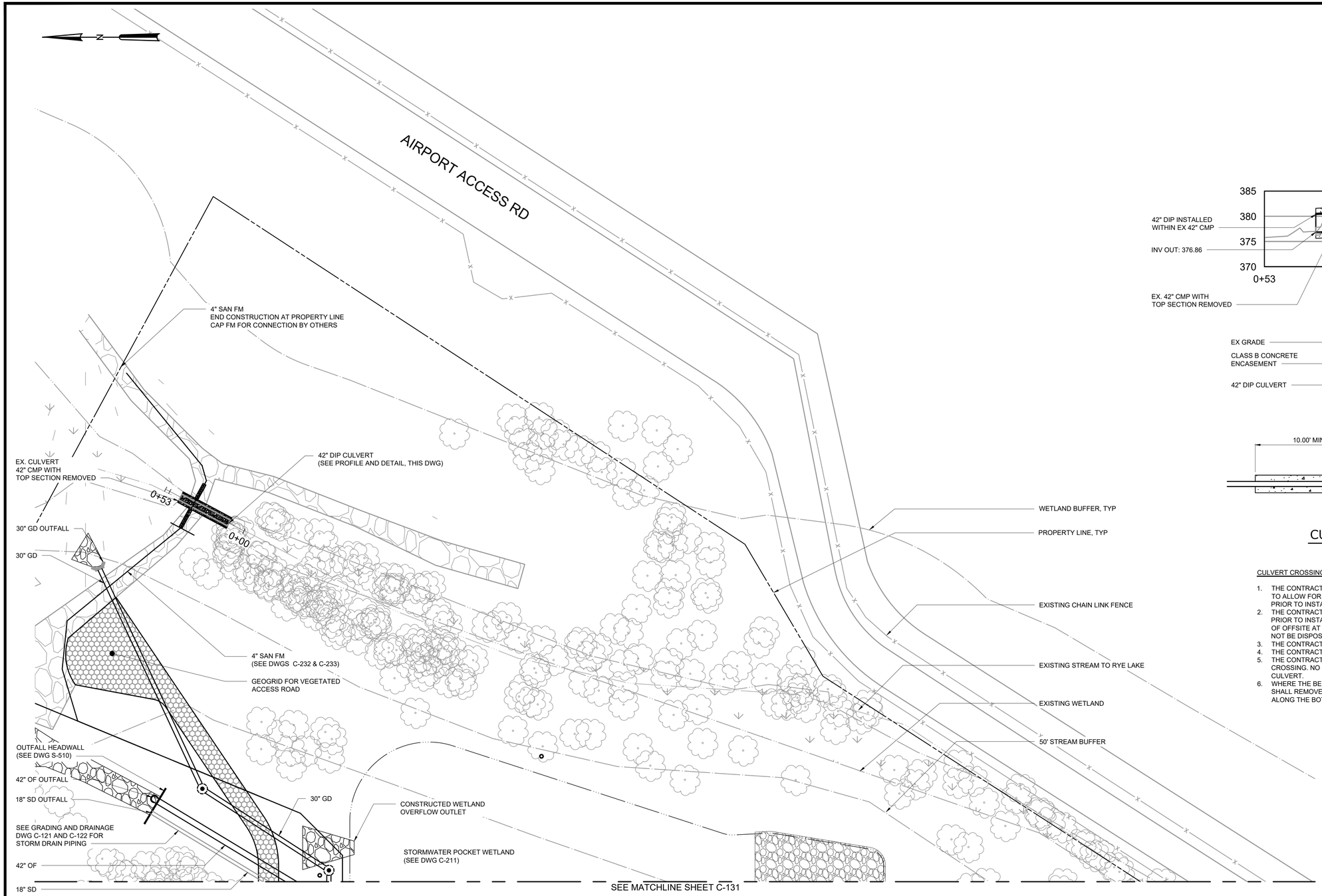

PLAN

SCALE: 1" = 30'

NOTES:

1. EXISTING AND FINAL CONTOURS NOT SHOWN FOR CLARITY. SEE DWG C-122 FOR CONTOURS.
2. REFER TO DWG C-122, C-213-C-215, & C-211 FOR STORM DRAINAGE SYSTEM INFORMATION.

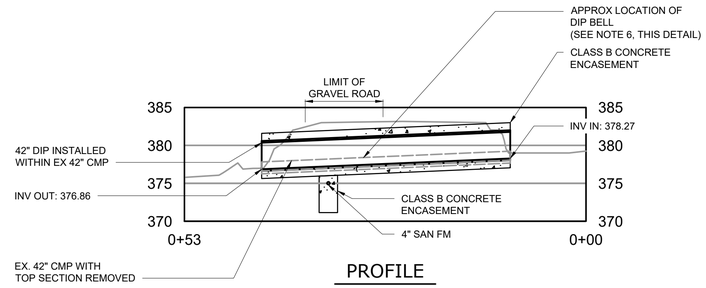

PROFILE

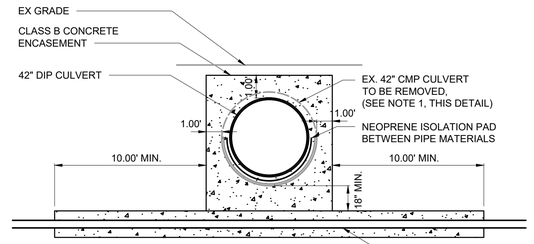

SECTION

CULVERT CROSSING DETAIL

SCALE: NTS

CULVERT CROSSING NOTES:

1. THE CONTRACTOR SHALL HAND DIG EXISTING CULVERT AND REMOVE CROWN OF CMP TO ALLOW FOR INSTALLATION OF DIP CULVERT. DIP CULVERT SHALL BE INSTALLED PRIOR TO INSTALLATION OF SANITARY FORCE MAIN.
2. THE CONTRACTOR SHALL REMOVE ALL DEBRIS AND SEDIMENT FROM THE CULVERT PRIOR TO INSTALLATION OF DIP CULVERT. DEBRIS AND SEDIMENT SHALL BE DISPOSED OF OFFSITE AT THE APPLICABLE DISPOSAL FACILITIES. DEBRIS AND SEDIMENT SHALL NOT BE DISPOSED OF WITHIN ADJACENT WETLANDS.
3. THE CONTRACTOR SHALL MAINTAIN FLOW THROUGH THE CULVERT AT ALL TIMES.
4. THE CONTRACTOR SHALL PERFORM WORK ON CULVERT DURING DRY WEATHER ONLY.
5. THE CONTRACTOR SHALL INSTALL ONE FILL LENGTH OF PIPE CENTERED ON THE CROSSING. NO PIPE JOINTS OR FITTINGS SHALL BE INSTALLED UNDERNEATH THE CULVERT.
6. WHERE THE BELL OF THE DIP CULVERT INTERFACES WITH THE CMP, THE CONTRACTOR SHALL REMOVE A SECTION OF THE CMP TO ALLOW PLACEMENT OF THE DIP FLUSH ALONG THE BOTTOM OF THE EXISTING CULVERT TO MATCH THE EXISTING SLOPE.

SCALE: 1" = 30'

30 15 0 30'

WARNING
IT IS A VIOLATION OF SECTION 7209.2 OF THE NEW YORK STATE EDUCATION LAW FOR ANY PERSON, UNLESS ACTING UNDER THE DIRECTION OF A LICENSED PROFESSIONAL ENGINEER, TO ALTER IN ANY WAY PLANS, SPECIFICATIONS, PLATS OR REPORTS TO WHICH THE SEAL OF A PROFESSIONAL ENGINEER HAS BEEN APPLIED. IF AN ITEM BEARING THE SEAL OF A PROFESSIONAL ENGINEER IS ALTERED, THE ALTERING ENGINEER SHALL AFFIX TO THE ITEM HIS SEAL AND THE NOTATION "ALTERED BY" FOLLOWED BY HIS SIGNATURE, THE DATE, AND A SPECIFIC DESCRIPTION OF THE ALTERATION.

REV	ISSUED FOR	DATE	BY

PROJECT ENGINEER:	R. FROST
DESIGNED BY:	J. TANNER
DRAWN BY:	J. TANNER
CHECKED BY:	D. SHEERAN

IF THIS BAR DOES NOT MEASURE 1" THEN DRAWING IS NOT TO FULL SCALE (0 1/2" 1")

BID SET

Hazen
HAZEN AND SAWYER
498 SEVENTH AVENUE, 11th FLOOR
NEW YORK, NEW YORK 10018

WESTCHESTER JOINT WATER WORKS
MAMARONECK, NY

RYE LAKE WATER FILTRATION PLANT
HARRISON, NY

CIVIL
YARD PIPING PLAN - AREA 2

DATE:	FEB 2025
HAZEN NO.:	90388-000
CONTRACT NO.:	A1364-A
DRAWING NUMBER:	C-132

File: C:\USERS\JTANNER\DOCACCDOCS\HAZEN AND SAWYER\90388-000_RYE_LAKE_FILTRATION\PROJECT FILES\PROJECTWISE\CIVIL\C-132 Saved by JTANNER Save date: 2/11/2025 1:22 PM
PLOT DATE: 3/26/2025 11:21 PM BY: JTANNER

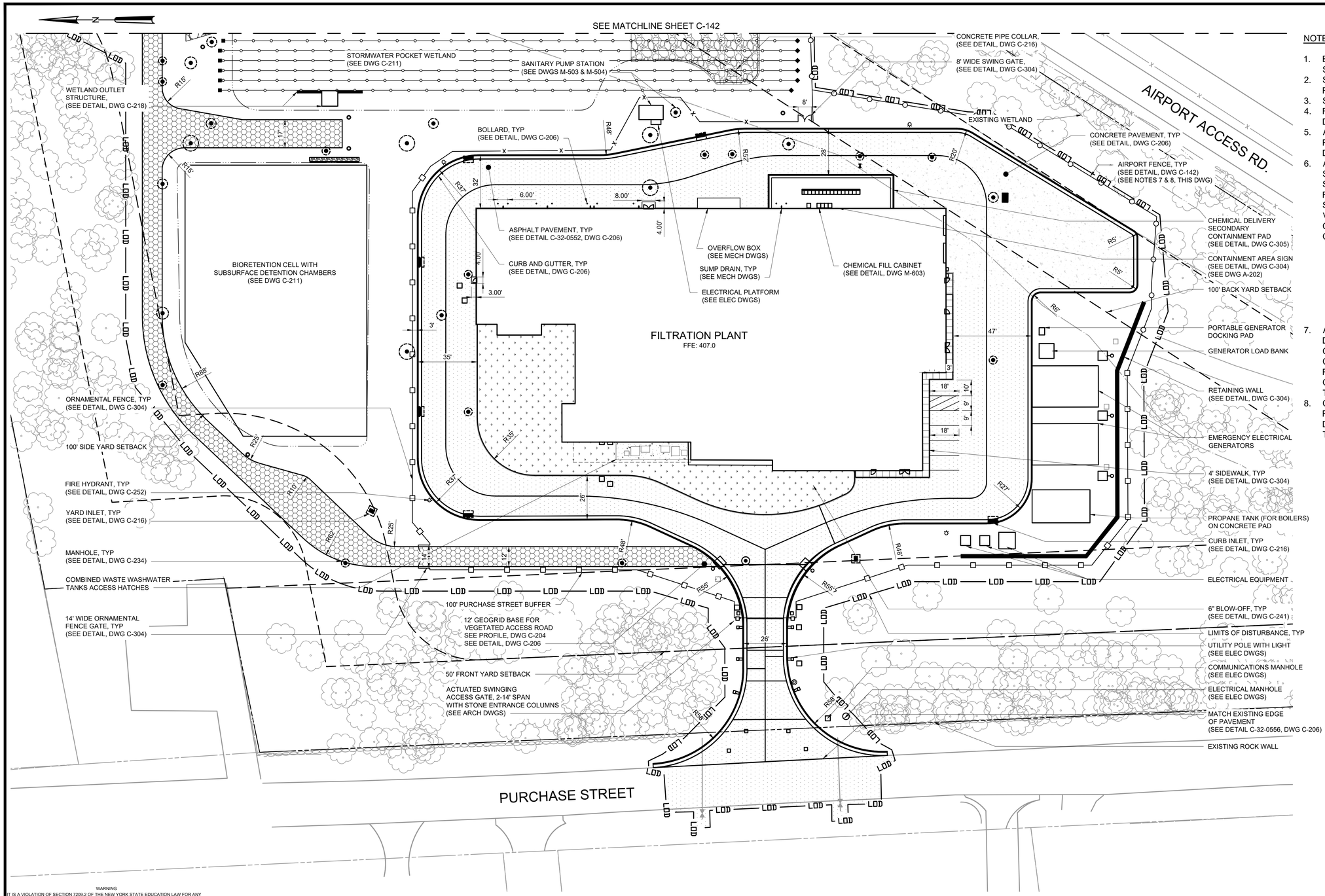

PLAN

SCALE: 1" = 30'

SCALE: 1" = 30'

30' 15' 0 30'

NOTES:

1. EXISTING AND FINAL CONTOURS NOT SHOWN FOR CLARITY. SEE SHEET C-121 FOR TOPOGRAPHIC INFORMATION.
2. SEE SHEET C-121 FOR UNDERGROUND STORMWATER PIPING.
3. SEE SHEET C-131 FOR YARD PIPING.
4. REFER TO SHEETS C-213 THROUGH C-215 FOR STORM DRAIN PROFILES.
5. ALL DISTURBED AREAS THAT ARE NOT PAVED SHALL BE RESTORED BY TOPSOIL AND SEEDING. SEE LANDSCAPE DWGS.
6. ALL AREAS DESIGNATED FOR LANDSCAPE RESTORATION SHALL HAVE SOILS RESTORED IN ACCORDANCE WITH THE SOIL RESTORATION TABLE ON DRAWING C-301. SOIL RESTORATION IS NOT REQUIRED FOR AREAS OF STRUCTURES, BUILDING, EQUIPMENT PADS, RIP RAP, VEGETATED AND PAVED ROADWAYS. ALL AREAS SHALL BE CONSIDERED AREAS OF CUT OR FILL WITH THE EXCEPTION OF THE FOLLOWING:
   A. THE BIORETENTION CELL SHALL BE CONSIDERED AN AREA OF RUNOFF REDUCTION PRACTICES ARE APPLIED.
   B. THE INFILL AREAS (SEE DWG C-102 AND LANDSCAPE DWGS) SHALL BE CONSIDERED MINIMAL SOIL DISTURBANCE.
7. AIRPORT FENCE SHALL BE REVIEWED BY WCA OFFICIALS DURING INITIAL INSTALLATION AND PRIOR TO SUBSTANTIAL COMPLETION. ANY DAMAGE TO THE FENCE DURING THE COURSE OF CONSTRUCTION ACTIVITIES SHALL BE REPLACED AND RESTORED TO THE SATISFACTION OF THE OWNER, ENGINEER AND WCA AT NO ADDITIONAL COST TO THE OWNER.
8. CONTRACTOR SHALL ASSUME AN ADDITIONAL 50-FEET OF FENCE REPLACEMENT BEYOND WHAT IS SHOWN ON THE DRAWINGS TO ACCOMMODATE FIELD CONDITIONS AND TRANSITION OF EXISTING FENCE TO NEW FENCE.

WARNING
IT IS A VIOLATION OF SECTION 7209.2 OF THE NEW YORK STATE EDUCATION LAW FOR ANY PERSON, UNLESS ACTING UNDER THE DIRECTION OF A LICENSED PROFESSIONAL ENGINEER, TO ALTER IN ANY WAY PLANS, SPECIFICATIONS, PLATS OR REPORTS TO WHICH THE SEAL OF A PROFESSIONAL ENGINEER HAS BEEN APPLIED. IF AN ITEM BEARING THE SEAL OF A PROFESSIONAL ENGINEER IS ALTERED, THE ALTERING ENGINEER SHALL AFFIX TO THE ITEM HIS SEAL AND THE NOTATION "ALTERED BY" FOLLOWED BY HIS SIGNATURE, THE DATE, AND A SPECIFIC DESCRIPTION OF THE ALTERATION.

REV	ISSUED FOR	DATE	BY

PROJECT ENGINEER: R. FROST
DESIGNED BY: C. MCNICOL
DRAWN BY: J. TANNER
CHECKED BY: D. SHEERAN

IF THIS BAR DOES NOT MEASURE 1" THEN DRAWING IS NOT TO FULL SCALE 0 1/2" 1"

BID SET

STATE OF NEW YORK DANIEL JAMES SHEERAN 088955 LICENSED PROFESSIONAL ENGINEER

Hazen

HAZEN AND SAWYER
498 SEVENTH AVENUE, 11th FLOOR
NEW YORK, NEW YORK 10018

WESTCHESTER JOINT WATER WORKS
MAMARONECK, NY

RYE LAKE WATER FILTRATION PLANT
HARRISON, NY

CIVIL
FINAL SITE PLAN - AREA 1

DATE: FEB 2025
HAZEN NO.: 90388-000
CONTRACT NO.: A1364-A
DRAWING NUMBER: C-141

File: C:\USERS\JTANNER\DCACDOCS\HAZEN AND SAWYER\90388-000_RYE_LAKE_FILTRATION\PROJECT FILES\PROJECTWISE\CIVIL\C-141A Saved by JTANNER Save date: 3/25/2025 12:46 PM
PLOT DATE: 3/27/2025 10:29 AM BY: JTANNER

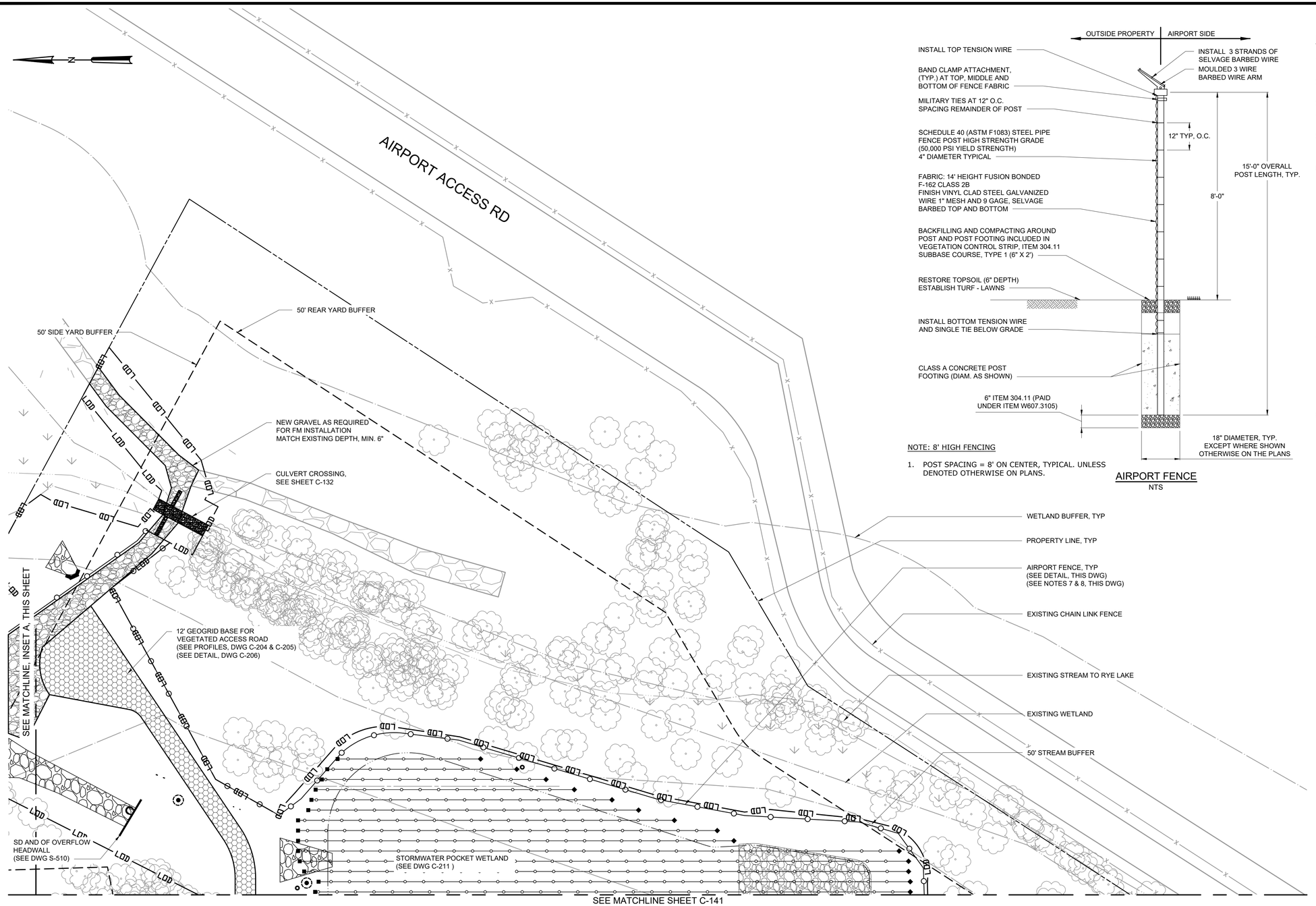

PLAN
SCALE: 1" = 30'

NOTE: 8' HIGH FENCING

1. POST SPACING = 8' ON CENTER, TYPICAL. UNLESS DENOTED OTHERWISE ON PLANS.

AIRPORT FENCE
NTS

NOTES:

1. EXISTING AND FINAL CONTOURS NOT SHOWN FOR CLARITY. SEE SHEET C-121 FOR TOPOGRAPHIC INFORMATION.
2. SEE SHEET C-121 FOR UNDERGROUND STORMWATER PIPING.
3. SEE SHEET C-131 FOR YARD PIPING.
4. REFER TO SHEETS C-213 THROUGH C-215 FOR STORM DRAIN PROFILES.
5. ALL DISTURBED AREAS THAT ARE NOT PAVED SHALL BE RESTORED BY TOPSOIL AND SEEDING. SEE LANDSCAPE DWGS.
6. ALL AREAS DESIGNATED FOR LANDSCAPE RESTORATION SHALL HAVE SOILS RESTORED IN ACCORDANCE WITH THE SOIL RESTORATION TABLE ON DRAWING C-301. SOIL RESTORATION IS NOT REQUIRED FOR AREAS OF STRUCTURES, BUILDING, EQUIPMENT PADS, RIP RAP, VEGETATED AND PAVED ROADWAYS. ALL AREAS SHALL BE CONSIDERED AREAS OF CUT OR FILL WITH THE EXCEPTION OF THE FOLLOWING:
   A. THE BIORETENTION CELL SHALL BE CONSIDERED AN AREA OF RUNOFF REDUCTION PRACTICES ARE APPLIED.
   B. THE INFILL AREAS (SEE DWG C-102 AND LANDSCAPE DWGS) SHALL BE CONSIDERED MINIMAL SOIL DISTURBANCE.
7. AIRPORT FENCE SHALL BE REVIEWED BY WCA OFFICIALS DURING INITIAL INSTALLATION AND PRIOR TO SUBSTANTIAL COMPLETION. ANY DAMAGE TO THE FENCE DURING THE COURSE OF CONSTRUCTION ACTIVITIES SHALL BE REPLACED AND RESTORED TO THE SATISFACTION OF THE OWNER, ENGINEER AND WCA AT NO ADDITIONAL COST TO THE OWNER.
8. CONTRACTOR SHALL ASSUME AN ADDITIONAL 50-FEET OF FENCE REPLACEMENT BEYOND WHAT IS SHOWN ON THE DRAWINGS TO ACCOMMODATE FIELD CONDITIONS AND TRANSITION OF EXISTING FENCE TO NEW FENCE.

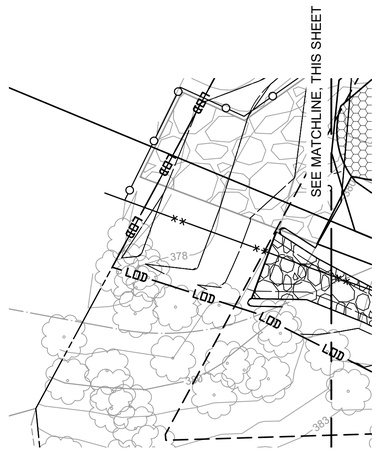

INSET A
SCALE: 1" = 30'

SCALE: 1" = 30'

30 15 0 30'

WARNING
IT IS A VIOLATION OF SECTION 7209.2 OF THE NEW YORK STATE EDUCATION LAW FOR ANY PERSON, UNLESS ACTING UNDER THE DIRECTION OF A LICENSED PROFESSIONAL ENGINEER, TO ALTER IN ANY WAY PLANS, SPECIFICATIONS, PLATS OR REPORTS TO WHICH THE SEAL OF A PROFESSIONAL ENGINEER HAS BEEN APPLIED. IF AN ITEM BEARING THE SEAL OF A PROFESSIONAL ENGINEER IS ALTERED, THE ALTERING ENGINEER SHALL AFFIX TO THE ITEM HIS SEAL AND THE NOTATION "ALTERED BY" FOLLOWED BY HIS SIGNATURE, THE DATE, AND A SPECIFIC DESCRIPTION OF THE ALTERATION.

REV	ISSUED FOR	DATE	BY

PROJECT ENGINEER:	R. FROST
DESIGNED BY:	C. MCNICOL
DRAWN BY:	J. TANNER
CHECKED BY:	D. SHEERAN

IF THIS BAR DOES NOT MEASURE 1" THEN DRAWING IS NOT TO FULL SCALE 0 1/2" 1"

BID SET

STATE OF NEW YORK · DANIEL JAMES SHEERAN · 088955 · LICENSED PROFESSIONAL ENGINEER

Hazen

HAZEN AND SAWYER
498 SEVENTH AVENUE, 11th FLOOR
NEW YORK, NEW YORK 10018

WESTCHESTER JOINT WATER WORKS
MAMARONECK, NY

RYE LAKE WATER FILTRATION PLANT
HARRISON, NY

CIVIL
FINAL SITE PLAN - AREA 2

DATE:	FEB 2025
HAZEN NO.:	90388-000
CONTRACT NO.:	A1364-A
DRAWING NUMBER:	C-142

File: C:\USERS\JTANNER\DOCUMENTS\ACCDOCS\HAZEN AND SAWYER\90388-000_RYE_LAKE_FILTRATION\PROJECT FILES\PROJECTWISE\CIVIL\C-142 Saved by JTANNER Save date: 2/11/2025 1:35 PM
PLOT DATE: 3/26/2025 11:22 PM BY: JTANNER

SEE MATCHLINE SHEET C-152

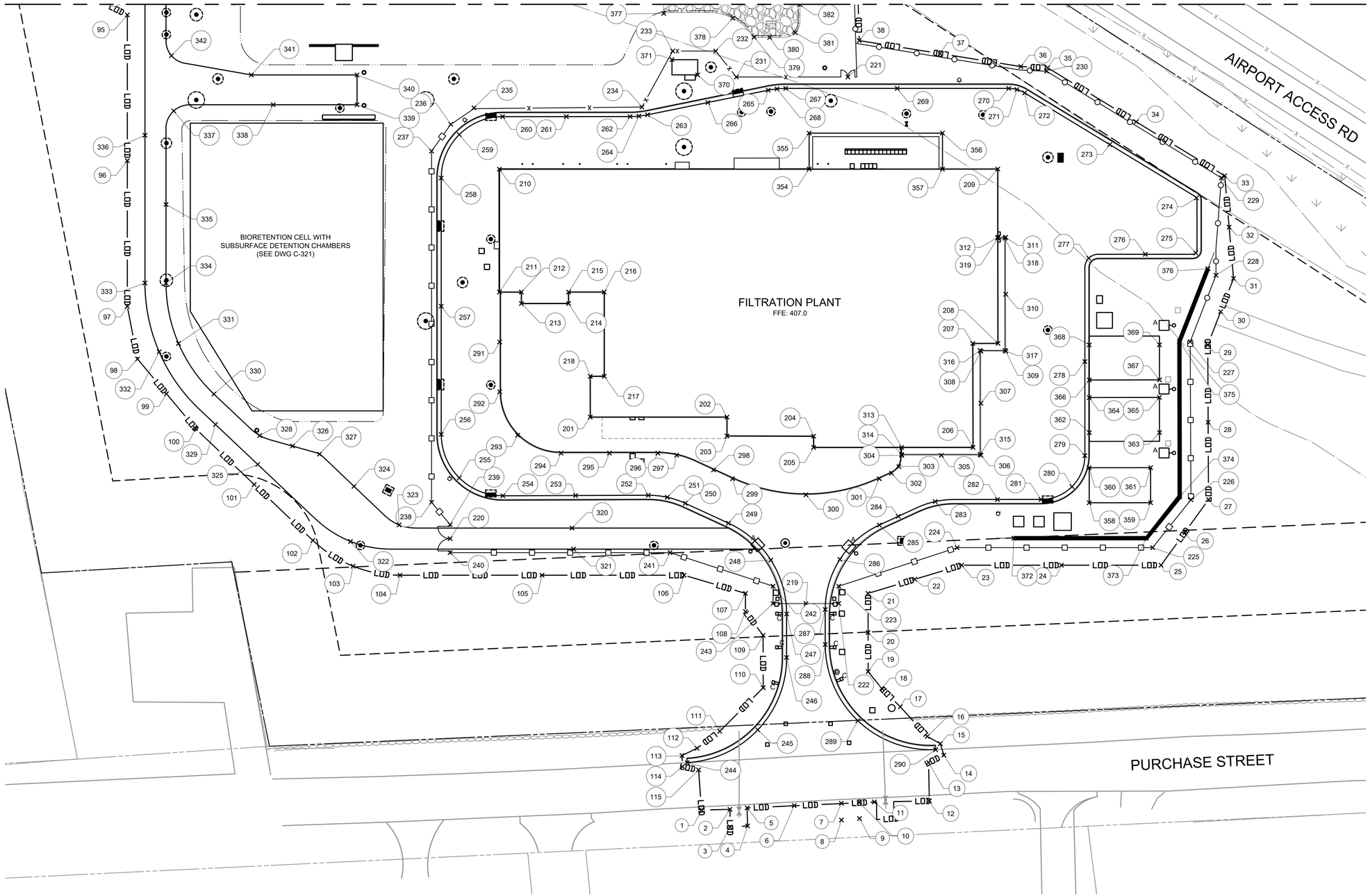

PLAN
SCALE: 1" = 30'

SCALE: 1" = 30'

30' 15' 0 30'

WARNING
IT IS A VIOLATION OF SECTION 7209.2 OF THE NEW YORK STATE EDUCATION LAW FOR ANY PERSON, UNLESS ACTING UNDER THE DIRECTION OF A LICENSED PROFESSIONAL ENGINEER, TO ALTER IN ANY WAY PLANS, SPECIFICATIONS, PLATS OR REPORTS TO WHICH THE SEAL OF A PROFESSIONAL ENGINEER HAS BEEN APPLIED. IF AN ITEM BEARING THE SEAL OF A PROFESSIONAL ENGINEER IS ALTERED, THE ALTERING ENGINEER SHALL AFFIX TO THE ITEM HIS SEAL AND THE NOTATION "ALTERED BY" FOLLOWED BY HIS SIGNATURE, THE DATE, AND A SPECIFIC DESCRIPTION OF THE ALTERATION.

REV	ISSUED FOR	DATE	BY

PROJECT ENGINEER:	R. FROST
DESIGNED BY:	K. ROBBINS
DRAWN BY:	K. ROBBINS
CHECKED BY:	D. SHEERAN

IF THIS BAR DOES NOT MEASURE 1" THEN DRAWING IS NOT TO FULL SCALE 0 1/2" 1"

BID SET

STATE OF NEW YORK — CHRISTOPHER JAMES SHEERAN — 088955 — LICENSED PROFESSIONAL ENGINEER

Hazen
HAZEN AND SAWYER
498 SEVENTH AVENUE, 11th FLOOR
NEW YORK, NEW YORK 10018

WESTCHESTER JOINT WATER WORKS
MAMARONECK, NY

RYE LAKE WATER FILTRATION PLANT
HARRISON, NY

CIVIL
STAKING PLAN - AREA 1

DATE:	FEB 2025
HAZEN NO.:	90388-000
CONTRACT NO.:	A1364-A
DRAWING NUMBER:	C-151

File: C:\USERS\JTANNER\DC\ACCDOCS\HAZEN AND SAWYER\90388-000_RYE_LAKE_FILTRATION\PROJECT FILES\PROJECTWISE\CIVIL\C-151_STAKING Saved by JTANNER Save date: 2/11/2025 1:37 PM
PLOT DATE: 3/27/2025 11:29 AM BY: JTANNER

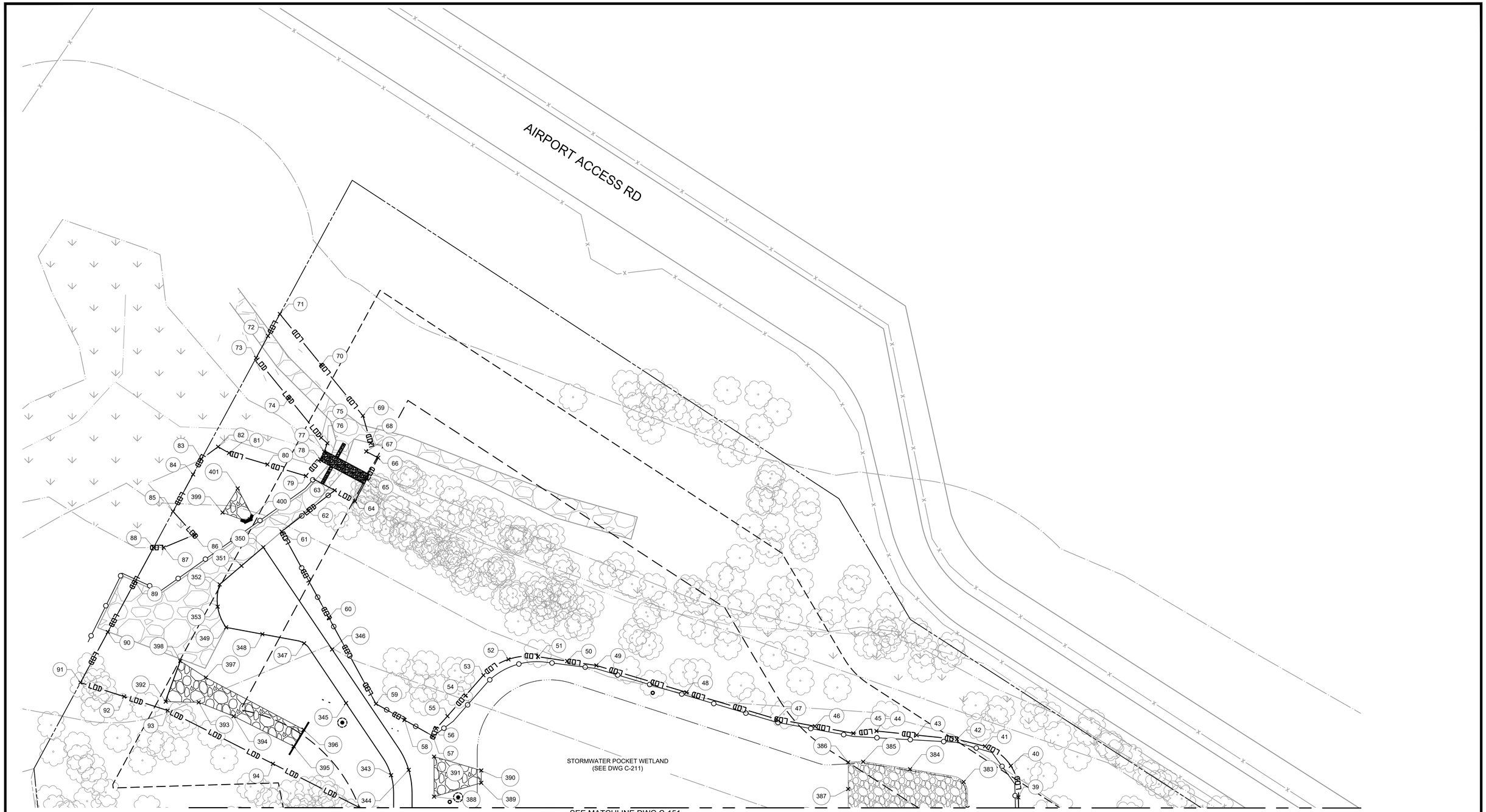

PLAN
SCALE: 1" = 30'

SCALE: 1" = 30'

30 15 0 30'

WARNING
IT IS A VIOLATION OF SECTION 7209.2 OF THE NEW YORK STATE EDUCATION LAW FOR ANY PERSON, UNLESS ACTING UNDER THE DIRECTION OF A LICENSED PROFESSIONAL ENGINEER, TO ALTER IN ANY WAY PLANS, SPECIFICATIONS, PLATS OR REPORTS TO WHICH THE SEAL OF A PROFESSIONAL ENGINEER HAS BEEN APPLIED. IF AN ITEM BEARING THE SEAL OF A PROFESSIONAL ENGINEER IS ALTERED, THE ALTERING ENGINEER SHALL AFFIX TO THE ITEM HIS SEAL AND THE NOTATION "ALTERED BY" FOLLOWED BY HIS SIGNATURE, THE DATE, AND A SPECIFIC DESCRIPTION OF THE ALTERATION.

REV	ISSUED FOR	DATE	BY

PROJECT ENGINEER:	R. FROST
DESIGNED BY:	K. ROBBINS
DRAWN BY:	K. ROBBINS
CHECKED BY:	D. SHEERAN

IF THIS BAR DOES NOT MEASURE 1" THEN DRAWING IS NOT TO FULL SCALE 0 1/2" 1"

BID SET

STATE OF NEW YORK · CHRISTOPHER JAMES SHEERAN · 088955 · LICENSED PROFESSIONAL ENGINEER

Hazen

HAZEN AND SAWYER
498 SEVENTH AVENUE, 11th FLOOR
NEW YORK, NEW YORK 10018

WESTCHESTER JOINT WATER WORKS
MAMARONECK, NY

RYE LAKE WATER FILTRATION PLANT
HARRISON, NY

CIVIL
STAKING PLAN - AREA 2

DATE:	FEB 2025
HAZEN NO.:	90388-000
CONTRACT NO.:	A1364-A
DRAWING NUMBER:	C-152

File: C:\USERS\JTANNER\DC\ACCDOCS\HAZEN AND SAWYER\90388-000_RYE_LAKE_FILTRATION\PROJECT FILES\PROJECTWISE\CIVIL\C-152_STAKING Saved by JTANNER Save date: 2/11/2025 1:41 PM
PLOT DATE: 3/26/2025 11:23 PM BY: JTANNER

STAKING TABLE

POINT #	NORTHING	EASTING	DESCRIPTION
1	813521.69	707411.73	LIMIT OF DISTURBANCE
2	813505.45	707412.11	LIMIT OF DISTURBANCE
3	813505.40	707402.11	LIMIT OF DISTURBANCE
4	813495.43	707402.66	LIMIT OF DISTURBANCE
5	813495.71	707412.94	LIMIT OF DISTURBANCE
6	813468.85	707414.26	LIMIT OF DISTURBANCE
7	813441.99	707415.58	LIMIT OF DISTURBANCE
8	813441.92	707406.04	LIMIT OF DISTURBANCE
9	813431.63	707406.87	LIMIT OF DISTURBANCE
10	813431.79	707416.08	LIMIT OF DISTURBANCE
11	813423.20	707416.32	LIMIT OF DISTURBANCE
12	813391.82	707416.95	LIMIT OF DISTURBANCE
13	813392.26	707438.80	LIMIT OF DISTURBANCE
14	813383.54	707443.03	LIMIT OF DISTURBANCE
15	813385.60	707449.57	LIMIT OF DISTURBANCE
16	813393.02	707453.70	LIMIT OF DISTURBANCE
17	813408.38	707470.60	LIMIT OF DISTURBANCE
18	813418.92	707481.05	LIMIT OF DISTURBANCE
19	813426.70	707490.64	LIMIT OF DISTURBANCE
20	813426.73	707512.94	LIMIT OF DISTURBANCE
21	813426.76	707535.23	LIMIT OF DISTURBANCE
22	813400.09	707543.27	LIMIT OF DISTURBANCE
23	813373.41	707551.30	LIMIT OF DISTURBANCE
24	813316.57	707551.30	LIMIT OF DISTURBANCE
25	813259.74	707551.30	LIMIT OF DISTURBANCE
26	813246.22	707569.99	LIMIT OF DISTURBANCE
27	813232.71	707588.67	LIMIT OF DISTURBANCE
28	813232.92	707632.76	LIMIT OF DISTURBANCE
29	813233.13	707676.86	LIMIT OF DISTURBANCE
30	813225.79	707695.79	LIMIT OF DISTURBANCE
31	813218.45	707714.73	LIMIT OF DISTURBANCE
32	813220.95	707744.00	LIMIT OF DISTURBANCE
33	813223.45	707773.28	LIMIT OF DISTURBANCE
34	813273.92	707804.07	LIMIT OF DISTURBANCE
35	813324.39	707834.85	LIMIT OF DISTURBANCE
36	813339.71	707835.53	LIMIT OF DISTURBANCE
37	813385.75	707842.94	LIMIT OF DISTURBANCE
38	813431.80	707850.35	LIMIT OF DISTURBANCE
39	813432.56	707877.72	LIMIT OF DISTURBANCE
40	813437.43	707898.24	LIMIT OF DISTURBANCE
41	813454.24	707910.98	LIMIT OF DISTURBANCE
42	813472.50	707915.53	LIMIT OF DISTURBANCE
43	813498.66	707918.20	LIMIT OF DISTURBANCE
44	813524.83	707920.88	LIMIT OF DISTURBANCE
45	813539.90	707919.38	LIMIT OF DISTURBANCE
46	813564.85	707924.01	LIMIT OF DISTURBANCE
47	813589.81	707928.64	LIMIT OF DISTURBANCE
48	813648.42	707946.08	LIMIT OF DISTURBANCE
49	813707.04	707963.52	LIMIT OF DISTURBANCE
50	813726.02	707966.37	LIMIT OF DISTURBANCE

STAKING TABLE

POINT #	NORTHING	EASTING	DESCRIPTION
51	813745.01	707969.21	LIMIT OF DISTURBANCE
52	813764.21	707967.50	LIMIT OF DISTURBANCE
53	813780.49	707957.19	LIMIT OF DISTURBANCE
54	813792.18	707943.87	LIMIT OF DISTURBANCE
55	813803.87	707930.55	LIMIT OF DISTURBANCE
56	813811.28	707922.44	LIMIT OF DISTURBANCE
57	813813.19	707917.51	LIMIT OF DISTURBANCE
58	813831.78	707928.05	LIMIT OF DISTURBANCE
59	813850.38	707938.59	LIMIT OF DISTURBANCE
60	813881.03	707994.62	LIMIT OF DISTURBANCE
61	813911.69	708050.66	LIMIT OF DISTURBANCE
62	813894.45	708064.04	LIMIT OF DISTURBANCE
63	813877.22	708077.42	LIMIT OF DISTURBANCE
64	813863.98	708070.36	LIMIT OF DISTURBANCE
65	813856.37	708084.63	LIMIT OF DISTURBANCE
66	813848.93	708098.58	LIMIT OF DISTURBANCE
67	813856.68	708102.69	LIMIT OF DISTURBANCE
68	813853.78	708108.10	LIMIT OF DISTURBANCE
69	813858.88	708125.95	LIMIT OF DISTURBANCE
70	813885.88	708159.03	LIMIT OF DISTURBANCE
71	813912.89	708192.10	LIMIT OF DISTURBANCE
72	813920.61	708177.84	LIMIT OF DISTURBANCE
73	813928.33	708163.57	LIMIT OF DISTURBANCE
74	813907.16	708137.61	LIMIT OF DISTURBANCE
75	813886.00	708111.66	LIMIT OF DISTURBANCE
76	813881.98	708108.08	LIMIT OF DISTURBANCE
77	813884.04	708102.47	LIMIT OF DISTURBANCE
78	813886.59	708097.68	LIMIT OF DISTURBANCE
79	813895.95	708086.78	LIMIT OF DISTURBANCE
80	813920.97	708094.26	LIMIT OF DISTURBANCE
81	813945.99	708101.74	LIMIT OF DISTURBANCE
82	813953.06	708105.77	LIMIT OF DISTURBANCE
83	813963.92	708097.76	LIMIT OF DISTURBANCE
84	813969.33	708087.77	LIMIT OF DISTURBANCE
85	813982.35	708063.69	LIMIT OF DISTURBANCE
86	813968.58	708048.46	LIMIT OF DISTURBANCE
87	813988.41	708040.23	LIMIT OF DISTURBANCE
88	813995.07	708040.19	LIMIT OF DISTURBANCE
89	814006.99	708018.14	LIMIT OF DISTURBANCE
90	814024.78	707985.26	LIMIT OF DISTURBANCE
91	814042.57	707952.37	LIMIT OF DISTURBANCE
92	814014.21	707943.29	LIMIT OF DISTURBANCE
93	813985.84	707934.21	LIMIT OF DISTURBANCE
94	813917.40	707899.58	LIMIT OF DISTURBANCE
95	813848.96	707864.96	LIMIT OF DISTURBANCE
96	813848.96	707781.89	LIMIT OF DISTURBANCE
97	813848.96	707698.82	LIMIT OF DISTURBANCE
98	813843.14	707668.86	LIMIT OF DISTURBANCE
99	813826.62	707649.03	LIMIT OF DISTURBANCE
100	813810.11	707629.20	LIMIT OF DISTURBANCE

STAKING TABLE

POINT #	NORTHING	EASTING	DESCRIPTION
101	813776.66	707597.33	LIMIT OF DISTURBANCE
102	813743.21	707565.45	LIMIT OF DISTURBANCE
103	813720.29	707550.73	LIMIT OF DISTURBANCE
104	813693.54	707545.58	LIMIT OF DISTURBANCE
105	813612.57	707545.58	LIMIT OF DISTURBANCE
106	813531.61	707545.59	LIMIT OF DISTURBANCE
107	813496.61	707535.23	LIMIT OF DISTURBANCE
108	813496.65	707524.87	LIMIT OF DISTURBANCE
109	813486.58	707511.29	LIMIT OF DISTURBANCE
110	813486.52	707481.47	LIMIT OF DISTURBANCE
111	813511.29	707456.58	LIMIT OF DISTURBANCE
112	813524.22	707446.96	LIMIT OF DISTURBANCE
113	813532.81	707442.81	LIMIT OF DISTURBANCE
114	813532.56	707436.47	LIMIT OF DISTURBANCE
115	813523.34	707434.62	LIMIT OF DISTURBANCE
201	813585.10	707635.71	FILTRATION PLANT
202	813507.17	707635.71	FILTRATION PLANT
203	813507.17	707624.97	FILTRATION PLANT
204	813457.76	707624.82	FILTRATION PLANT
205	813457.76	707618.42	FILTRATION PLANT
206	813366.91	707618.44	FILTRATION PLANT
207	813367.06	707677.69	FILTRATION PLANT
208	813352.73	707677.75	FILTRATION PLANT
209	813352.81	707777.11	FILTRATION PLANT
210	813636.87	707777.03	FILTRATION PLANT
211	813636.85	707706.97	FILTRATION PLANT
212	813624.35	707706.97	FILTRATION PLANT
213	813624.35	707700.47	FILTRATION PLANT
214	813597.45	707700.48	FILTRATION PLANT
215	813597.46	707706.98	FILTRATION PLANT
216	813577.12	707706.98	FILTRATION PLANT
217	813577.11	707658.98	FILTRATION PLANT
218	813585.11	707658.98	FILTRATION PLANT
219	813462.18	707529.44	GATE
220	813664.98	707566.46	GATE
221	813438.26	707829.58	GATE
222	813443.47	707529.44	FENCE
223	813443.47	707539.33	FENCE
224	813375.99	707561.30	FENCE
225	813264.54	707561.30	FENCE
226	813242.71	707588.62	FENCE
227	813243.14	707678.70	FENCE
228	813228.45	707716.60	FENCE
229	813225.36	707772.10	FENCE
230	813325.00	707832.88	FENCE
231	813501.83	707829.58	FENCE
232	813513.61	707844.38	FENCE
233	813538.09	707844.38	FENCE
234	813555.63	707812.47	FENCE
235	813651.38	707812.00	FENCE

STAKING TABLE

POINT #	NORTHING	EASTING	DESCRIPTION
236	813664.59	707802.57	FENCE
237	813675.55	707787.38	FENCE
238	813675.55	707587.14	FENCE
239	813664.98	707574.45	FENCE
240	813664.99	707558.46	FENCE
241	813539.64	707558.47	FENCE
242	813480.89	707539.35	FENCE
243	813480.89	707529.44	FENCE
244	813529.87	707438.78	EDGE OF ROAD
245	813489.59	707457.45	EDGE OF ROAD
246	813473.18	707498.69	EDGE OF ROAD
247	813473.18	707523.48	EDGE OF ROAD
248	813482.18	707554.23	EDGE OF ROAD
249	813506.34	707575.26	EDGE OF ROAD
250	813530.93	707586.58	EDGE OF ROAD
251	813541.22	707590.02	EDGE OF ROAD
252	813552.02	707591.16	EDGE OF ROAD
253	813593.47	707591.01	EDGE OF ROAD
254	813634.92	707590.87	EDGE OF ROAD
255	813659.75	707601.07	EDGE OF ROAD
256	813670.05	707625.87	EDGE OF ROAD
257	813670.05	707698.93	EDGE OF ROAD
258	813670.05	707772.00	EDGE OF ROAD
259	813659.81	707796.74	EDGE OF ROAD
260	813635.07	707807.00	EDGE OF ROAD
261	813598.73	707807.02	EDGE OF ROAD
262	813562.39	707807.04	EDGE OF ROAD
263	813552.42	707808.05	EDGE OF ROAD
264	813557.38	707807.29	EDGE OF ROAD
265	813483.66	707822.07	EDGE OF ROAD
266	813518.04	707815.06	EDGE OF ROAD
267	813473.67	707823.08	EDGE OF ROAD
268	813478.69	707822.83	EDGE OF ROAD
269	813410.13	707823.08	EDGE OF ROAD
270	813346.60	707823.08	EDGE OF ROAD
271	813341.88	707822.43	EDGE OF ROAD
272	813337.51	707820.54	EDGE OF ROAD
273	813289.00	707791.05	EDGE OF ROAD
274	813239.61	707760.65	EDGE OF ROAD
275	813240.00	707729.25	EDGE OF ROAD
276	813268.72	707728.52	EDGE OF ROAD
277	813300.98	707726.33	EDGE OF ROAD
278	813303.18	707667.39	EDGE OF ROAD
279	813303.18	707613.75	EDGE OF ROAD
280	813310.50	707596.08	EDGE OF ROAD
281	813328.17	707588.76	EDGE OF ROAD
282	813352.99	707588.75	EDGE OF ROAD
283	813388.49	707587.58	EDGE OF ROAD
284	813409.52	707579.17	EDGE OF ROAD
285	813420.34	707574.19	EDGE OF ROAD

STAKING TABLE

POINT #	NORTHING	EASTING	DESCRIPTION
286	813442.81	707554.63	EDGE OF ROAD
287	813451.18	707526.05	EDGE OF ROAD
288	813451.18	707506.08	EDGE OF ROAD
289	813432.56	707462.64	EDGE OF ROAD
290	813388.27	707446.15	EDGE OF ROAD
291	813636.74	707678.57	EDGE OF ROAD
292	813636.74	707650.16	EDGE OF ROAD
293	813626.49	707625.41	EDGE OF ROAD
294	813601.74	707615.16	EDGE OF ROAD
295	813574.16	707615.16	EDGE OF ROAD
296	813546.58	707615.16	EDGE OF ROAD
297	813535.88	707614.00	EDGE OF ROAD
298	813514.83	707605.59	EDGE OF ROAD
299	813503.99	707600.60	EDGE OF ROAD
300	813462.18	707591.44	EDGE OF ROAD
301	813420.36	707600.60	EDGE OF ROAD
302	813413.41	707603.80	EDGE OF ROAD
303	813409.17	707607.49	EDGE OF ROAD
304	813407.59	707613.93	EDGE OF ROAD
305	813385.00	707613.94	EDGE OF ROAD
306	813362.41	707613.94	EDGE OF ROAD
307	813362.42	707643.60	EDGE OF ROAD
308	813362.43	707673.25	EDGE OF ROAD
309	813348.22	707673.25	EDGE OF ROAD
310	813348.26	707705.75	EDGE OF ROAD
311	813348.29	707738.25	EDGE OF ROAD
312	813352.77	707738.25	EDGE OF ROAD
313	813407.59	707618.43	LIMITS OF SIDEWALK
314	813407.59	707614.43	LIMITS OF SIDEWALK
315	813362.91	707614.44	LIMITS OF SIDEWALK
316	813362.93	707673.75	LIMITS OF SIDEWALK
317	813348.73	707673.75	LIMITS OF SIDEWALK
318	813348.79	707737.75	LIMITS OF SIDEWALK
319	813352.77	707737.75	LIMITS OF SIDEWALK
320	813595.54	707572.46	EDGE OF ROAD
321	813594.62	707560.46	EDGE OF ROAD
322	813721.75	707564.85	EDGE OF ROAD
323	813694.06	707574.25	EDGE OF ROAD
324	813719.75	707596.26	EDGE OF ROAD
325	813774.64	707608.76	EDGE OF ROAD
326	813754.81	707619.22	EDGE OF ROAD
327	813739.43	707614.61	EDGE OF ROAD
328	813773.51	707625.20	EDGE OF ROAD
329	813798.71	707631.49	EDGE OF ROAD
330	813799.62	707648.85	EDGE OF ROAD
331	813819.79	707677.69	EDGE OF ROAD
332	813830.81	707672.94	EDGE OF ROAD
333	813838.90	707712.15	EDGE OF ROAD
334	813826.90	707712.15	EDGE OF ROAD
335	813826.90	707756.91	EDGE OF ROAD

STAKING TABLE

POINT #	NORTHING	EASTING	DESCRIPTION
336	813838.90	707796.37	EDGE OF ROAD
337	813822.52	707810.23	EDGE OF ROAD
338	813765.80	707813.76	EDGE OF ROAD
339	813718.02	707813.76	EDGE OF ROAD
340	813718.02	707830.76	EDGE OF ROAD
341	813778.26	707830.76	EDGE OF ROAD
342	813823.81	707841.72	EDGE OF ROAD
343	813840.57	707892.16	EDGE OF ROAD
344	813829.08	707895.61	EDGE OF ROAD
345	813869.84	707939.02	EDGE OF ROAD
346	813878.91	707973.95	EDGE OF ROAD
347	813897.11	707977.90	EDGE OF ROAD
348	813924.27	707983.88	EDGE OF ROAD
349	813947.86	707988.29	EDGE OF ROAD
350	813923.68	708040.42	EDGE OF ROAD
351	813937.86	708028.32	EDGE OF ROAD
352	813952.04	708016.22	EDGE OF ROAD
353	813953.32	708001.75	EDGE OF ROAD
354	813460.34	707777.09	CONTAINMENT PAD
355	813460.34	707797.59	CONTAINMENT PAD
356	813384.34	707797.59	CONTAINMENT PAD
357	813384.34	707777.09	CONTAINMENT PAD
358	813300.71	707586.88	PROPANE TANK
359	813265.71	707586.92	PROPANE TANK
360	813300.71	707606.85	PROPANE TANK
361	813265.71	707606.90	PROPANE TANK
362	813300.64	707626.86	EMERGENCY GENERATOR
363	813260.64	707626.93	EMERGENCY GENERATOR
364	813300.68	707646.85	EMERGENCY GENERATOR
365	813260.68	707646.93	EMERGENCY GENERATOR
366	813300.64	707656.86	EMERGENCY GENERATOR
367	813260.64	707656.93	EMERGENCY GENERATOR
368	813300.68	707676.85	EMERGENCY GENERATOR
369	813260.68	707676.93	EMERGENCY GENERATOR
370	813523.84	707830.81	SANITARY PUMP STATION
372	813343.66	707566.68	RETAINING WALL
373	813268.16	707566.68	RETAINING WALL
374	813249.13	707590.25	RETAINING WALL
375	813249.28	707678.89	RETAINING WALL
376	813233.05	707720.36	RETAINING WALL
377	813543.23	707865.84	OVERFLOW
378	813503.84	707863.11	OVERFLOW
379	813491.66	707852.27	OVERFLOW
380	813482.85	707852.15	OVERFLOW
381	813468.19	707854.83	OVERFLOW
382	813465.56	707870.88	OVERFLOW
383	813468.15	707887.77	OVERFLOW
384	813502.97	707896.07	OVERFLOW
385	813533.48	707900.90	OVERFLOW
386	813543.23	707900.52	OVERFLOW

STAKING TABLE

POINT #	NORTHING	EASTING	DESCRIPTION
387	813543.23	707883.18	OVERFLOW
388	813812.58	707878.20	OVERFLOW
389	813781.89	707887.18	OVERFLOW
390	813781.89	707895.21	OVERFLOW
391	813812.58	707904.21	OVERFLOW
392	813987.14	707940.02	OVERFLOW
393	813965.63	707939.53	OVERFLOW
394	813943.01	707930.53	OVERFLOW
395	813903.95	707910.99	OVERFLOW
396	813897.45	707921.80	OVERFLOW
397	813960.99	707955.66	OVERFLOW
398	813977.63	707966.40	OVERFLOW
399	813950.14	708063.00	OVERFLOW
400	813932.37	708058.67	OVERFLOW
401	813940.31	708078.67	OVERFLOW

WARNING
IT IS A VIOLATION OF SECTION 7209.2 OF THE NEW YORK STATE EDUCATION LAW FOR ANY PERSON, UNLESS ACTING UNDER THE DIRECTION OF A LICENSED PROFESSIONAL ENGINEER, TO ALTER IN ANY WAY PLANS, SPECIFICATIONS, PLATS OR REPORTS TO WHICH THE SEAL OF A PROFESSIONAL ENGINEER HAS BEEN APPLIED. IF AN ITEM BEARING THE SEAL OF A PROFESSIONAL ENGINEER IS ALTERED, THE ALTERING ENGINEER SHALL AFFIX TO THE ITEM HIS SEAL AND THE NOTATION "ALTERED BY" FOLLOWED BY HIS SIGNATURE, THE DATE, AND A SPECIFIC DESCRIPTION OF THE ALTERATION.

REV	ISSUED FOR	DATE	BY

PROJECT ENGINEER: R. FROST
DESIGNED BY: K. ROBBINS
DRAWN BY: K. ROBBINS
CHECKED BY: D. SHEERAN

IF THIS BAR DOES NOT MEASURE 1" THEN DRAWING IS NOT TO FULL SCALE 0 1/2" 1"

BID SET



Hazen
HAZEN AND SAWYER
498 SEVENTH AVENUE, 11th FLOOR
NEW YORK, NEW YORK 10018

WESTCHESTER JOINT WATER WORKS
MAMARONECK, NY

RYE LAKE WATER FILTRATION PLANT
HARRISON, NY

CIVIL
STAKING TABLES

DATE: FEB 2025
HAZEN NO.: 90388-000
CONTRACT NO.: A1364-A
DRAWING NUMBER: C-153

File: C:\USERS\JTANNER\DOCUMENTS\ACCDOCS\HAZEN AND SAWYER\90388-000_RYE_LAKE_FILTRATION\PROJECT FILES\PROJECTWISE\CIVIL\C-153_STAKING Saved by JTANNER Save date: 2/7/2025 1:15 PM
PLOT DATE: 3/26/2025 11:23 PM BY: JTANNER

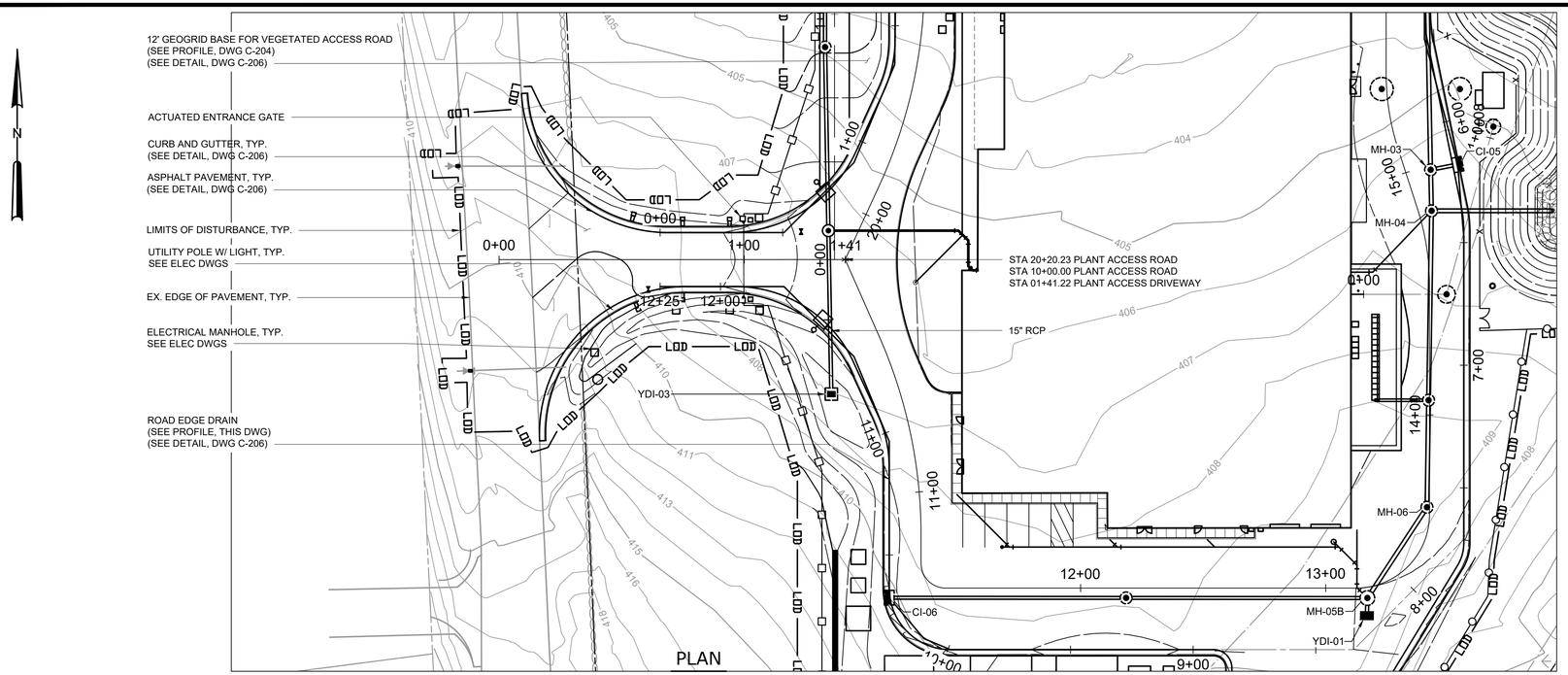

PLAN

SCALE: 1" = 30'

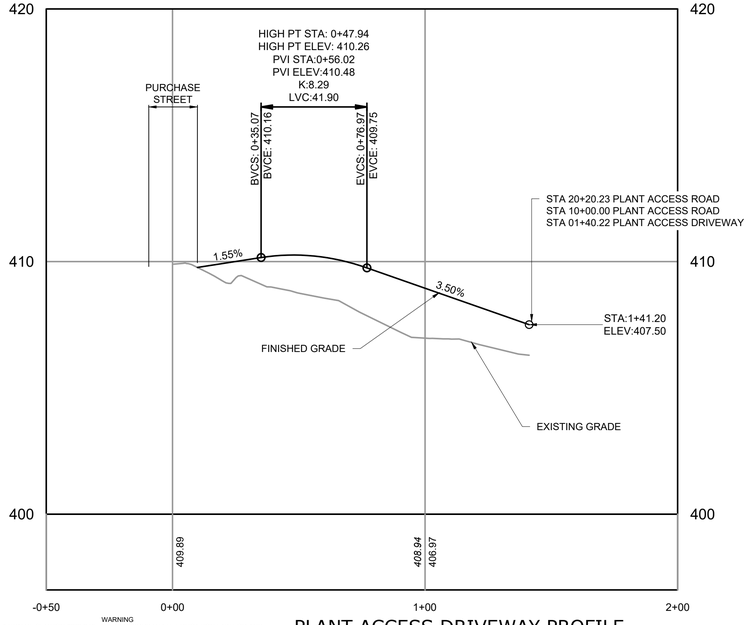

WARNING
IT IS A VIOLATION OF SECTION 7209.2 OF THE NEW YORK STATE EDUCATION LAW FOR ANY PERSON, UNLESS ACTING UNDER THE DIRECTION OF A LICENSED PROFESSIONAL ENGINEER, TO ALTER IN ANY WAY PLANS, SPECIFICATIONS, PLATS OR REPORTS TO WHICH THE SEAL OF A PROFESSIONAL ENGINEER HAS BEEN APPLIED. IF AN ITEM BEARING THE SEAL OF A PROFESSIONAL ENGINEER IS ALTERED, THE ALTERING ENGINEER SHALL AFFIX TO THE ITEM HIS SEAL AND THE NOTATION "ALTERED BY" FOLLOWED BY HIS SIGNATURE, THE DATE, AND A SPECIFIC DESCRIPTION OF THE ALTERATION.

PLANT ACCESS DRIVEWAY PROFILE

HORIZONTAL SCALE: 1" = 30'
VERTICAL SCALE: 1"= 3'

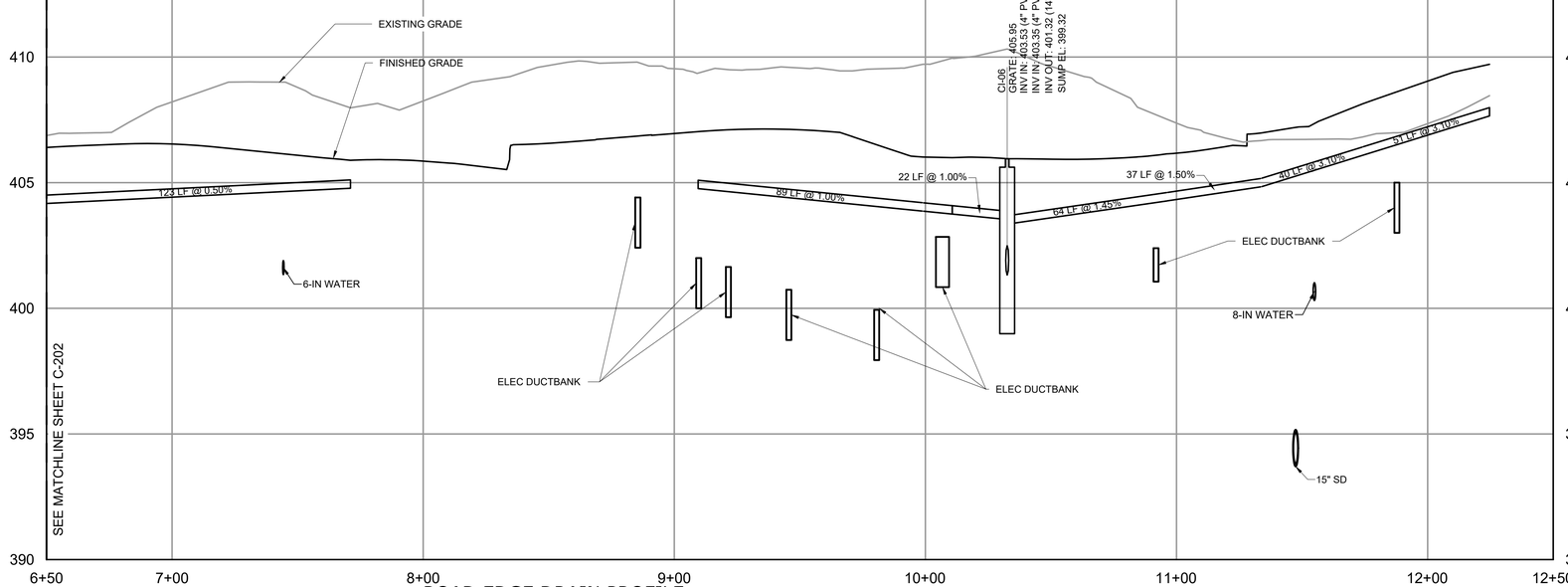

ROAD EDGE DRAIN PROFILE

HORIZONTAL SCALE: 1" = 30'
VERTICAL SCALE: 1"= 3'

NOTES:

1. YARD PIPING NOT SHOWN FOR CLARITY. SEE DWGS C-131 & C-132 FOR BELOW GRADE PIPING AND STRUCTURES.
2. ROAD EDGE DRAINS SHALL CONSIST OF 4" PERFORATED PVC PIPE.

HORIZONTAL SCALE: 1" = 30'

VERTICAL SCALE: 1" = 30'

REV	ISSUED FOR	DATE	BY

PROJECT ENGINEER:	R. FROST
DESIGNED BY:	J. TANNER
DRAWN BY:	J. TANNER
CHECKED BY:	D. SHEERAN

IF THIS BAR DOES NOT MEASURE 1" THEN DRAWING IS NOT TO FULL SCALE (0, 1/2", 1")

BID SET

DANIEL JAMES SHEERAN — STATE OF NEW YORK — 088955 — LICENSED PROFESSIONAL ENGINEER

Hazen

HAZEN AND SAWYER
498 SEVENTH AVENUE, 11th FLOOR
NEW YORK, NEW YORK 10018

WESTCHESTER JOINT WATER WORKS
MAMARONECK, NY

RYE LAKE WATER FILTRATION PLANT
HARRISON, NY

CIVIL
PLANT ACCESS DRIVEWAY PLAN AND PROFILE

DATE:	FEB 2025
HAZEN NO.:	90388-000
CONTRACT NO.:	A1364-A
DRAWING NUMBER:	C-201

File: C:\USERS\JTANNER\DOCUMENTS\ACCDOCS\HAZEN AND SAWYER\90388-000_RYE_LAKE_FILTRATION\PROJECT FILES\PROJECTWISE\CIVIL\LC-201A Saved by JTANNER Save date: 3/27/2025 1:27 PM
PLOT DATE: 3/27/2025 1:27 PM BY: JTANNER

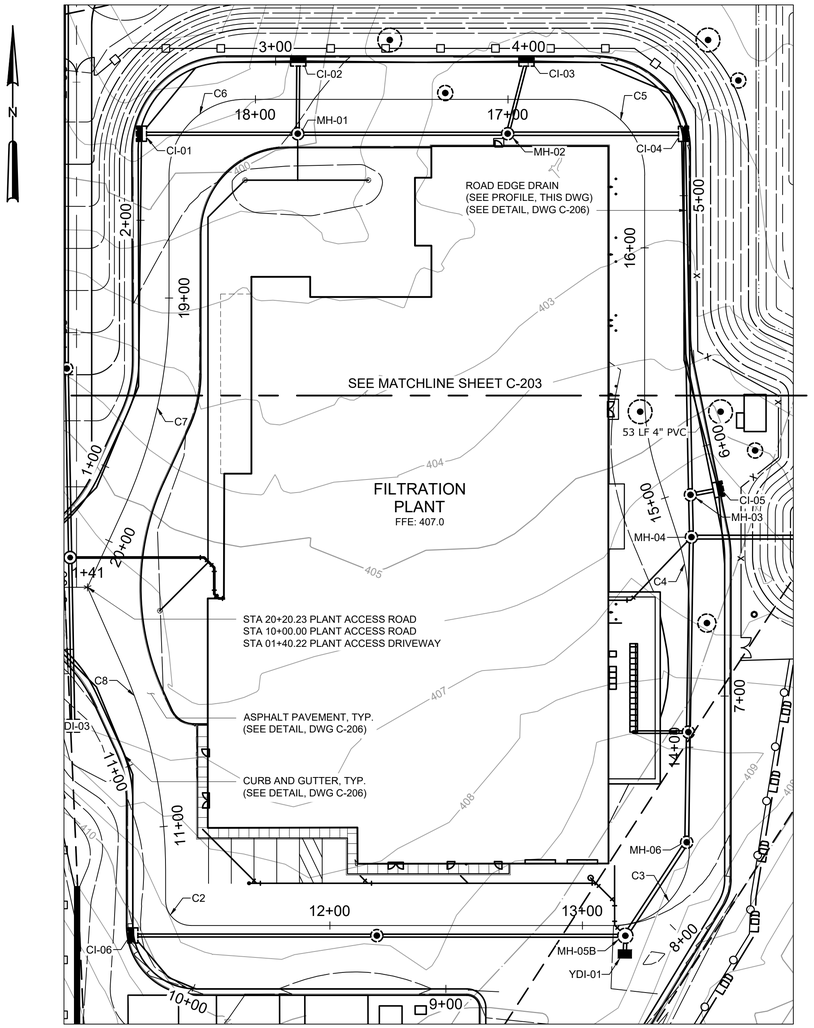

PLAN

SCALE: 1" = 30'

Curve Table: Alignments					
Curve #	Radius	Length	Chord Direction	Start Point	End Point
C2	10.00	15.71	S45° 00' 00.00"E	(707603.15,813339.89)	(707613.15,813329.89)
C3	30.00	47.12	N45° 00' 00.00"E	(707780.50,813329.89)	(707810.50,813359.89)
C4	100.00	31.27	N8° 57' 28.31"W	(707810.50,813453.64)	(707805.65,813484.40)
C5	30.00	47.12	N44° 59' 38.56"W	(707792.83,813626.97)	(707762.84,813656.97)
C6	30.00	47.13	S45° 00' 21.44"W	(707634.52,813657.00)	(707604.51,813627.00)
C7	200.00	86.23	S12° 21' 05.65"W	(707604.51,813577.78)	(707586.21,813494.19)
C8	200.00	83.26	S11° 55' 35.85"E	(707586.06,813432.52)	(707603.15,813351.65)

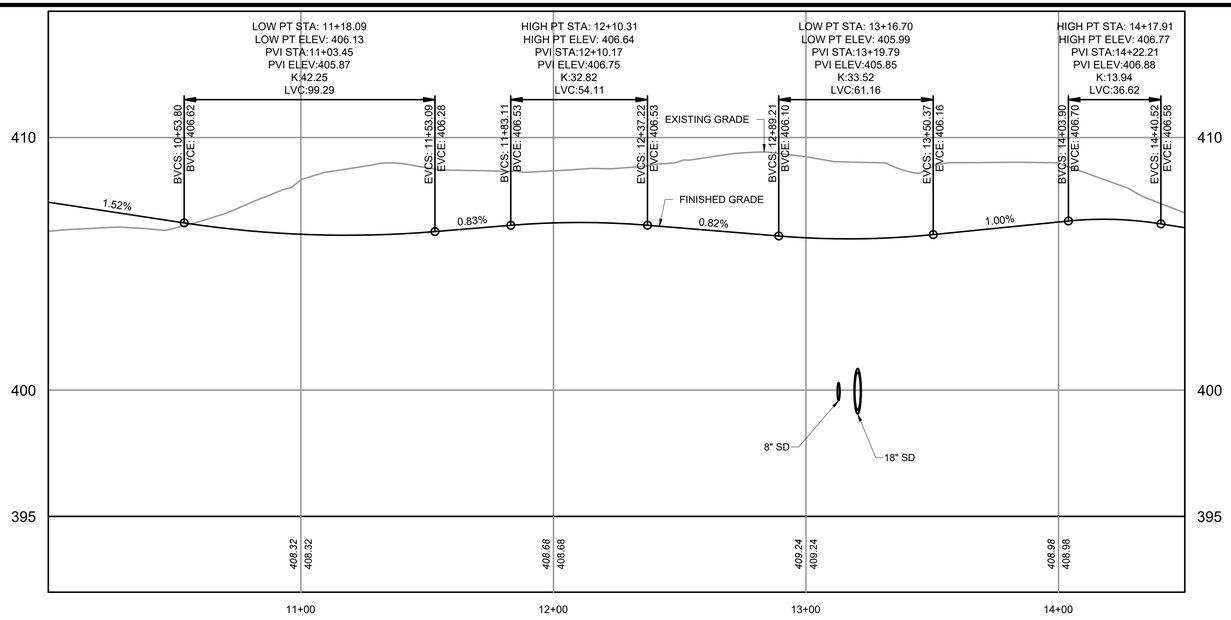

PLANT ACCESS ROAD PROFILE

HORIZONTAL SCALE: 1" = 30'
VERTICAL SCALE: 1"= 3'

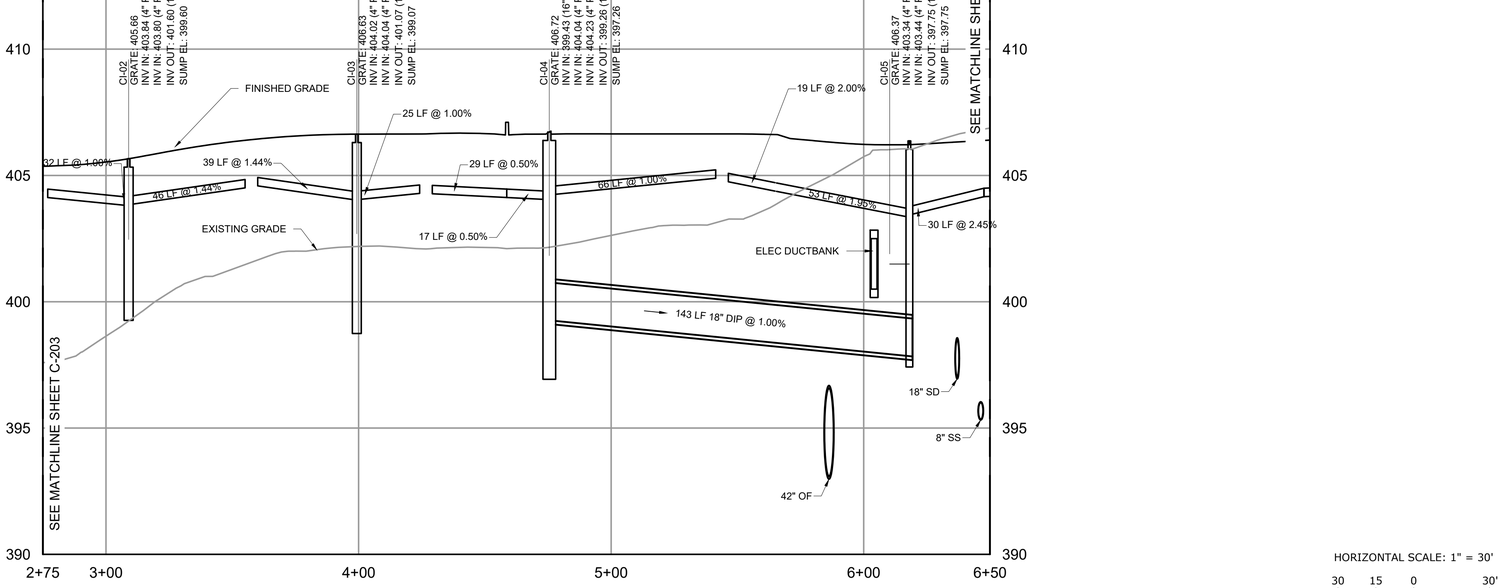

ROAD EDGE DRAIN PROFILE

HORIZONTAL SCALE: 1"=30'
VERTICAL SCALE: 1"= 3'

NOTES:

1. YARD PIPING NOT SHOWN FOR CLARITY. SEE DWGS C-131 & C-132 FOR BELOW GRADE PIPING AND STRUCTURES.
2. ROAD EDGE DRAINS SHALL CONSIST OF 4" PERFORATED PVC PIPE.

HORIZONTAL SCALE: 1" = 30'
30 15 0 30'
3 1.5 0 3
VERTICAL SCALE: 1" = 3'

WARNING
IT IS A VIOLATION OF SECTION 7209.2 OF THE NEW YORK STATE EDUCATION LAW FOR ANY PERSON, UNLESS ACTING UNDER THE DIRECTION OF A LICENSED PROFESSIONAL ENGINEER, TO ALTER IN ANY WAY PLANS, SPECIFICATIONS, PLATS OR REPORTS TO WHICH THE SEAL OF A PROFESSIONAL ENGINEER HAS BEEN APPLIED. IF AN ITEM BEARING THE SEAL OF A PROFESSIONAL ENGINEER IS ALTERED, THE ALTERING ENGINEER SHALL AFFIX TO THE ITEM HIS SEAL AND THE NOTATION "ALTERED BY" FOLLOWED BY HIS SIGNATURE, THE DATE, AND A SPECIFIC DESCRIPTION OF THE ALTERATION.

REV	ISSUED FOR	DATE	BY

PROJECT ENGINEER: R. FROST
DESIGNED BY: J. TANNER
DRAWN BY: J. TANNER
CHECKED BY: D. SHEERAN
IF THIS BAR DOES NOT MEASURE 1" THEN DRAWING IS NOT TO FULL SCALE 0 1/2" 1"

BID SET



Hazen

HAZEN AND SAWYER
498 SEVENTH AVENUE, 11th FLOOR
NEW YORK, NEW YORK 10018

WESTCHESTER JOINT WATER WORKS
MAMARONECK, NY

RYE LAKE WATER FILTRATION PLANT
HARRISON, NY

CIVIL
PLANT ACCESS ROAD PLAN AND PROFILE - STA 10+00 TO STA 14+50

DATE: FEB 2025
HAZEN NO.: 90388-000
CONTRACT NO.: A1364-A
DRAWING NUMBER: C-202

File: C:\USERS\JTANNER\DCACCDOCS\HAZEN AND SAWYER\90388-000_RYE_LAKE_FILTRATION\PROJECT FILES\PROJECTWISE\CIVIL\C-202 Saved by JTANNER Save date: 2/10/2025 9:08 AM
PLOT DATE: 3/27/2025 1:23 PM BY: JTANNER

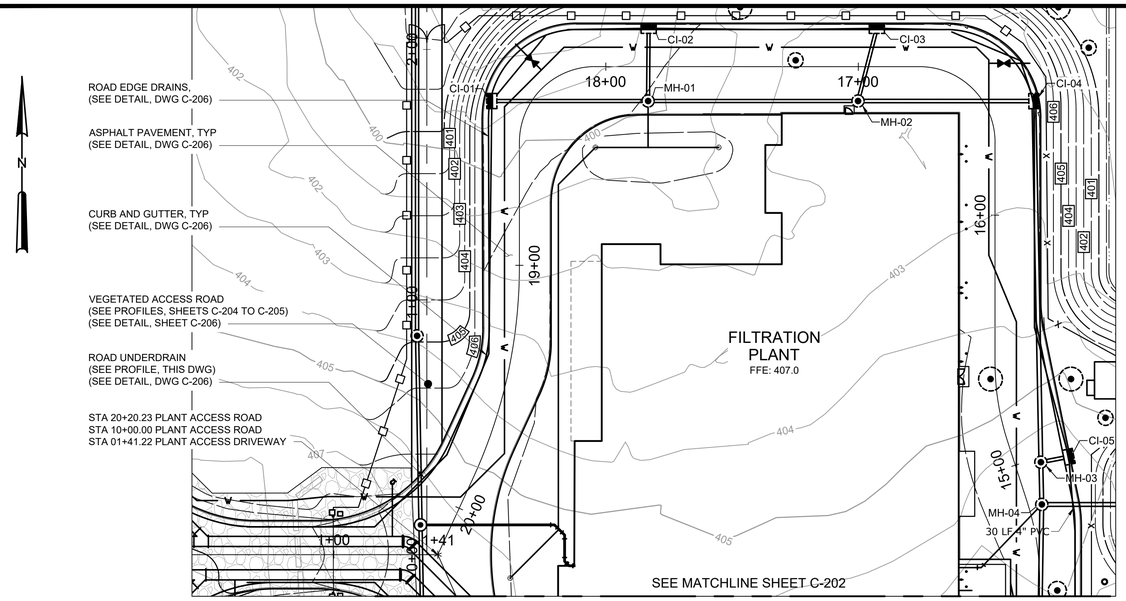

PLAN

SCALE: 1" = 30'

NOTE:

1. YARD PIPING NOT SHOWN FOR CLARITY. SEE DWGS C-131 & C-132 FOR BELOW GRADE PIPING AND STRUCTURES.
2. ROAD EDGE DRAINS SHALL CONSIST OF 4" PERFORATED PVC PIPE.

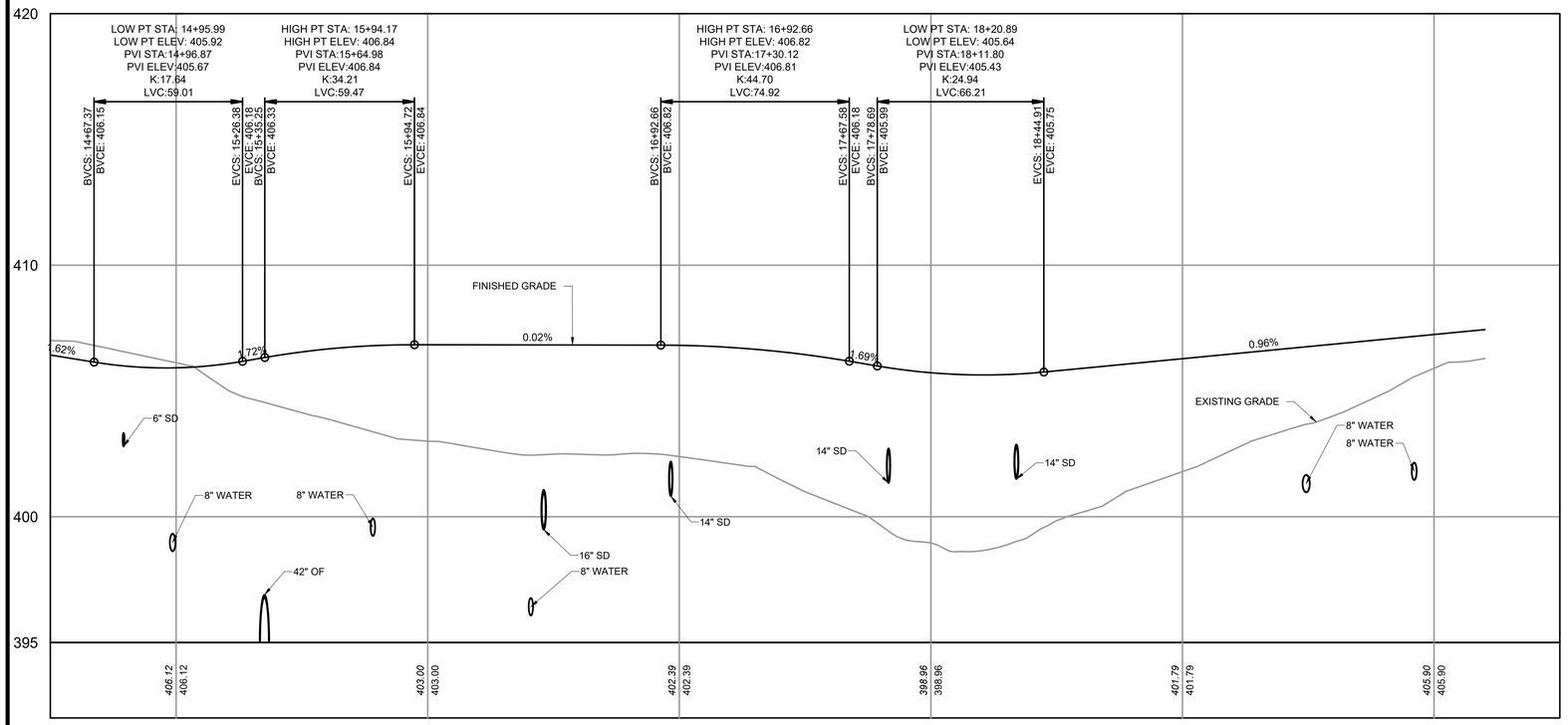

PLANT ACCESS ROAD PROFILE

HORIZONTAL SCALE: 1"=30'
VERTICAL SCALE: 1"= 3'

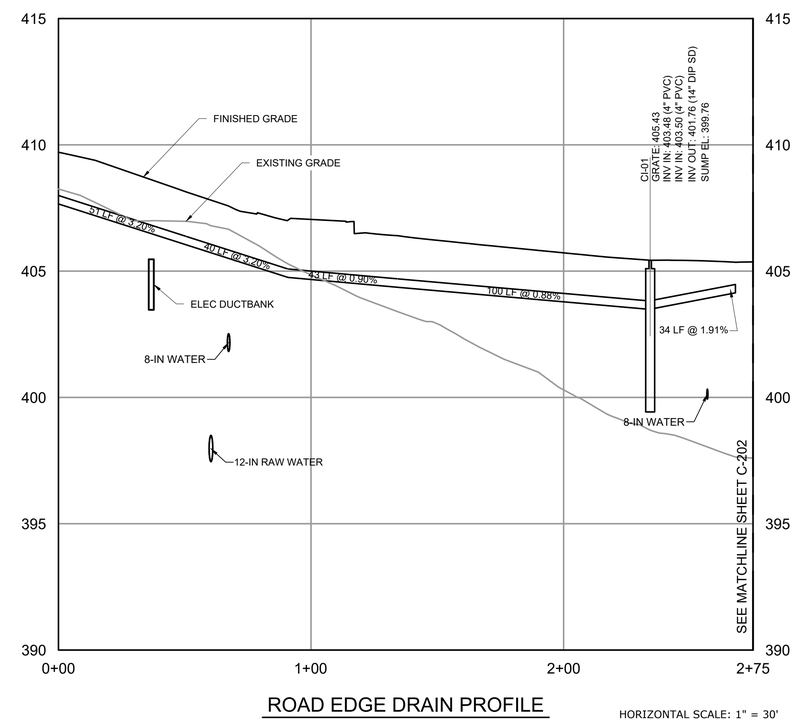

ROAD EDGE DRAIN PROFILE

HORIZONTAL SCALE: 1"=30'
VERTICAL SCALE: 1"= 3'

HORIZONTAL SCALE: 1" = 30'

30 15 0 30'

3 1.5 0 3

VERTICAL SCALE: 1"=3'

WARNING
IT IS A VIOLATION OF SECTION 7209.2 OF THE NEW YORK STATE EDUCATION LAW FOR ANY PERSON, UNLESS ACTING UNDER THE DIRECTION OF A LICENSED PROFESSIONAL ENGINEER, TO ALTER IN ANY WAY PLANS, SPECIFICATIONS, PLATS OR REPORTS TO WHICH THE SEAL OF A PROFESSIONAL ENGINEER HAS BEEN APPLIED. IF AN ITEM BEARING THE SEAL OF A PROFESSIONAL ENGINEER IS ALTERED, THE ALTERING ENGINEER SHALL AFFIX TO THE ITEM HIS SEAL AND THE NOTATION "ALTERED BY" FOLLOWED BY HIS SIGNATURE, THE DATE, AND A SPECIFIC DESCRIPTION OF THE ALTERATION.

REV	ISSUED FOR	DATE	BY

PROJECT ENGINEER: R. FROST
DESIGNED BY: J. TANNER
DRAWN BY: J. TANNER
CHECKED BY: D. SHEERAN
IF THIS BAR DOES NOT MEASURE 1" THEN DRAWING IS NOT TO FULL SCALE 0 1/2" 1"

BID SET

STATE OF NEW YORK · DANIEL JAMES SHEERAN · 088955 · LICENSED PROFESSIONAL ENGINEER

Hazen

HAZEN AND SAWYER
498 SEVENTH AVENUE, 11th FLOOR
NEW YORK, NEW YORK 10018

WESTCHESTER JOINT WATER WORKS
MAMARONECK, NY

RYE LAKE WATER FILTRATION PLANT
HARRISON, NY

CIVIL
PLANT ACCESS ROAD PLAN AND PROFILE - STA 14+50 TO STA 20+20

DATE: FEB 2025
HAZEN NO.: 90388-000
CONTRACT NO.: A1364-A
DRAWING NUMBER: C-203

File: C:\USERS\JTANNER\DCACCDOCS\HAZEN AND SAWYER\90388-000_RYE_LAKE_FILTRATION\PROJECT FILES\PROJECTWISE\CIVIL\C-203 Saved by JTANNER Save date: 3/27/2025 1:21 PM
PLOT DATE: 3/27/2025 1:21 PM BY: JTANNER

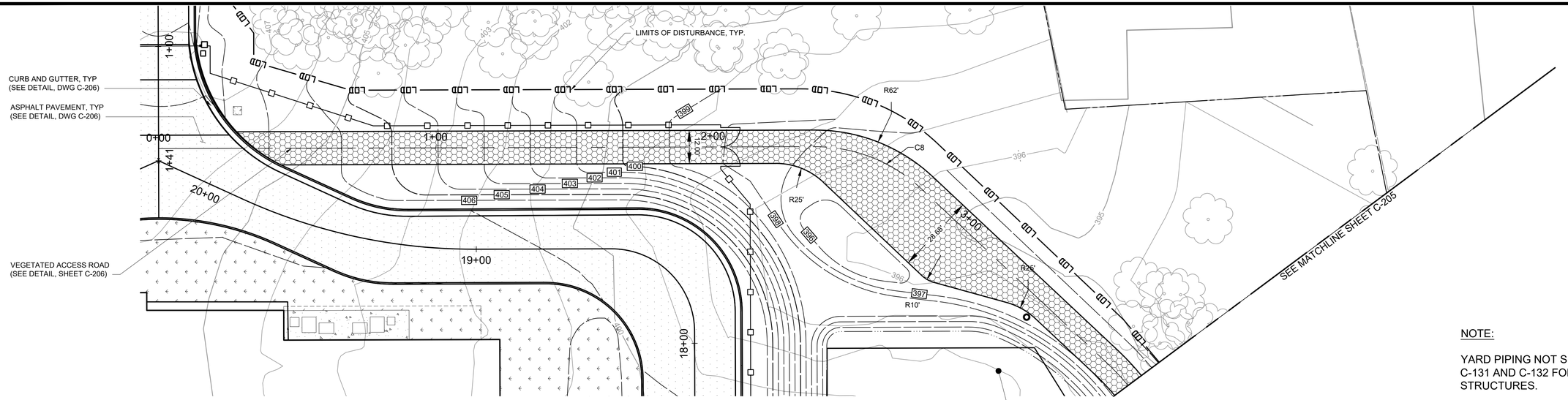

PLAN

SCALE: 1" = 20'

NOTE:

YARD PIPING NOT SHOWN FOR CLARITY. SEE DWGS C-131 AND C-132 FOR BELOW GRADE PIPING AND STRUCTURES.

Curve Table: Alignments					
Curve #	Radius	Length	Chord Direction	Start Point	End Point
C8	56.00	42.38	N21° 40' 49.76"E	(707567.88,813700.48)	(707583.16,813738.93)

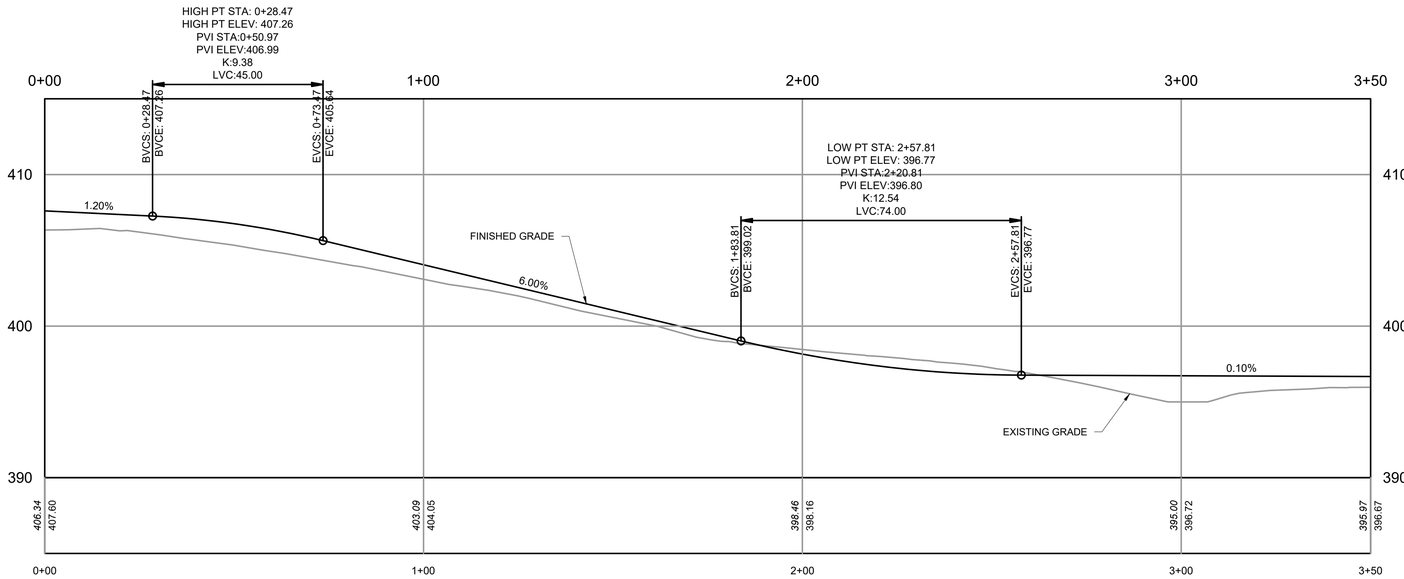

VEGETATED ACCESS ROAD PROFILE

HORIZONTAL SCALE: 1" = 20'
VERTICAL SCALE: 1"=5'

HORIZONTAL SCALE: 1" = 20'

20 10 0 20'

5 0 5

VERTICAL SCALE: 1"=5'

WARNING
IT IS A VIOLATION OF SECTION 7209.2 OF THE NEW YORK STATE EDUCATION LAW FOR ANY PERSON, UNLESS ACTING UNDER THE DIRECTION OF A LICENSED PROFESSIONAL ENGINEER, TO ALTER IN ANY WAY PLANS, SPECIFICATIONS, PLATS OR REPORTS TO WHICH THE SEAL OF A PROFESSIONAL ENGINEER HAS BEEN APPLIED. IF AN ITEM BEARING THE SEAL OF A PROFESSIONAL ENGINEER IS ALTERED, THE ALTERING ENGINEER SHALL AFFIX TO THE ITEM HIS SEAL AND THE NOTATION "ALTERED BY" FOLLOWED BY HIS SIGNATURE, THE DATE, AND A SPECIFIC DESCRIPTION OF THE ALTERATION.

REV	ISSUED FOR	DATE	BY

PROJECT ENGINEER: R. FROST
DESIGNED BY: J. TANNER
DRAWN BY: J. TANNER
CHECKED BY: D. SHEERAN
IF THIS BAR DOES NOT MEASURE 1" THEN DRAWING IS NOT TO FULL SCALE 0 1/2" 1"

BID SET

STATE OF NEW YORK · STEVEN JAMES SHEERAN · 088955 · LICENSED PROFESSIONAL ENGINEER

Hazen

HAZEN AND SAWYER
498 SEVENTH AVENUE, 11th FLOOR
NEW YORK, NEW YORK 10018

WESTCHESTER JOINT WATER WORKS
MAMARONECK, NY

RYE LAKE WATER FILTRATION PLANT
HARRISON, NY

CIVIL
VEGETATED ACCESS ROAD PLAN AND PROFILE - SHEET 1 OF 2

DATE: FEB 2025
HAZEN NO.: 90388-000
CONTRACT NO.: A1364-A
DRAWING NUMBER: C-204

File: C:\USERS\JTANNER\DCACCDOCS\HAZEN AND SAWYER\90388-000_RYE_LAKE_FILTRATION\PROJECT FILES\PROJECTWISE\CIVIL\C-205 Saved by JTANNER Save date: 3/27/2025 1:50 PM
PLOT DATE: 3/27/2025 1:50 PM BY: JTANNER

NOTE:

YARD PIPING NOT SHOWN FOR CLARITY. SEE DWGS C-131 AND C-132 FOR BELOW GRADE PIPING AND STRUCTURES.

Curve Table: Alignments					
Curve #	Radius	Length	Chord Direction	Start Point	End Point
C9	92.65	75.42	N66° 40' 50.44"E	(707646.03,813805.49)	(707713.39,813834.53)
C10	46.90	27.81	N73° 00' 55.75"E	(707882.02,813834.53)	(707908.22,813842.54)

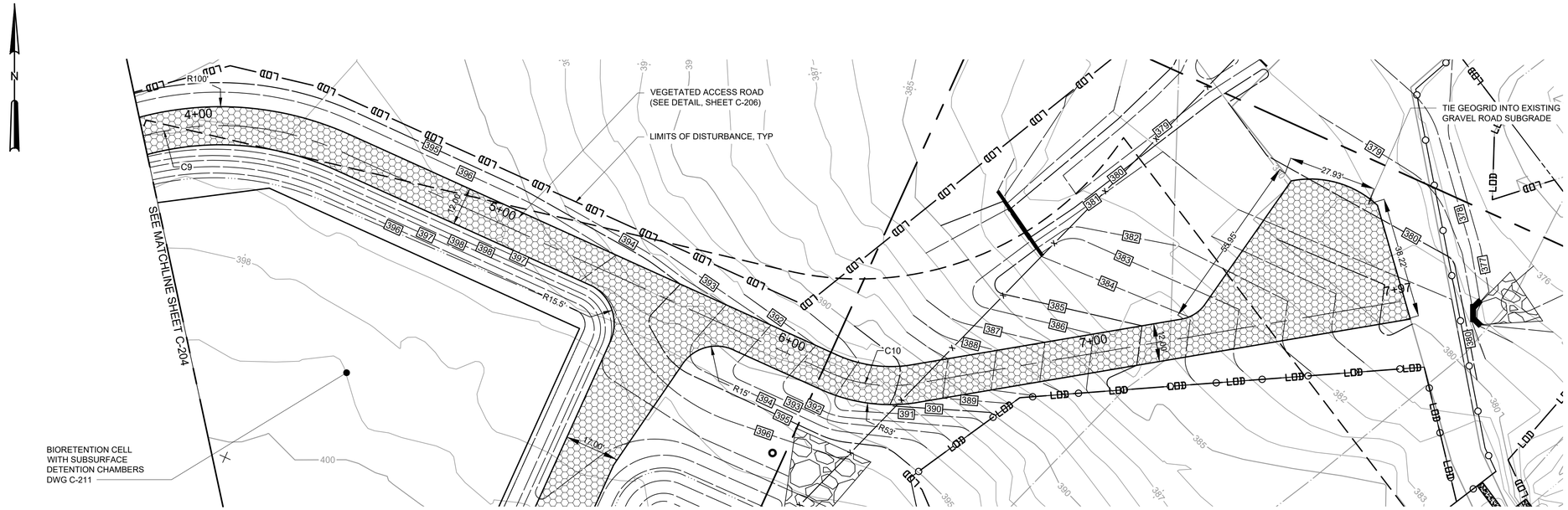

PLAN

SCALE: 1" = 20'

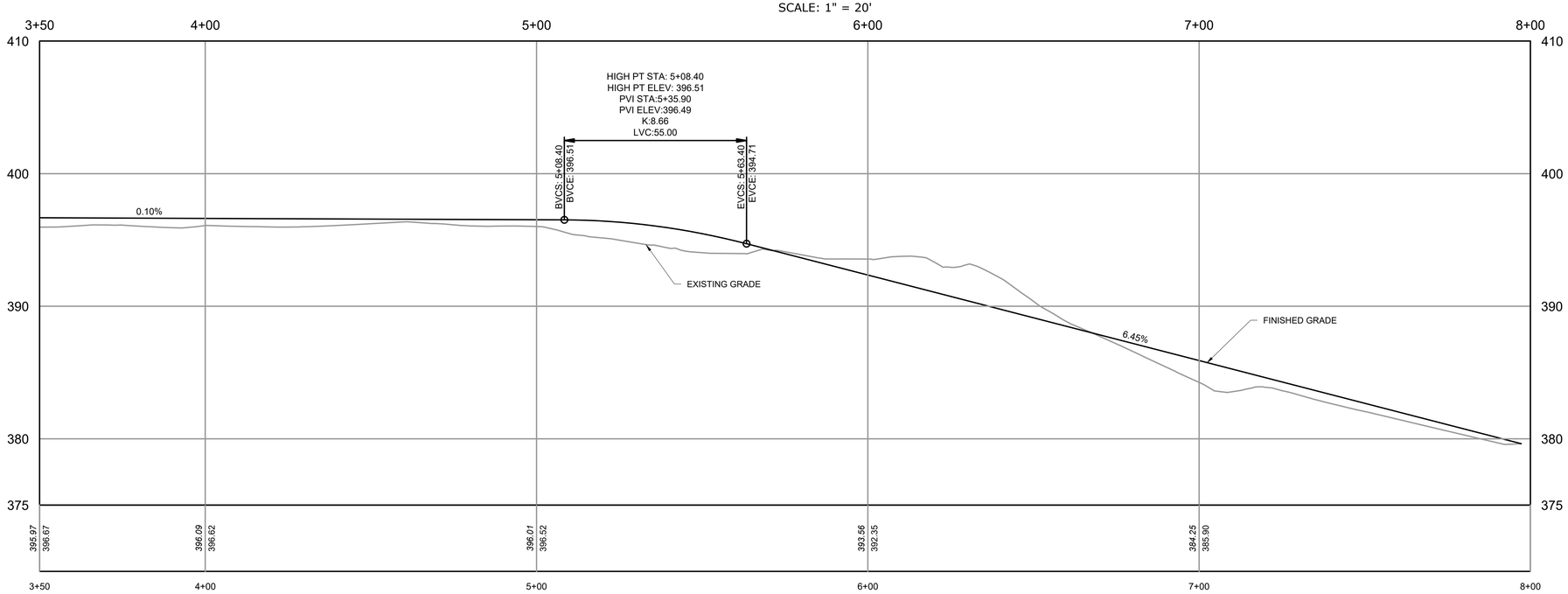

VEGETATED ACCESS ROAD PROFILE

HORIZONTAL SCALE: 1" = 20'
VERTICAL SCALE: 1"=5'

HORIZONTAL SCALE: 1" = 20'

20 10 0 20'

5 0 5

VERTICAL SCALE: 1"=5'

WARNING

IT IS A VIOLATION OF SECTION 7209.2 OF THE NEW YORK STATE EDUCATION LAW FOR ANY PERSON, UNLESS ACTING UNDER THE DIRECTION OF A LICENSED PROFESSIONAL ENGINEER, TO ALTER IN ANY WAY PLANS, SPECIFICATIONS, PLATS OR REPORTS TO WHICH THE SEAL OF A PROFESSIONAL ENGINEER HAS BEEN APPLIED. IF AN ITEM BEARING THE SEAL OF A PROFESSIONAL ENGINEER IS ALTERED, THE ALTERING ENGINEER SHALL AFFIX TO THE ITEM HIS SEAL AND THE NOTATION "ALTERED BY" FOLLOWED BY HIS SIGNATURE, THE DATE, AND A SPECIFIC DESCRIPTION OF THE ALTERATION.

REV	ISSUED FOR	DATE	BY

PROJECT ENGINEER:	R. FROST
DESIGNED BY:	J. TANNER
DRAWN BY:	J. TANNER
CHECKED BY:	D. SHEERAN
IF THIS BAR DOES NOT MEASURE 1" THEN DRAWING IS NOT TO FULL SCALE	0 1/2" 1"

BID SET



Hazen

HAZEN AND SAWYER
498 SEVENTH AVENUE, 11th FLOOR
NEW YORK, NEW YORK 10018

WESTCHESTER JOINT WATER WORKS
MAMARONECK, NY

RYE LAKE WATER FILTRATION PLANT
HARRISON, NY

CIVIL
VEGETATED ACCESS ROAD PLAN AND PROFILE - SHEET 2 OF 2

DATE:	FEB 2025
HAZEN NO.:	90388-000
CONTRACT NO.:	A1364-A
DRAWING NUMBER:	C-205

File: C:\USERS\JTANNER\DC\ACCDOCS\HAZEN AND SAWYER\90388-000_RYE_LAKE_FILTRATION\PROJECT FILES\PROJECTWISE\CIVIL\C-205 Saved by JTANNER Save date: 2/10/2025 9:46 AM
PLOT DATE: 3/27/2025 1:16 PM BY: JTANNER

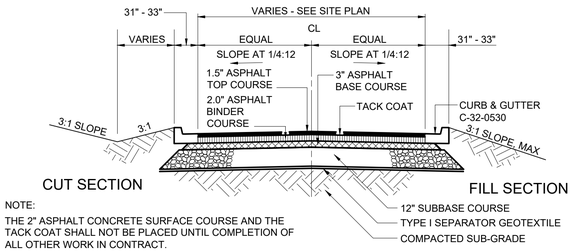

CUT SECTION FILL SECTION

NOTE:
THE 2" ASPHALT CONCRETE SURFACE COURSE AND THE TACK COAT SHALL NOT BE PLACED UNTIL COMPLETION OF ALL OTHER WORK IN CONTRACT.

TYPICAL PLANT ACCESS DRIVEWAY SECTION

C-32-0552

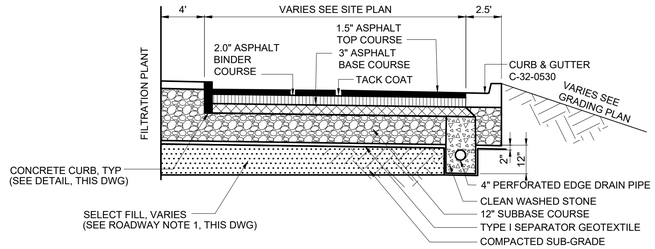

TYPICAL PLANT ACCESS ROAD SECTION WITH SIDEWALK

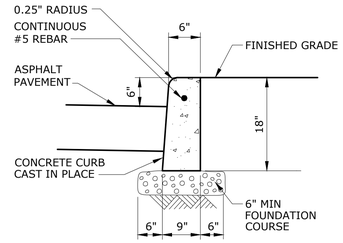

CONCRETE CURB DETAIL

NTS

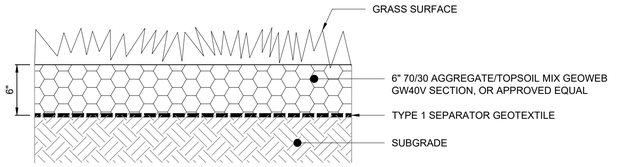

VEGETATED ACCESS ROAD

SCALE: NTS

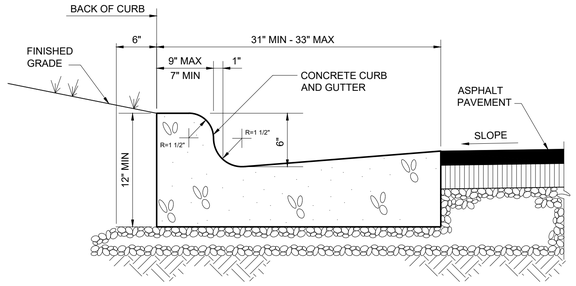

NOTES:
1. CONTRACTION JOINTS SHALL BE PLACED AT 10 FOOT INTERVALS, OR 15 FOOT INTERVALS WHEN A MACHINE IS USED TO PLACE THE CURB.
2. EXPANSION JOINTS SHALL BE PLACED AT 90 FOOT INTERVALS AND ADJACENT TO ALL RIGID OBJECTS.

CURB AND GUTTER

C-32-0530

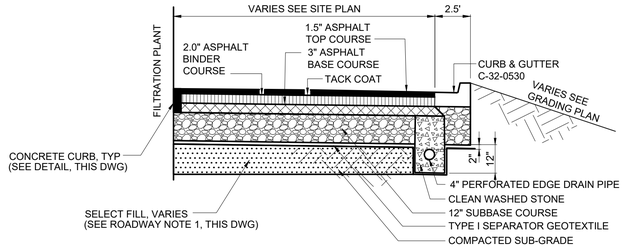

TYPICAL PLANT ACCESS ROAD SECTION WITHOUT SIDEWALK

ROADWAY NOTE:

1. WHERE ROADWAYS ARE REQUIRED TO BE INSTALLED ABOVE EXISTING GRADE, THE CONTRACTOR SHALL PROVIDE SELECT FILL TO ESTABLISH SUBGRADE.

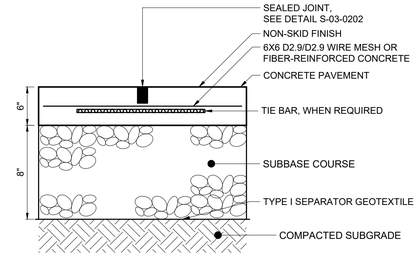

CONCRETE PAVEMENT

C-32-0560

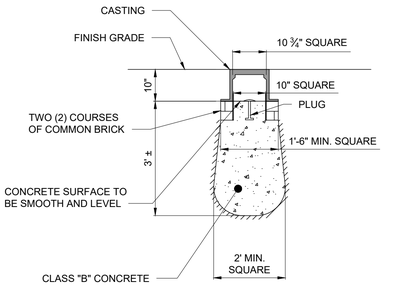

BASELINE

NOTES:

1. UNLESS OTHERWISE SPECIFIED, MONUMENTS ARE TO BE SET BY A SURVEYOR LICENSED BY THE STATE OF NEW YORK IN ACCORDANCE WITH THE SPECIFICATIONS.
2. ALL CONCRETE WILL BE CLASS "B" POURED AGAINST UNDISTURBED MATERIAL.

SURVEY MONUMENTS

N.T.S.

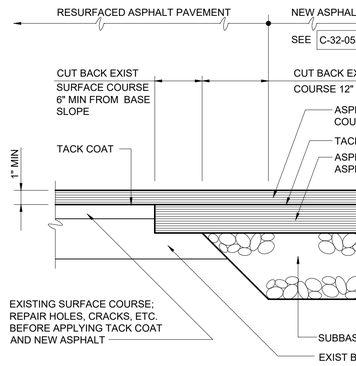

TYPICAL PAVEMENT JUNCTION WITH RESURFACING OF EXISTING PAVEMENT

C-32-0555

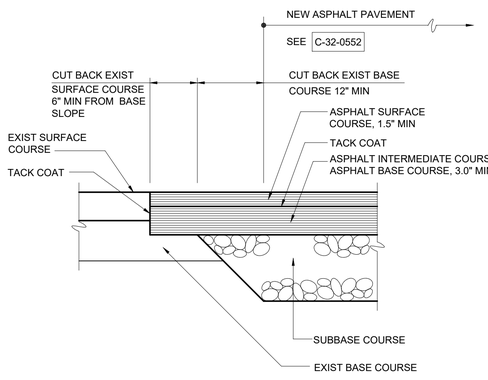

TYPICAL PAVEMENT JUNCTION

C-32-0556

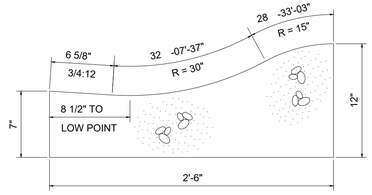

STANDARD 30" ROLLED CURB SECTION

C-32-0531

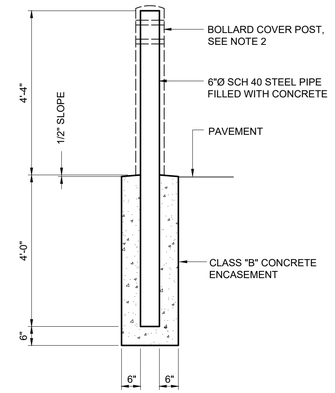

BOLLARD TYPE 1

NOTES:

1. UNLESS OTHERWISE NOTED, ALL BOLLARDS SHALL BE TYPE 1.
2. BOLLARD COVER SHALL BE POST GUARD MODEL CL1386F 7"Øx52" HIGH, YELLOW WITH REFLECTIVE RED STRIPES, OR APPROVED EQUAL AND SECURED TO STEEL PIPE WITH COMPRESSIVE FOAM STRIPS.

WARNING
IT IS A VIOLATION OF SECTION 7209.2 OF THE NEW YORK STATE EDUCATION LAW FOR ANY PERSON, UNLESS ACTING UNDER THE DIRECTION OF A LICENSED PROFESSIONAL ENGINEER, TO ALTER IN ANY WAY PLANS, SPECIFICATIONS, PLATS OR REPORTS TO WHICH THE SEAL OF A PROFESSIONAL ENGINEER HAS BEEN APPLIED. IF AN ITEM BEARING THE SEAL OF A PROFESSIONAL ENGINEER IS ALTERED, THE ALTERING ENGINEER SHALL AFFIX TO THE ITEM HIS SEAL AND THE NOTATION "ALTERED BY" FOLLOWED BY HIS SIGNATURE, THE DATE, AND A SPECIFIC DESCRIPTION OF THE ALTERATION.

REV	ISSUED FOR	DATE	BY

PROJECT ENGINEER:	R. FROST
DESIGNED BY:	J. TANNER
DRAWN BY:	J. TANNER
CHECKED BY:	D. SHEERAN

IF THIS BAR DOES NOT MEASURE 1" THEN DRAWING IS NOT TO FULL SCALE 0 1/2" 1"

BID SET

DANIEL JAMES SHEERAN — NEW YORK — 088955 — LICENSED PROFESSIONAL ENGINEER

Hazen

HAZEN AND SAWYER
498 SEVENTH AVENUE, 11th FLOOR
NEW YORK, NEW YORK 10018

WESTCHESTER JOINT WATER WORKS
MAMARONECK, NY

RYE LAKE WATER FILTRATION PLANT
HARRISON, NY

CIVIL
ROADWAY DETAILS

DATE:	FEB 2025
HAZEN NO.:	90388-000
CONTRACT NO.:	A1364-A
DRAWING NUMBER:	C-206

File: C:\USERS\JTANNER\DCACCDOC\HAZEN AND SAWYER\90388-000_RYE_LAKE_FILTRATION\PROJECT FILES\PROJECTWISE\CIVIL\C-206 Saved by JTANNER Save date: 3/27/2025 11:34 AM
PLOT DATE: 3/27/2025 11:34 AM BY: JTANNER

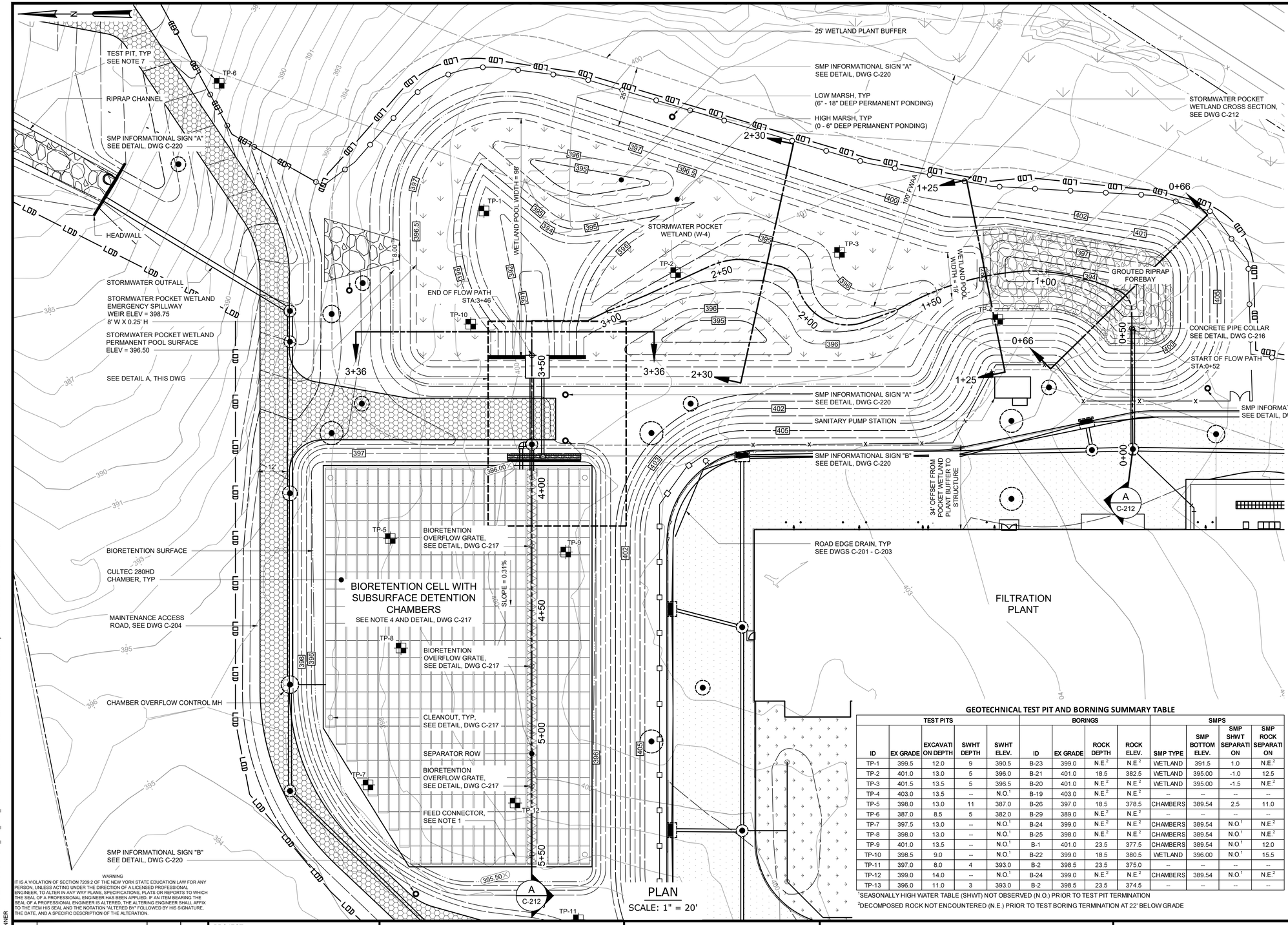

NOTES:

1. FEED CONNECTOR SHALL BE LOCATED ON FIRST AND LAST CHAMBER OF EVERY ROW. SEPARATOR ROW SHALL ONLY HAVE FEED CONNECTOR ON THE LAST CHAMBER OF THE ROW. PROVIDE NON-WOVEN GEOTEXTILE UNDER ALL FEED CONNECTORS FOR SCOUR PROTECTION.
2. NON-WOVEN GEOTEXTILE SHALL BE PLACED BENEATH SEPARATOR ROW CHAMBERS. SEPARATOR ROW CHAMBERS, INCLUDING CHAMBER BOTTOMS, SHALL ALSO BE WRAPPED IN NON-WOVEN GEOTEXTILE.
3. NON-WOVEN GEOTEXTILE SHALL BE PLACED BENEATH AT SEPARATOR ROW BYPASS CHAMBERS FOR SCOUR PROTECTION. GEOTEXTILE SHALL EXTEND TO END OF ROW.
4. CONTRACTOR SHALL PROVIDE 539 CULTEC 280HD CHAMBERS FOR A TOTAL STATIC CHAMBER VOLUME OF 22,936 CF. TOTAL SYSTEM STORAGE INCLUDING SURROUNDING STONE SHALL BE 35,612 CF.
5. MH-11 TO SERVE AS THE SEPARATOR ROW BYPASS MANHOLE FOR LARGER STORM EVENTS. MH-11 SHALL ALSO SERVE AS THE DETENTION SYSTEM ACCESS POINT FOR JET-VAC MAINTENANCE.
6. SEE L-101 AND L-102 FOR BIORETENTION CELL AND STORMWATER POCKET WETLAND PLANTING PLAN.
7. TEST PITS PERFORMED BY GZA GEOENVIRONMENTAL OF NEW YORK TO DETERMINE THE SEASONALLY HIGH WATER TABLE. SEE JANUARY 27, 2022 REPORT ENTITLED "WESTCHESTER JOINT WATER WORKS (WJWW) - PROPOSED FILTRATION PLANT" FOR ADDITIONAL INFORMATION.

GEOTECHNICAL TEST PIT AND BORNING SUMMARY TABLE

TEST PITS					BORINGS				SMPS			
ID	EX GRADE	EXCAVATION DEPTH	SWHT DEPTH	SWHT ELEV.	ID	EX GRADE	ROCK DEPTH	ROCK ELEV.	SMP TYPE	SMP BOTTOM ELEV.	SMP SHWT SEPARATION	SMP ROCK SEPARATION
TP-1	399.5	12.0	9	390.5	B-23	399.0	N.E.[2]	N.E.[2]	WETLAND	391.5	1.0	N.E.[2]
TP-2	401.0	13.0	5	396.0	B-21	401.0	18.5	382.5	WETLAND	395.00	-1.0	12.5
TP-3	401.5	13.5	5	396.5	B-20	401.0	N.E.[2]	N.E.[2]	WETLAND	395.00	-1.5	N.E.[2]
TP-4	403.0	13.5	--	N.O.[1]	B-19	403.0	N.E.[2]	N.E.[2]	--	--	--	--
TP-5	398.0	13.0	11	387.0	B-26	397.0	18.5	378.5	CHAMBERS	389.54	2.5	11.0
TP-6	387.0	8.5	5	382.0	B-29	389.0	N.E.[2]	N.E.[2]	--	--	--	--
TP-7	397.5	13.0	--	N.O.[1]	B-24	399.0	N.E.[2]	N.E.[2]	CHAMBERS	389.54	N.O.[1]	N.E.[2]
TP-8	398.0	13.0	--	N.O.[1]	B-25	398.0	N.E.[2]	N.E.[2]	CHAMBERS	389.54	N.O.[1]	N.E.[2]
TP-9	401.0	13.5	--	N.O.[1]	B-1	401.0	23.5	377.5	CHAMBERS	389.54	N.O.[1]	12.0
TP-10	398.5	9.0	--	N.O.[1]	B-22	399.0	18.5	380.5	WETLAND	396.00	N.O.[1]	15.5
TP-11	397.0	8.0	4	393.0	B-2	398.5	23.5	375.0	--	--	--	--
TP-12	399.0	14.0	--	N.O.[1]	B-24	399.0	N.E.[2]	N.E.[2]	CHAMBERS	389.54	N.O.[1]	N.E.[2]
TP-13	396.0	11.0	3	393.0	B-2	398.5	23.5	374.5	--	--	--	--

[1]SEASONALLY HIGH WATER TABLE (SHWT) NOT OBSERVED (N.O.) PRIOR TO TEST PIT TERMINATION
[2]DECOMPOSED ROCK NOT ENCOUNTERED (N.E.) PRIOR TO TEST BORING TERMINATION AT 22' BELOW GRADE

PLAN
SCALE: 1" = 20'

DETAIL A / C-211
SCALE: 1" = 10'

SCALE: 1" = 10' (10 5 0 10')

SCALE: 1" = 20' (20 10 0 20')

WARNING
IT IS A VIOLATION OF SECTION 7209.2 OF THE NEW YORK STATE EDUCATION LAW FOR ANY PERSON, UNLESS ACTING UNDER THE DIRECTION OF A LICENSED PROFESSIONAL ENGINEER, TO ALTER IN ANY WAY PLANS, SPECIFICATIONS, PLATS OR REPORTS TO WHICH THE SEAL OF A PROFESSIONAL ENGINEER HAS BEEN APPLIED. IF AN ITEM BEARING THE SEAL OF A PROFESSIONAL ENGINEER IS ALTERED, THE ALTERING ENGINEER SHALL AFFIX TO THE ITEM HIS SEAL AND THE NOTATION "ALTERED BY" FOLLOWED BY HIS SIGNATURE, THE DATE, AND A SPECIFIC DESCRIPTION OF THE ALTERATION.

REV	ISSUED FOR	DATE	BY

PROJECT ENGINEER: R. FROST
DESIGNED BY: C. MCNICOL
DRAWN BY: C. MCNICOL
CHECKED BY: D. SHEERAN
IF THIS BAR DOES NOT MEASURE 1" THEN DRAWING IS NOT TO FULL SCALE 0 1/2" 1"

BID SET

STATE OF NEW YORK · DANIEL JAMES SHEERAN · 088955 · LICENSED PROFESSIONAL ENGINEER

Hazen
HAZEN AND SAWYER
498 SEVENTH AVENUE, 11th FLOOR
NEW YORK, NEW YORK 10018

WESTCHESTER JOINT WATER WORKS
MAMARONECK, NY

RYE LAKE WATER FILTRATION PLANT
HARRISON, NY

CIVIL
STORMWATER MANAGEMENT PLAN

DATE: FEB 2025
HAZEN NO.: 90388-000
CONTRACT NO.: A1364-A
DRAWING NUMBER: C-211

File: C:\USERS\JTANNER\DOCACCDOCS\HAZEN AND SAWYER\90388-000_RYE_LAKE_FILTRATION\PROJECT FILES\PROJECTWISE\CIVIL\C-211 Saved by JTANNER Save date: 2/10/2025 9:24 AM
PLOT DATE: 3/27/2025 1:06 PM BY: JTANNER

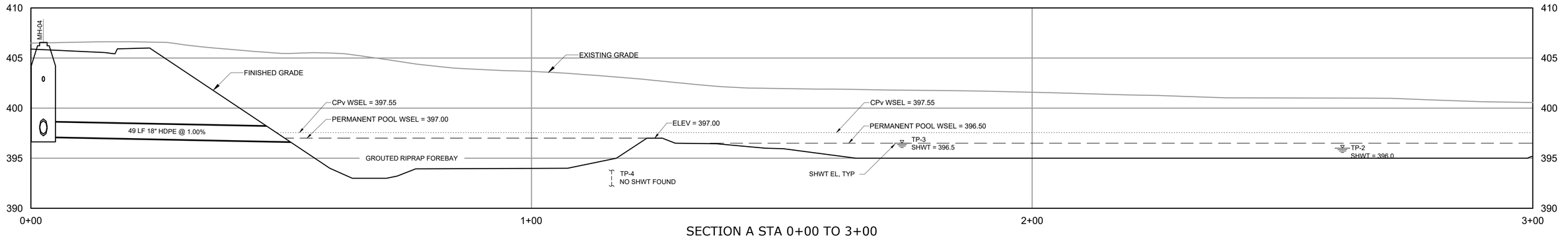

SECTION A STA 0+00 TO 3+00

HORIZONTAL SCALE: 1" = 10'
VERTICAL SCALE: 1"=5'

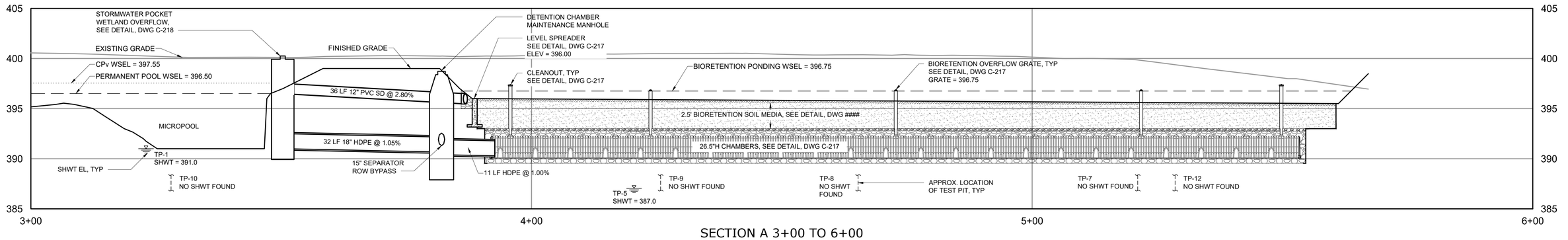

SECTION A 3+00 TO 6+00

HORIZONTAL SCALE: 1" = 10'
VERTICAL SCALE: 1"=5'

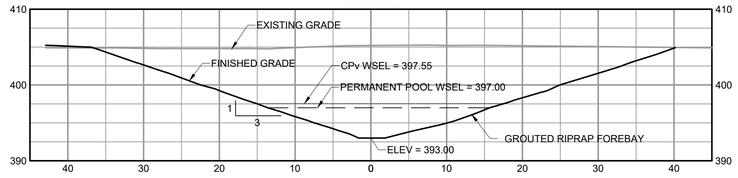

SECTION 0+63

HORIZONTAL SCALE: 1" = 10'
VERTICAL SCALE: 1"= 10'

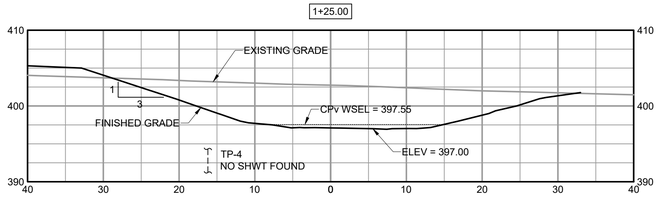

SECTION 1+17

HORIZONTAL SCALE: 1" = 10'
VERTICAL SCALE: 1"=10'

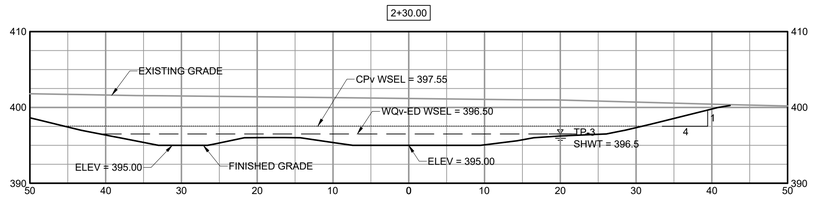

SECTION 2+15

HORIZONTAL SCALE: 1" = 10'
VERTICAL SCALE: 1"= 10'

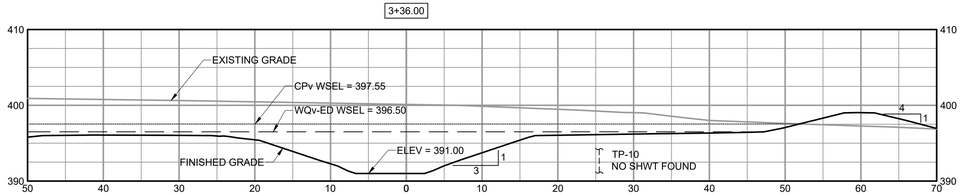

SECTION 3+31

HORIZONTAL SCALE: 1" = 10'
VERTICAL SCALE: 1"=10'

HORIZONTAL SCALE: 1" = 10'
10 5 0 10'
5 0 5
VERTICAL SCALE: 1"=5'

WARNING
IT IS A VIOLATION OF SECTION 7209.2 OF THE NEW YORK STATE EDUCATION LAW FOR ANY PERSON, UNLESS ACTING UNDER THE DIRECTION OF A LICENSED PROFESSIONAL ENGINEER, TO ALTER IN ANY WAY PLANS, SPECIFICATIONS, PLATS OR REPORTS TO WHICH THE SEAL OF A PROFESSIONAL ENGINEER HAS BEEN APPLIED. IF AN ITEM BEARING THE SEAL OF A PROFESSIONAL ENGINEER IS ALTERED, THE ALTERING ENGINEER SHALL AFFIX TO THE ITEM HIS SEAL AND THE NOTATION "ALTERED BY" FOLLOWED BY HIS SIGNATURE, THE DATE, AND A SPECIFIC DESCRIPTION OF THE ALTERATION.

REV	ISSUED FOR	DATE	BY

PROJECT ENGINEER:	R. FROST
DESIGNED BY:	C. MCNICOL
DRAWN BY:	C. MCNICOL
CHECKED BY:	D. SHEERAN

IF THIS BAR DOES NOT MEASURE 1" THEN DRAWING IS NOT TO FULL SCALE — 0 1/2" 1"

BID SET

STATE OF NEW YORK — PETER JAMES SHEA — 088955 — LICENSED PROFESSIONAL ENGINEER

Hazen

HAZEN AND SAWYER
498 SEVENTH AVENUE, 11th FLOOR
NEW YORK, NEW YORK 10018

WESTCHESTER JOINT WATER WORKS
MAMARONECK, NY

RYE LAKE WATER FILTRATION PLANT
HARRISON, NY

CIVIL
STORMWATER MANAGEMENT
CROSS SECTIONS

DATE:	FEB 2025
HAZEN NO.:	90388-000
CONTRACT NO.:	A1364-A
DRAWING NUMBER:	C-212

File: C:\USERS\JTANNER\DC\ACCDOCS\HAZEN AND SAWYER\90388-000_RYE_LAKE_FILTRATION\PROJECT FILES\PROJECTWISE\CIVIL\C-212 Saved by CMCNICOL Save date: 2/3/2025 4:31 PM
PLOT DATE: 3/26/2025 11:34 PM BY: JTANNER

NOTES:

1. ALL STORM DRAINS SHALL HAVE A MINIMUM COVER OF 4' UNLESS SHOWN OTHERWISE.

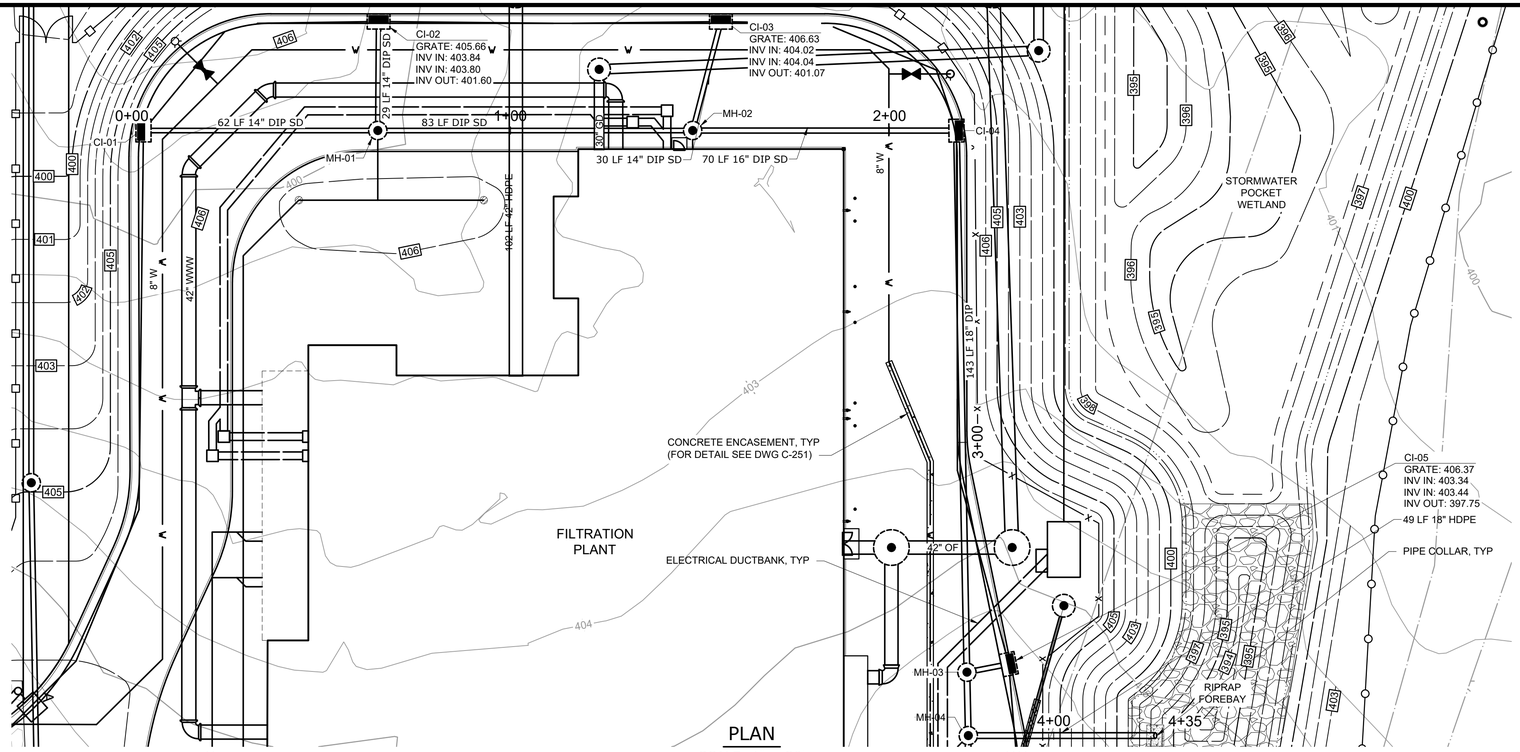

PLAN

SCALE: 1" = 20'

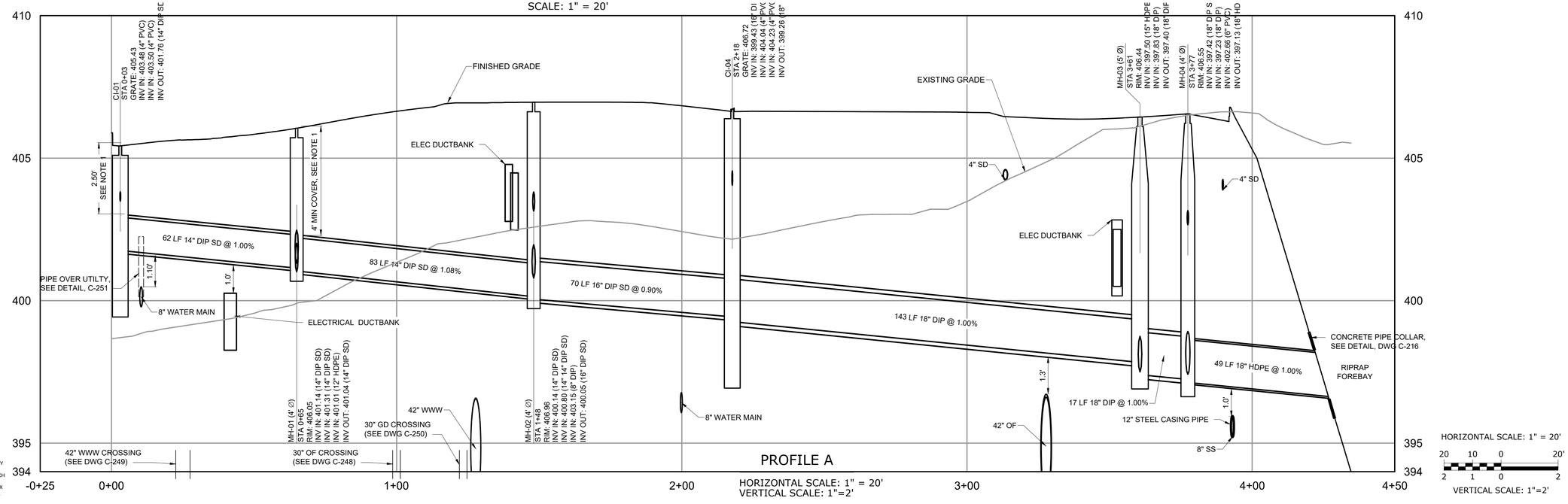

PROFILE A

HORIZONTAL SCALE: 1" = 20'
VERTICAL SCALE: 1"=2'

HORIZONTAL SCALE: 1" = 20'
20 10 0 20'
2 1 0 2
VERTICAL SCALE: 1"=2'

WARNING
IT IS A VIOLATION OF SECTION 7209.2 OF THE NEW YORK STATE EDUCATION LAW FOR ANY PERSON, UNLESS ACTING UNDER THE DIRECTION OF A LICENSED PROFESSIONAL ENGINEER, TO ALTER IN ANY WAY PLANS, SPECIFICATIONS, PLATS OR REPORTS TO WHICH THE SEAL OF A PROFESSIONAL ENGINEER HAS BEEN APPLIED. IF AN ITEM BEARING THE SEAL OF A PROFESSIONAL ENGINEER IS ALTERED, THE ALTERING ENGINEER SHALL AFFIX TO THE ITEM HIS SEAL AND THE NOTATION "ALTERED BY" FOLLOWED BY HIS SIGNATURE, THE DATE, AND A SPECIFIC DESCRIPTION OF THE ALTERATION.

REV	ISSUED FOR	DATE	BY

PROJECT ENGINEER:	R. FROST
DESIGNED BY:	C. MCNICOL
DRAWN BY:	C. MCNICOL
CHECKED BY:	D. SHEERAN

IF THIS BAR DOES NOT MEASURE 1" THEN DRAWING IS NOT TO FULL SCALE 0 1/2" 1"

BID SET

STATE OF NEW YORK DANIEL JAMES SHEERAN 088955 LICENSED PROFESSIONAL ENGINEER

Hazen

HAZEN AND SAWYER
498 SEVENTH AVENUE, 11th FLOOR
NEW YORK, NEW YORK 10018

WESTCHESTER JOINT WATER WORKS
MAMARONECK, NY

RYE LAKE WATER FILTRATION PLANT
HARRISON, NY

CIVIL
STORMWATER DRAINAGE PROFILES - SHEET 1 OF 3

DATE:	FEB 2025
HAZEN NO.:	90388-000
CONTRACT NO.:	A1364-A
DRAWING NUMBER:	C-213

File: C:\USERS\JTANNER\DOCUMENTS\HAZEN AND SAWYER\90388-000_RYE_LAKE_FILTRATION\PROJECT FILES\PROJECTWISE\CIVIL\C-213 Saved by JTANNER Save date: 2/10/2025 9:28 AM
PLOT DATE: 2/26/2025 11:34 PM BY: JTANNER

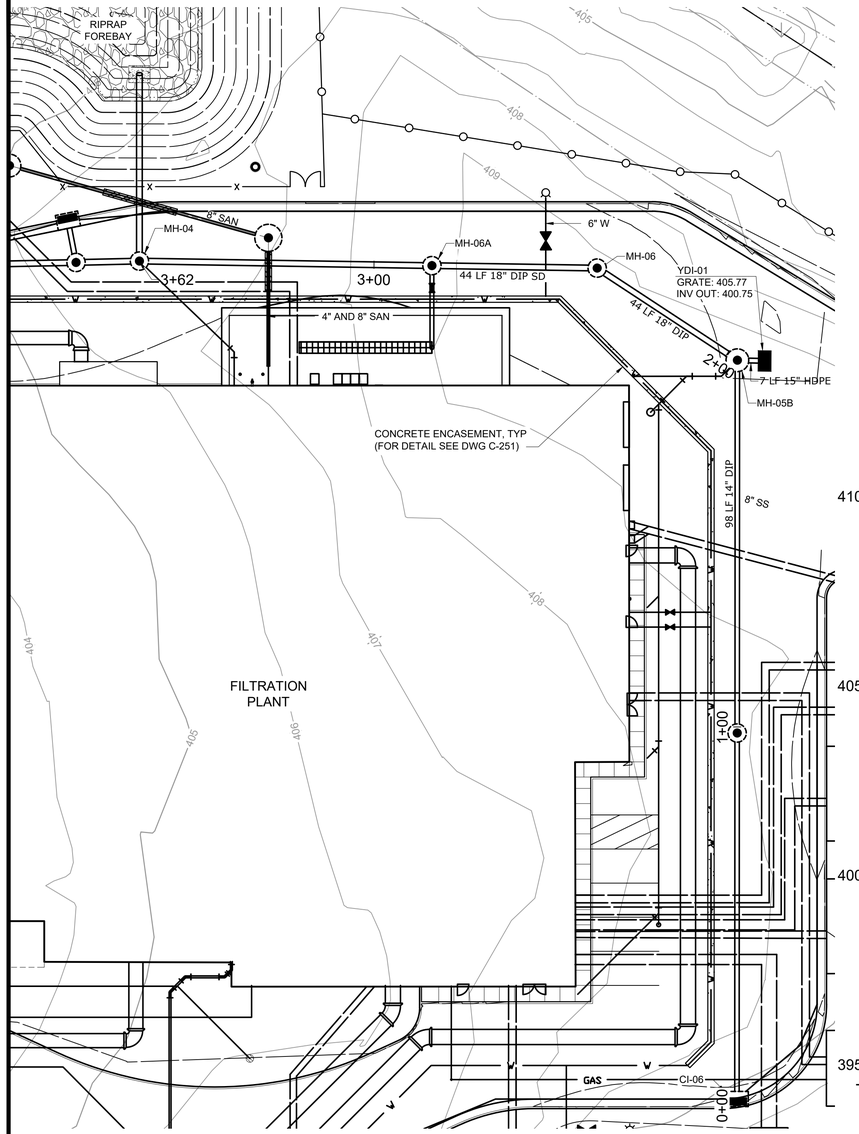

PLAN

SCALE: 1" = 20'

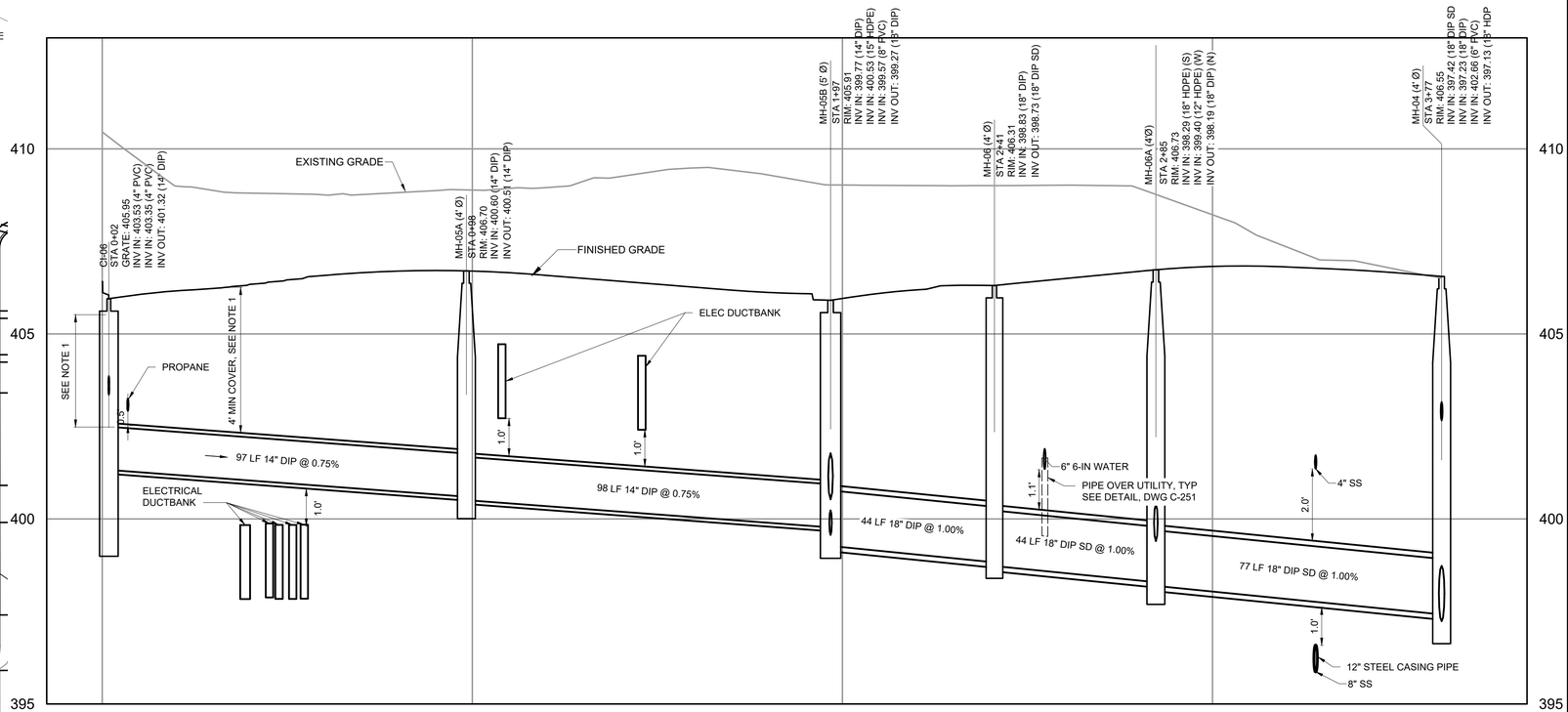

PROFILE B

HORIZONTAL SCALE: 1" = 20'
VERTICAL SCALE: 1"=2'

NOTES:

1. ALL STORM DRAINS SHALL HAVE A MINIMUM COVER OF 4' UNLESS SHOWN OTHERWISE.
2. CONTRACTOR SHALL LEAKAGE TEST ALL DIP STORM PIPING TO A TEST PRESSURE OF 50 PSI MINIMUM.

HORIZONTAL SCALE: 1" = 20'
20 10 0 20'
VERTICAL SCALE: 1"=2'
2 1 0 2

WARNING
IT IS A VIOLATION OF SECTION 7209.2 OF THE NEW YORK STATE EDUCATION LAW FOR ANY PERSON, UNLESS ACTING UNDER THE DIRECTION OF A LICENSED PROFESSIONAL ENGINEER, TO ALTER IN ANY WAY PLANS, SPECIFICATIONS, PLATS OR REPORTS TO WHICH THE SEAL OF A PROFESSIONAL ENGINEER HAS BEEN APPLIED. IF AN ITEM BEARING THE SEAL OF A PROFESSIONAL ENGINEER IS ALTERED, THE ALTERING ENGINEER SHALL AFFIX TO THE ITEM HIS SEAL AND THE NOTATION "ALTERED BY" FOLLOWED BY HIS SIGNATURE, THE DATE, AND A SPECIFIC DESCRIPTION OF THE ALTERATION.

REV	ISSUED FOR	DATE	BY

PROJECT ENGINEER:	R. FROST
DESIGNED BY:	C. MCNICOL
DRAWN BY:	C. MCNICOL
CHECKED BY:	D. SHEERAN
IF THIS BAR DOES NOT MEASURE 1" THEN DRAWING IS NOT TO FULL SCALE	0 1/2" 1"

BID SET



Hazen
HAZEN AND SAWYER
498 SEVENTH AVENUE, 11th FLOOR
NEW YORK, NEW YORK 10018

WESTCHESTER JOINT WATER WORKS
MAMARONECK, NY

RYE LAKE WATER FILTRATION PLANT
HARRISON, NY

CIVIL
STORMWATER DRAINAGE PROFILES - SHEET 2 OF 3

DATE:	FEB 2025
HAZEN NO.:	90388-000
CONTRACT NO.:	A1364-A
DRAWING NUMBER:	C-214

File: C:\USERS\JTANNER\DOCUMENTS\HAZEN AND SAWYER\90388-000_RYE_LAKE_FILTRATION\PROJECT FILES\PROJECTWISE\CIVIL\C-214 Saved by JTANNER Save date: 2/10/2025 9:30 AM
PLOT DATE: 3/27/2025 12:58 PM BY: JTANNER

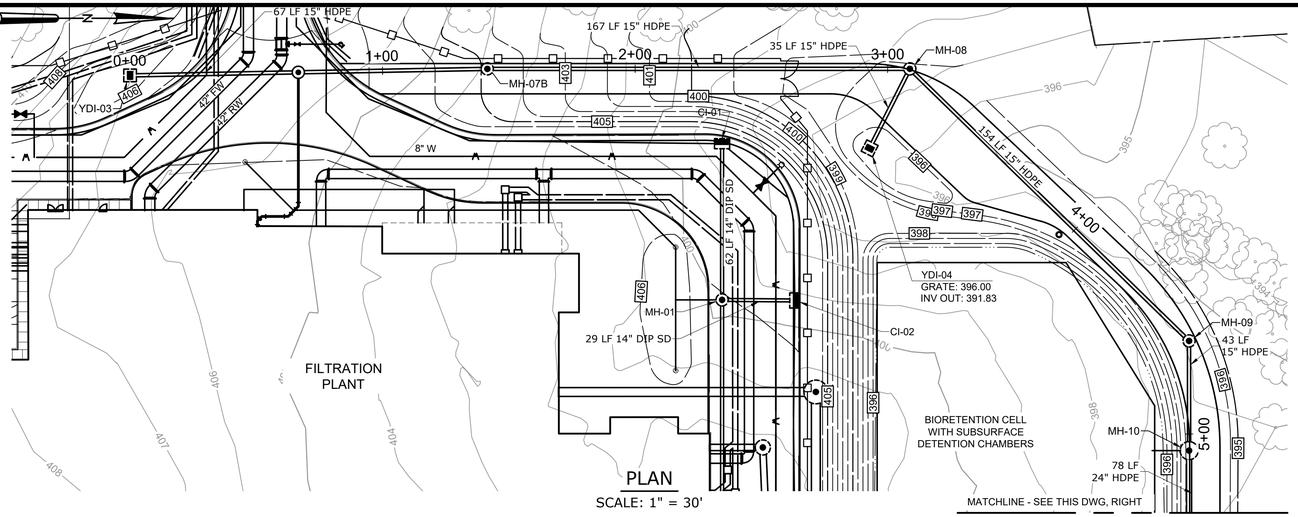

PLAN

SCALE: 1" = 30'

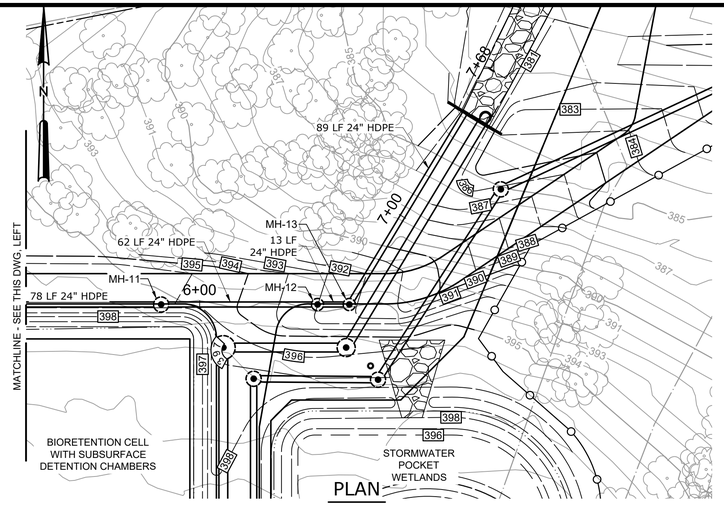

PLAN

SCALE: 1" = 30'

NOTES:

1. ALL STORM DRAINS SHALL HAVE A MINIMUM COVER OF 4' UNLESS SHOWN OTHERWISE.

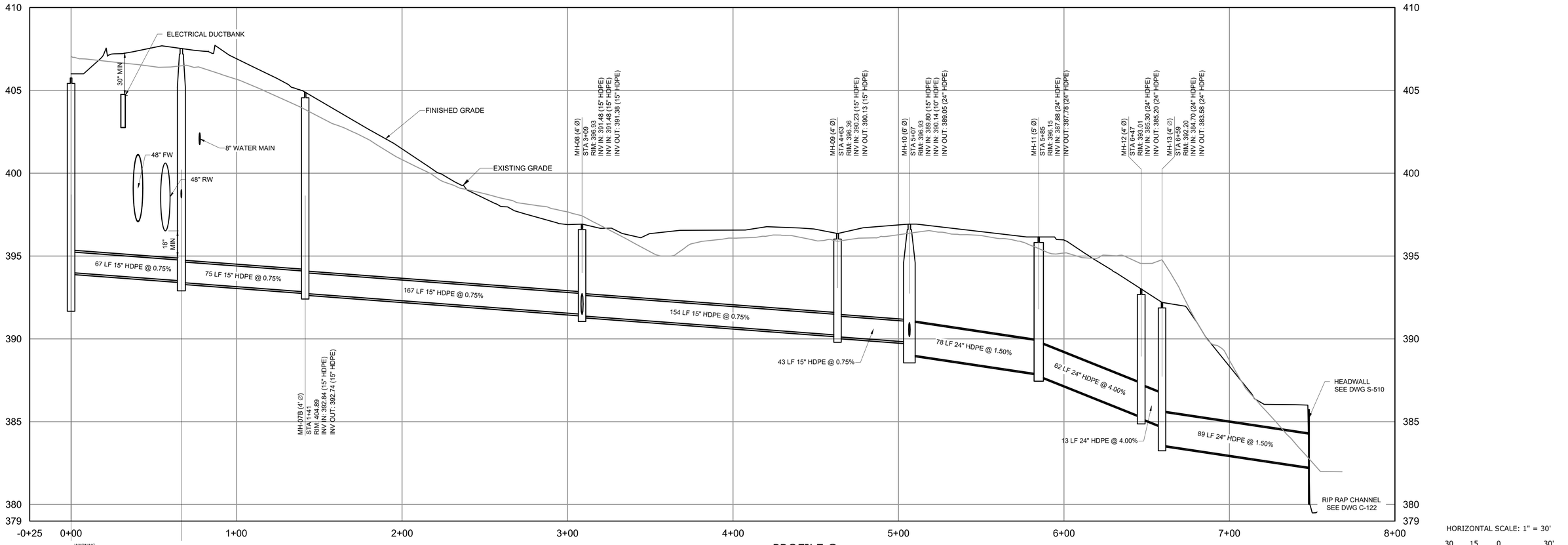

PROFILE C

HORIZONTAL SCALE: 1" = 30'
VERTICAL SCALE: 1"= 3'

HORIZONTAL SCALE: 1" = 30'

30 15 0 30'

VERTICAL SCALE: 1"=3'

WARNING
IT IS A VIOLATION OF SECTION 7209.2 OF THE NEW YORK STATE EDUCATION LAW FOR ANY PERSON, UNLESS ACTING UNDER THE DIRECTION OF A LICENSED PROFESSIONAL ENGINEER, TO ALTER IN ANY WAY PLANS, SPECIFICATIONS, PLATS OR REPORTS TO WHICH THE SEAL OF A PROFESSIONAL ENGINEER HAS BEEN APPLIED. IF AN ITEM BEARING THE SEAL OF A PROFESSIONAL ENGINEER IS ALTERED, THE ALTERING ENGINEER SHALL AFFIX TO THE ITEM HIS SEAL AND THE NOTATION "ALTERED BY" FOLLOWED BY HIS SIGNATURE, THE DATE, AND A SPECIFIC DESCRIPTION OF THE ALTERATION.

REV	ISSUED FOR	DATE	BY

PROJECT ENGINEER:	R. FROST
DESIGNED BY:	C. MCNICOL
DRAWN BY:	C. MCNICOL
CHECKED BY:	D. SHEERAN

IF THIS BAR DOES NOT MEASURE 1" THEN DRAWING IS NOT TO FULL SCALE 0 1/2" 1"

BID SET

STATE OF NEW YORK — JAMES SHEET — 088955 — REGISTERED PROFESSIONAL ENGINEER

Hazen

HAZEN AND SAWYER
498 SEVENTH AVENUE, 11th FLOOR
NEW YORK, NEW YORK 10018

WESTCHESTER JOINT WATER WORKS
MAMARONECK, NY

RYE LAKE WATER FILTRATION PLANT
HARRISON, NY

CIVIL
STORMWATER DRAINAGE PROFILES -
SHEET 3 OF 3

DATE:	FEB 2025
HAZEN NO.:	90388-000
CONTRACT NO.:	A1364-A
DRAWING NUMBER:	C-215

File: C:\USERS\JTANNER\DOCACCDOCS\HAZEN AND SAWYER\90388-000_RYE_LAKE_FILTRATION\PROJECT FILES\PROJECTWISE\CIVIL\C-215 Saved by JTANNER Save date: 2/10/2025 9:34 AM
PLOT DATE: 3/27/2025 12:57 PM BY: JTANNER

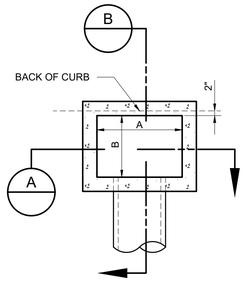

PLAN

NOT TO SCALE

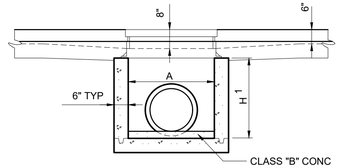

12" TO 24" PIPE

SECTION A

NOT TO SCALE

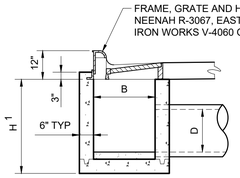

12" TO 24" PIPE

SECTION B

NOT TO SCALE

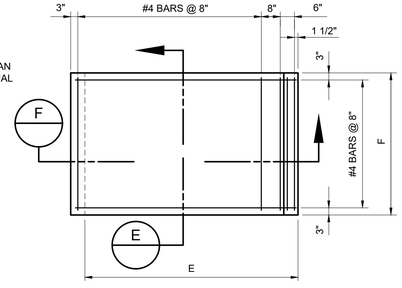

PLAN

NOT TO SCALE

CURB INLET AND YARD INLET STRUCTURE TABLE

STRUCTURE TABLE				
STRUCTURE ID:	NORTHING	EASTING	DETAIL DWG	INNER DIMENSION (INCHES)
YDI-04	813701.82	707595.44	C-216	SEE DETAIL
YDI-03	813408.96	707566.57	C-216	SEE DETAIL
CI-05	813502.55	707822.01	C-216	SEE DETAIL
CI-04	813643.36	707808.23	C-216	SEE DETAIL
CI-03	813672.14	707746.02	C-216	SEE DETAIL
CI-02	813672.17	707655.68	C-216	SEE DETAIL
CI-06	813325.96	707590.17	C-216	SEE DETAIL
YDI-01	813318.65	707784.98	C-216	SEE DETAIL
CI-01	813643.39	707593.61	C-216	SEE DETAIL

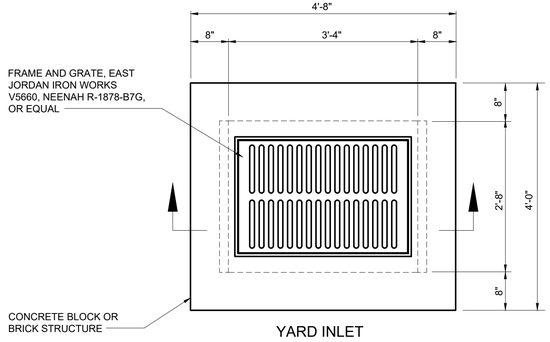

YARD INLET

C-22-0300

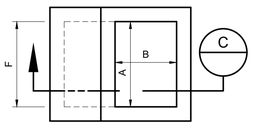

PLAN

NOT TO SCALE

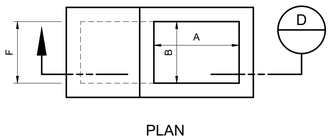

PLAN

NOT TO SCALE

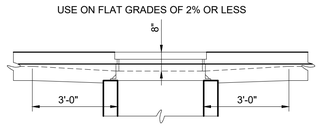

ELEVATION

NORMAL CURB AND GUTTER ON LIGHT GRADES

NOT TO SCALE

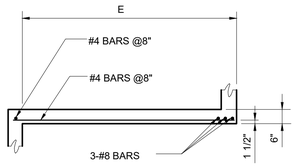

TOP SLAB

SECTION F

NOT TO SCALE

NOTE:

1. STRUCTURAL GEOMETRY AND REINFORCEMENT SHOWN ON THIS DRAWING ARE FOR REFERENCE PURPOSES ONLY. CONTRACTOR SHALL BE RESPONSIBLE FOR THE STRUCTURAL DESIGN OF ALL UTILITY STRUCTURE ELEMENTS PER SPECIFICATION SECTION 33 05 61.

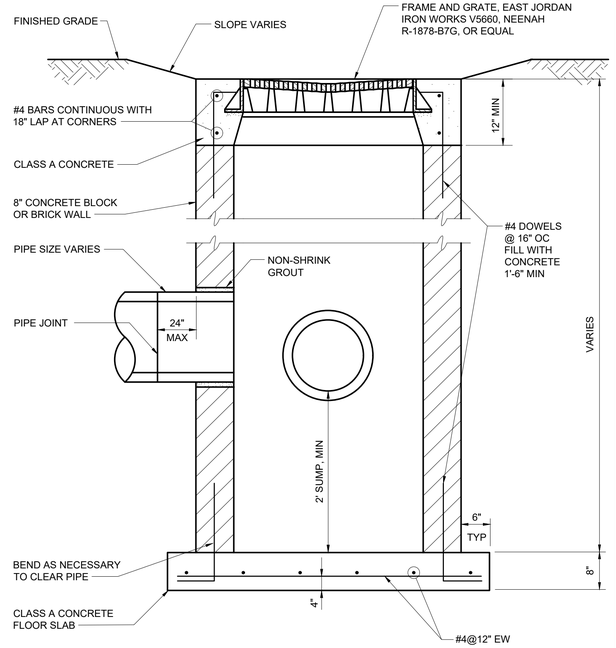

YARD INLET

SCALE: NTS

NOTE:
YARD INLET MAY BE PRECAST CONCRETE - SEE SPECIFICATIONS

MINIMUM DIMENSIONS FOR CONCRETE CURB INLETS

DIMENSIONS OF BOX AND PIPE							COVER DIMENSIONS	
PIPE	SPAN	WIDTH	WIDTH	SPAN	HEIGHT	HEIGHT		
D	A	B	C	G	MIN H [1]	H [2]	E	F
12"	3'-0"	2'-2"	—	—	2'-6"	—	—	—
15"	3'-0"	2'-2"	—	—	2'-9"	—	—	—
18"	3'-0"	2'-2"	—	—	3'-1"	—	—	—
24"	3'-0"	2'-2"	—	—	3'-7"	—	—	—
30"	3'-0"	2'-2"	3'-4"	3'-4"	3'-6"	VARIABLE	1'-8"	4'-0"
36"	3'-0"	2'-2"	3'-10"	3'-10"	4'-1"		2'-2"	4'-0"
42"	3'-0"	2'-2"	—	4'-5"	4'-10"		1'-11"	3'-2"
48"	3'-0"	2'-2"	—	5'-0"	5'-4"		2'-6"	3'-2"
54"	3'-0"	2'-2"	—	5'-7"	5'-11'		3'-1"	3'-2"

CONCRETE CURB INLET NOTES:

1. CLASS "A1" CONCRETE TO BE USED THROUGHOUT.
2. ALL WALLS SHALL BE REINFORCED WITH #4 BARS @ AT 12" EACH WAY PLACED AT MID-DEPTH. BARS SHALL BE BENT AT CORNERS WITH STD. 90° HOOKS. BOTTOM SLAB SHALL BE REINFORCED WITH #5@12" EACH WAY AT MID-DEPTH.
3. ALL CURB INLETS OVER 3'-6" IN DEPTH TO BE PROVIDED WITH STEPS 14" OC. STEPS SHALL BE IN ACCORDANCE WITH SPECIFICATIONS.
4. FOR 8'-0" IN HEIGHT OR LESS USE 6" WALLS AND BOTTOM SLAB. OVER 8'-0" AND UP TO 15'-0" USE 8" WALLS AND BOTTOM SLAB.

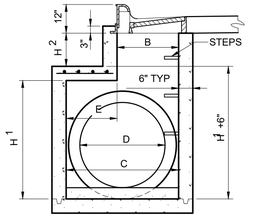

30" TO 36" PIPE

SECTION C

NOT TO SCALE

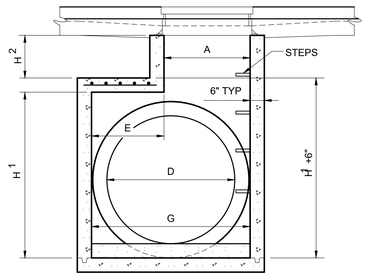

42" TO 54" PIPE

SECTION D

NOT TO SCALE

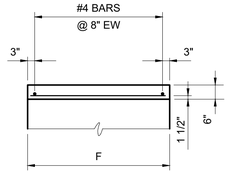

TOP SLAB

SECTION E

NOT TO SCALE

STANDARD CONCRETE CURB INLET 12" THROUGH 54" PIPE

SCALE: NTS

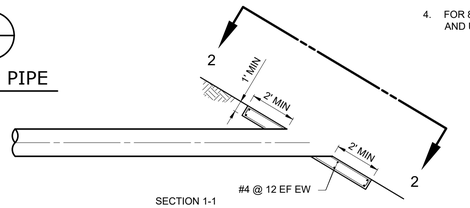

SECTION 1-1

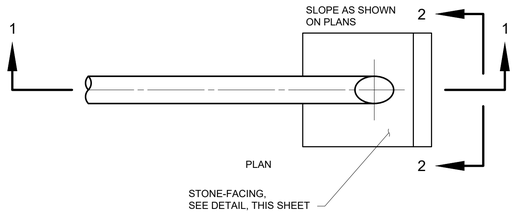

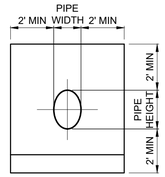

SECTION 2-2

CONCRETE PIPE COLLAR

SCALE: NTS

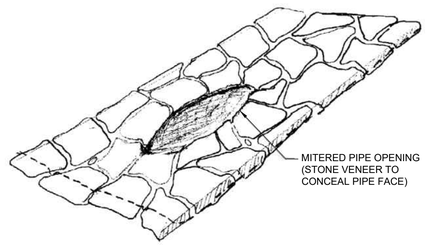

NOTES:

1. STONE VENEER SHALL BE SUBMITTED TO ENGINEER FOR APPROVAL. STONE VENEER SHALL BE CONSTRUCTED OF QUARTZITE SANDSTONE, COMMONLY KNOWN AS PENNSYLVANIA COLONIAL FIELD STONE OR NATURAL LOCAL STONE AS APPROVED BY THE ENGINEER.
2. ALL STONES SHALL HAVE A GENERAL MINIMUM LENGTH OF 1'-6" AND A MINIMUM HEIGHT OF 6". ALL STONES SHALL HAVE A GENERAL MAXIMUM LENGTH OF 3'-0" AND A MAXIMUM HEIGHT OF 12". STONE WIDTHS SHALL GENERALLY BE NO MORE THAN 12". ALL STONES SHALL BE FREE OF SOIL AND DEBRIS IN ORDER TO ACHIEVE SECURE BOND WITH MORTAR.
3. LAY STONE WITH NO LESS THAN 1" AND NO MORE THAN 2" OF MORTAR BETWEEN THE STONE AND CONCRETE. MORTAR AND GROUT SHALL BE PER SPECIFICATION SECTION 04 05 13 AND 04 05 16.

PIPE COLLAR STONE-FACING DETAILS

SCALE: NTS

WARNING
IT IS A VIOLATION OF SECTION 7209.2 OF THE NEW YORK STATE EDUCATION LAW FOR ANY PERSON, UNLESS ACTING UNDER THE DIRECTION OF A LICENSED PROFESSIONAL ENGINEER, TO ALTER IN ANY WAY PLANS, SPECIFICATIONS, PLATS OR REPORTS TO WHICH THE SEAL OF A PROFESSIONAL ENGINEER HAS BEEN APPLIED. IF AN ITEM BEARING THE SEAL OF A PROFESSIONAL ENGINEER IS ALTERED, THE ALTERING ENGINEER SHALL AFFIX TO THE ITEM HIS SEAL AND THE NOTATION "ALTERED BY" FOLLOWED BY HIS SIGNATURE, THE DATE, AND A SPECIFIC DESCRIPTION OF THE ALTERATION.

REV	ISSUED FOR	DATE	BY

PROJECT ENGINEER: R. FROST
DESIGNED BY: C. MCNICOL
DRAWN BY: C. MCNICOL
CHECKED BY: D. SHEERAN
IF THIS BAR DOES NOT MEASURE 1" THEN DRAWING IS NOT TO FULL SCALE 0 1/2" 1"

BID SET

STATE OF NEW YORK · DANIEL JAMES SHEERAN · 088955 · LICENSED PROFESSIONAL ENGINEER

Hazen

HAZEN AND SAWYER
498 SEVENTH AVENUE, 11th FLOOR
NEW YORK, NEW YORK 10018

WESTCHESTER JOINT WATER WORKS
MAMARONECK, NY

RYE LAKE WATER FILTRATION PLANT
HARRISON, NY

CIVIL
STORMWATER DETAILS - SHEET 1 OF 6

DATE: FEB 2025
HAZEN NO.: 90388-000
CONTRACT NO.: A1364-A
DRAWING NUMBER: C-216

File: C:\USERS\JTANNER\DOCACCDOCS\HAZEN AND SAWYER\90388-000_RYE_LAKE_FILTRATION\PROJECT FILES\PROJECTWISE\CIVIL\C-216 Saved by JTANNER Save date: 2/7/2025 9:40 AM
PLOT DATE: 2/6/2025 11:35 PM BY: JTANNER

STORMWATER MANHOLE STRUCTURE TABLE

STRUCTURE TABLE				
STRUCTURE ID:	NORTHING	EASTING	DETAIL DWG	INNER DIMENSION (INCHES)
MH-06	813362.85	707809.49	C-217	48
POCKET WETLAND OUTLET STRUCTURE	813729.40	707845.02	C-218	???
MH-02	813643.39	707738.58	C-217	48
MH-05A	813325.90	707686.78	C-217	48
MH-06A	813406.47	707810.14	C-217	48
MH-12	813828.30	707855.21	C-217	SEE DETAIL
MH-11	813828.30	707793.30	C-217	60
MH-04	813483.68	707811.35	C-217	48
MH-05B	813325.84	707785.18	C-217	60
MH-01	813643.39	707655.46	C-217	48
MH-14	813729.40	707813.30	C-217	48
MH-03	813500.41	707810.97	C-217	60
MH-07B	813550.42	707564.00	C-217	48
MH-08	813717.72	707563.99	C-217	48
MH-09	813828.28	707671.70	C-217	48
MH-10	813828.30	707715.13	C-219	72
MH-13	813828.30	707867.79	C-217	48
MH-07A	813475.59	707565.36	C-217	48

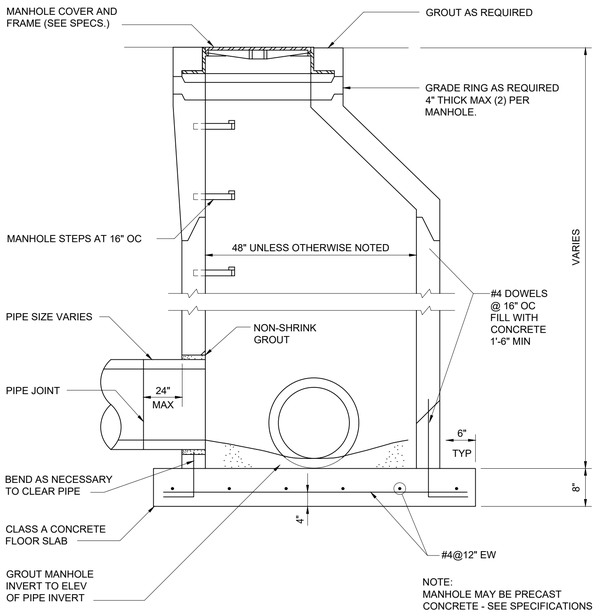

STORMWATER MANHOLE

SCALE: NTS

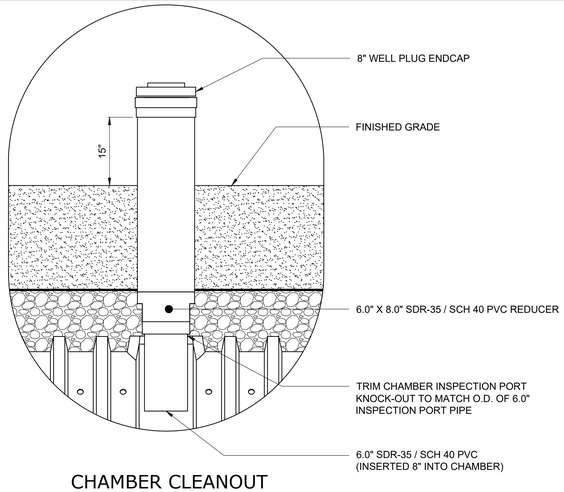

CHAMBER CLEANOUT

SCALE: NTS

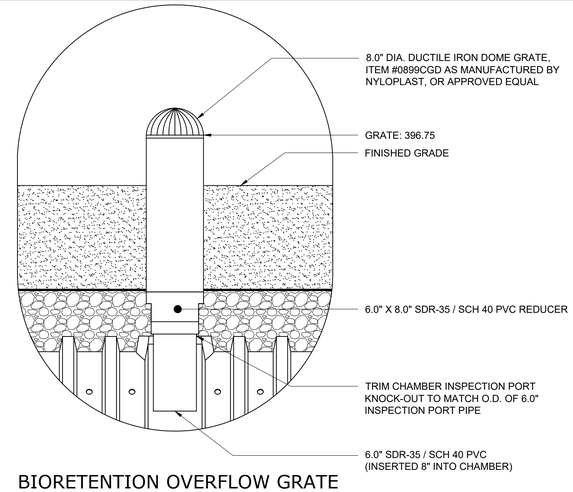

BIORETENTION OVERFLOW GRATE

SCALE: NTS

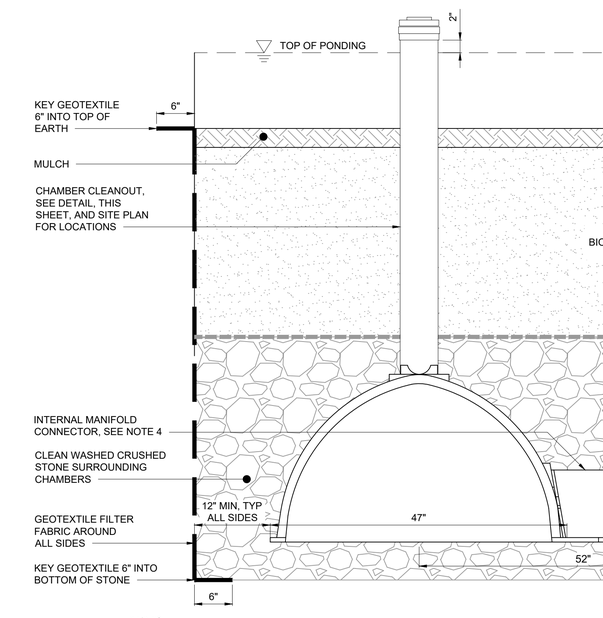

SUBSURFACE STORAGE CHAMBERS

SCALE: 1" = 1'

NOTES:
1. CONTRACTOR TO INSTALL CULTEC 280HD CHAMBERS, AS MANUFACTURED BY CULTEC, OR APPROVED EQUAL. REFER TO MANUFACTURER'S CURRENT RECOMMENDED INSTALLATION GUIDELINES.
2. ALL UNDERGROUND STORAGE CHAMBERS MUST BE INSTALLED IN ACCORDANCE WITH ALL APPLICABLE LOCAL, STATE AND FEDERAL REGULATIONS.
3. CROSS SECTION SHOWN IS A TYPICAL CROSS SECTION FOR THE CHAMBERS, REFER TO C-211 FOR THE STORAGE VOLUME AND NUMBER OF CHAMBERS REQUIRED.
4. INTERNAL MANIFOLD CONNECTION SHALL ONLY BE INSTALLED ON THE FIRST AND LAST CHAMBER OF EACH ROW, OR PER MANUFACTURER REQUIREMENTS.
5. BIORETENTION PONDING DEPTH VARIES DUE TO SLOPE OF BIORETENTION (SEE DWG C-211). BIORETENTION HAS BEEN SIZED WITH AN AVERAGE PONDING DEPTH OF SIX INCHES. SEE DWG C-217 FOR BIORETENTION OVERFLOW GRATE ELEVATIONS. GRATE ELEVATIONS ABOVE SURFACE OF BIORETENTION IS GREATER THAN SIX INCHES TO ACCOMMODATE THE AVERAGE DEPTH ABOVE FINISHED GRADE.
6. SEE SPECIFICATION SECTION 33 46 00 - BIORETENTION CELL FOR BIORETENTION MEDIA REQUIREMENTS.

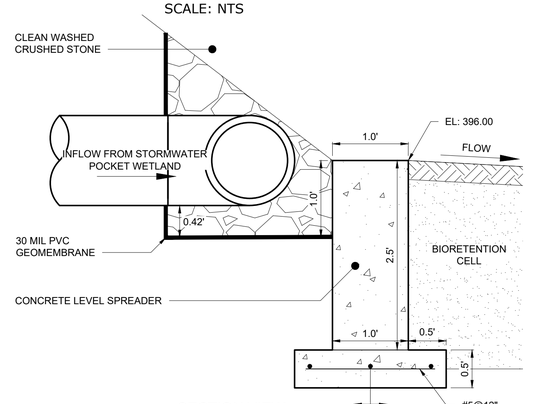

SECTION VIEW

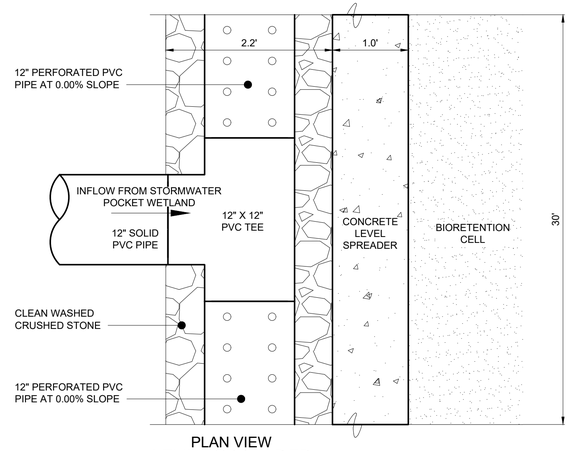

PLAN VIEW

LEVEL SPREADER

SCALE: 1:1

WARNING
IT IS A VIOLATION OF SECTION 7209.2 OF THE NEW YORK STATE EDUCATION LAW FOR ANY PERSON, UNLESS ACTING UNDER THE DIRECTION OF A LICENSED PROFESSIONAL ENGINEER, TO ALTER IN ANY WAY PLANS, SPECIFICATIONS, PLATS OR REPORTS TO WHICH THE SEAL OF A PROFESSIONAL ENGINEER HAS BEEN APPLIED. IF AN ITEM BEARING THE SEAL OF A PROFESSIONAL ENGINEER IS ALTERED, THE ALTERING ENGINEER SHALL AFFIX TO THE ITEM HIS SEAL AND THE NOTATION "ALTERED BY" FOLLOWED BY HIS SIGNATURE, THE DATE, AND A SPECIFIC DESCRIPTION OF THE ALTERATION.

REV	ISSUED FOR	DATE	BY

PROJECT ENGINEER:	R. FROST
DESIGNED BY:	C. MCNICOL
DRAWN BY:	C. MCNICOL
CHECKED BY:	D. SHEERAN

IF THIS BAR DOES NOT MEASURE 1" THEN DRAWING IS NOT TO FULL SCALE (0, 1/2", 1")

BID SET

STATE OF NEW YORK · DANIEL JAMES SHEERAN · 088955 · LICENSED PROFESSIONAL ENGINEER

Hazen

HAZEN AND SAWYER
498 SEVENTH AVENUE, 11th FLOOR
NEW YORK, NEW YORK 10018

WESTCHESTER JOINT WATER WORKS
MAMARONECK, NY

RYE LAKE WATER FILTRATION PLANT
HARRISON, NY

CIVIL
STORMWATER DETAILS - SHEET 2 OF 6

DATE:	FEB 2025
HAZEN NO.:	90388-000
CONTRACT NO.:	A1364-A
DRAWING NUMBER:	C-217

File: C:\USERS\JTANNER\DOCUMENTS\ACCDOCS\HAZEN AND SAWYER\90388-000_RYE_LAKE_FILTRATION\PROJECT FILES\PROJECTWISE\CIVIL\C-217 Saved by JTANNER Save date: 2/7/2025 9:40 AM
PLOT DATE: 3/26/2025 11:36 PM BY: JTANNER

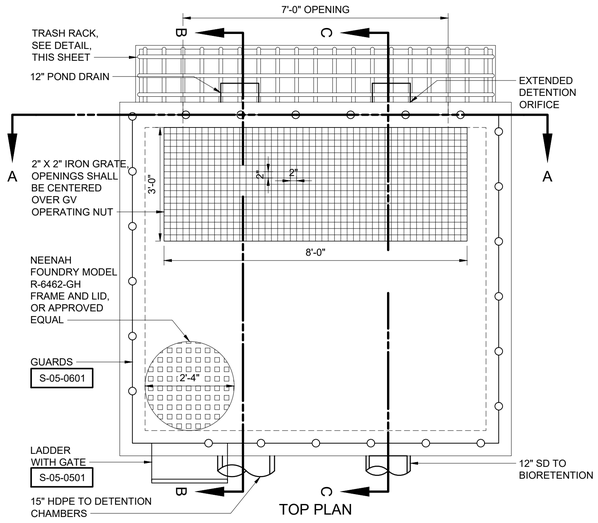

TOP PLAN

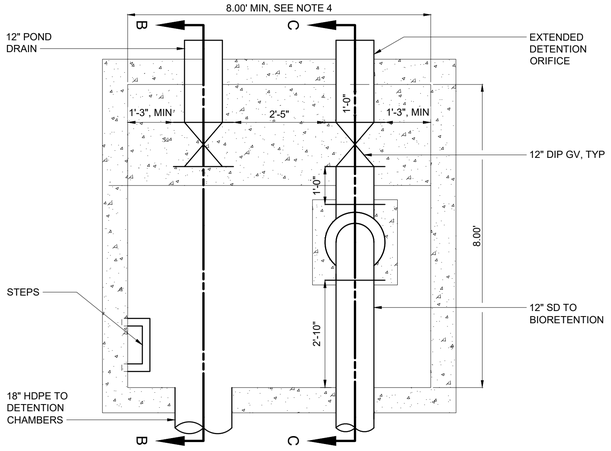

BOTTOM PLAN

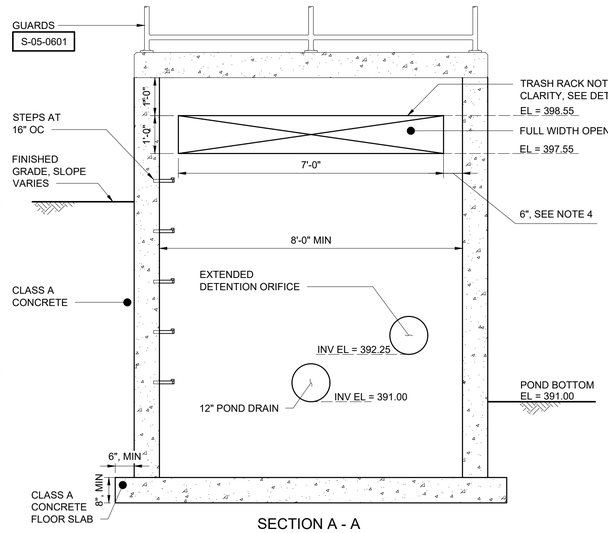

SECTION A - A

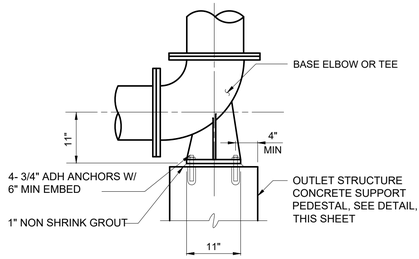

OUTLET STRUCTURE ELBOW (TEE)

SCALE: N.T.S.

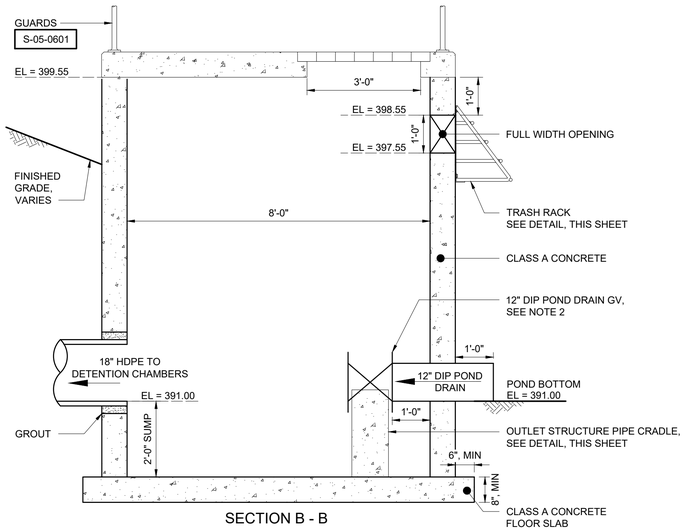

SECTION B - B

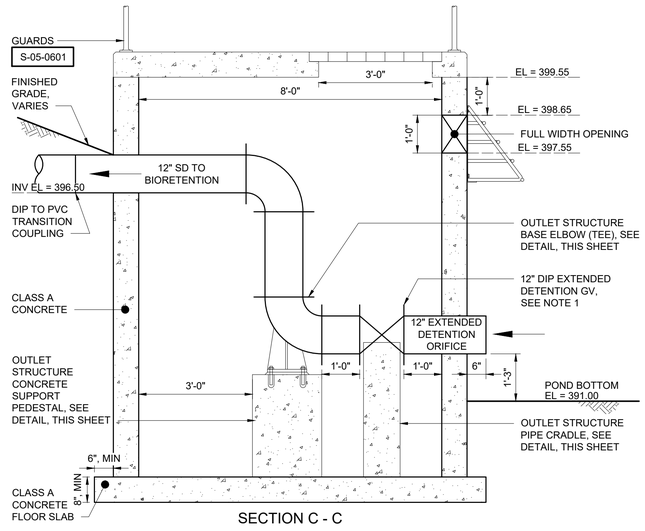

SECTION C - C

STORMWATER POCKET WETLAND OUTLET STRUCTURE

SCALE: 1" = 2'

NOTES:

1. SEE C-219 FOR STRUCTURE OPENING SIZES AND ELEVATIONS IN TABULAR FORM.
2. EXTENDED DETENTION ORIFICE 12" GV SHALL BE OPENED TO THE EQUIVALENT AREA OF A 2.75" DIAMETER ORIFICE.
3. POND DRAIN 12" GV SHALL BE NORMALLY CLOSED.
4. MINIMUM DISTANCE BETWEEN WEIR OPENING AND STRUCTURE WALL SHALL BE 6". DIMENSION MAY BE INCREASED AS REQUIRED BY PRECAST STRUCTURAL REQUIREMENTS, HOWEVER WEIR OPENING SIZING SHALL NOT BE ALTERED. TRASH RACK WIDTH SHALL BE MODIFIED AS NEEDED TO ADHERE TO STRUCTURE, BUT NO LESS THEN THE MINIMUM STATED WIDTH.
5. FULL POST-CONSTRUCTION INSPECTION AND MAINTENANCE REQUIREMENTS ARE PROVIDED IN THE "WJWW RYE LAKE WFP, INSPECTION AND MAINTENANCE OF POST CONSTRUCTION STORMWATER MANAGEMENT PRACITCS" MANUAL PREPARED BY HAZEN AND SAWYER. THIS MANUAL IS PROVIDED AS AN APPENDIX TO THE PROJECT SWPPP. IF BIORETENTION OR POCKET WETLAND MAINTENANCE IS REQUIRED DURING CONSTRUCTION, THE FOLLOWING PROCEDURES SHOULD BE FOLLOWED:

5.1. ALL MAINTENANCE ACTIVITIES SHALL BE PERFORMED WHEN DRY WEATHER IS FORECASTED FOR THE NEXT 48 HOURS, OR THE ENTIRE DURATION OF THE MAINTENANCE ACTIVITY, WHICH EVER IS GREATER.

5.2. DETENTION CHAMBERS: TEMPORARILY CLOSE EXTENDED DETENTION VALVE TO SHUT OFF FLOW TO THE BIORETENTION CELL SURFACE. ADDITIONALLY, TEMPORARILY PLUG THE 15" PIPE, SHUTTING OFF FLOW TO THE DETENTION CHAMBERS. IMMEDIATELY UPON MAINTENANCE COMPLETION, UNPLUG THE 15" PIPE, AND RETURN THE EXTENDED DETENTION VALVE TO THE OPENING SIZE INDICATED ON THE DESIGN DRAWINGS.

5.3. BIORETENTION CELL: TEMPORARILY CLOSE EXTENDED DETENTION VALVE TO SHUT OFF FLOW TO THE BIORETENTION CELL SURFACE. IF MAINTENANCE ACTIVITIES PERMIT IT, 15" PIPE TO DETENTION CHAMBERS MAY REMAIN UNOBSTRUCTED.

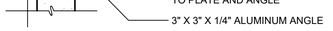

TRASH RACK SECTION VIEW

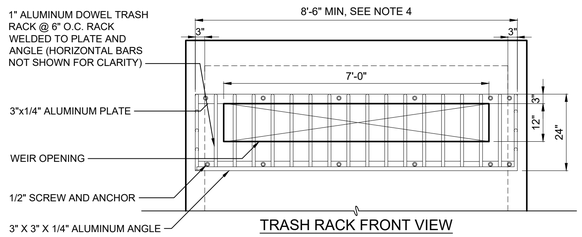

TRASH RACK FRONT VIEW

TRASH RACK

SCALE: 1" = 2'

SCALE: 1" = 2'

2 1 0 2'

WARNING
IT IS A VIOLATION OF SECTION 7209.2 OF THE NEW YORK STATE EDUCATION LAW FOR ANY PERSON, UNLESS ACTING UNDER THE DIRECTION OF A LICENSED PROFESSIONAL ENGINEER, TO ALTER IN ANY WAY PLANS, SPECIFICATIONS, PLATS OR REPORTS TO WHICH THE SEAL OF A PROFESSIONAL ENGINEER HAS BEEN APPLIED. IF AN ITEM BEARING THE SEAL OF A PROFESSIONAL ENGINEER IS ALTERED, THE ALTERING ENGINEER SHALL AFFIX TO THE ITEM HIS SEAL AND THE NOTATION "ALTERED BY" FOLLOWED BY HIS SIGNATURE, THE DATE, AND A SPECIFIC DESCRIPTION OF THE ALTERATION.

REV	ISSUED FOR	DATE	BY

PROJECT ENGINEER:	R. FROST
DESIGNED BY:	C. MCNICOL
DRAWN BY:	C. MCNICOL
CHECKED BY:	D. SHEERAN

IF THIS BAR DOES NOT MEASURE 1" THEN DRAWING IS NOT TO FULL SCALE 0 1/2" 1"

BID SET

STATE OF NEW YORK — JAMES SHEEHAN — LICENSED PROFESSIONAL ENGINEER — 088955

Hazen

HAZEN AND SAWYER
498 SEVENTH AVENUE, 11th FLOOR
NEW YORK, NEW YORK 10018

WESTCHESTER JOINT WATER WORKS
MAMARONECK, NY

RYE LAKE WATER FILTRATION PLANT
HARRISON, NY

CIVIL
STORMWATER DETAILS - SHEET 3 OF 6

DATE:	FEB 2025
HAZEN NO.:	90388-000
CONTRACT NO.:	A1364-A
DRAWING NUMBER:	C-218

File: C:\USERS\JTANNER\DOCUMENTS\HAZEN AND SAWYER\90388-000_RYE_LAKE_FILTRATION\PROJECT FILES\PROJECTWISE\CIVIL\C-218 Saved by JTANNER Save date: 2/7/2025 9:40 AM
PLOT DATE: 3/26/2025 11:36 PM BY: JTANNER

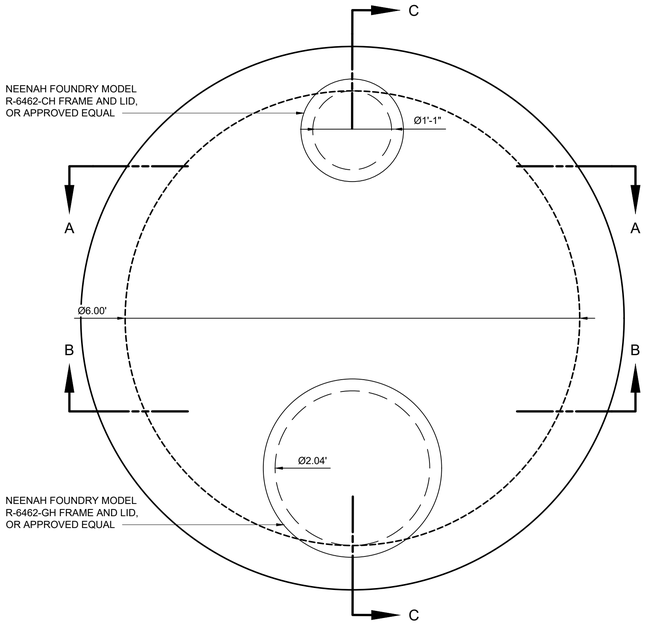

TOP PLAN

SCALE: 1" = 1'

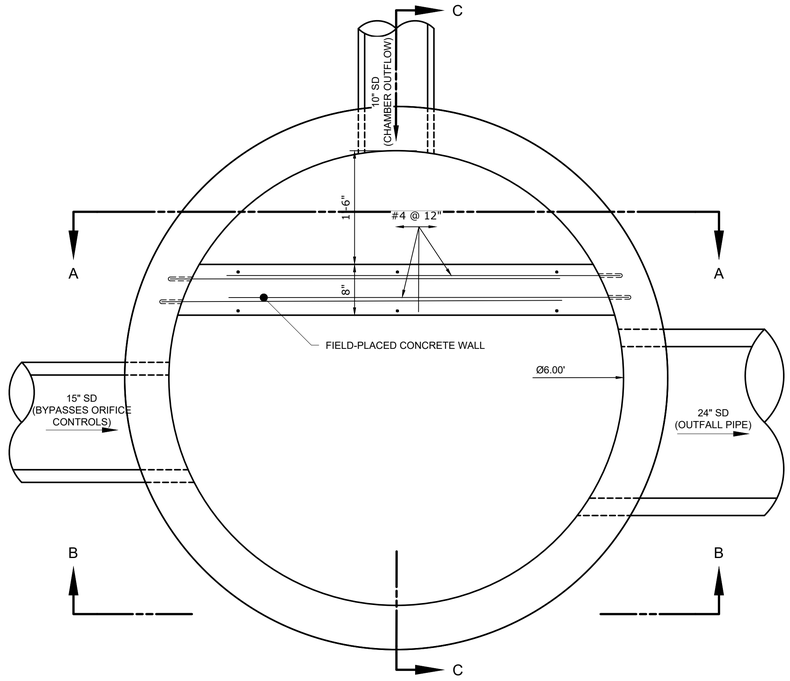

BOTTOM PLAN

SCALE: 1" = 1'

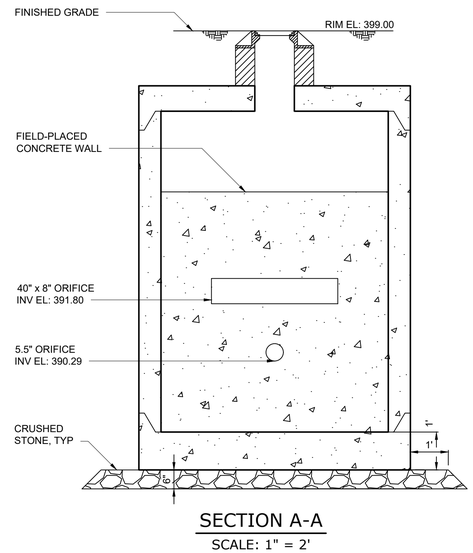

SECTION A-A

SCALE: 1" = 2'

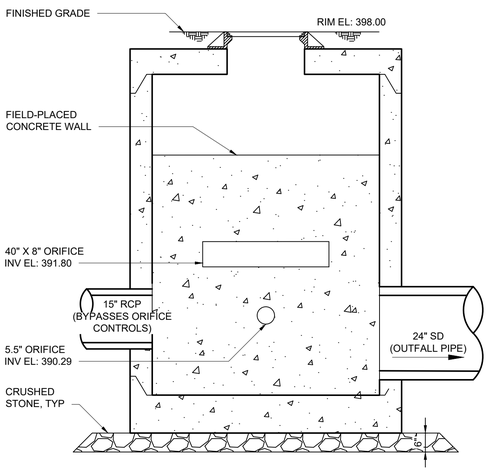

SECTION B-B

SCALE: 1" = 2'

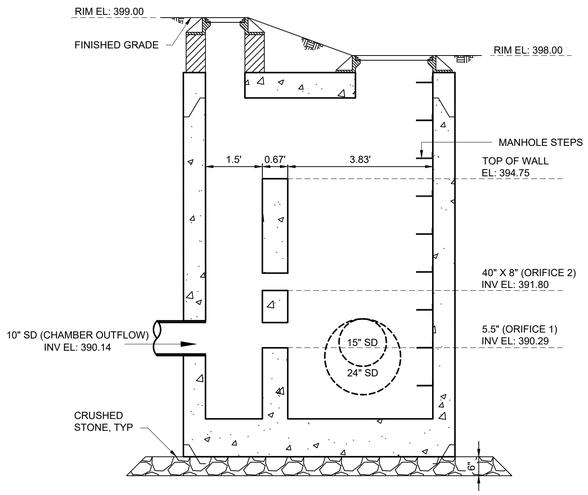

SECTION C-C

SCALE: 1" = 2'

OUTLET SUMMARY TABLE

OPENING DESC.	SIZE	INV IN EL	INV OUT EL	STRUCTURE	DRAWING	FUNCTION
POND DRAIN	12" DIA. PIPE	391.00	N/A	WETLAND OUTLET STRUCTURE	C-218	NORMALLY CLOSED, PROVIDED FOR MAINTANENCE
EXTENDED DETENTION	12" DIA. PIPE[1]	392.25	396.50[2]	WETLAND OUTLET STRUCTURE	C-218	SENDS WQv TO BIORETENTION SURFACE
OVERFLOW WEIR	7' W X 1' H	397.55	N/A	WETLAND OUTLET STRUCTURE	C-218	DIRECTS FLOWS GREATER THAN THE 1-YR TO DETENTION CHAMBERS
PIPE TO DETENTION CHAMBERS	18" DIA PIPE	N/A	391.00	WETLAND OUTLET STRUCTURE	C-218	DIRECTS FLOWS GREATER THAN THE 1-YR TO DETENTION CHAMBERS
EMERGENCY SPILLWAY	8' WIDE WEIR	398.75	398.75	WETLAND EMBANKMENT	C-211	EMERGENCY SPILLWAY FOR STORMS GREATER THAN 500-YR
CHAMBER OUTFLOW PIPE	10" DIA PIPE	390.14	N/A	DETENTION CHAMBER OUTLET STRUCTURE	C-219	PIPED CONNECTION BETWEEN CHAMBERS AND OUTLET STRUCTURE
NON-SMP INFLOW PIPE	15" DIA PIPE	389.80	N/A	DETENTION CHAMBER OUTLET STRUCTURE	C-219	CONVEYS FLOWS FROM NON-SMP DRAINAGE AREAS AND BYPASSES THE ORIFICE CONTROLS WITHIN OUTLET STRUCTURE
ORIFICE 1	5.5" DIA	390.29	N/A	DETENTION CHAMBER OUTLET STRUCTURE	C-219	STORMS LESS THAN 10-YR EVENT
ORIFICE 2	40" W X 8" H	391.80	N/A	DETENTION CHAMBER OUTLET STRUCTURE	C-219	ACTIVATED DURING 10-YR STORM AND GREATER
OUTFALL PIPE	24" DIA. PIPE	N/A	389.05	DETENTION CHAMBER OUTLET STRUCTURE	C-219	CONVEYS FLOWS FROM CHAMBERS TO SITE OUTFALL
BIORETENTION OVERFLOW GRATE	(3) 6" DIA OPENINGS	396.75	N/A	BIORETENTION	C-211 AND C-217	CONNECTS BIORETENTION PONDING TO CHAMBERS

1. 12" GV PROVIDED ON PIPE INTERNAL TO OUTLET STRUCTURE. SEE NOTE 1, THIS DRAWING FOR EQUAVILENT AREA OPENING REQUIREMENT
2. INV OUT SERVES AS THE EFFECTIVE INV IN FOR THE EXTENDED DETENTION ORIFICE

WARNING
IT IS A VIOLATION OF SECTION 7209.2 OF THE NEW YORK STATE EDUCATION LAW FOR ANY PERSON, UNLESS ACTING UNDER THE DIRECTION OF A LICENSED PROFESSIONAL ENGINEER, TO ALTER IN ANY WAY PLANS, SPECIFICATIONS, PLATS OR REPORTS TO WHICH THE SEAL OF A PROFESSIONAL ENGINEER HAS BEEN APPLIED. IF AN ITEM BEARING THE SEAL OF A PROFESSIONAL ENGINEER IS ALTERED, THE ALTERING ENGINEER SHALL AFFIX TO THE ITEM HIS SEAL AND THE NOTATION "ALTERED BY" FOLLOWED BY HIS SIGNATURE, THE DATE, AND A SPECIFIC DESCRIPTION OF THE ALTERATION.

DETENTION CHAMBER OUTLET STRUCTURE

REV	ISSUED FOR	DATE	BY

PROJECT ENGINEER:	R. FROST
DESIGNED BY:	J. TANNER
DRAWN BY:	J. TANNER
CHECKED BY:	D. SHEERAN
IF THIS BAR DOES NOT MEASURE 1" THEN DRAWING IS NOT TO FULL SCALE	0 1/2" 1"

BID SET



Hazen
HAZEN AND SAWYER
498 SEVENTH AVENUE, 11th FLOOR
NEW YORK, NEW YORK 10018

WESTCHESTER JOINT WATER WORKS
MAMARONECK, NY

RYE LAKE WATER FILTRATION PLANT
HARRISON, NY

CIVIL
STORMWATER DETAILS - SHEET 4 OF 6

DATE:	FEB 2025
HAZEN NO.:	90388-000
CONTRACT NO.:	A1364-A
DRAWING NUMBER:	C-219

File: C:\USERS\JTANNER\DOCAC\DOCS\HAZEN AND SAWYER\90388-000_RYE_LAKE_FILTRATION\PROJECT FILES\PROJECTWISE\CIVIL\C-219 Saved by JTANNER Save date: 2/7/2025 9:40 AM
PLOT DATE: 3/26/2025 11:36 PM BY: JTANNER

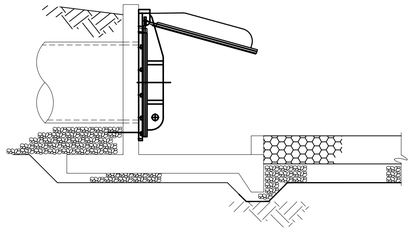

SECTION WITH FLAP GATE

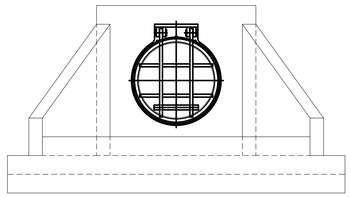

ELEVATION WITH FLAP GATE

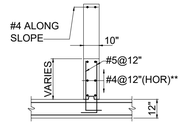

SECTION B-B

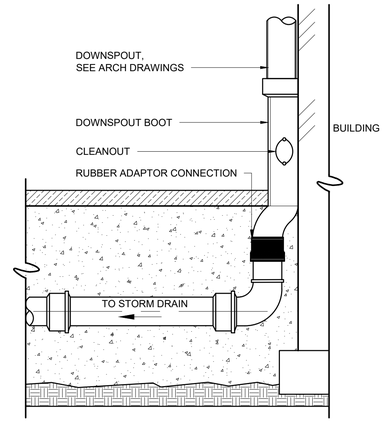

DOWN SPOUT TIE-IN

SCALE: N.T.S.

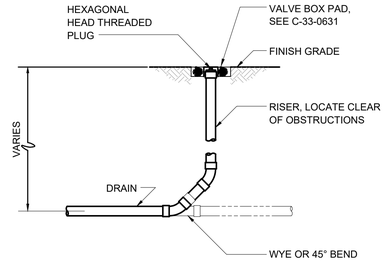

CLEANOUT FOR GRAVITY LINES

SCALE: N.T.S.

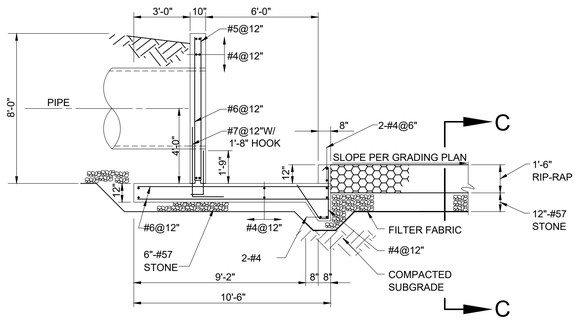

SECTION A-A

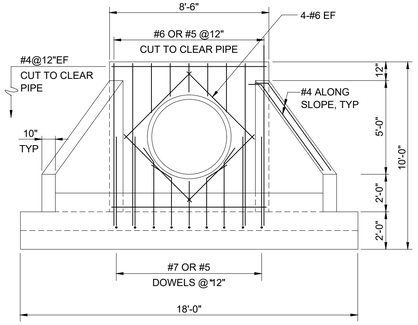

NOTE: OTHER REINFORCING NOT SHOWN FOR CLARITY

ELEVATION

* BEND AS SHOWN TO CLEAR PIPE

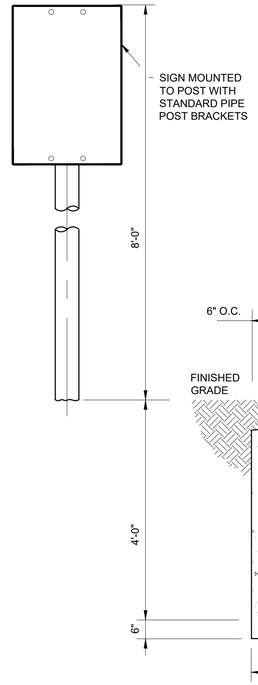

FRONT

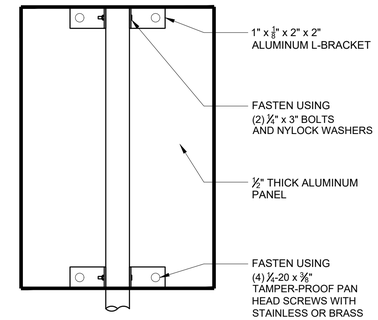

REAR DETAIL

STEEL SIGN POST WITH RIGID ALUMINUM SIGN

NTS

SECTION C-C

PLAN WITH FLAP GATE

** THESE BARS SHALL EXTEND INTO HEADWALL 8" W/ STD 90° HOOKS

HEADWALL WITH FLAP GATE

SCALE: N.T.S.

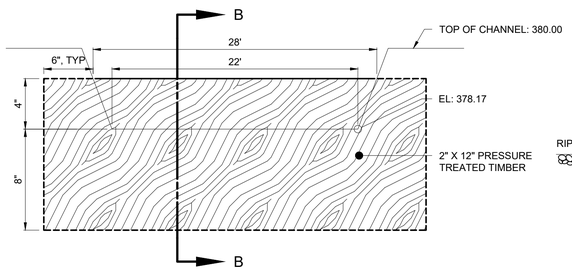

SECTION A - A

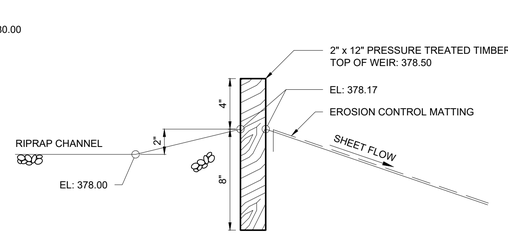

SECTION B - B

FLOW SPREADER

SCALE: N.T.S.

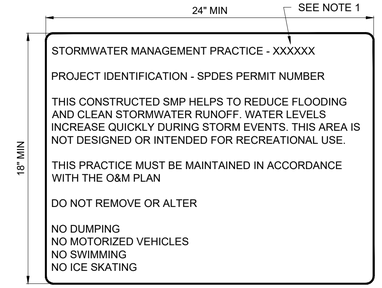

NOTES:

1. REFER TO DRAWING C-211 FOR THE SIGN TYPE.
   1.1. SIGN TYPE A SHALL SAY "STORMWATER POCKET WETLAND"
   1.2. SIGN TYPE B SHALL SAY "BIORETENTION CELL WITH SUBSURFACE DETENTION CHAMBERS"
2. CONTRACTOR SHALL BE RESPONSIBLE FOR PROVIDING THE CORRECT SPDES PERMIT NUMBER FOR THE SIGN.
3. SEE STEEL SIGN POST DETAIL ON THIS DWG FOR MOUNTING OF SIGN.

STORMWATER PRACTICE WARNING SIGN

NTS

SMP INFORMATIONAL SIGN

NTS

WARNING
IT IS A VIOLATION OF SECTION 7209.2 OF THE NEW YORK STATE EDUCATION LAW FOR ANY PERSON, UNLESS ACTING UNDER THE DIRECTION OF A LICENSED PROFESSIONAL ENGINEER, TO ALTER IN ANY WAY PLANS, SPECIFICATIONS, PLATS OR REPORTS TO WHICH THE SEAL OF A PROFESSIONAL ENGINEER HAS BEEN APPLIED. IF AN ITEM BEARING THE SEAL OF A PROFESSIONAL ENGINEER IS ALTERED, THE ALTERING ENGINEER SHALL AFFIX TO THE ITEM HIS SEAL AND THE NOTATION "ALTERED BY" FOLLOWED BY HIS SIGNATURE, THE DATE, AND A SPECIFIC DESCRIPTION OF THE ALTERATION.

REV	ISSUED FOR	DATE	BY

PROJECT ENGINEER:	R. FROST
DESIGNED BY:	J. TANNER
DRAWN BY:	J. TANNER
CHECKED BY:	D. SHEERAN

IF THIS BAR DOES NOT MEASURE 1" THEN DRAWING IS NOT TO FULL SCALE 0 1/2" 1"

BID SET

DANIEL JAMES SHEERAN — STATE OF NEW YORK — 088955 — LICENSED PROFESSIONAL ENGINEER

Hazen

HAZEN AND SAWYER
498 SEVENTH AVENUE, 11th FLOOR
NEW YORK, NEW YORK 10018

WESTCHESTER JOINT WATER WORKS
MAMARONECK, NY

RYE LAKE WATER FILTRATION PLANT
HARRISON, NY

CIVIL
STORMWATER DETAILS - SHEET 5 OF 6

DATE:	FEB 2025
HAZEN NO.:	90388-000
CONTRACT NO.:	A1364-A
DRAWING NUMBER:	C-220

File: C:\USERS\JTANNER\DOCUMENTS\ACCDOCS\HAZEN AND SAWYER\90388-000_RYE_LAKE_FILTRATION\PROJECT FILES\PROJECTWISE\CIVIL\C-220 Saved by JTANNER Save date: 2/7/2025 9:39 AM
PLOT DATE: 3/26/2025 11:36 PM BY: JTANNER

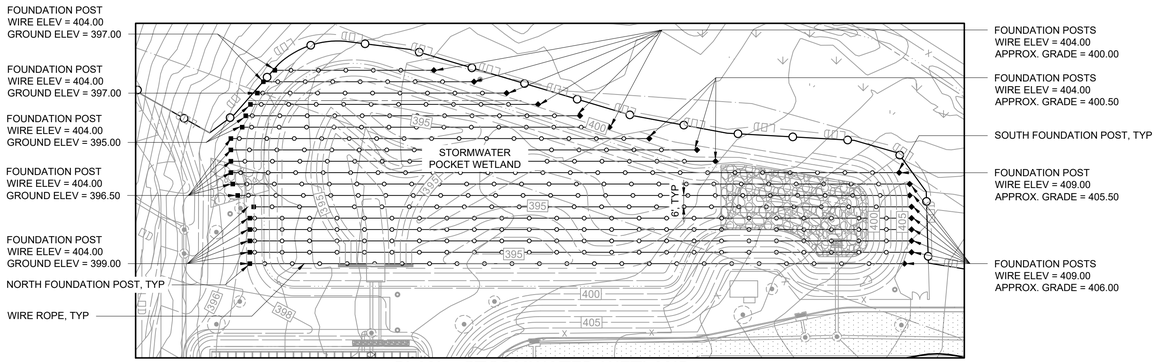

PLAN - STORMWATER WETLAND

SCALE: 1" = 40'

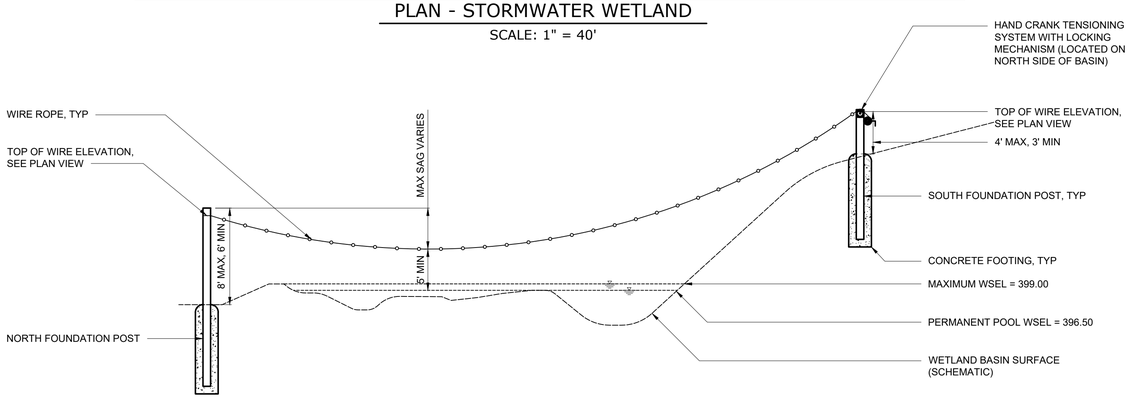

SCHEMATIC PROFILE - STORMWATER WETLAND

SCALE: N.T.S.

NOTES:

1. PLAN VIEWS HAVE ALL NEW CONSTRUCTION WITH THE EXCEPTION OF THE BIRD DETERRENT SYSTEM SCREENED FOR CLARITY.
2. CONTRACTOR SHALL NOT DISCHARGE STORMWATER TO THE STORMWATER POCKET WETLAND UNTIL THE BIRD DETERRENT SYSTEM IS INSTALLED. ANY WATER THAT MAY ACCUMULATE DURING CONSTRUCTION SHALL BE SUMP PUMPED TO THE OUTFALL TO MITIGATE BIRD AND WATERFOWL FROM ENTERING THE WETLAND. CONTRACTOR SHALL PROVIDE MEANS OF PROVIDING NON-TURBID DISCHARGES.
3. BIRD DETERRENT SYSTEM SHALL BE IMPLEMENTED IMMEDIATELY AFTER SEDIMENT BASINS ARE CONSTRUCTED. SEDIMENT BASIN BIRD DETERRENT SYSTEM IS INTENDED TO BE TEMPORARY, AND SHOULD BE REMOVED WHEN THE SEDIMENT BASINS ARE REMOVED.
4. CONTRACTOR SHALL BE RESPONSIBLE FOR MAINTENANCE OF THE SEDIMENT BASIN AND WETLAND BIRD DETERRENT SYSTEMS FOR THE DURATION OF CONSTRUCTION
5. THE CONTRACTOR IS PROHIBITED FROM RE-USING ANY OF THE SEDIMENT BASIN BIRD DETERRENT SYSTEMS IN THE FINAL CONDITIONS OF THE STORMWATER WETLAND.

FOUNDATION POST LEGEND

- ■ NORTH FOUNDATION POST
- ◆ SOUTH FOUNDATION POST
- ● SEDIMENT BASIN (TEMPORARY) FOUNDATION POST

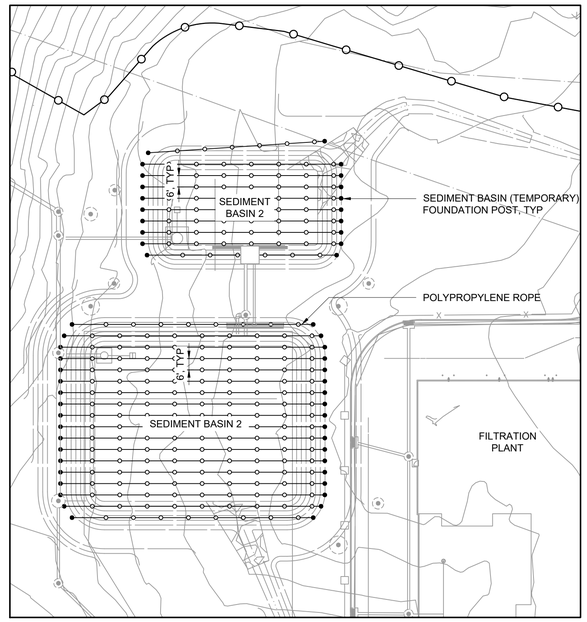

PLAN - SEDIMENT BASINS

SCALE: 1" = 40'

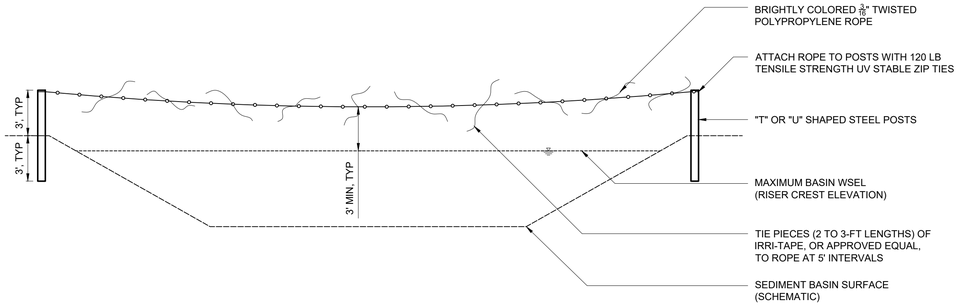

SCHEMATIC PROFILE - SEDIMENT BASINS

SCALE: N.T.S.

BIRD DETERRENT FOR STORMWATER SYSTEMS

SCALE: AS SHOWN

WARNING
IT IS A VIOLATION OF SECTION 7209.2 OF THE NEW YORK STATE EDUCATION LAW FOR ANY PERSON, UNLESS ACTING UNDER THE DIRECTION OF A LICENSED PROFESSIONAL ENGINEER, TO ALTER IN ANY WAY PLANS, SPECIFICATIONS, PLATS OR REPORTS TO WHICH THE SEAL OF A PROFESSIONAL ENGINEER HAS BEEN APPLIED. IF AN ITEM BEARING THE SEAL OF A PROFESSIONAL ENGINEER IS ALTERED, THE ALTERING ENGINEER SHALL AFFIX TO THE ITEM HIS SEAL AND THE NOTATION "ALTERED BY" FOLLOWED BY HIS SIGNATURE, THE DATE, AND A SPECIFIC DESCRIPTION OF THE ALTERATION.

REV	ISSUED FOR	DATE	BY

PROJECT ENGINEER:	R. FROST
DESIGNED BY:	C. MCNICOL
DRAWN BY:	C. MCNICOL
CHECKED BY:	D. SHEERAN

IF THIS BAR DOES NOT MEASURE 1" THEN DRAWING IS NOT TO FULL SCALE (0, 1/2", 1")

BID SET

STATE OF NEW YORK · DANIEL JAMES SHEERAN · 088955 · LICENSED PROFESSIONAL ENGINEER

Hazen

HAZEN AND SAWYER
498 SEVENTH AVENUE, 11th FLOOR
NEW YORK, NEW YORK 10018

WESTCHESTER JOINT WATER WORKS
MAMARONECK, NY

RYE LAKE WATER FILTRATION PLANT
HARRISON, NY

CIVIL
STORMWATER DETAILS - SHEET 6 OF 6

DATE:	FEB 2025
HAZEN NO.:	90388-000
CONTRACT NO.:	A1364-A
DRAWING NUMBER:	C-221

File: C:\USERS\JTANNER\DOCACCDOCS\HAZEN AND SAWYER\90388-000_RYE_LAKE_FILTRATION\PROJECT FILES\PROJECTWISE\CIVIL\C-221 Saved by CMCNICOL Save date: 2/11/2025 1:44 PM
PLOT DATE: 3/27/2025 12:53 PM BY: JTANNER

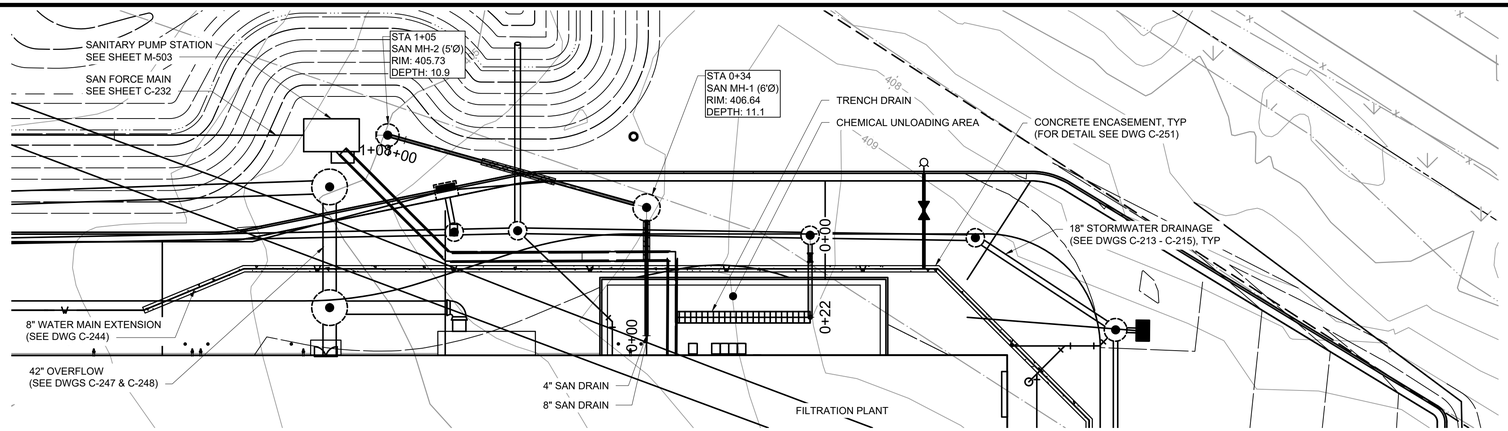

PLAN

SCALE: 1" = 20'

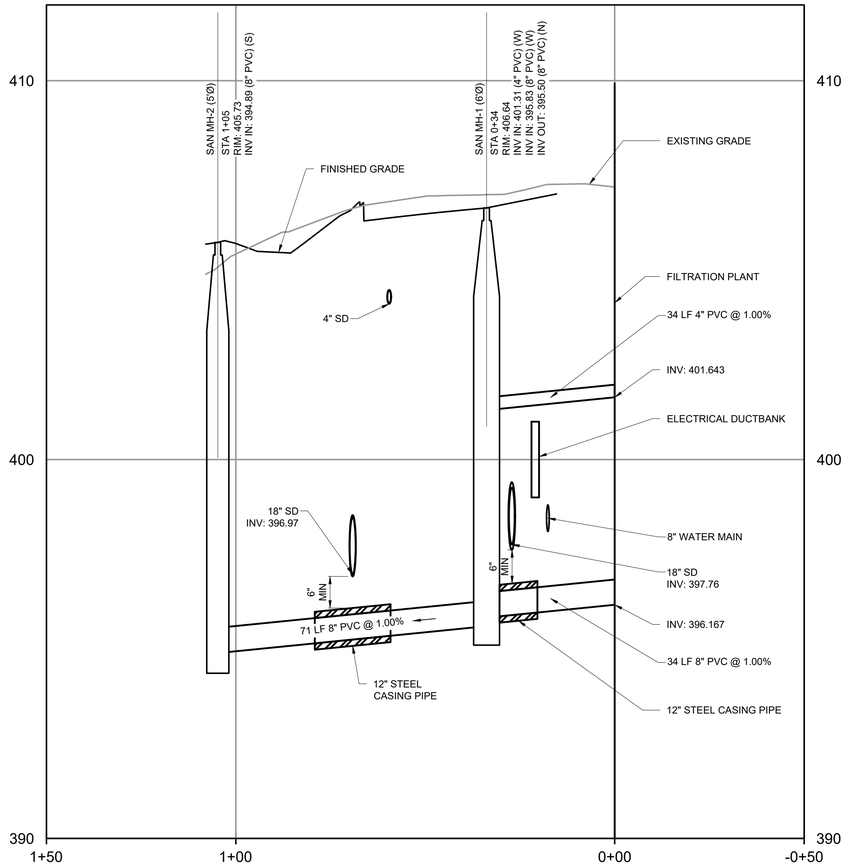

PROFILE

HORIZONTAL SCALE: 1" = 20'
VERTICAL SCALE: 1"=4'

WCDOH NOTE:

THE SANITARY FORCE MAIN DESIGN WILL BE SUBMITTED UNDER SEPARATE COVER AS PART OF THE WESTCHESTER COUNTY AIRPORT SEWER PROJECT.

N

HORIZONTAL SCALE: 1" = 20'

20 10 0 20'

4 2 0 4

VERTICAL SCALE: 1"=4'

WARNING

IT IS A VIOLATION OF SECTION 7209.2 OF THE NEW YORK STATE EDUCATION LAW FOR ANY PERSON, UNLESS ACTING UNDER THE DIRECTION OF A LICENSED PROFESSIONAL ENGINEER, TO ALTER IN ANY WAY PLANS, SPECIFICATIONS, PLATS OR REPORTS TO WHICH THE SEAL OF A PROFESSIONAL ENGINEER HAS BEEN APPLIED. IF AN ITEM BEARING THE SEAL OF A PROFESSIONAL ENGINEER IS ALTERED, THE ALTERING ENGINEER SHALL AFFIX TO THE ITEM HIS SEAL AND THE NOTATION "ALTERED BY" FOLLOWED BY HIS SIGNATURE, THE DATE, AND A SPECIFIC DESCRIPTION OF THE ALTERATION.

REV	ISSUED FOR	DATE	BY

PROJECT ENGINEER:	R. FROST
DESIGNED BY:	J. TANNER
DRAWN BY:	J. TANNER
CHECKED BY:	D. SHEERAN
IF THIS BAR DOES NOT MEASURE 1" THEN DRAWING IS NOT TO FULL SCALE	0 1/2" 1"

BID SET

STATE OF NEW YORK · DANIEL JAMES SHEERAN · 088955 · LICENSED PROFESSIONAL ENGINEER

Hazen

HAZEN AND SAWYER
498 SEVENTH AVENUE, 11th FLOOR
NEW YORK, NEW YORK 10018

WESTCHESTER JOINT WATER WORKS
MAMARONECK, NY

RYE LAKE WATER FILTRATION PLANT
HARRISON, NY

CIVIL
SANITARY DRAIN PLAN AND PROFILE

DATE:	FEB 2025
HAZEN NO.:	90388-000
CONTRACT NO.:	A1364-A
DRAWING NUMBER:	C-231

File: C:\USERS\JTANNER\DC\ACCDOCS\HAZEN AND SAWYER\90388-000_RYE_LAKE_FILTRATION\PROJECT FILES\PROJECTWISE\CIVIL\C-231 Saved by JTANNER Save date: 3/27/2025 12:48 PM
PLOT DATE: 3/27/2025 12:48 PM BY: JTANNER

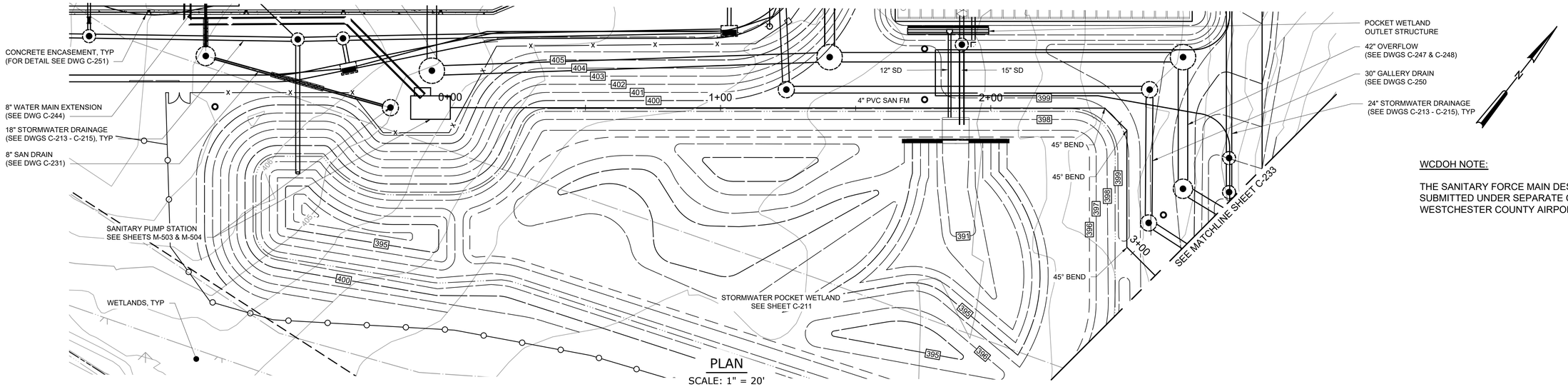

PLAN

SCALE: 1" = 20'

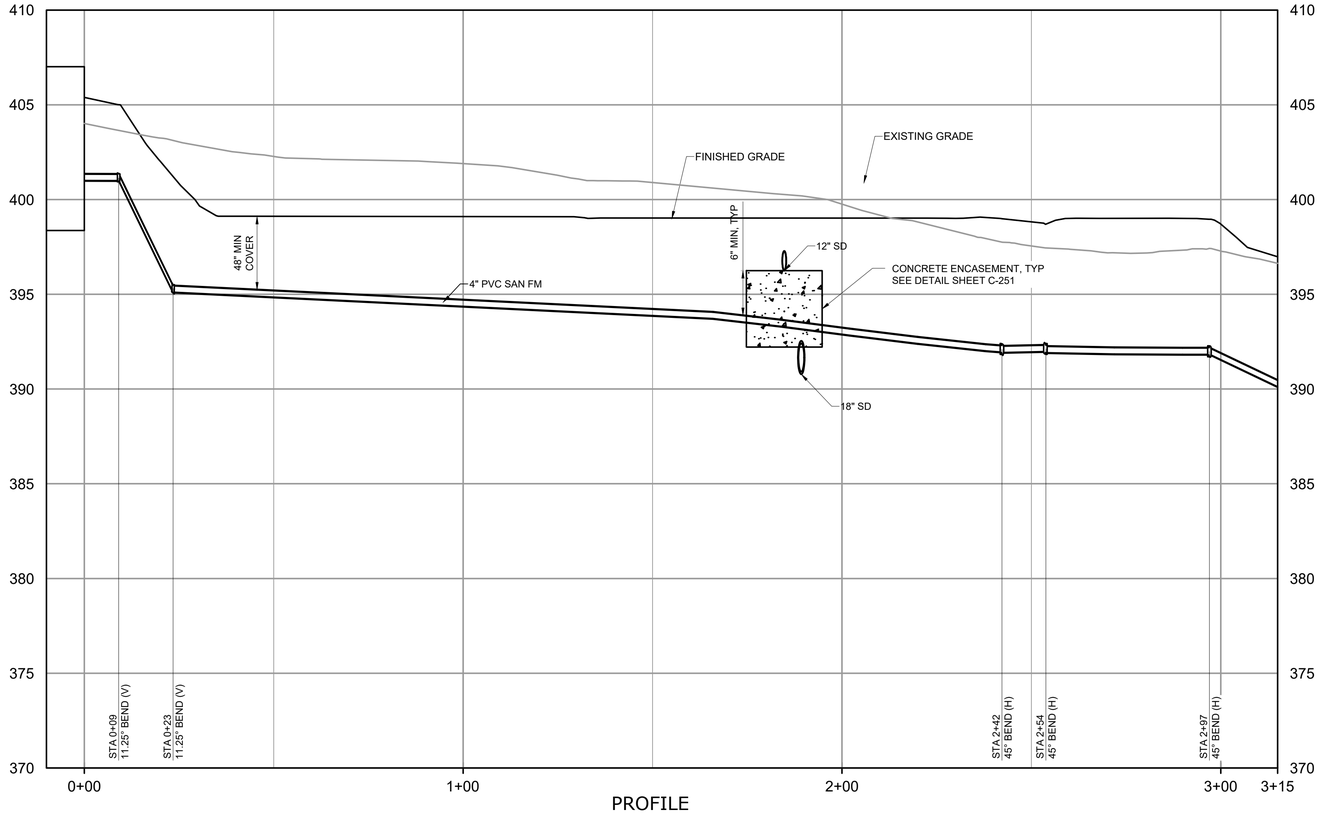

PROFILE

HORIZONTAL SCALE 1"=20'
VERTICAL SCALE: 1"=4'

WCDOH NOTE:

THE SANITARY FORCE MAIN DESIGN WILL BE SUBMITTED UNDER SEPARATE COVER AS PART OF THE WESTCHESTER COUNTY AIRPORT SEWER PROJECT.

HORIZONTAL SCALE: 1" = 20'

20 10 0 20'

4 2 0 4

VERTICAL SCALE: 1"=4'

WARNING
IT IS A VIOLATION OF SECTION 7209.2 OF THE NEW YORK STATE EDUCATION LAW FOR ANY PERSON, UNLESS ACTING UNDER THE DIRECTION OF A LICENSED PROFESSIONAL ENGINEER, TO ALTER IN ANY WAY PLANS, SPECIFICATIONS, PLATS OR REPORTS TO WHICH THE SEAL OF A PROFESSIONAL ENGINEER HAS BEEN APPLIED. IF AN ITEM BEARING THE SEAL OF A PROFESSIONAL ENGINEER IS ALTERED, THE ALTERING ENGINEER SHALL AFFIX TO THE ITEM HIS SEAL AND THE NOTATION "ALTERED BY" FOLLOWED BY HIS SIGNATURE, THE DATE, AND A SPECIFIC DESCRIPTION OF THE ALTERATION.

REV	ISSUED FOR	DATE	BY

PROJECT ENGINEER:	R. FROST
DESIGNED BY:	J. TANNER
DRAWN BY:	J. TANNER
CHECKED BY:	D. SHEERAN

IF THIS BAR DOES NOT MEASURE 1" THEN DRAWING IS NOT TO FULL SCALE (0 1/2" 1")

BID SET

Hazen

HAZEN AND SAWYER
498 SEVENTH AVENUE, 11th FLOOR
NEW YORK, NEW YORK 10018

WESTCHESTER JOINT WATER WORKS
MAMARONECK, NY

RYE LAKE WATER FILTRATION PLANT
HARRISON, NY

CIVIL
SANITARY FM
(SHEET 1 OF 2)

DATE:	FEB 2025
HAZEN NO.:	90388-000
CONTRACT NO.:	A1364-A
DRAWING NUMBER:	C-232

File: C:\USERS\LWALLACE\DC\ACCDOCS\HAZEN AND SAWYER\90388-000_RYE_LAKE_FILTRATION\PROJECT FILES\PROJECTWISE\CIVIL\C-232 Saved by LWALLACE Save date: 3/27/2025 3:28 PM
PLOT DATE: 3/27/2025 3:28 PM BY: LWALLACE

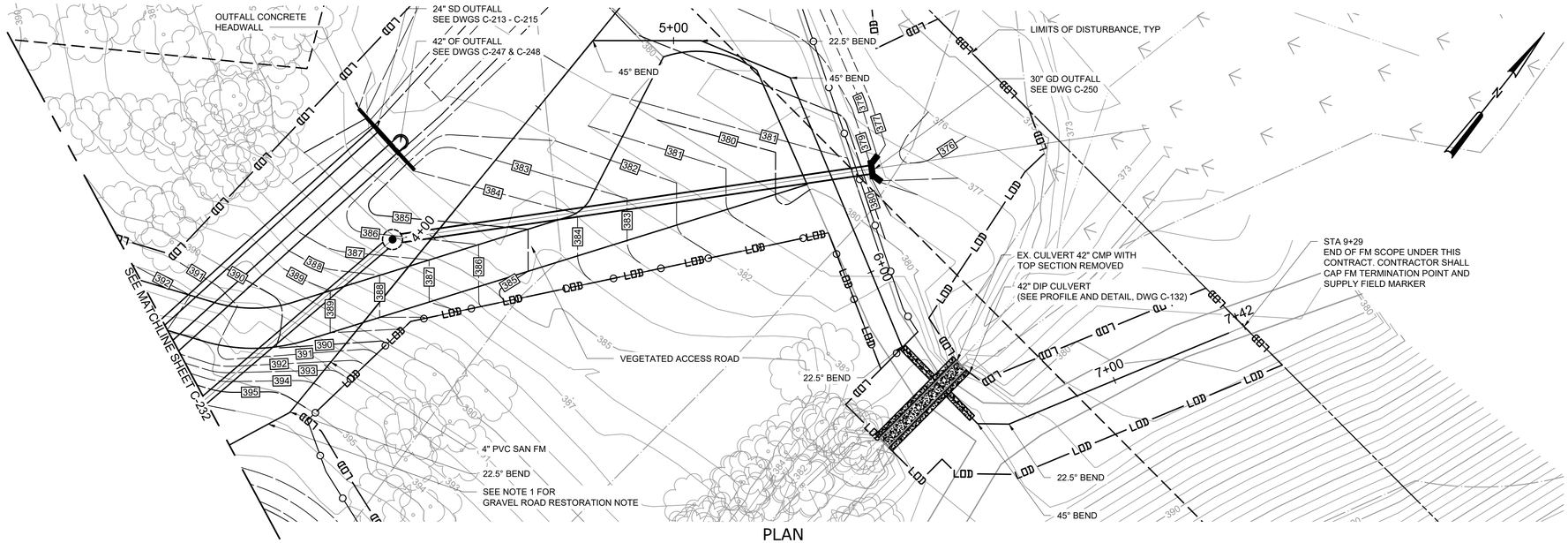

PLAN

SCALE: 1" = 20'

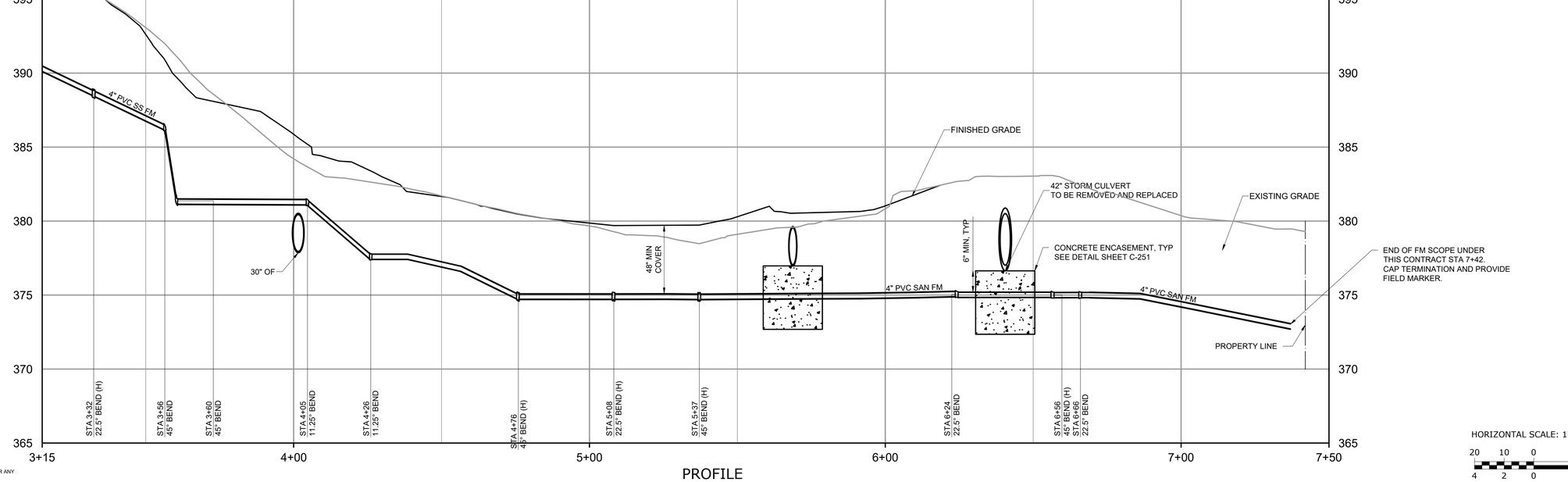

PROFILE

HORIZONTAL SCALE 1"=20'
VERTICAL SCALE: 1"=4'

HORIZONTAL SCALE: 1" = 20'

20 10 0 20'

4 2 0 4

VERTICAL SCALE: 1"=4'

NOTES:

1. RESTORE GRAVEL ROAD TO EXISTING TYPE AND DEPTH OF MATERIAL AS REQUIRED FOR FORCEMAIN INSTALLATION.

WCDOH NOTE:

THE SANITARY FORCE MAIN DESIGN WILL BE SUBMITTED UNDER SEPARATE COVER AS PART OF THE WESTCHESTER COUNTY AIRPORT SEWER PROJECT.

WARNING
IT IS A VIOLATION OF SECTION 7209.2 OF THE NEW YORK STATE EDUCATION LAW FOR ANY PERSON, UNLESS ACTING UNDER THE DIRECTION OF A LICENSED PROFESSIONAL ENGINEER, TO ALTER IN ANY WAY PLANS, SPECIFICATIONS, PLATS OR REPORTS TO WHICH THE SEAL OF A PROFESSIONAL ENGINEER HAS BEEN APPLIED. IF AN ITEM BEARING THE SEAL OF A PROFESSIONAL ENGINEER IS ALTERED, THE ALTERING ENGINEER SHALL AFFIX TO THE ITEM HIS SEAL AND THE NOTATION "ALTERED BY" FOLLOWED BY HIS SIGNATURE, THE DATE, AND A SPECIFIC DESCRIPTION OF THE ALTERATION.

REV	ISSUED FOR	DATE	BY

PROJECT ENGINEER: R. FROST
DESIGNED BY: J. TANNER
DRAWN BY: J. TANNER
CHECKED BY: D. SHEERAN

IF THIS BAR DOES NOT MEASURE 1" THEN DRAWING IS NOT TO FULL SCALE 0 1/2" 1"

BID SET

STATE OF NEW YORK DANIEL JAMES SHEERAN 088955 LICENSED PROFESSIONAL ENGINEER

Hazen

HAZEN AND SAWYER
498 SEVENTH AVENUE, 11th FLOOR
NEW YORK, NEW YORK 10018

WESTCHESTER JOINT WATER WORKS
MAMARONECK, NY

RYE LAKE WATER FILTRATION PLANT
HARRISON, NY

CIVIL
SANITARY FM
(SHEET 2 OF 2)

DATE: FEB 2025
HAZEN NO.: 90388-000
CONTRACT NO.: A1364-A
DRAWING NUMBER: C-233

File: C:\USERS\LWALLACE\DCACDOCS\HAZEN AND SAWYER\90388-000_RYE_LAKE_FILTRATION\PROJECT FILES\PROJECTWISE\CIVIL\C-232 Saved by LWALLACE Save date: 3/27/2025 3:29 PM
PLOT DATE: 3/27/2025 4:01 PM BY: LWALLACE

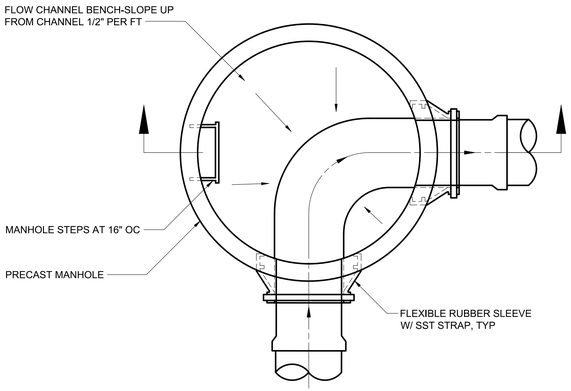

MANHOLE PLAN

C-33-0600

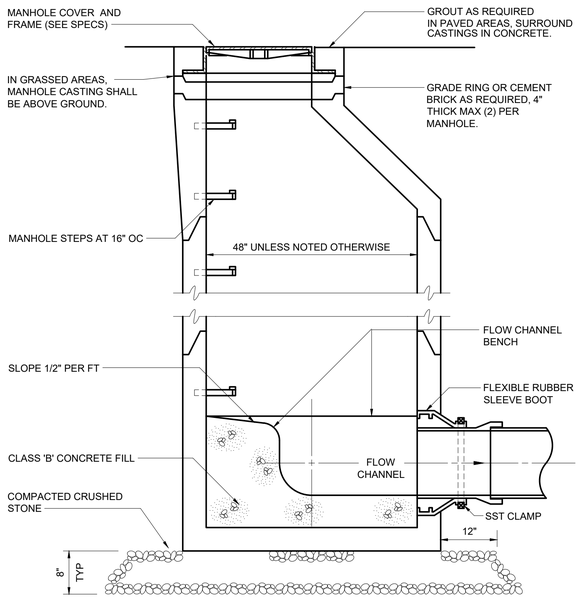

MANHOLE SECTION

C-33-0601

OVERFLOW AND GALLERY DRAIN STRUCTURE TABLE

STRUCTURE TABLE				
STRUCTURE ID:	NORTHING	EASTING	DETAIL DWG	INNER DIMENSION (INCHES)
OF MH-01	813680.50	707691.90	C-234	96
OF MH-02	813680.50	707817.92	C-234	96
OF MH-03	813811.27	707817.92	C-234	96
GD MH-5	813659.51	707713.88	C-234	48
GD MH-3	813798.91	707829.92	C-234	48
OF MH-04	813811.25	707866.55	C-234	SEE DETAIL
GD MH-2	813798.55	707879.18	C-234	60
GD MH-1	813873.90	707927.78	C-234	60
OF MH-05	813533.32	707791.04	C-234	96
GD MH-4	813664.47	707829.92	C-234	60
OF MH-06	813533.32	707822.91	C-234	96

SANITARY SEWER STRUCTURE TABLE

STRUCTURE TABLE				
STRUCTURE ID:	NORTHING	EASTING	DETAIL DWG	INNER DIMENSION (INCHES)
SAN MH-2	813517.97	707836.56	M-503 & M-504	60
SAN MH-1	813449.64	707817.48	C-234	72

WARNING
IT IS A VIOLATION OF SECTION 7209.2 OF THE NEW YORK STATE EDUCATION LAW FOR ANY PERSON, UNLESS ACTING UNDER THE DIRECTION OF A LICENSED PROFESSIONAL ENGINEER, TO ALTER IN ANY WAY PLANS, SPECIFICATIONS, PLATS OR REPORTS TO WHICH THE SEAL OF A PROFESSIONAL ENGINEER HAS BEEN APPLIED. IF AN ITEM BEARING THE SEAL OF A PROFESSIONAL ENGINEER IS ALTERED, THE ALTERING ENGINEER SHALL AFFIX TO THE ITEM HIS SEAL AND THE NOTATION "ALTERED BY" FOLLOWED BY HIS SIGNATURE, THE DATE, AND A SPECIFIC DESCRIPTION OF THE ALTERATION.

REV	ISSUED FOR	DATE	BY

PROJECT ENGINEER: R. FROST
DESIGNED BY: J. TANNER
DRAWN BY: J. TANNER
CHECKED BY: D. SHEERAN
IF THIS BAR DOES NOT MEASURE 1" THEN DRAWING IS NOT TO FULL SCALE 0 1/2" 1"

BID SET

DANIEL JAMES SHEERAN — STATE OF NEW YORK — 088955 — LICENSED PROFESSIONAL ENGINEER

Hazen
HAZEN AND SAWYER
498 SEVENTH AVENUE, 11th FLOOR
NEW YORK, NEW YORK 10018

WESTCHESTER JOINT WATER WORKS
MAMARONECK, NY

RYE LAKE WATER FILTRATION PLANT
HARRISON, NY

CIVIL
SANITARY AND STORM DRAIN DETAILS

DATE: FEB 2025
HAZEN NO.: 90388-000
CONTRACT NO.: A1364-A
DRAWING NUMBER: C-234

File: C:\USERS\JTANNER\DOCUMENTS\ACCDOCS\HAZEN AND SAWYER\90388-000_RYE_LAKE_FILTRATION\PROJECT FILES\PROJECTWISE\CIVIL\C-234 Saved by JTANNER Save date: 2/12/2025 11:54 AM
PLOT DATE: 2/26/2025 11:53 PM BY: JTANNER

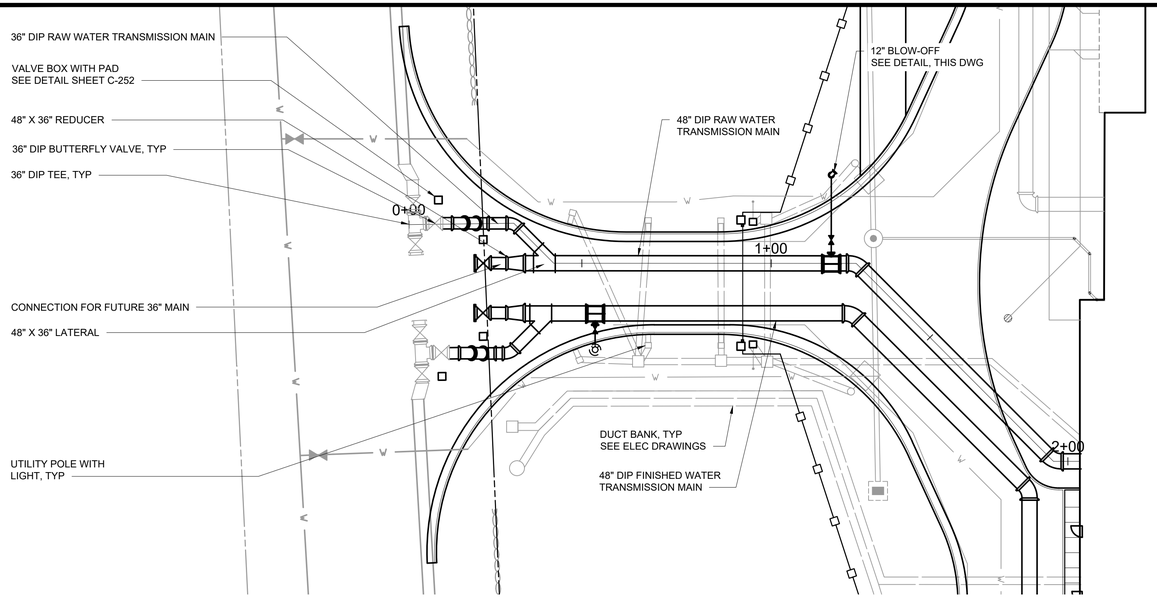

PLAN

SCALE: 1" = 20'

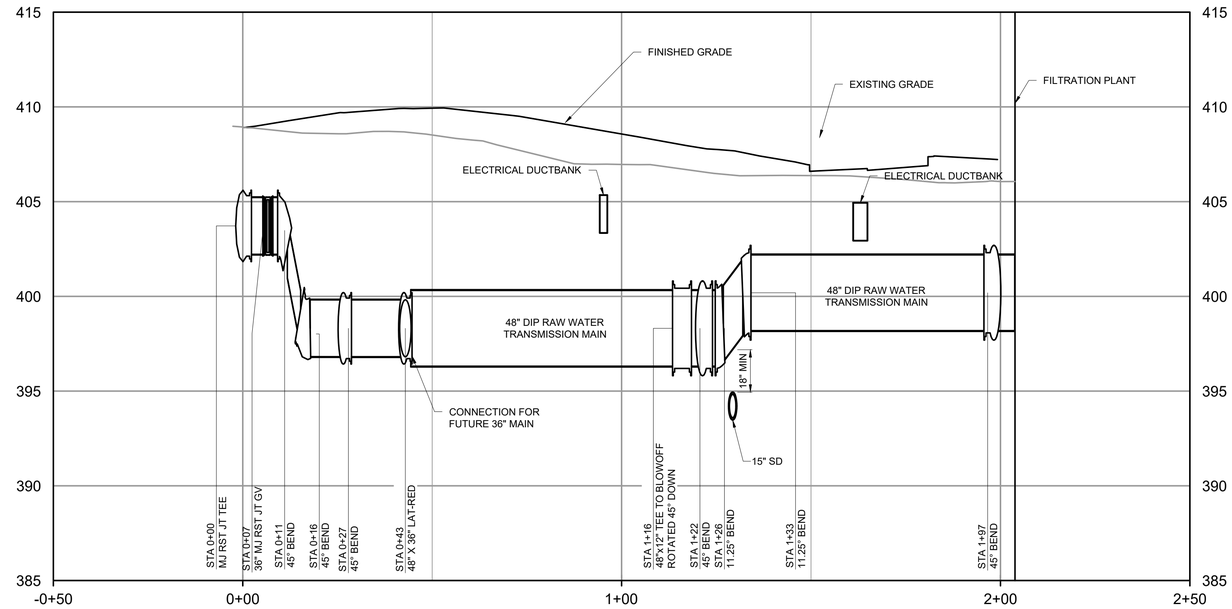

PROFILE

HORIZONTAL SCALE: 1" = 20'
VERTICAL SCALE: 1"=4'

NOTES:

1. ALL VALVES SHALL BE GATE UNLESS OTHERWISE NOTED.
2. GATE VALVES ON TRANSMISSION MAINS SHALL BE INSTALLED HORIZONTALLY. SEE DETAIL SHEET C-252.
3. CONTRACTOR SHALL PROVIDE ADEQUATE THRUST BLOCKING OR JOINT RESTRAINT TO PROTECT EXISTING TRANSMISSION MAIN. BYPASS LINE SHALL BE 36".
4. ALL DIP SHALL BE SPECIAL THICKNESS CLASS 53 WITH MECHANICAL JOINT FITTINGS AND RESTRAINED JOINTS GLANDS. ALL JOINTS SHALL BE RESTRAINED. ALL DIP PIPES SHALL BE DOUBLE CEMENT LINED ON THE INSIDE.
5. THE TEMPORARY 36" BUTTERFLY VALVES AND CONNECTING DIP BETWEEN THE RAW WATER AND FINISHED WATER TRANSMISSION HAVE BEEN REMOVED FOR CLARITY. SEE DRAWING C-131 FOR ADDITIONAL INFORMATION.

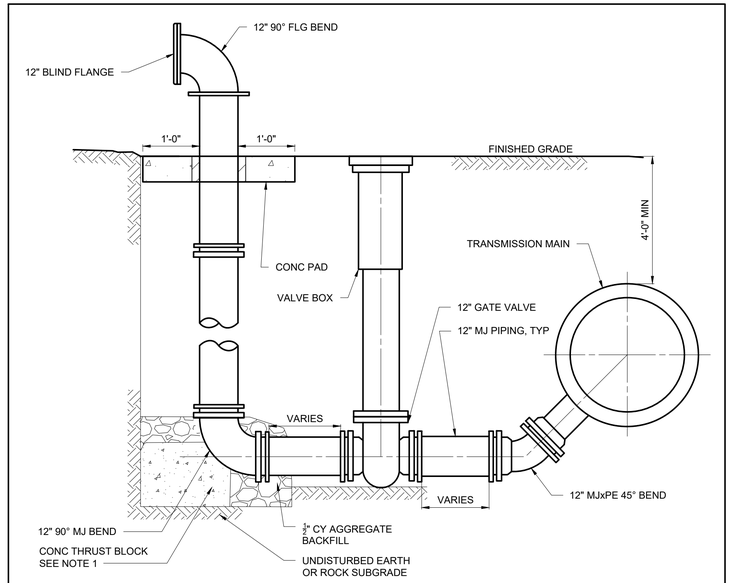

NOTES:

1. PROVIDE A MINIMUM OF 3 SF BEARING AREA.
2. ALL JOINTS TO BE RESTRAINED.
3. AFTER USE OF BLOW-OFF, SECTION OF PIPE BETWEEN 90° BEND AND VALVE SHALL BE PUMPED OUT TO MITIGATE FREEZING. BLIND FLANGE SHALL BE CONNECTED TO BEND AT ALL TIMES WHEN BLOW-OFF NOT IN USE.

12" BLOW-OFF DETAIL

NTS

HORIZONTAL SCALE: 1" = 20'
20 10 0 20'
4 2 0 4
VERTICAL SCALE: 1"=4'

WARNING
IT IS A VIOLATION OF SECTION 7209.2 OF THE NEW YORK STATE EDUCATION LAW FOR ANY PERSON, UNLESS ACTING UNDER THE DIRECTION OF A LICENSED PROFESSIONAL ENGINEER, TO ALTER IN ANY WAY PLANS, SPECIFICATIONS, PLATS OR REPORTS TO WHICH THE SEAL OF A PROFESSIONAL ENGINEER HAS BEEN APPLIED. IF AN ITEM BEARING THE SEAL OF A PROFESSIONAL ENGINEER IS ALTERED, THE ALTERING ENGINEER SHALL AFFIX TO THE ITEM HIS SEAL AND THE NOTATION "ALTERED BY" FOLLOWED BY HIS SIGNATURE, THE DATE, AND A SPECIFIC DESCRIPTION OF THE ALTERATION.

REV	ISSUED FOR	DATE	BY

PROJECT ENGINEER:	R. FROST
DESIGNED BY:	J. TANNER
DRAWN BY:	J. TANNER
CHECKED BY:	D. SHEERAN

IF THIS BAR DOES NOT MEASURE 1" THEN DRAWING IS NOT TO FULL SCALE (0 1/2" 1")

BID SET

STATE OF NEW YORK DANIEL JAMES SHEERAN 088955 LICENSED PROFESSIONAL ENGINEER

Hazen

HAZEN AND SAWYER
498 SEVENTH AVENUE, 11th FLOOR
NEW YORK, NEW YORK 10018

WESTCHESTER JOINT WATER WORKS
MAMARONECK, NY

RYE LAKE WATER FILTRATION PLANT
HARRISON, NY

CIVIL
RAW WATER TRANSMISSION MAIN
PLAN AND PROFILE

DATE:	FEB 2025
HAZEN NO.:	90388-000
CONTRACT NO.:	A1364-A
DRAWING NUMBER:	C-241

File: C:\USERS\LWALLACE\DOCACCDOCS\HAZEN AND SAWYER\90388-000_RYE_LAKE_FILTRATION\PROJECT FILES\PROJECTWISE\CIVIL\C-241 Saved by LWALLACE Save date: 3/27/2025 4:33 PM
PLOT DATE: 3/27/2025 4:38 PM BY: LWALLACE

NOTES:

1. ALL VALVES SHALL BE GATE UNLESS OTHERWISE NOTED.
2. GATE VALVES ON TRANSMISSION MAINS SHALL BE INSTALLED HORIZONTALLY. SEE DETAIL SHEET C-252.
3. CONTRACTOR SHALL PROVIDE ADEQUATE THRUST BLOCKING OR JOINT RESTRAINT TO PROTECT EXISTING TRANSMISSION MAIN. BYPASS LINE SHALL BE 36".
4. ALL DIP SHALL BE SPECIAL THICKNESS CLASS 53 WITH MECHANICAL JOINT FITTINGS AND RESTRAINED JOINTS GLANDS. ALL JOINTS SHALL BE RESTRAINED. ALL DIP PIPES SHALL BE DOUBLE CEMENT LINED ON THE INSIDE.

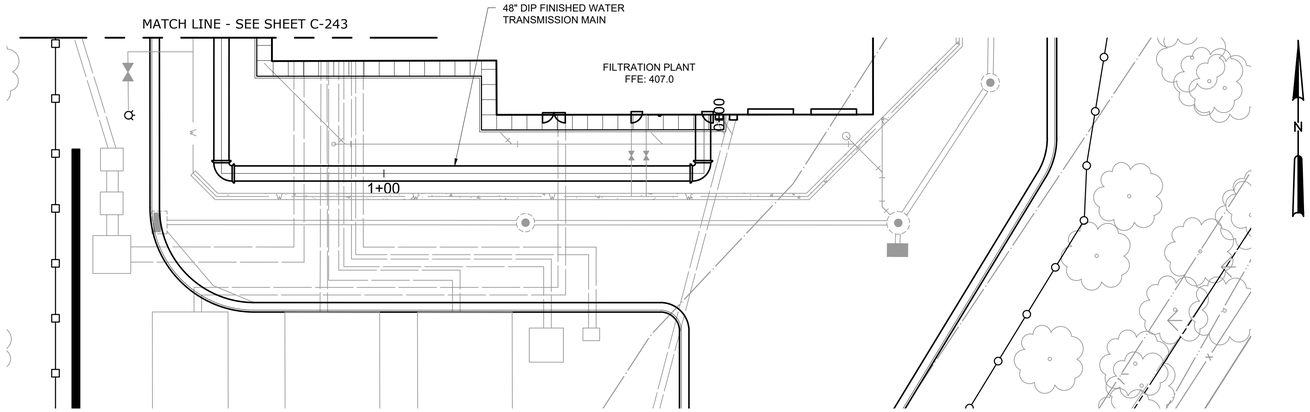

PLAN

SCALE: 1" = 20'

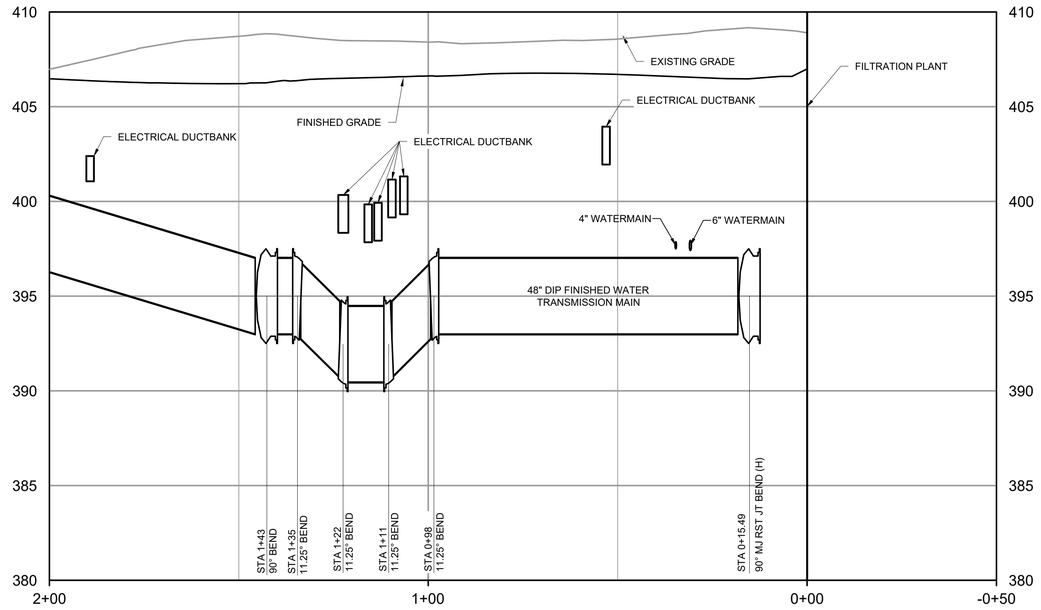

PROFILE

HORIZONTAL SCALE: 1" = 20'
VERTICAL SCALE: 1"=4'

HORIZONTAL SCALE: 1" = 20'

20 10 0 20'

4 2 0 4

VERTICAL SCALE: 1"=4'

WARNING
IT IS A VIOLATION OF SECTION 7209.2 OF THE NEW YORK STATE EDUCATION LAW FOR ANY PERSON, UNLESS ACTING UNDER THE DIRECTION OF A LICENSED PROFESSIONAL ENGINEER, TO ALTER IN ANY WAY PLANS, SPECIFICATIONS, PLATS OR REPORTS TO WHICH THE SEAL OF A PROFESSIONAL ENGINEER HAS BEEN APPLIED. IF AN ITEM BEARING THE SEAL OF A PROFESSIONAL ENGINEER IS ALTERED, THE ALTERING ENGINEER SHALL AFFIX TO THE ITEM HIS SEAL AND THE NOTATION "ALTERED BY" FOLLOWED BY HIS SIGNATURE, THE DATE, AND A SPECIFIC DESCRIPTION OF THE ALTERATION.

REV	ISSUED FOR	DATE	BY

PROJECT ENGINEER:	R. FROST
DESIGNED BY:	J. TANNER
DRAWN BY:	M. SEEBOLD
CHECKED BY:	D. SHEERAN
IF THIS BAR DOES NOT MEASURE 1" THEN DRAWING IS NOT TO FULL SCALE	0 1/2" 1"

BID SET

STATE OF NEW YORK · DANIEL JAMES SHEERAN · 088955 · LICENSED PROFESSIONAL ENGINEER

Hazen

HAZEN AND SAWYER
498 SEVENTH AVENUE, 11th FLOOR
NEW YORK, NEW YORK 10018

WESTCHESTER JOINT WATER WORKS
MAMARONECK, NY

RYE LAKE WATER FILTRATION PLANT
HARRISON, NY

CIVIL
FINISHED WATER TRANSMISSION MAIN PLAN AND PROFILE - SHEET 1 OF 2

DATE:	FEB 2025
HAZEN NO.:	90388-000
CONTRACT NO.:	A1364-A
DRAWING NUMBER:	C-242

File: C:\USERS\LWALLACE\D\CAC\DOCS\HAZEN AND SAWYER\90388-000_RYE_LAKE_FILTRATION\PROJECT FILES\PROJECTWISE\CIVIL\C-242 Saved by JTANNER Save date: 2/10/2025 3:01 PM
PLOT DATE: 3/27/2025 2:25 PM BY: LWALLACE

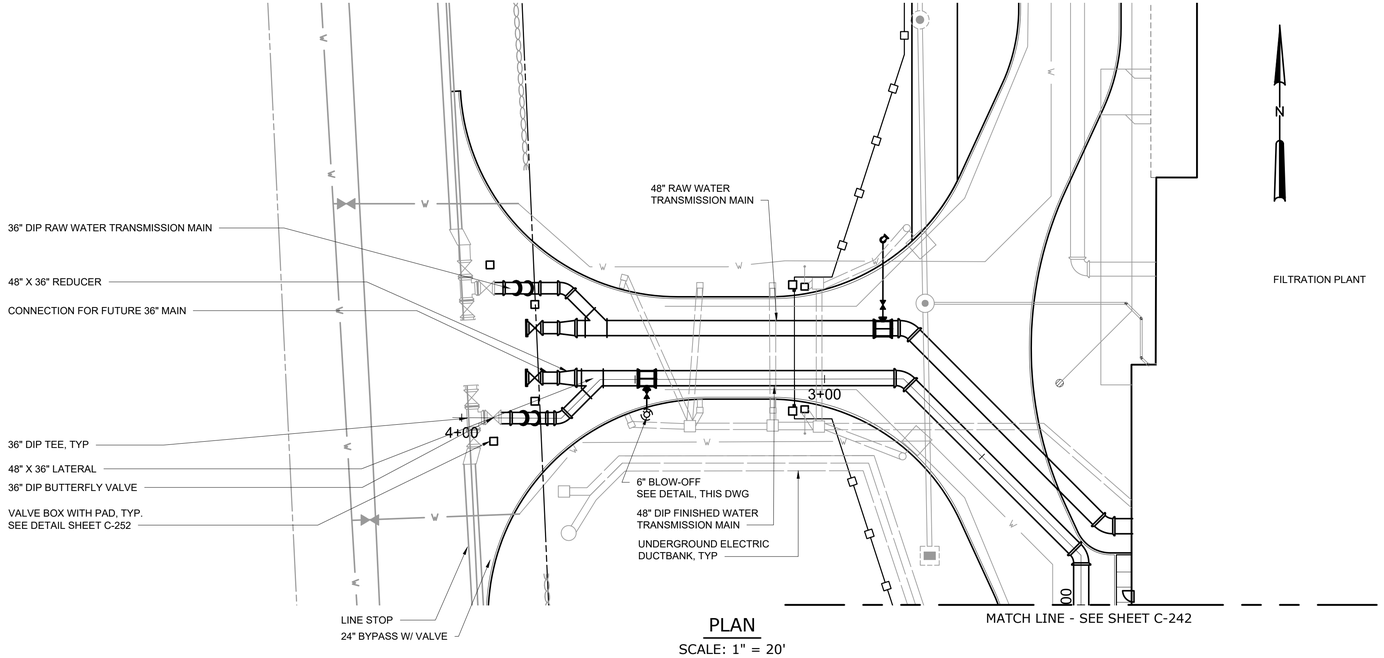

PLAN

SCALE: 1" = 20'

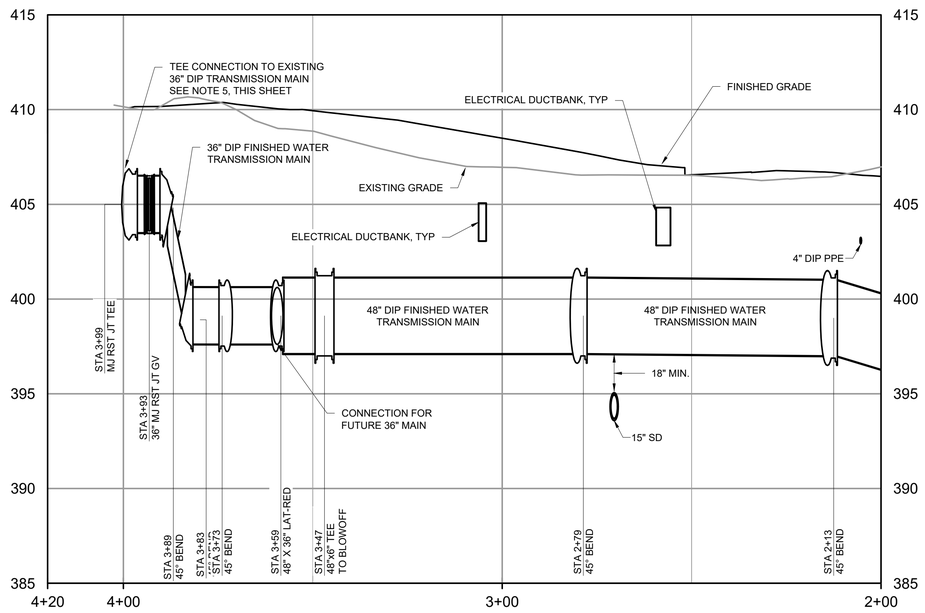

PROFILE

HORIZONTAL SCALE: 1" = 20'
VERTICAL SCALE: 1"=4'

NOTES:

1. ALL VALVES SHALL BE GATE UNLESS OTHERWISE NOTED.
2. GATE VALVES ON TRANSMISSION MAINS SHALL BE INSTALLED HORIZONTALLY. SEE DETAIL SHEET C-252.
3. CONTRACTOR SHALL PROVIDE ADEQUATE THRUST BLOCKING OR JOINT RESTRAINT TO PROTECT EXISTING TRANSMISSION MAIN. BYPASS LINE SHALL BE 36".
4. ALL DIP SHALL BE SPECIAL THICKNESS CLASS 53 WITH MECHANICAL JOINT FITTINGS AND RESTRAINED JOINTS GLANDS. ALL JOINTS SHALL BE RESTRAINED. ALL DIP PIPES SHALL BE DOUBLE CEMENT LINED ON THE INSIDE.
5. SEE YARD PIPING PLAN C-131 FOR LINESTOP AND BYPASS REQUIREMENTS FOR CONNECTION TO EXISTING 36" TRANSMISSION MAIN.
6. THE TEMPORARY 36" BUTTERFLY VALVES AND CONNECTING DIP BETWEEN THE RAW WATER AND FINISHED WATER TRANSMISSION HAVE BEEN REMOVED FOR CLARITY. SEE DRAWING C-131 FOR ADDITIONAL INFORMATION.

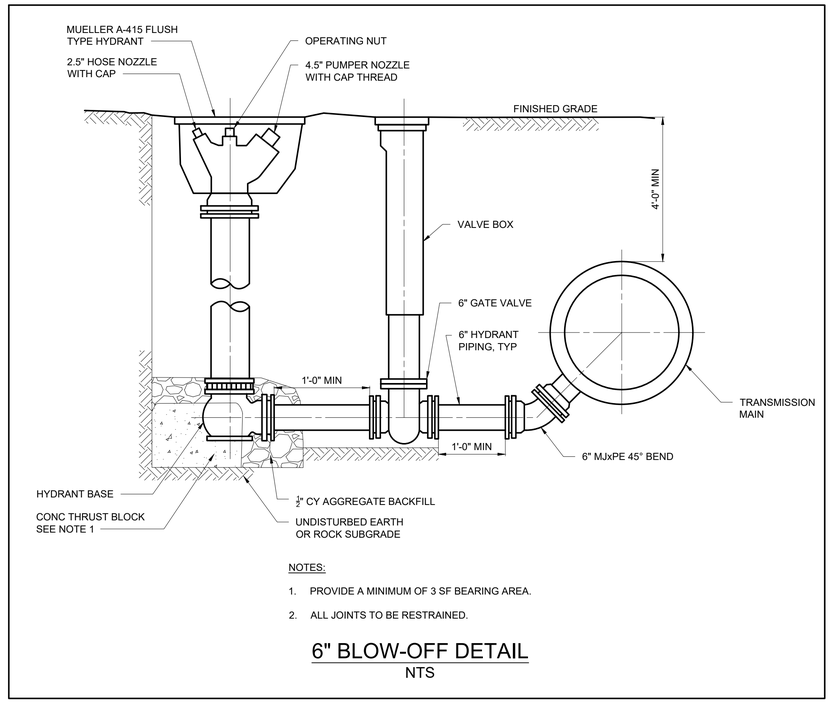

NOTES:

1. PROVIDE A MINIMUM OF 3 SF BEARING AREA.
2. ALL JOINTS TO BE RESTRAINED.

6" BLOW-OFF DETAIL

NTS

HORIZONTAL SCALE: 1" = 20'

20 10 0 20'

4 2 0 4

VERTICAL SCALE: 1"=4'

WARNING
IT IS A VIOLATION OF SECTION 7209.2 OF THE NEW YORK STATE EDUCATION LAW FOR ANY PERSON, UNLESS ACTING UNDER THE DIRECTION OF A LICENSED PROFESSIONAL ENGINEER, TO ALTER IN ANY WAY PLANS, SPECIFICATIONS, PLATS OR REPORTS TO WHICH THE SEAL OF A PROFESSIONAL ENGINEER HAS BEEN APPLIED. IF AN ITEM BEARING THE SEAL OF A PROFESSIONAL ENGINEER IS ALTERED, THE ALTERING ENGINEER SHALL AFFIX TO THE ITEM HIS SEAL AND THE NOTATION "ALTERED BY" FOLLOWED BY HIS SIGNATURE, THE DATE, AND A SPECIFIC DESCRIPTION OF THE ALTERATION.

REV	ISSUED FOR	DATE	BY

PROJECT ENGINEER:	R. FROST
DESIGNED BY:	J. TANNER
DRAWN BY:	M. SEEBOLD
CHECKED BY:	D. SHEERAN

IF THIS BAR DOES NOT MEASURE 1" THEN DRAWING IS NOT TO FULL SCALE (0, 1/2", 1")

BID SET

STATE OF NEW YORK — JAMES SHEERAN — 088955 — LICENSED PROFESSIONAL ENGINEER

Hazen

HAZEN AND SAWYER
498 SEVENTH AVENUE, 11th FLOOR
NEW YORK, NEW YORK 10018

WESTCHESTER JOINT WATER WORKS
MAMARONECK, NY

RYE LAKE WATER FILTRATION PLANT
HARRISON, NY

CIVIL
FINISHED WATER TRANSMISSION MAIN PLAN AND PROFILE - SHEET 2 OF 2

DATE:	FEB 2025
HAZEN NO.:	90388-000
CONTRACT NO.:	A1364-A
DRAWING NUMBER:	C-243

File: C:\USERS\LWALLACE\DOCACCDOCS\HAZEN AND SAWYER\90388-000_RYE_LAKE_FILTRATION\PROJECT FILES\PROJECTWISE\CIVIL\C-243 Saved by JTANNER Save date: 3/27/2025 4:00 PM
PLOT DATE: 3/27/2025 4:36 PM BY: LWALLACE

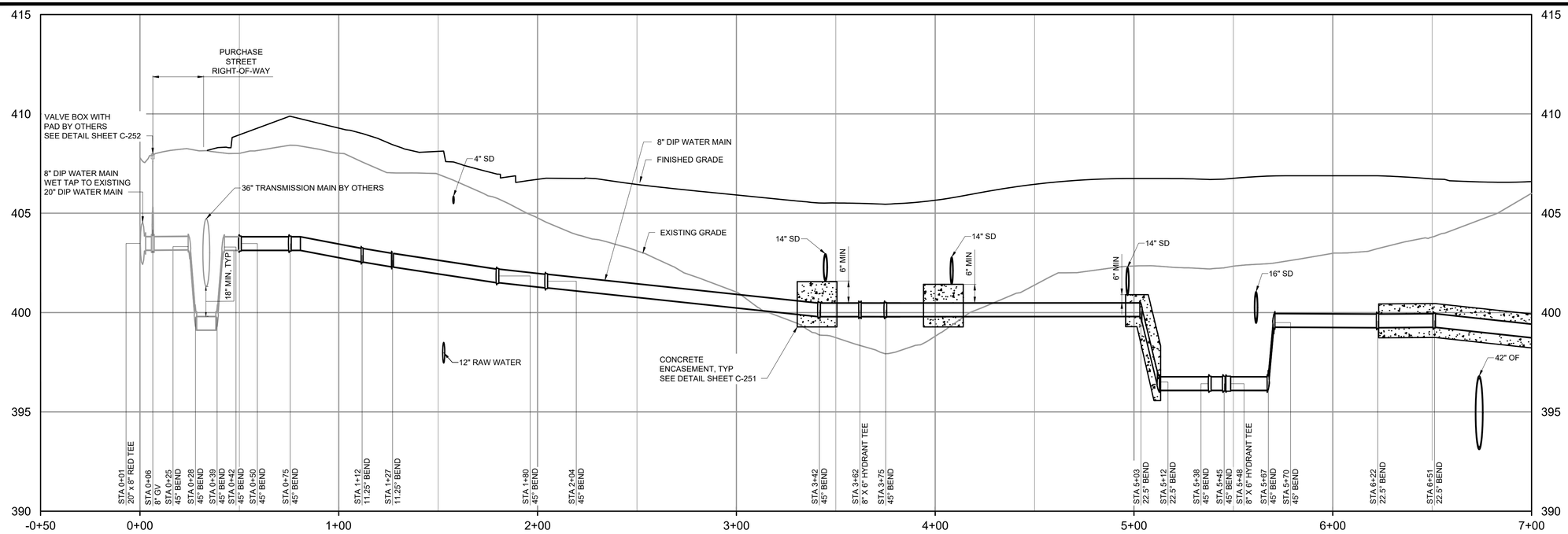

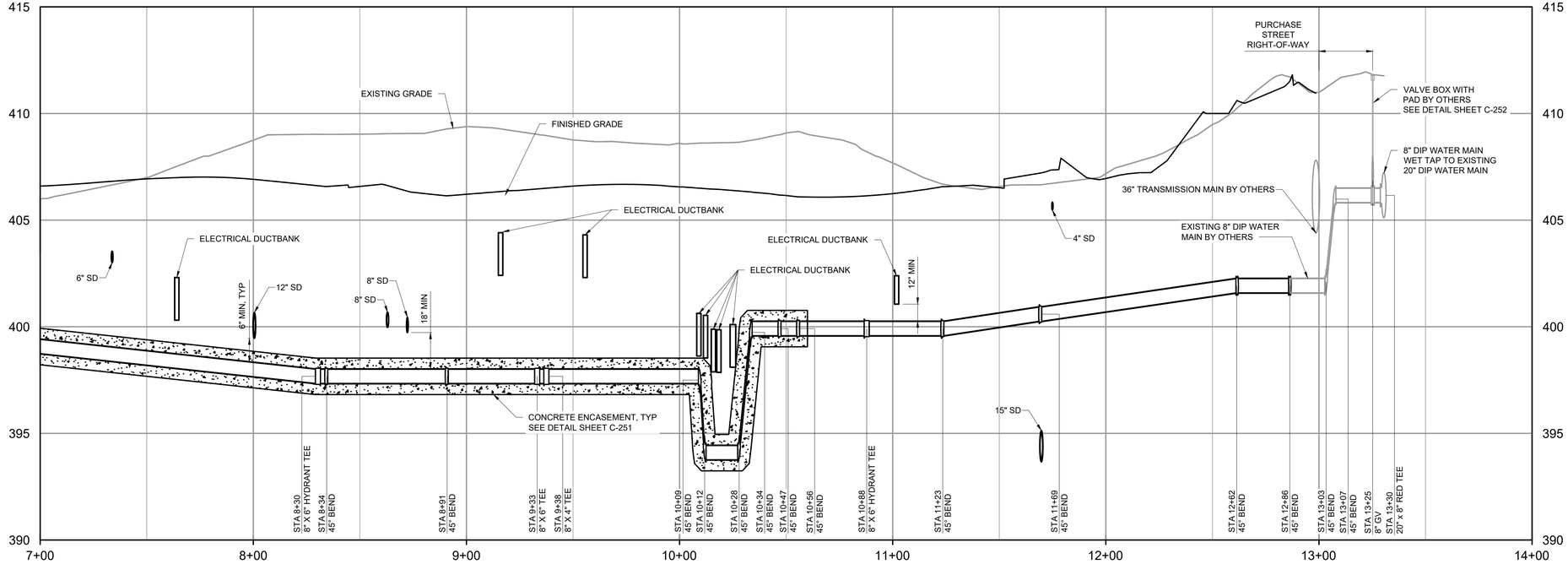

WARNING
IT IS A VIOLATION OF SECTION 7209.2 OF THE NEW YORK STATE EDUCATION LAW FOR ANY PERSON, UNLESS ACTING UNDER THE DIRECTION OF A LICENSED PROFESSIONAL ENGINEER, TO ALTER IN ANY WAY PLANS, SPECIFICATIONS, PLATS OR REPORTS TO WHICH THE SEAL OF A PROFESSIONAL ENGINEER HAS BEEN APPLIED. IF AN ITEM BEARING THE SEAL OF A PROFESSIONAL ENGINEER IS ALTERED, THE ALTERING ENGINEER SHALL AFFIX TO THE ITEM HIS SEAL AND THE NOTATION "ALTERED BY" FOLLOWED BY HIS SIGNATURE, THE DATE, AND A SPECIFIC DESCRIPTION OF THE ALTERATION.

WATER MAIN EXTENSION PROFILE

HORIZONTAL SCALE: 1"= 30'
VERTICAL SCALE: 1"= 4'

HORIZONTAL SCALE: 1" = 30'
30 15 0 30'
4 2 0 4
VERTICAL SCALE: 1"=4'

REV	ISSUED FOR	DATE	BY

PROJECT ENGINEER:	R. FROST
DESIGNED BY:	J. TANNER
DRAWN BY:	J. TANNER
CHECKED BY:	D. SHEERAN
IF THIS BAR DOES NOT MEASURE 1" THEN DRAWING IS NOT TO FULL SCALE	0 1/2" 1"

BID SET

STATE OF NEW YORK DANIEL JAMES SHEERAN 088955 LICENSED PROFESSIONAL ENGINEER

Hazen
HAZEN AND SAWYER
498 SEVENTH AVENUE, 11th FLOOR
NEW YORK, NEW YORK 10018

WESTCHESTER JOINT WATER WORKS
MAMARONECK, NY

RYE LAKE WATER FILTRATION PLANT
HARRISON, NY

CIVIL
WATER MAIN EXTENSION PROFILE

DATE:	FEB 2025
HAZEN NO.:	90388-000
CONTRACT NO.:	A1364-A
DRAWING NUMBER:	C-244

File: C:\USERS\JTANNER\DCACDOCS\HAZEN AND SAWYER\90388-000_RYE_LAKE_FILTRATION\PROJECT FILES\PROJECTWISE\CIVIL\C-244 Saved by JTANNER Save date: 3/27/2025 10:55 AM
PLOT DATE: 3/27/2025 10:56 AM BY: JTANNER

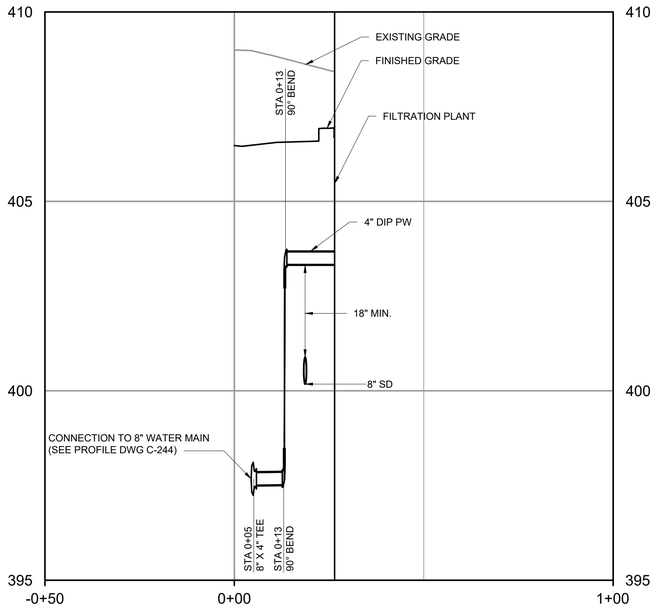

POTABLE WATER (PW) PROFILE

HORIZONTAL SCALE: 1"= 20'
VERTICAL SCALE: 1"= 2'

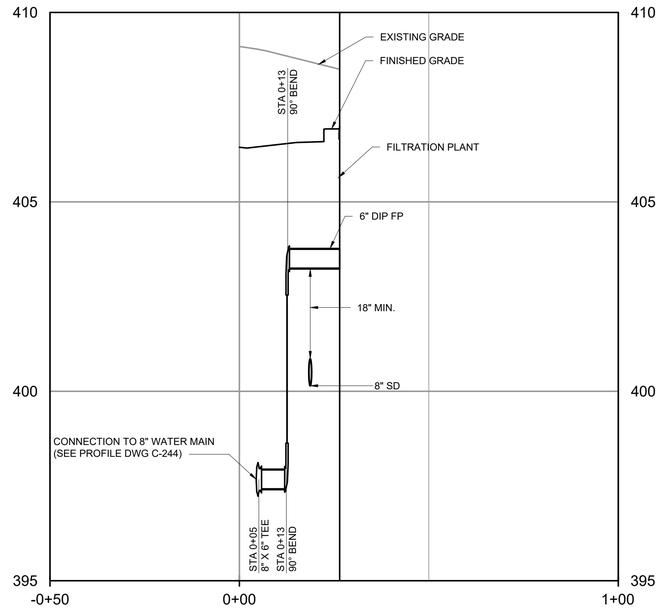

FIRE PROTECTION SERVICE (FP) PROFILE

HORIZONTAL SCALE: 1"= 20'
VERTICAL SCALE: 1"= 2'

HORIZONTAL SCALE: 1" = 20'
20 10 0 20'
2 1 0 2
VERTICAL SCALE: 1"=2'

WARNING
IT IS A VIOLATION OF SECTION 7209.2 OF THE NEW YORK STATE EDUCATION LAW FOR ANY PERSON, UNLESS ACTING UNDER THE DIRECTION OF A LICENSED PROFESSIONAL ENGINEER, TO ALTER IN ANY WAY PLANS, SPECIFICATIONS, PLATS OR REPORTS TO WHICH THE SEAL OF A PROFESSIONAL ENGINEER HAS BEEN APPLIED. IF AN ITEM BEARING THE SEAL OF A PROFESSIONAL ENGINEER IS ALTERED, THE ALTERING ENGINEER SHALL AFFIX TO THE ITEM HIS SEAL AND THE NOTATION "ALTERED BY" FOLLOWED BY HIS SIGNATURE, THE DATE, AND A SPECIFIC DESCRIPTION OF THE ALTERATION.

REV	ISSUED FOR	DATE	BY

PROJECT ENGINEER:	R. FROST
DESIGNED BY:	J. TANNER
DRAWN BY:	J. TANNER
CHECKED BY:	D. SHEERAN
IF THIS BAR DOES NOT MEASURE 1" THEN DRAWING IS NOT TO FULL SCALE	0 1/2" 1"

BID SET

STATE OF NEW YORK
DANIEL JAMES SHEERAN
088955
LICENSED PROFESSIONAL ENGINEER

Hazen

HAZEN AND SAWYER
498 SEVENTH AVENUE, 11th FLOOR
NEW YORK, NEW YORK 10018

WESTCHESTER JOINT WATER WORKS
MAMARONECK, NY

RYE LAKE WATER FILTRATION PLANT
HARRISON, NY

CIVIL
PW AND FP PROFILES

DATE:	FEB 2025
HAZEN NO.:	90388-000
CONTRACT NO.:	A1364-A
DRAWING NUMBER:	C-245

File: C:\USERS\JTANNER\DC\ACCDOCS\HAZEN AND SAWYER\90388-000_RYE_LAKE_FILTRATION\PROJECT FILES\PROJECTWISE\CIVIL\C-245 Saved by JTANNER Save date: 2/10/2025 10:51 AM
PLOT DATE: 3/27/2025 12:02 AM BY: JTANNER

NOTES:

1. FOR PLAN INFORMATION SEE DWG C-131

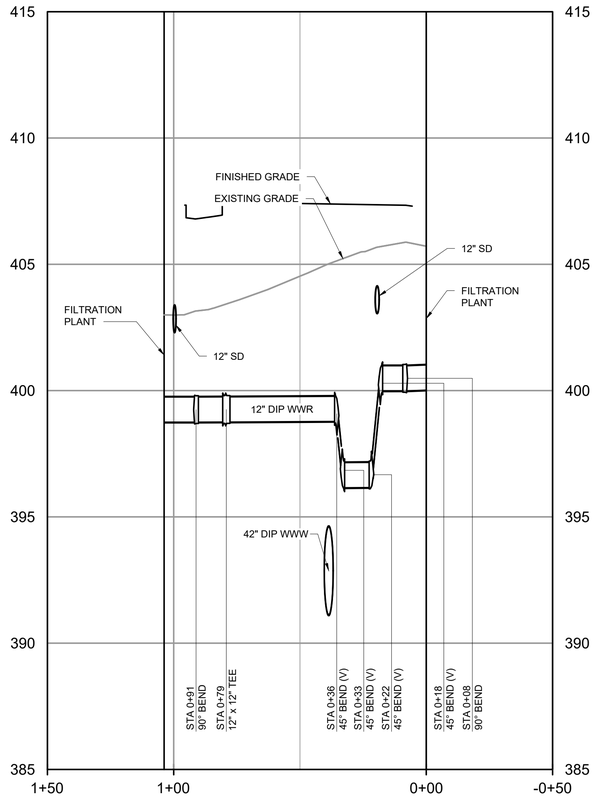

WASHWATER RECYLE (WWR) PROFILE

HORIZONTAL SCALE: 1"= 30'
VERTICAL SCALE: 1"= 3'

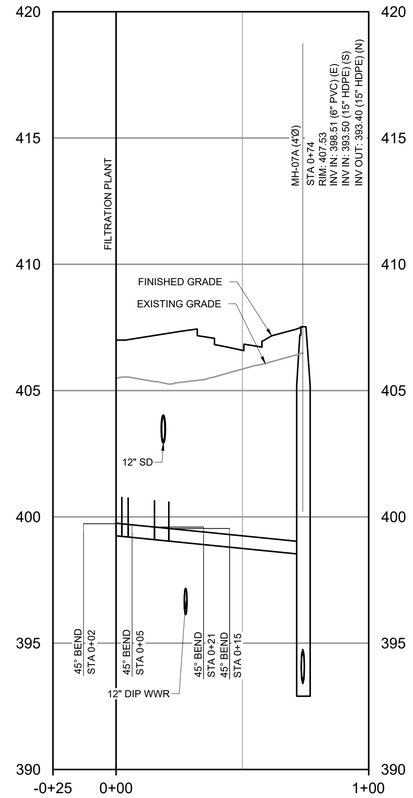

FOUNDATION UNDERDRAIN PROFILE

HORIZONTAL SCALE: 1"= 30'
VERTICAL SCALE: 1"= 3'

WARNING
IT IS A VIOLATION OF SECTION 7209.2 OF THE NEW YORK STATE EDUCATION LAW FOR ANY PERSON, UNLESS ACTING UNDER THE DIRECTION OF A LICENSED PROFESSIONAL ENGINEER, TO ALTER IN ANY WAY PLANS, SPECIFICATIONS, PLATS OR REPORTS TO WHICH THE SEAL OF A PROFESSIONAL ENGINEER HAS BEEN APPLIED. IF AN ITEM BEARING THE SEAL OF A PROFESSIONAL ENGINEER IS ALTERED, THE ALTERING ENGINEER SHALL AFFIX TO THE ITEM HIS SEAL AND THE NOTATION "ALTERED BY" FOLLOWED BY HIS SIGNATURE, THE DATE, AND A SPECIFIC DESCRIPTION OF THE ALTERATION.

HORIZONTAL SCALE: 1" = 30'

30 15 0 30'

3 1.5 0 3

VERTICAL SCALE: 1"=3'

REV	ISSUED FOR	DATE	BY

PROJECT ENGINEER:	R. FROST
DESIGNED BY:	J. TANNER
DRAWN BY:	J. TANNER
CHECKED BY:	D. SHEERAN

IF THIS BAR DOES NOT MEASURE 1" THEN DRAWING IS NOT TO FULL SCALE 0 1/2" 1"

BID SET

STATE OF NEW YORK DANIEL JAMES SHEERAN 088955 LICENSED PROFESSIONAL ENGINEER

Hazen

HAZEN AND SAWYER
498 SEVENTH AVENUE, 11th FLOOR
NEW YORK, NEW YORK 10018

WESTCHESTER JOINT WATER WORKS
MAMARONECK, NY

RYE LAKE WATER FILTRATION PLANT
HARRISON, NY

CIVIL
WWR AND FUD PROFILE

DATE:	FEB 2025
HAZEN NO.:	90388-000
CONTRACT NO.:	A1364-A
DRAWING NUMBER:	C-246

File: C:\USERS\JTANNER\DOCACCDOCS\HAZEN AND SAWYER\90388-000_RYE_LAKE_FILTRATION\PROJECT FILES\PROJECTWISE\CIVIL\C-246 Saved by JTANNER Save date: 3/27/2025 11:13 AM
PLOT DATE: 3/27/2025 11:13 AM BY: JTANNER

NOTES:

1. STREAM CENTERLINE IS LOCATED 260 FT FROM OVERFLOW OUTFALL.
2. PROVIDE REMOVABLE 24 MESH SSTL SCREEN TO OUTFALL PIPE.

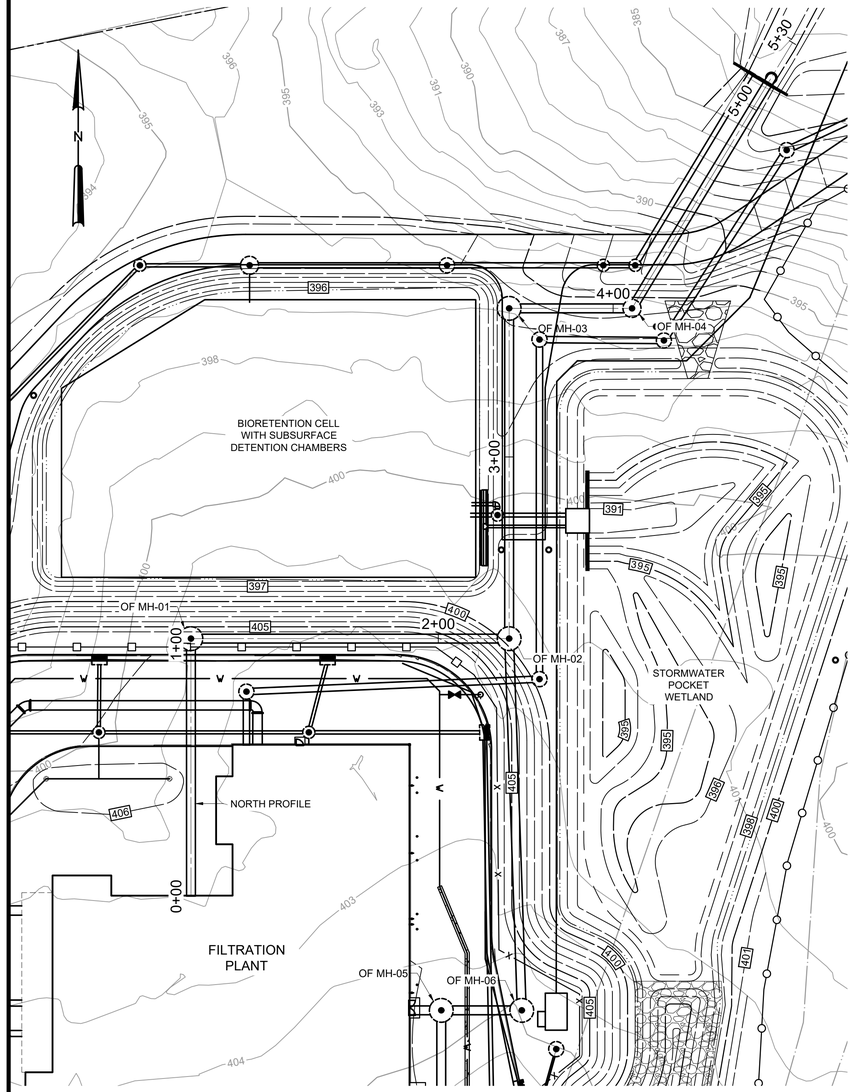

PLAN
SCALE: 1" = 30'

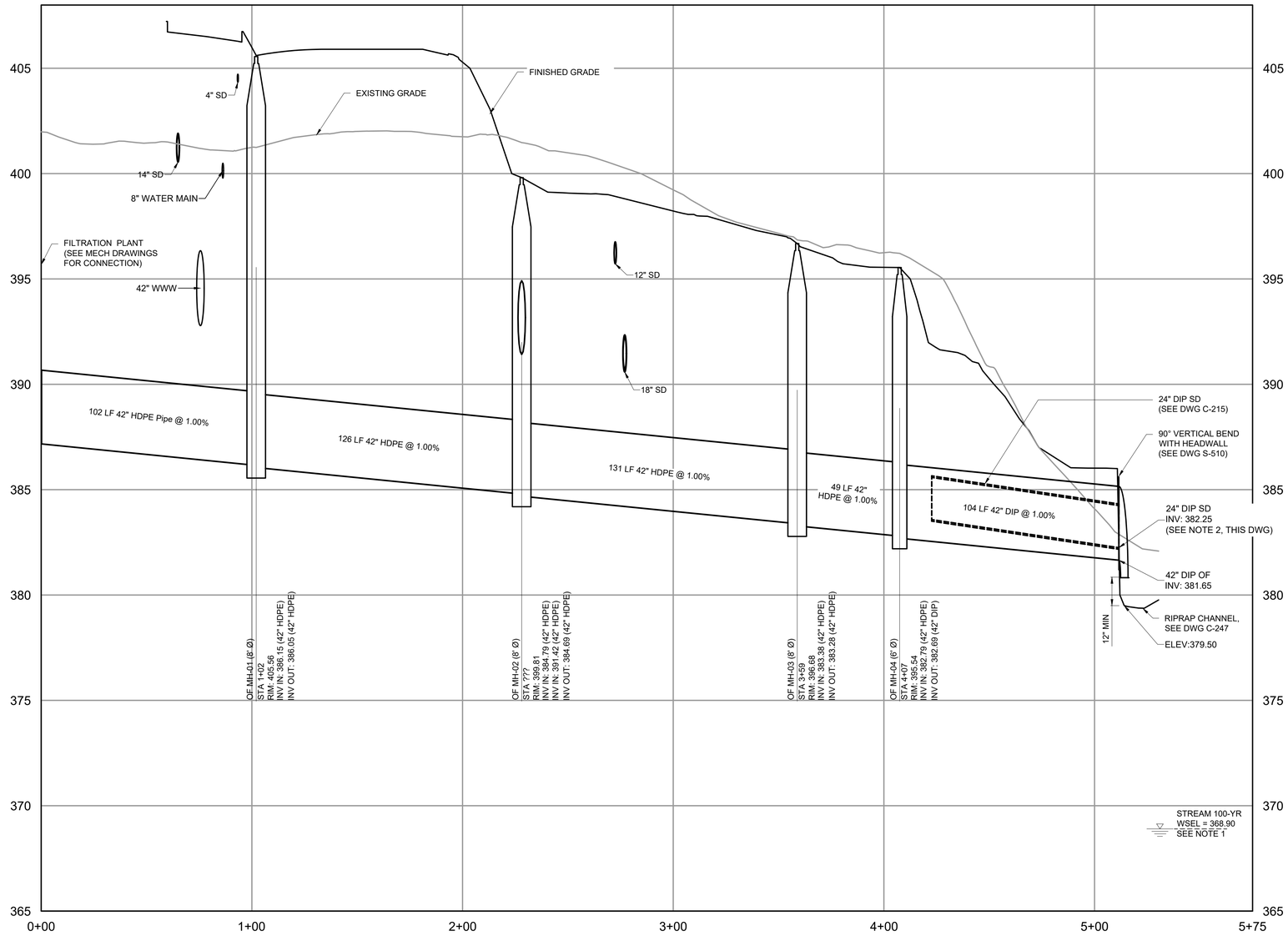

PROFILE - NORTH
HORIZONTAL SCALE: 1" = 30'
VERTICAL SCALE: 1"= 3'

HORIZONTAL SCALE: 1" = 30'
30 15 0 30'
3 1.5 0 3
VERTICAL SCALE: 1"=3'

WARNING
IT IS A VIOLATION OF SECTION 7209.2 OF THE NEW YORK STATE EDUCATION LAW FOR ANY PERSON, UNLESS ACTING UNDER THE DIRECTION OF A LICENSED PROFESSIONAL ENGINEER, TO ALTER IN ANY WAY PLANS, SPECIFICATIONS, PLATS OR REPORTS TO WHICH THE SEAL OF A PROFESSIONAL ENGINEER HAS BEEN APPLIED. IF AN ITEM BEARING THE SEAL OF A PROFESSIONAL ENGINEER IS ALTERED, THE ALTERING ENGINEER SHALL AFFIX TO THE ITEM HIS SEAL AND THE NOTATION "ALTERED BY" FOLLOWED BY HIS SIGNATURE, THE DATE, AND A SPECIFIC DESCRIPTION OF THE ALTERATION.

REV	ISSUED FOR	DATE	BY

PROJECT ENGINEER: R. FROST
DESIGNED BY: J. TANNER
DRAWN BY: J. TANNER
CHECKED BY: D. SHEERAN
IF THIS BAR DOES NOT MEASURE 1" THEN DRAWING IS NOT TO FULL SCALE 0 1/2" 1"

BID SET

STATE OF NEW YORK · MICHAEL JAMES SHEERAN · 088955 · LICENSED PROFESSIONAL ENGINEER

Hazen
HAZEN AND SAWYER
498 SEVENTH AVENUE, 11th FLOOR
NEW YORK, NEW YORK 10018

WESTCHESTER JOINT WATER WORKS
MAMARONECK, NY

RYE LAKE WATER FILTRATION PLANT
HARRISON, NY

CIVIL
OVERFLOW PROFILE - SHEET 1 OF 2

DATE: FEB 2025
HAZEN NO.: 90388-000
CONTRACT NO.: A1364-A
DRAWING NUMBER: C-247

File: C:\USERS\LWALLACE\DOCS\DOCS\HAZEN AND SAWYER\90388-000_RYE_LAKE_FILTRATION\PROJECT FILES\PROJECTWISE\CIVIL\C-247 Saved by JTANNER Save date: 2/10/2025 3:07 PM
PLOT DATE: 3/27/2025 2:40 PM BY: LWALLACE

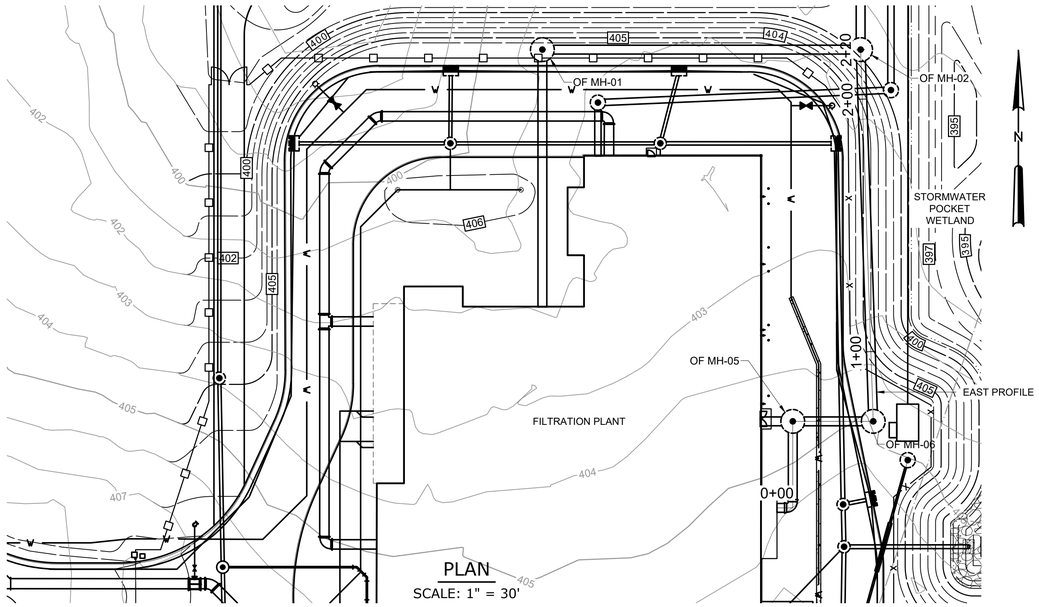

PLAN

SCALE: 1" = 30'

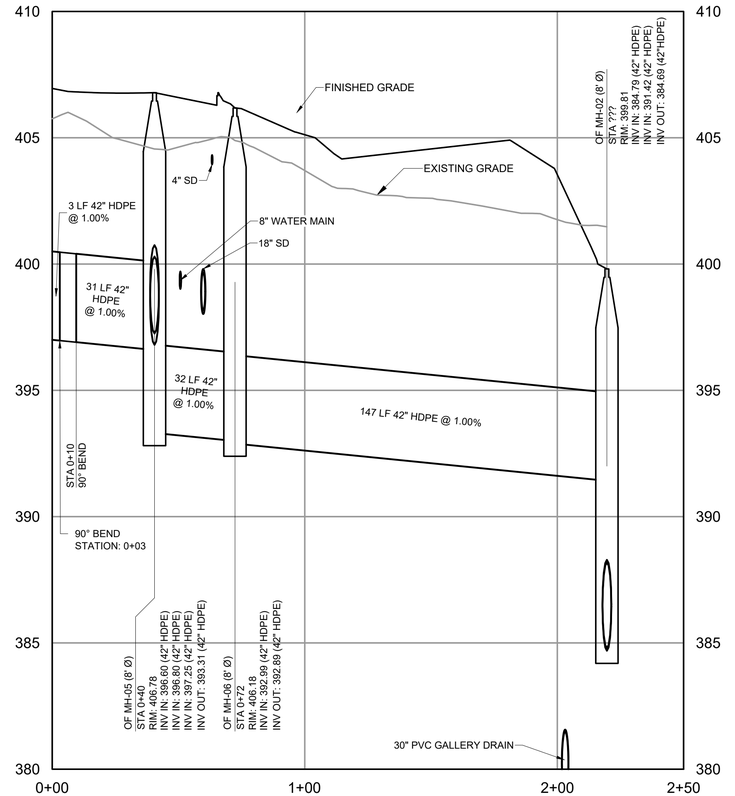

PROFILE - EAST

HORIZONTAL SCALE: 1" = 30'
VERTICAL SCALE: 1"= 3'

HORIZONTAL SCALE: 1" = 30'

30 15 0 30'

3 1.5 0 3

VERTICAL SCALE: 1"=3'

WARNING
IT IS A VIOLATION OF SECTION 7209.2 OF THE NEW YORK STATE EDUCATION LAW FOR ANY PERSON, UNLESS ACTING UNDER THE DIRECTION OF A LICENSED PROFESSIONAL ENGINEER, TO ALTER IN ANY WAY PLANS, SPECIFICATIONS, PLATS OR REPORTS TO WHICH THE SEAL OF A PROFESSIONAL ENGINEER HAS BEEN APPLIED. IF AN ITEM BEARING THE SEAL OF A PROFESSIONAL ENGINEER IS ALTERED, THE ALTERING ENGINEER SHALL AFFIX TO THE ITEM HIS SEAL AND THE NOTATION "ALTERED BY" FOLLOWED BY HIS SIGNATURE, THE DATE, AND A SPECIFIC DESCRIPTION OF THE ALTERATION.

REV	ISSUED FOR	DATE	BY

PROJECT ENGINEER:	R. FROST
DESIGNED BY:	J. TANNER
DRAWN BY:	J. TANNER
CHECKED BY:	D. SHEERAN

IF THIS BAR DOES NOT MEASURE 1" THEN DRAWING IS NOT TO FULL SCALE (0, 1/2", 1")

BID SET

STATE OF NEW YORK — JAMES SHEERAN — 088955 — LICENSED PROFESSIONAL ENGINEER

Hazen

HAZEN AND SAWYER
498 SEVENTH AVENUE, 11th FLOOR
NEW YORK, NEW YORK 10018

WESTCHESTER JOINT WATER WORKS
MAMARONECK, NY

RYE LAKE WATER FILTRATION PLANT
HARRISON, NY

CIVIL
OVERFLOW PROFILE - SHEET 2 OF 2

DATE:	FEB 2025
HAZEN NO.:	90388-000
CONTRACT NO.:	A1364-A
DRAWING NUMBER:	C-248

File: C:\USERS\LWALLACE\DC\ACCDOCS\HAZEN AND SAWYER\90388-000_RYE_LAKE_FILTRATION\PROJECT FILES\PROJECTWISE\CIVIL\C-248 Saved by JTANNER Save date: 2/10/2025 3:06 PM
PLOT DATE: 3/27/2025 3:03 PM BY: LWALLACE

NOTES:

1. FOR PLAN INFORMATION SEE DWG C-131

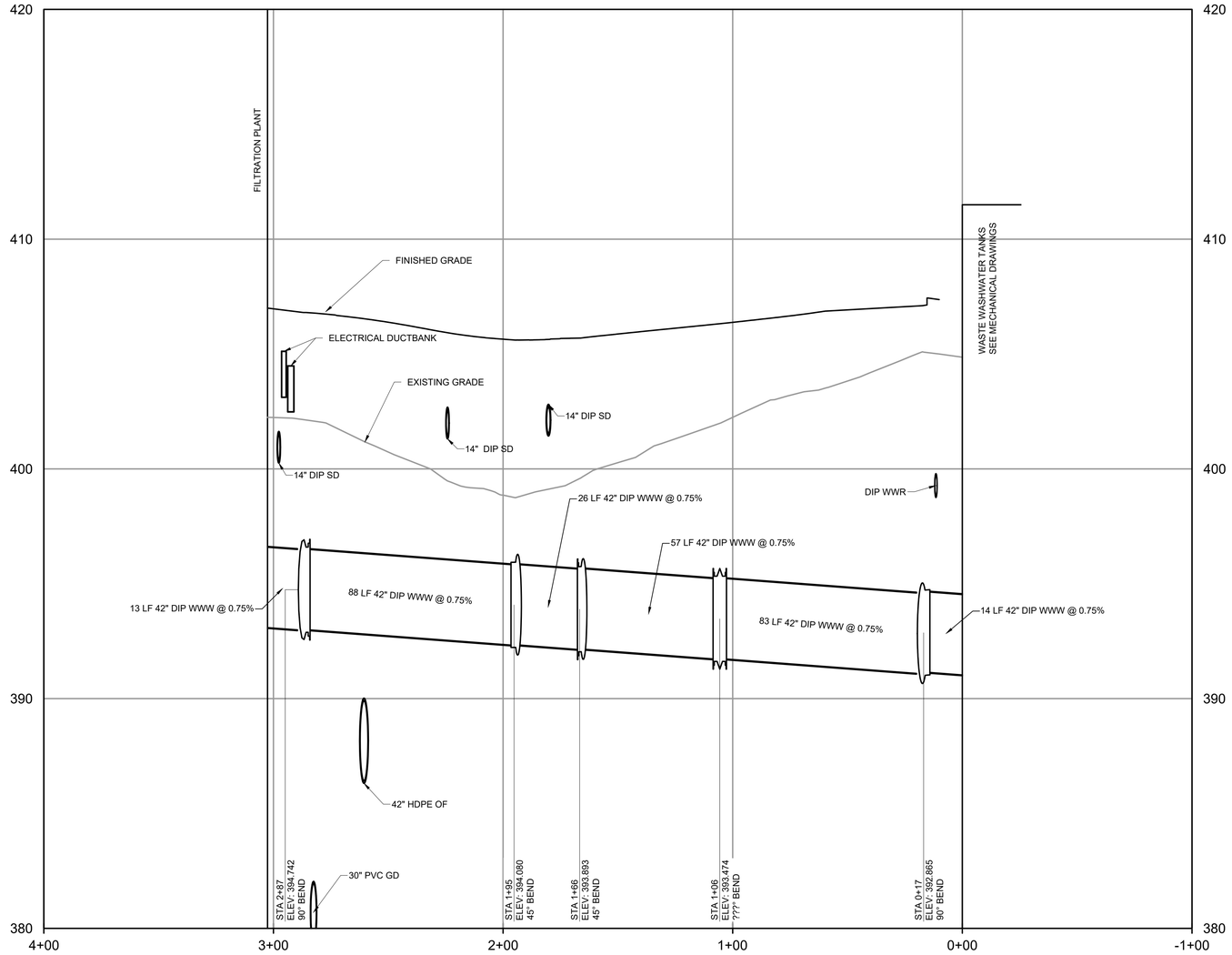

WASTE WASHWATER (WWW) PROFILE

HORIZONTAL SCALE: 1"= 30'
VERTICAL SCALE: 1"= 3'

HORIZONTAL SCALE: 1" = 30'

30 15 0 30'

3 1.5 0 3

VERTICAL SCALE: 1"=3'

WARNING
IT IS A VIOLATION OF SECTION 7209.2 OF THE NEW YORK STATE EDUCATION LAW FOR ANY PERSON, UNLESS ACTING UNDER THE DIRECTION OF A LICENSED PROFESSIONAL ENGINEER, TO ALTER IN ANY WAY PLANS, SPECIFICATIONS, PLATS OR REPORTS TO WHICH THE SEAL OF A PROFESSIONAL ENGINEER HAS BEEN APPLIED. IF AN ITEM BEARING THE SEAL OF A PROFESSIONAL ENGINEER IS ALTERED, THE ALTERING ENGINEER SHALL AFFIX TO THE ITEM HIS SEAL AND THE NOTATION "ALTERED BY" FOLLOWED BY HIS SIGNATURE, THE DATE, AND A SPECIFIC DESCRIPTION OF THE ALTERATION.

REV	ISSUED FOR	DATE	BY

PROJECT ENGINEER: R. FROST
DESIGNED BY: J. TANNER
DRAWN BY: J. TANNER
CHECKED BY: D. SHEERAN

IF THIS BAR DOES NOT MEASURE 1" THEN DRAWING IS NOT TO FULL SCALE 0 1/2" 1"

BID SET



Hazen
HAZEN AND SAWYER
498 SEVENTH AVENUE, 11th FLOOR
NEW YORK, NEW YORK 10018

WESTCHESTER JOINT WATER WORKS
MAMARONECK, NY

RYE LAKE WATER FILTRATION PLANT
HARRISON, NY

CIVIL
WWW PROFILE

DATE:	FEB 2025
HAZEN NO.:	90388-000
CONTRACT NO.:	A1364-A
DRAWING NUMBER:	C-249

File: C:\USERS\JTANNER\DCACCDOCS\HAZEN AND SAWYER\90388-000_RYE_LAKE_FILTRATION\PROJECT FILES\PROJECTWISE\CIVIL\C-249 Saved by JTANNER Save date: 2/10/2025 10:31 AM
PLOT DATE: 3/27/2025 12:03 AM BY: JTANNER

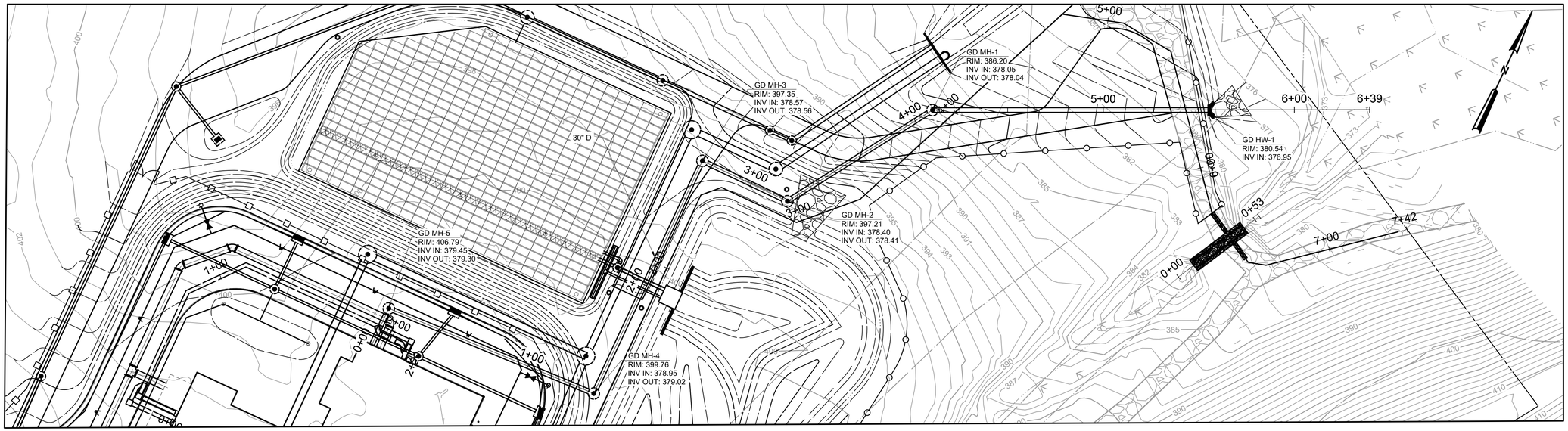

PLAN

SCALE 1" = 30'

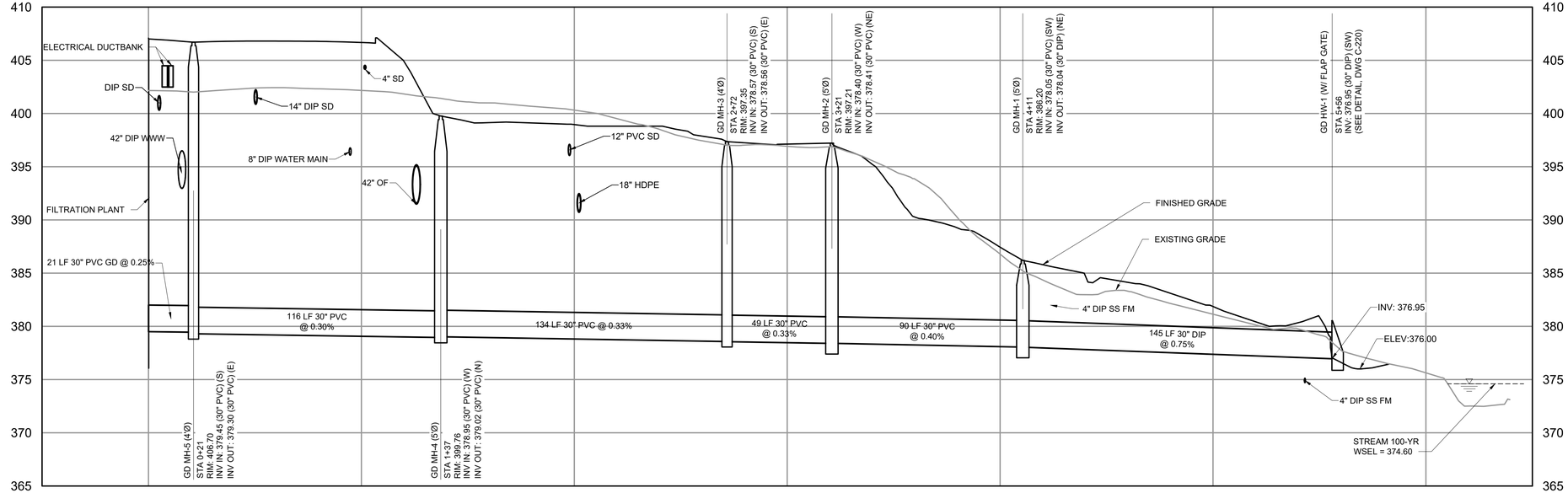

PROFILE

HORIZONTAL SCALE 1" = 30'
VERTICAL SCALE: 1" = 6'

HORIZONTAL SCALE: 1" = 30'

30 15 0 30'

6 3 0 6

VERTICAL SCALE: 1"=6'

WARNING
IT IS A VIOLATION OF SECTION 7209.2 OF THE NEW YORK STATE EDUCATION LAW FOR ANY PERSON, UNLESS ACTING UNDER THE DIRECTION OF A LICENSED PROFESSIONAL ENGINEER, TO ALTER IN ANY WAY PLANS, SPECIFICATIONS, PLATS OR REPORTS TO WHICH THE SEAL OF A PROFESSIONAL ENGINEER HAS BEEN APPLIED. IF AN ITEM BEARING THE SEAL OF A PROFESSIONAL ENGINEER IS ALTERED, THE ALTERING ENGINEER SHALL AFFIX TO THE ITEM HIS SEAL AND THE NOTATION "ALTERED BY" FOLLOWED BY HIS SIGNATURE, THE DATE, AND A SPECIFIC DESCRIPTION OF THE ALTERATION.

REV	ISSUED FOR	DATE	BY

PROJECT ENGINEER: R. FROST
DESIGNED BY: J. TANNER
DRAWN BY: J. TANNER
CHECKED BY: D. SHEERAN

IF THIS BAR DOES NOT MEASURE 1" THEN DRAWING IS NOT TO FULL SCALE 0 1/2" 1"

BID SET

DANIEL JAMES SHEERAN — STATE OF NEW YORK — 088955 — LICENSED PROFESSIONAL ENGINEER

Hazen

HAZEN AND SAWYER
498 SEVENTH AVENUE, 11th FLOOR
NEW YORK, NEW YORK 10018

WESTCHESTER JOINT WATER WORKS
MAMARONECK, NY

RYE LAKE WATER FILTRATION PLANT
HARRISON, NY

CIVIL
GALLERY DRAIN PROFILE

DATE: FEB 2025
HAZEN NO.: 90388-000
CONTRACT NO.: A1364-A
DRAWING NUMBER: C-250

File: C:\USERS\JTANNER\DCACDOCS\HAZEN AND SAWYER\90388-000_RYE_LAKE_FILTRATION\PROJECT FILES\PROJECTWISE\CIVIL\C-250.Save by JTANNER Save date: 2/10/2025 10:11 AM
PLOT DATE: 3/27/2025 11:02 AM BY: JTANNER

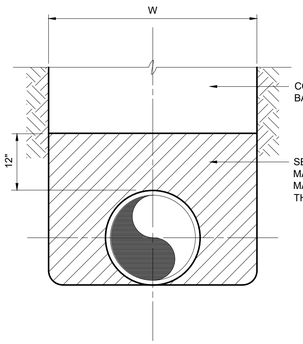

TYPE A

IN EARTH

C-01-0100

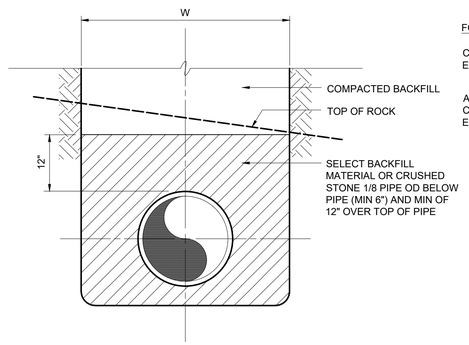

TYPE A

IN ROCK

C-01-0101

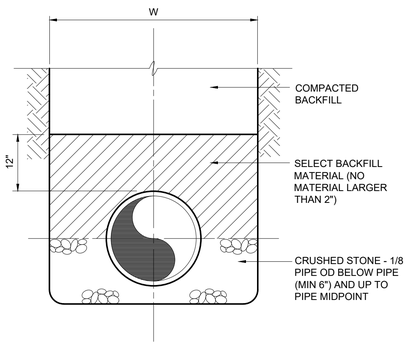

TYPE B

C-01-0102

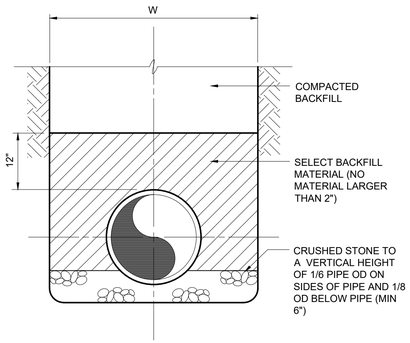

TYPE C

C-01-0103

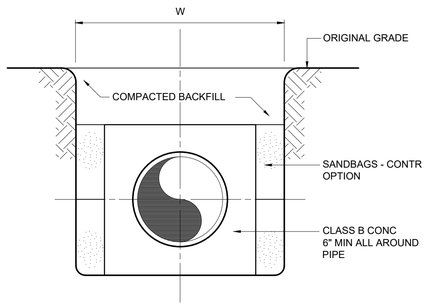

CONCRETE ENCASEMENT
(SEE NOTE 1)

C-01-0104

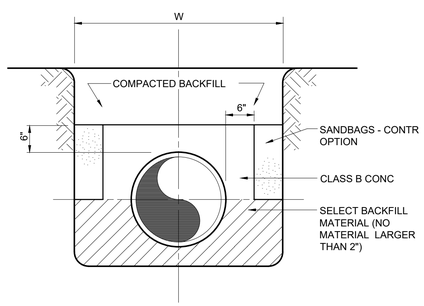

CONCRETE ARCH
(SEE NOTE 1)

C-01-0105

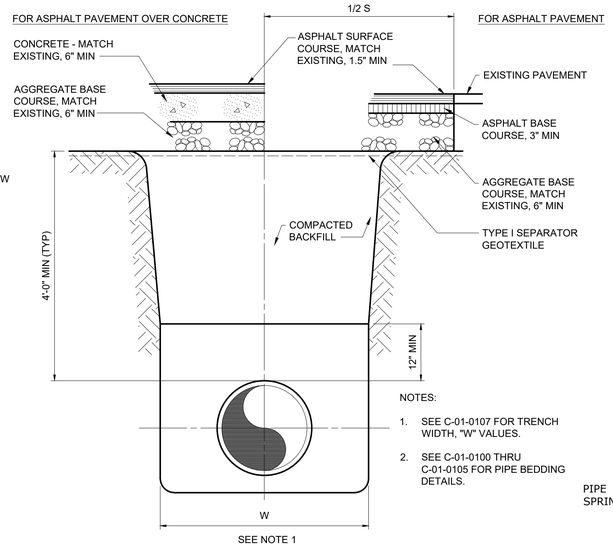

NOTES:

1. SEE C-01-0107 FOR TRENCH WIDTH, "W" VALUES.
2. SEE C-01-0100 THRU C-01-0105 FOR PIPE BEDDING DETAILS.

TYPICAL TRENCH

C-01-0106

TRENCH EXCAVATION LIMITS		
INTERNAL DIAMETER OF PIPE	W WIDTH OF TRENCH	
	MAX	W=MIN
4"-6"	3'-9"	2'-0"
8"-10"	3'-9"	2'-2"
12"	3'-9"	O.D.+2'
14"-16"	4'-2"	O.D.+2'
18"	4'-4"	O.D.+2'
20",21"	4'-8"	O.D.+2'
24"	4'-11"	O.D.+2'
27"	5'-9"	O.D.+2'
30"	6'-7"	O.D.+2'
36"	7'-4"	O.D.+2'
42"	8'-2"	O.D.+2'
48"	8'-9"	O.D.+2'
54"	9'-4"	O.D.+2'
60"	9'-10"	O.D.+2'
72"	11'-0"	O.D.+2'
78"	11'-8"	O.D.+2'
84"	12'-0"	O.D.+2'
90"	12'-6"	O.D.+2'
96"	13'-0"	O.D.+2'
108"	14'-0"	O.D.+2'
DEPTH OF CUT	S MAXIMUM PAVEMENT REPLACEMENT WIDTH	
0-6'	S=W+4'	
>6-8'	S=W+8'	
>8-10'	S=W+12'	
>10-12'	S=W+16'	
>12-14'	S=W+20'	
>14-16'	S=W+24'	
>16-18'	S=W+28'	
>18'	S=W+32'	

W = TRENCH WIDTH AT BOTTOM OF PIPE. TRENCH SIDE SLOPES SHALL BE IN ACCORDANCE WITH OSHA REQUIREMENTS.

C-01-0107

TRANSMISSION MAIN NOTES:

1. EXISTING UTILITIES TO BE RAISED/LOWERED TO FINISH GRADE. (INCLUDES CB'S, DI'S, MH'S, VALVES, HYDRANTS, ETC.)
2. PROVIDE 18" VERTICAL SEPARATION BETWEEN WATER MAIN AND SANITARY SEWER; AND 18" SEPARATION BETWEEN WATER MAIN AND STORMSEWER.
3. PROVIDE 10' HORIZONTAL SEPARATION BETWEEN WATER MAIN AND ALL OTHER UTILITIES.
4. EXISTING ON SITE WATER SYSTEM IS TO BE PRESSURE TESTED AND DISINFECTED.
5. EXISTING SANITARY SEWER MANHOLES THAT WILL BE CONNECTED TO ARE TO BE RECONSTRUCTED AS REQUIRED WITH 4' DIA. PRECAST RISERS WITH ROOF SLAB AND 3' DIA. OPENING. (SEE DETAILS FOR MANHOLE).
6. SEE THRUST BLOCK DETAILS FOR WATER MAIN SYSTEM.
7. ALL WATER MAINS TO BE TESTED AND CHLORINATED IN ACCORDANCE WITH AWWA STANDARDS C 600-93 SECTION 4 & C651-99 EXCEPT FOR SECTION 4.4.2 (TABLET METHOD). ALL TESTING MUST BE PERFORMED, RESULTS CERTIFIED BY A NYS PR AND SENT TO AND APPROVED BY WESTCHESTER COUNTY DEPARTMENT OF HEALTH BEFORE WATER MAIN IS PUT INTO SERVICE.
8. EXISTING WATER MAINS THAT ARE BEING REPLACED WITH NEW WATER MAINS SHALL BE REMOVED OR ABANDONED AFTER THE NEW MAIN HAS BEEN PLACE IN SERVICE.
9. ALL VALVES ASSOCIATED WITH TRANSMISSION MAINS SHALL ONLY BE OPERATED BY DPW STAFF.

PRESSURE LEAKAGE TESTING:

1. ALL PIPE INSTALLED SHALL BE PRESSURE TESTED AND LEAKAGE TESTED IN ACCORDANCE WITH THE LATEST EDITION OF AWWA STANDARD C600-93 SECTION 4.
2. 48 HOUR NOTICE TO DPW AND WCDOH IS REQUIRED FOR SCHEDULING PRESSURE/LEAKAGE TESTING.

DISINFECTION

1. ALL NEW, CLEANED, OR REPAIRED WATER MAINS SHALL BE DISINFECTED IN ACCORDANCE WITH TEH LATEST EDITION OF AWWA STANDARDS C 600-93 SECTION 4 & C651-99 EXCEPT FOR SECTION 4.4.2 (TABLET METHOD).

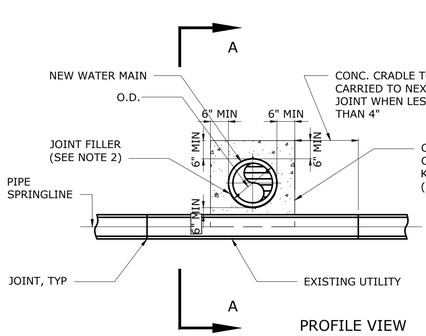

PROFILE VIEW

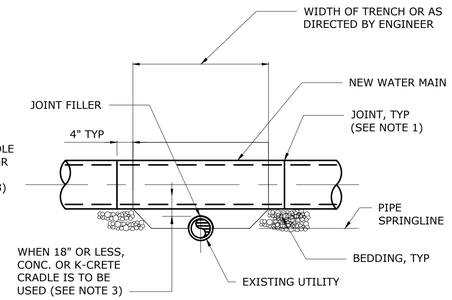

SECTION A-A

NOTES:

1. ARRANGE SO NEITHER NEW OR EXISTING PIPE HAS JOINT IN CONTACT WITH CONCRETE.
2. JUTE OR SIMILAR BITUMINOUS IMPREGNATED JOINT FILLER SHALL BE INSTALLED BETWEEN BOTH PIPES AND CONCRETE.
3. IF 10' OF HORIZONTAL SEPARATION OR 18" VERTICAL SEPARATION CANNOT BE MADE, THE CONTRACTOR WILL ENCASE THE NEW WATER MAIN IN K-CRETE (SEE WATER MAIN INSTALLATION NEAR SANITARY SEWER). HEALTH DEPARTMENT APPROVAL SHALL BE REQUIRED.

NEW PIPE OVER EXIST. UTILITY

C-01-0120R

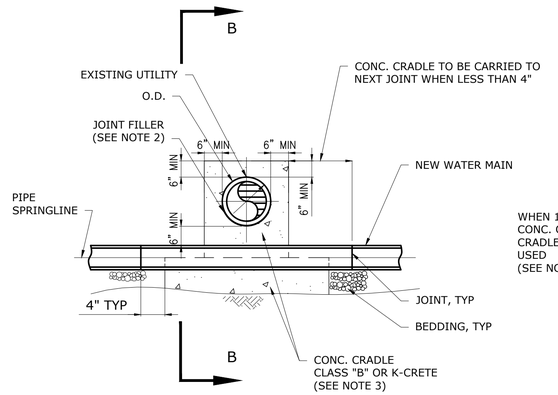

PROFILE VIEW

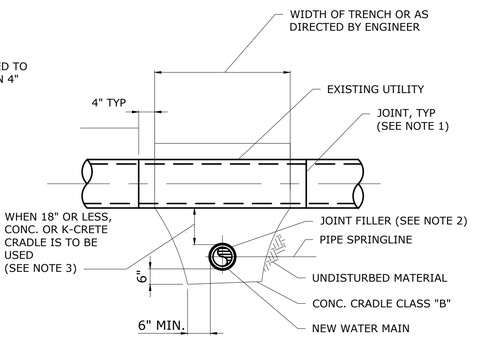

SECTION B-B

NOTES:

1. ARRANGE SO NEITHER NEW OR EXISTING PIPE HAS JOINT IN CONTACT WITH CONCRETE.
2. JUTE OR SIMILAR BITUMINOUS IMPREGNATED JOINT FILLER SHALL BE INSTALLED BETWEEN BOTH PIPES AND CONCRETE.
3. IF 10' OF HORIZONTAL SEPARATION OR 18" VERTICAL SEPARATION CANNOT BE MADE, THE CONTRACTOR WILL ENCASE THE NEW WATER MAIN IN K-CRETE (SEE WATER MAIN INSTALLATION NEAR SANITARY SEWER). HEALTH DEPARTMENT APPROVAL SHALL BE REQUIRED.

NEW PIPE UNDER EXIST. UTILITIES

C-01-0120R

WARNING
IT IS A VIOLATION OF SECTION 7209.2 OF THE NEW YORK STATE EDUCATION LAW FOR ANY PERSON, UNLESS ACTING UNDER THE DIRECTION OF A LICENSED PROFESSIONAL ENGINEER, TO ALTER IN ANY WAY PLANS, SPECIFICATIONS, PLATS OR REPORTS TO WHICH THE SEAL OF A PROFESSIONAL ENGINEER HAS BEEN APPLIED. IF AN ITEM BEARING THE SEAL OF A PROFESSIONAL ENGINEER IS ALTERED, THE ALTERING ENGINEER SHALL AFFIX TO THE ITEM HIS SEAL AND THE NOTATION "ALTERED BY" FOLLOWED BY HIS SIGNATURE, THE DATE, AND A SPECIFIC DESCRIPTION OF THE ALTERATION.

REV	ISSUED FOR	DATE	BY

PROJECT ENGINEER: R. FROST

DESIGNED BY: J. TANNER

DRAWN BY: J. TANNER

CHECKED BY: D. SHEERAN

IF THIS BAR DOES NOT MEASURE 1" THEN DRAWING IS NOT TO FULL SCALE 0 1/2" 1"

BID SET



Hazen
HAZEN AND SAWYER
498 SEVENTH AVENUE, 11th FLOOR
NEW YORK, NEW YORK 10018

WESTCHESTER JOINT WATER WORKS
MAMARONECK, NY

RYE LAKE WATER FILTRATION PLANT
HARRISON, NY

CIVIL
YARD PIPING DETAILS - SHEET 1 OF 2

DATE: FEB 2025

HAZEN NO.: 90388-000

CONTRACT NO.: A1364-A

DRAWING NUMBER: C-251

File: C:\USERS\JTANNER\DOCUMENTS\HAZEN AND SAWYER\90388-000_RYE_LAKE_FILTRATION\PROJECT FILES\PROJECTWISE\CIVIL\C-251A Saved by JTANNER Save date: 2/10/2025 10:29 AM
PLOT DATE: 3/27/2025 12:04 AM BY: JTANNER

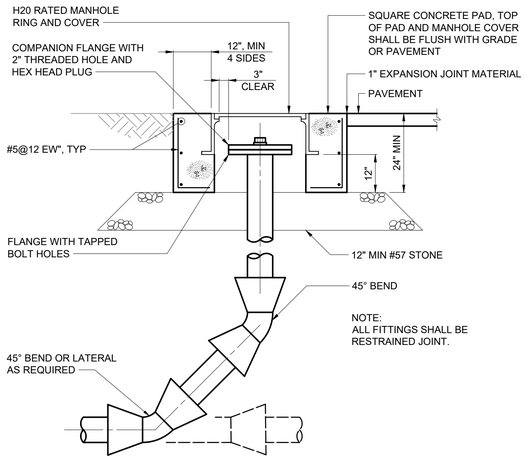

CLEANOUT RISER FOR PRESSURIZED LINES 4"-12"

C-33-0643

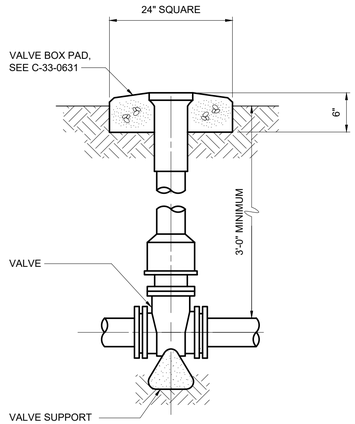

VALVE BOX

C-33-0630

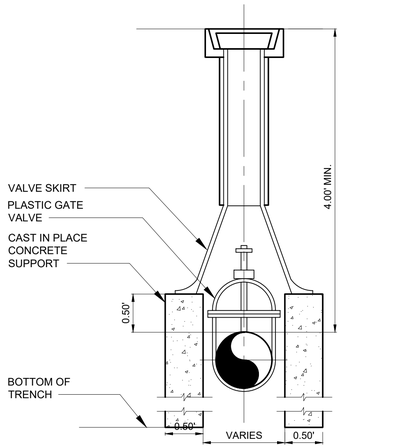

PLASTIC VALVE BOX DETAIL

NTS

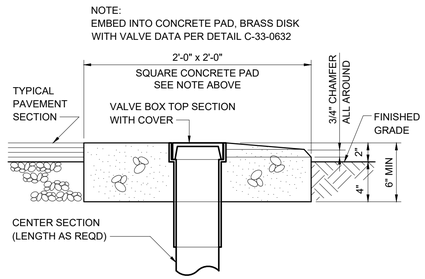

VALVE BOX PAD

C-33-0631

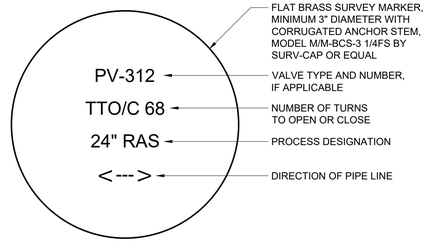

NOTES:

1. ENGRAVING SHALL BE MINIMUM 3/16" TALL CAPITAL LETTERS IN A BLOCK FONT SIMILAR TO ARIAL, CENTERED AND SPACED AS SHOWN.
2. ALL MARKINGS SHALL BE NEATLY MACHINE ENGRAVED.
3. ALTERNATELY, MARKINGS MAY BE HAND STAMPED, PROVIDED STAMPING IS DEEP ENOUGH TO WITHSTAND NORMAL TRAFFIC AND WEATHERING. STAMPING OF DISK SHALL BE ACCOMPLISHED PRIOR TO SETTING IN CONCRETE VALVE BOX PAD.
4. SUBMIT ONE SAMPLE FOR APPROVAL PRIOR TO ENGRAVING ALL MARKERS.
5. REGARDLESS OF ENGRAVING METHOD SELECTED, CONTRACTOR SHALL PROVIDE COMPATIBLE STAMP SET AND ANVIL TO OWNER UPON COMPLETION OF PROJECT FOR FUTURE REPAIR OF ENGRAVINGS.

C-33-0632

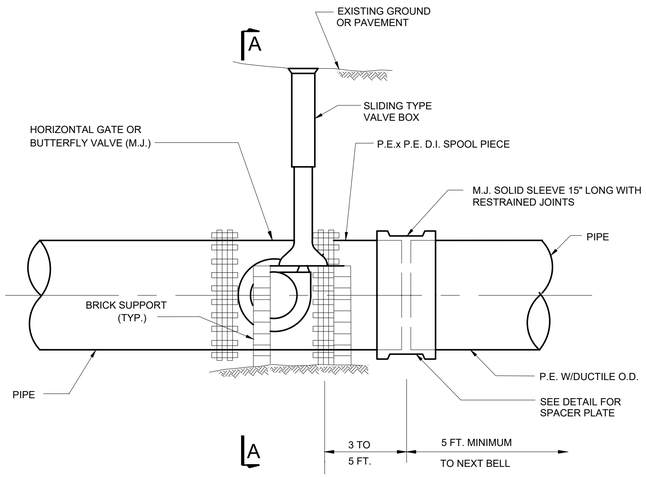

ELEVATION

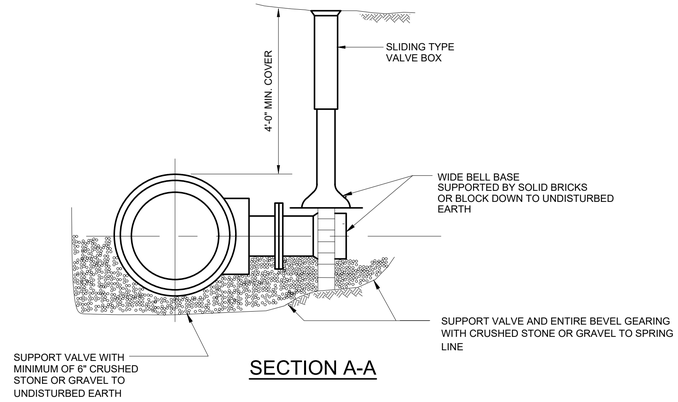

SECTION A-A

NOTES:

1. NO PART OF VALVE BOX OR BASE TO TOUCH VALVE
2. PAINT NUTS AND BOLTS ON JOINTS WITH 2 COATS BITUMASTIC AFTER INSTALLATION

TYPICAL HORIZONTAL MAIN - LINE GATE OR BUTTERFLY VALVE INSTALLATION DETAIL

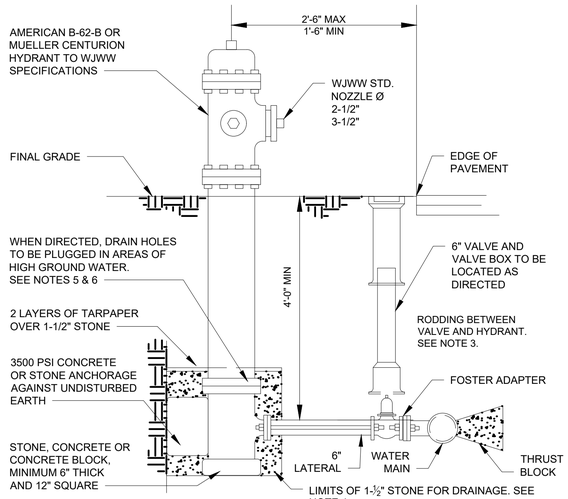

NOTES:

1. PUMPER OUTLET SHALL FACE STREET, HOSE OUTLETS SHALL BE PARALLEL TO STREET.
2. PLUMBNESS OF HYDRANT TO BE CHECKED IN TWO DIRECTIONS, 90° APART.
3. RODDING SHALL CONSIST OF TWO 3/4" THREADED RODS CAREFULLY COATED WITH BITUMASTIC PAINT. RODDING MAY BE OMITTED BETWEEN THE MAIN AND LATERAL VALVE ONLY WHERE A TAPPING VALVE OR HYDRANT VALVE ANCHORING TEE IS USED.
4. 1-1/2" STONE SHALL BE PLACED AROUND THE HYDRANT FROM THE BOTTOM OF THE TRENCH, BUT AT LEAST 6" BELOW THE BASE OF THE HYDRANT TO 6" ABOVE THE WASTE OPENING AND TO A DISTANCE OF 12" AROUND THE ELBOW.
5. HYDRANTS WITH PLUGGED DRAINS SHALL HAVE A 3" BLACK CIRCLE PAINTED DIRECTLY UNDER THE PUMPER OUTLET.
6. HYDRANT DRAINAGE:
   - 6.A. HYDRANT DRAINS SHOULD BE PLUGGED. WHEN THE DRAINS ARE PLUGGED THE BARRELS MUST BE PUMPED DRY AFTER USE DURING FREEZING WEATHER.
   - 6.B. WHERE HYDRANT DRAINS ARE NOT PLUGGED, A GRAVEL POCKET OR DRY WELL SHALL BE PROVIDED UNLESS THE NATURAL SOILS WILL PROVIDE ADEQUATE DRAINAGE.
   - 6.C. HYDRANT DRAINS SHALL NOT BE CONNECTED TO OR LOCATED WITHIN 10 FEET OF SANITARY SEWERS, STORM SEWERS, OR STORM DRAINS.
   - 6.D. HYDRANT DRAINS, WHERE ALLOWED, MUST BE ABOVE THE SEASONAL GROUNDWATER TABLE.

FIRE HYDRANT

NTS

WARNING
IT IS A VIOLATION OF SECTION 7209.2 OF THE NEW YORK STATE EDUCATION LAW FOR ANY PERSON, UNLESS ACTING UNDER THE DIRECTION OF A LICENSED PROFESSIONAL ENGINEER, TO ALTER IN ANY WAY PLANS, SPECIFICATIONS, PLATS OR REPORTS TO WHICH THE SEAL OF A PROFESSIONAL ENGINEER HAS BEEN APPLIED. IF AN ITEM BEARING THE SEAL OF A PROFESSIONAL ENGINEER IS ALTERED, THE ALTERING ENGINEER SHALL AFFIX TO THE ITEM HIS SEAL AND THE NOTATION "ALTERED BY" FOLLOWED BY HIS SIGNATURE, THE DATE, AND A SPECIFIC DESCRIPTION OF THE ALTERATION.

REV	ISSUED FOR	DATE	BY

PROJECT ENGINEER:	R. FROST
DESIGNED BY:	J. TANNER
DRAWN BY:	J. TANNER
CHECKED BY:	D. SHEERAN

IF THIS BAR DOES NOT MEASURE 1" THEN DRAWING IS NOT TO FULL SCALE (0, 1/2", 1")

BID SET



Hazen

HAZEN AND SAWYER
498 SEVENTH AVENUE, 11th FLOOR
NEW YORK, NEW YORK 10018

WESTCHESTER JOINT WATER WORKS
MAMARONECK, NY

RYE LAKE WATER FILTRATION PLANT
HARRISON, NY

CIVIL
YARD PIPING DETAILS - SHEET 2 OF 2

DATE:	FEB 2025
HAZEN NO.:	90388-000
CONTRACT NO.:	A1364-A
DRAWING NUMBER:	C-252

File: C:\USERS\JTANNER\DOCUMENTS\ACCDOCS\HAZEN AND SAWYER\90388-000_RYE_LAKE_FILTRATION\PROJECT FILES\PROJECTWISE\CIVIL\C-252 Saved by JTANNER Save date: 2/12/2025 2:17 PM
PLOT DATE: 3/27/2025 12:04 AM BY: JTANNER

EROSION AND SEDIMENT CONTROL NOTES:

1. CONTRACTOR SHALL BE RESPONSIBLE FOR COMPLIANCE WITH ALL SOIL EROSION AND SEDIMENT CONTROL PRACTICES.

2. ALL WORK SHALL BE PERFORMED IN ACCORDANCE WITH THE APPROVED STORMWATER POLLUTION PREVENTION PLAN (SWPPP) IF APPLICABLE, AND/OR WITH THE SOIL EROSION AND SEDIMENT CONTROL REQUIREMENTS SPECIFIED BY THE NYSDEC STANDARDS AND SPECIFICATIONS FOR EROSION AND SEDIMENT CONTROL (NOVEMBER 2016), AND THE TOWN/VILLAGE OF HARRISON STANDARDS FOR EROSION AND SEDIMENT CONTROL.

3. IN THE EVENT OF CONFLICT BETWEEN THESE SPECIFICATION REQUIREMENTS AND POLLUTION CONTROL LAWS, RULES, REGULATIONS OR PERMIT CONDITIONS BY OTHER FEDERAL OR STATE OR LOCAL GOVERNMENT AGENCIES, THE MORE RESTRICTIVE LAWS, RULES OR REGULATIONS SHALL APPLY.

4. DUE TO THE NATURE OF THE WORK REQUIRED BY THIS CONTRACT, IT IS ANTICIPATED THE LOCATION AND NATURE OF EROSION AND SEDIMENT CONTROL MEASURES WILL BE ADJUSTED AS CONSTRUCTION PROGRESSES TO REFLECT THE CURRENT PHASE OF WORK. THE CONSTRUCTION SCHEDULE ADOPTED BY THE CONTRACTOR WILL IMPACT THE PLACEMENT AND NEED FOR SPECIFIC DEVICES REQUIRED FOR THE CONTROL OF EROSION. THE LOCATION AND EXTENT OF EROSION AND SEDIMENT CONTROL MEASURES SHALL BE REVISED AT EACH PHASE OF CONSTRUCTION RESULTING IN A CHANGE OF EITHER THE QUANTITY OR DIRECTION OF SURFACE RUNOFF FROM THE CONSTRUCTION AREAS. PERMANENT EROSION AND SEDIMENT CONTROL MEASURES SHALL REMAIN IN PLACE AT THE CONCLUSION OF THE PROJECT.

5. CONTRACTOR SHALL OBTAIN PRIOR APPROVAL FROM THE ENGINEER, OWNER, AND REGULATORY AGENCIES FOR DEVIATIONS FROM THE APPROVED EROSION AND SEDIMENT CONTROL PLAN.

6. NO LAND DISTURBANCE, DEMOLITION OR CONSTRUCTION ACTIVITIES SHALL BEGIN UNTIL ALL PERIMETER EROSION AND SEDIMENT CONTROL MEASURES, INCLUDING, BUT NOT LIMITED TO, SILT FENCING, INLET PROTECTION, TEMPORARY DIVERSIONS, SEDIMENT BASIN PROTECTION HAVE BEEN INSTALLED AS SHOWN ON THE CONTRACT DRAWINGS. IF CLEARING IS REQUIRED FOR INSTALLATION OF A PARTICULAR MEASURE, ALL MEASURES NOT REQUIRING CLEARING SHALL BE INSTALLED FIRST. CLEARING OF THE NECESSARY LAND FOR INSTALLATION OF THE PARTICULAR MEASURE MAY THEN PROCEED.

7. CLEARING SHALL BE LIMITED AS MUCH AS POSSIBLE TO AREAS REQUIRED FOR CURRENT CONSTRUCTION ACTIVITIES. MASS CLEARING AND GRADING SHALL BE AVOIDED.

8. ALL EROSION CONTROL MEASURES SHALL BE INSPECTED BY A QUALIFIED INSPECTOR WITHIN 24 HOURS FOLLOWING EVERY RAINFALL BUT IN NO CASE LESS THAN TWICE EVERY SEVEN CALENDAR DAYS. THE TWO INSPECTIONS SHALL BE SEPARATED BY A MINIMUM OF TWO (2) FULL CALENDAR DAYS.

9. EROSION AND SEDIMENT CONTROL MEASURES SHALL BE INSPECTED AND MAINTAINED, REPAIRED, OR REPLACED IMMEDIATELY BY THE CONTRACTOR AS REQUIRED TO MAINTAIN PERFORMANCE OF MEASURE DURING THE LIFE OF THE PROJECT, INCLUDING WINTER SHUTDOWN, ETC. SUCH INSPECTION AND MAINTENANCE SHALL CONTINUE UNTIL AFTER PERMANENT STABILIZATION MEASURES ARE IN PLACE AND THE TEMPORARY CONTROL MEASURES ARE ORDERED TO BE REMOVED BY THE ENGINEER.

10. TIMELY MAINTENANCE OF SEDIMENT CONTROL PRACTICES IS THE RESPONSIBILITY OF THE CONTRACTOR. ALL PRACTICES SHALL BE MAINTAINED IN GOOD WORKING ORDER AT ALL TIMES. THE SEDIMENT LEVEL IN ALL PRACTICES SHALL BE CLOSELY MONITORED AND SEDIMENT REMOVED PROMPTLY WHEN MAXIMUM LEVELS ARE REACHED OR AS ORDERED BY THE ENGINEER. ALL SEDIMENT CONTROL PRACTICES SHALL BE INSPECTED BY THE END OF EACH WORK DAY, PRIOR TO EVERY WEEKEND, BEFORE AND AFTER EACH RAINFALL OF 0.5" OR GREATER WITHIN A 12 HOUR PERIOD, OR AS DIRECTED BY THE ENGINEER IN ORDER TO INSURE PROPER OPERATION.

11. WHERE EROSION CONTROL MATERIALS HAVE BEEN USED ON FINAL GRADE THAT HAVE BEEN PERMANENTLY SEEDED, THE CONTRACTOR SHALL CARE FOR THE AREAS UNTIL ACCEPTANCE OF THE CONTRACT OR ACCEPTANCE OF THE TURF, WHICHEVER IS LATER. WHERE NECESSARY, SUCH CARE MAY INCLUDE, BUT IS NOT LIMITED TO PROVIDING WARNING SIGNS OR BARRICADES FOR PROTECTION AGAINST TRAFFIC, ANY SURFACES THAT HAVE SETTLED, BECOME GULLIED, OR OTHERWISE DAMAGED SHALL BE REPAIRED AT NO ADDITIONAL EXPENSE TO THE CITY TO REESTABLISH THE GRADE AND SOIL CONDITIONS THAT EXISTED PRIOR TO PLACING EROSION CONTROL MATERIALS.

12. DUST CONTROL MUST BE PROVIDED AS DIRECTED.

13. CONTRACTOR SHALL INITIATE STABILIZATION MEASURES AS SOON AS PRACTICABLE ON STOCKPILES AND IN PORTIONS OF THE SITE WHERE CONSTRUCTION ACTIVITIES HAVE TEMPORARILY OR PERMANENTLY CEASED, BUT IN NO CASE MORE THAN 7 DAYS AFTER THE CONSTRUCTION ACTIVITY IN THAT PORTION OF THE SITE HAS TEMPORARILY OR PERMANENTLY CEASED. THIS REQUIREMENT DOES NOT APPLY IN THE FOLLOWING INSTANCES:

    A) WHERE THE INITIATION OF STABILIZATION MEASURES BY THE 7TH DAY AFTER CONSTRUCTION ACTIVITY TEMPORARILY OR PERMANENTLY CEASED IS PRECLUDED BY SNOW COVER OR FROZEN GROUND CONDITIONS, STABILIZATION MEASURES SHALL BE INITIATED AS SOON AS PRACTICABLE;

    B) WHERE CONSTRUCTION ACTIVITY ON A PORTION OF THE SITE IS TEMPORARILY CEASED, AND EARTH-DISTURBING ACTIVITIES WILL BE RESUMED WITHIN FOURTEEN (14) DAYS, TEMPORARY STABILIZATION MEASURES NEED NOT BE INITIATED ON THAT PORTION OF THE SITE.

14. ALL DISTURBED AREAS SHALL DRAIN TO APPROVED SEDIMENT CONTROL MEASURES AT ALL TIMES DURING LAND DISTURBANCE ACTIVITIES AND UNTIL FINAL STABILIZATION IS ACHIEVED. SEDIMENT-LADEN GROUNDWATER ENCOUNTERED DURING TRENCHING, BORING, OR OTHER ACTIVITIES SHALL BE PUMPED INTO A SEDIMENT TRAPPING DEVICE PRIOR TO BEING DISCHARGED INTO A STREAM, POND, SWALE, OR CATCH BASIN.

15. SOIL STOCKPILE AND LAYDOWN AREAS SHALL HAVE PERIMETER SEDIMENT CONTROL MEASURES AND TEMPORARY OR PERMANENT STABILIZATION MEASURES INSTALLED AS SOON AS POSSIBLE AND AT COMPLETION OF STOCKPILING AND LAYDOWN ACTIVITIES. STOCKPILE SIDE SLOPES SHALL NOT EXCEED 3H : 1V UNLESS APPROVED BY ENGINEER. TOP OF STOCKPILE SHALL BE GRADED WITH A MINIMUM 5% SLOPE TO INSURE PROPER DRAINAGE.

16. EARTHEN-MATERIAL STOCKPILES MUST BE LOCATED A MINIMUM OF 50' FROM STORM DRAINS AND STREAMS UNLESS NO REASONABLE ALTERNATIVES ARE AVAILABLE.

17. DEDICATED AREAS FOR DEMOLITION, CONSTRUCTION, AND OTHER WASTES MUST BE LOCATED A MINIMUM OF 50' FROM STORM DRAINS AND STREAMS UNLESS NO REASONABLE ALTERNATIVES ARE AVAILABLE.

18. STAGING AREA, STOCKPILES, AND OTHER STORAGE LOCATIONS SHALL BE PROTECTED FROM EROSION.

19. ALL DISTURBED SOIL AREAS SHALL BE FERTILIZED, SEEDED AND MULCHED IN ACCORDANCE WITH THE SPECIFICATIONS AND THE SEEDING SCHEDULE, AND RE-SEEDED AS NECESSARY, TO ESTABLISH AND MAINTAIN A VIGOROUS, DENSE VEGETATIVE COVER.

20. ALL POINTS OF CONSTRUCTION INGRESS AND EGRESS SHALL BE PROTECTED TO PREVENT THE DEPOSITION OF MATERIALS ONTO TRAVERSED OFFSITE ROADWAYS. IF MATERIAL IS TRACKED ONTO OFFSITE ROADWAYS, IT SHALL BE REMOVED IMMEDIATELY. DO NOT UTILIZE A WATER HOSE TO CLEAN ROADS UNLESS THE RUNOFF IS DIRECTED TO A PROPERLY DESIGNED AND FUNCTIONING SEDIMENT CONTROL DEVICE. PROPER PRECAUTIONS SHALL BE TAKEN TO ENSURE THAT MATERIALS DEPOSITED ONTO OFFSITE ROADWAYS ARE REMOVED SO THAT THEY DO NOT ENTER YARD INLETS, CATCH BASINS, SEWERS, WETLANDS, SURFACE WATER BODIES, OR ROADSIDE SWALES. DO NOT UTILIZE A FIRE OR GARDEN HOSE TO CLEAN ROADS UNLESS THE RUNOFF IS DIRECTED TO A PROPERLY DESIGNED AND FUNCTIONING SEDIMENT CONTROL DEVICE. WATER PUMPED OUT OF THE EXCAVATED AREAS CONTAINS SEDIMENTS THAT MUST BE REMOVED PRIOR TO DISCHARGING TO RECEIVING BODIES OF WATER USING REMOVABLE PUMPING STATIONS, SUMP PITS, PORTABLE SEDIMENTATION TANKS AND/OR SILT CONTROL BAGS.

21. WHERE CONCRETE EQUIPMENT WASHING IS REQUIRED, THIS MUST BE DONE IN AN APPROVED "CONCRETE CONTAINMENT AREA". CONTRACTOR SHALL NOT DISCHARGE ANY CONCRETE WASHOUT WATER INTO SEWERS, SURFACE WATER BODIES OR ONTO THE GROUND. ALL WASHOUT WATER MUST BE REMOVED FROM THE SITE(S) DAILY.

22. SEEDING DATES: THE FOLLOWING SEEDING DATES ARE BEST RECOMMENDED TO ESTABLISH PERMANENT VEGETATIVE COVER WITHIN MOST LOCATIONS IN THE WESTCHESTER COUNTY SOIL AND WATER CONSERVATION DISTRICT: SPRING - 3/1-6/1 AND FALL - 9/1 - 10/15

23. THE CONTRACTOR SHALL BE RESPONSIBLE FOR THE DESIGN, INSTALLATION, PERMITTING, AND OPERATION OF A DEWATERING SYSTEM AS REQUIRED FOR THE COMPLETION OF THE WORK. PROCEDURES FOR DEWATERING INCLUDING ASSOCIATED EROSION AND SEDIMENT CONTROL PROPOSED BY THE CONTRACTOR SHALL BE SUBMITTED TO THE ENGINEER FOR REVIEW PRIOR TO ANY EARTHWORK OPERATIONS. ALL WATER REMOVED BY DEWATERING OPERATIONS SHALL BE DISPOSED OF IN ACCORDANCE WITH THE SOIL EROSION AND SEDIMENT CONTROL REQUIREMENTS SPECIFIED BY THE NYSDEC STANDARDS AND SPECIFICATIONS FOR EROSION AND SEDIMENT CONTROL (NOVEMBER 2016). CONTRACTOR MAY USE PORTABLE SETTLING TANK, SEDIMENT FILTER BAG, OR OTHER APPROVED METHOD TO SETTLE DEWATERING FLOW OF SEDIMENT BEFORE DISCHARGE.

24. ALL EROSION AND SEDIMENT CONTROL MEASURES SHALL REMAIN IN PLACE UNTIL CONSTRUCTION IS COMPLETE, PERMANENT VEGETATION IS ESTABLISHED ON ALL DISTURBED AREAS, AND LOCAL AUTHORITIES HAVE GIVEN PERMISSION FOR REMOVAL. ONCE FINAL STABILIZATION IS COMPLETE, REMOVE EROSION AND SEDIMENT CONTROL MEASURES AND PERFORM FINAL SITE RESTORATION.

25. IF INSPECTIONS BY THE ENGINEER OR THE TOWN/VILLAGE OF HARRISON'S DPW INSPECTOR OR ENGINEER FIND FAILURE(S) BY THE CONTRACTOR TO COMPLY, THE ENTIRE PROJECT WILL BE STOPPED WITH NO COMPENSATION TO THE CONTRACTOR UNTIL ALL FINDINGS HAVE BEEN IDENTIFIED, ADDRESSED AND COMPLETED BY THE CONTRACTOR.

26. IF DIRECTED, THE CONTRACTOR SHALL PROVIDE TO THE ENGINEER WEEKLY COPIES OF A REPORT FOR HIS INSPECTION, FINDINGS AND ACTIONS TAKEN.

27. THE CONTRACTOR SHALL MAINTAIN ALL TEMPORARY AND PERMANENT STORMWATER MANAGEMENT PRACTICES DURING CONSTRUCTION UNTIL FINAL STABILIZATION AND ACCEPTANCE BY THE OWNER. WJWW SHALL MAINTAIN PERMANENT STORMWATER MANAGEMENT PRACTICES UPON COMPLETION OF CONSTRUCTION. SEE SWPPP FOR APPLICABLE CONTACT INFORMATION.

SITE RESTORATION REQUIREMENTS			
TYPE OF SOIL DISTURBANCE	SOIL RESTORATION REQUIREMENT		COMMENTS / EXAMPLES
NO SOIL DISTURBANCE	RESTORATION NOT PERMITTED		PRESERVATION OF NATURAL FEATURES
MINIMAL SOIL DISTURBANCE	RESTORATION NOT PERMITTED		CLEARING AND GRUBBING
AREAS WHERE TOPSOIL IS STRIPPED ONLY - NO CHANGE IN GRADE	HSG A & B	HSG C & D	PROTECT AREA FROM ANY ONGOING CONSTRUCTION ACTIVITIES
	APPLY 6 INCHES OF TOPSOIL	AERATE* AND APPLY 6 INCHES OF TOPSOIL	
AREAS OF CUT OR FILL	HSG A & B	HSG C & D	
	AERATE* AND APPLY 6 INCHES OF TOPSOIL	APPLY FULL SOIL RESTORATION**	
HEAVY TRAFFIC AREAS ON SITE (ESPECIALLY IN ZONE 5-25 FEET AROUND BUILDINGS BUT NOT WITHIN 5 FOOT PERIMETER AROUND FOUNDATION WALLS	APPLY FULL SOIL RESTORATION (DECOMPACTION AND COMPOST ENHANCEMENT)		
AREAS WHERE RUNOFF REDUCTION AND/OR INFILTRATION PRACTICES ARE APPLIED	RESTORATION NOT REQUIRED. BY MAY BE APPLIED TO ENHANCE THE REDUCTION SPECIFIED FOR APPROPRIATE PRACTICES		KEEP CONSTRUCTION EQUIPMENT FROM CROSSING THESE AREAS. TO PROTECT NEWLY INSTALLED PRACTICE FROM ANY ONGOING CONSTRUCTION ACTIVITIES CONSTRUCT A SINGLE PHASE OPERATION FENCE AREA
REDEVELOPMENT PROJECTS	SOIL RESTORATION IS REQUIRED ON REDEVELOPMENT PROJECTS IN AREAS WHERE EXISTING IMPERVIOUS AREA WILL BE CONVERTED TO PERVIOUS AREA		

* AERATION INCLUDES THE USE OF MACHINES SUCH AS TRACTOR-DRAWN IMPLEMENTS WITH COULTERS MAKING A NARROW SLIT IN THE SOIL, A ROLLER WITH MANY SPIKES MAKING INDENTATIONS IN THE SOIL, OR PRONGS WHICH FUNCTION LIKE A MINI-SUBSOILER.

** PER "DEEP RIPPING AND DE-COMPACTION, DEC 2008".

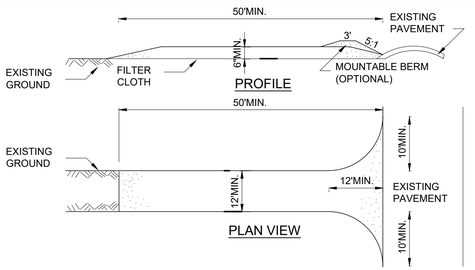

CONSTRUCTION SPECIFICATIONS

1. STONE SIZE - USE 1-4 INCH STONE, OR RECLAIMED OR RECYCLED CONCRETE EQUIVALENT.
2. LENGTH - NOT LESS THAN 50 FEET (EXCEPT ON A SINGLE RESIDENCE LOT WHERE A 30 FOOT MINIMUM LENGTH WOULD APPLY).
3. THICKNESS - NOT LESS THAN SIX (6) INCHES.
4. WIDTH - TWELVE (12) FOOT MINIMUM, BUT NOT LESS THAN THE FULL WIDTH AT POINTS WHERE INGRESS OR EGRESS OCCURS. TWENTY-FOUR (24) FOOT IF SINGLE ENTRANCE TO SITE.
5. GEOTEXTILE - WILL BE PLACED OVER THE ENTIRE AREA PRIOR TO PLACING OF STONE.
6. SURFACE WATER - ALL SURFACE WATER FLOWING OR DIVERTED TOWARD CONSTRUCTION ACCESS SHALL BE PIPED BENEATH THE ENTRANCE. IF PIPING IS IMPRACTICAL, A MOUNTABLE BERM WITH 5:1 SLOPES WILL BE PERMITTED.
7. MAINTENANCE - THE ENTRANCE SHALL BE MAINTAINED IN A CONDITION WHICH WILL PREVENT TRACKING OR FLOWING OF SEDIMENT ONTO PUBLIC RIGHTS-OF-WAY, ALL SEDIMENT SPILLED, DROPPED, WASHED OR TRACKED ONTO PUBLIC RIGHTS-OF-WAY MUST BE REMOVED IMMEDIATELY.
8. WHEN WASHING IS REQUIRED, IT SHALL BE DONE ON A AREA STABILIZED WITH STONE AND WHICH DRAINS INTO AN APPROVED SEDIMENT TRAPPING DEVICE.
9. PERIODIC INSPECTION AND NEEDED MAINTENANCE SHALL BE PROVIDED AFTER EACH RAIN.

STABILIZED CONSTRUCTION ACCESS

NTS

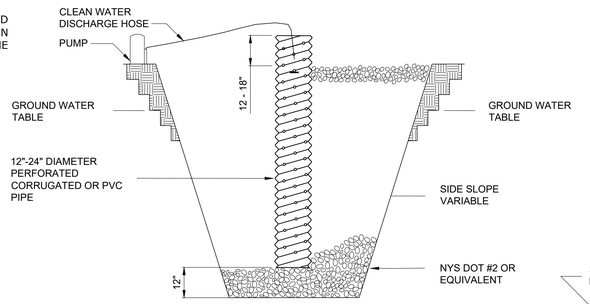

CONSTRUCTION SPECIFICATIONS

1. PIT DIMENSIONS ARE VARIABLE.
2. THE STANDPIPE SHOULD BE CONSTRUCTED BY PERFORATING A 12-24" DIAMETER CORRUGATED OR PVC PIPE.
3. A BASE OF NYS DOT #2 OR EQUIVALENT AGGREGATE SHOULD BE PLACED IN THE PIT TO A DEPTH OF 12". AFTER INSTALLING THE STANDPIPE, THE PIT SURROUNDING THE STANDPIPE SHOULD BE BACKFILLED WITH NYS DOT #2 OR EQUIVALENT AGGREGATE.
4. THE STANDPIPE SHOULD EXTEND 12-18" ABOVE THE LIP OF THE PIT.
5. IF DISCHARGE WILL BE PUMPED DIRECTLY TO A STORM DRAINAGE SYSTEM, THE STANDPIPE SHOULD BE WRAPPED WITH FILTERCLOTH BEFORE INSTALLATION. IT IS RECOMMENDED THAT 1/4"-1/2" HARDWARE CLOTH MAY BE PLACED AROUND THE STANDPIPE, PRIOR TO ATTACHING THE FILTERCLOTH.

DEWATERING SUMP PIT

NTS

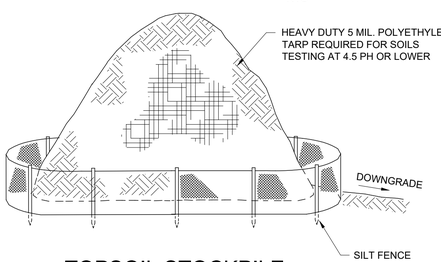

TOPSOIL STOCKPILE

NTS

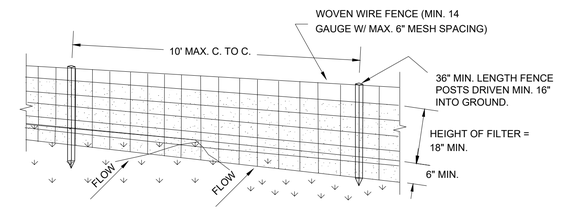

PERSPECTIVE VIEW

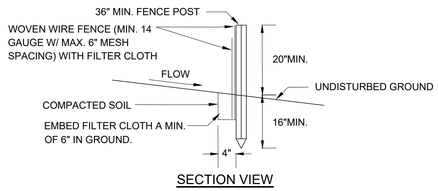

SECTION VIEW

CONSTRUCTION SPECIFICATIONS

1. WOVEN WIRE FENCE TO BE FASTENED SECURELY TO FENCE POSTS WITH WIRE TIES OR STAPLES. POSTS SHALL BE STEEL EITHER "T" OR "U" TYPE OR HARDWOOD.
2. FILTER CLOTH TO BE TO BE FASTENED SECURELY TO WOVEN WIRE FENCE WITH TIES SPACED EVERY 24" AT TOP AND MID SECTION. FENCE SHALL BE WOVEN WIRE, 6" MAXIMUM MESH OPENING.
3. WHEN TWO SECTIONS OF FILTER CLOTH ADJOIN EACH OTHER THEY SHALL BE OVER-LAPPED BY SIX INCHES AND FOLDED. FILTER CLOTH SHALL BE EITHER FILTER X, MIRAFI 100X, STABILINKA T140N, OR APPROVED EQUIVALENT.
4. PREFABRICATED UNITS SHALL MEET THE MINIMUM REQUIREMENTS SHOWN.
5. MAINTENANCE SHALL BE PERFORMED AS NEEDED AND MATERIAL REMOVED WHEN "BULGES" DEVELOP IN THE SILT FENCE.

REINFORCED SILT FENCE

NTS

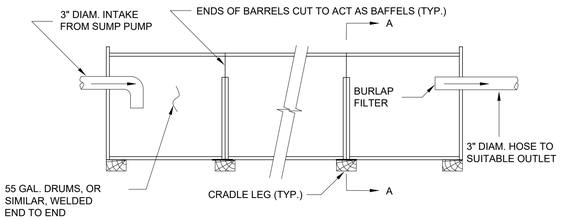

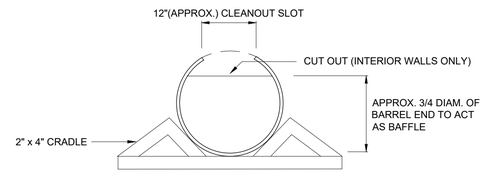

SECTION A-A

CONSTRUCTION SPECIFICATIONS

1. CLEAN OUT THE SEDIMENT TANK WHEN ONE THIRD (1/3) FILLED WITH SILT.
2. STEEL DRUMS ARE USED AS AN EXAMPLE DUE TO THEIR READY AVAILABILITY. ANY TANKS MAY BE USED, PROVIDING THAT THE VOLUME REQUIREMENTS ARE MET.
3. ALL SEDIMENT COLLECTED IN THE TANK SHALL BE DISPOSED OF IN A SEDIMENT TRAPPING DEVICE OR AS APPROVED BY THE INSPECTOR.

PORTABLE SEDIMENT TANK

NTS

WARNING
IT IS A VIOLATION OF SECTION 7209.2 OF THE NEW YORK STATE EDUCATION LAW FOR ANY PERSON, UNLESS ACTING UNDER THE DIRECTION OF A LICENSED PROFESSIONAL ENGINEER, TO ALTER IN ANY WAY PLANS, SPECIFICATIONS, PLATS OR REPORTS TO WHICH THE SEAL OF A PROFESSIONAL ENGINEER HAS BEEN APPLIED. IF AN ITEM BEARING THE SEAL OF A PROFESSIONAL ENGINEER IS ALTERED, THE ALTERING ENGINEER SHALL AFFIX TO THE ITEM HIS SEAL AND THE NOTATION "ALTERED BY" FOLLOWED BY HIS SIGNATURE, THE DATE, AND A SPECIFIC DESCRIPTION OF THE ALTERATION.

REV	ISSUED FOR	DATE	BY

PROJECT ENGINEER:	R. FROST
DESIGNED BY:	J. TANNER
DRAWN BY:	J. TANNER
CHECKED BY:	D. SHEERAN

IF THIS BAR DOES NOT MEASURE 1" THEN DRAWING IS NOT TO FULL SCALE — 0 1/2" 1"

BID SET

STATE OF NEW YORK — DANIEL JAMES SHEERAN — 088955 — LICENSED PROFESSIONAL ENGINEER

Hazen

HAZEN AND SAWYER
498 SEVENTH AVENUE, 11th FLOOR
NEW YORK, NEW YORK 10018

WESTCHESTER JOINT WATER WORKS
MAMARONECK, NY

RYE LAKE WATER FILTRATION PLANT
HARRISON, NY

CIVIL
EROSION AND SEDIMENT CONTROL NOTES

DATE:	FEB 2025
HAZEN NO.:	90388-000
CONTRACT NO.:	A1364-A
DRAWING NUMBER:	C-301

File: C:\USERS\JTANNER\DC\ACCDOCS\HAZEN AND SAWYER\90388-000_RYE_LAKE_FILTRATION\PROJECT FILES\PROJECTWISE\CIVIL\C-301 Saved by JTANNER Save date: 2/10/2025 10:28 AM
PLOT DATE: 3/27/2025 12:05 AM BY: JTANNER

EROSION AND SEDIMENT CONTROL MAINTENANCE SCHEDULE					
MONITORING REQUIREMENTS				MAINTENANCE REQUIREMENTS	
PRACTICE	DAILY	WEEKLY	AFTER RAINFALL	DURING CONSTRUCTION	AFTER CONSTRUCTION
SILT FENCE BARRIER	---	INSPECT	INSPECT	CLEAN / REPLACE	REMOVE
STABILIZED CONSTRUCTION ACCESS	INSPECT	---	INSPECT	CLEAN / REPLACE STONE AND FABRIC	REMOVE
DUST CONTROL	INSPECT	---	INSPECT	MULCHING / SPRAYING WATER	N/A
VEGETATIVE ESTABLISHMENT	---	INSPECT	INSPECT	WATER / RESEED / REPLACE	RESEED TO 80% COVERAGE
INLET PROTECTION	---	INSPECT	INSPECT	CLEAN / REPAIR / REPLACE	REMOVE
SOIL STOCKPILES	---	INSPECT	INSPECT	MULCHING / SILT FENCE REPAIR	REMOVE
CONCRETE DRAINAGE STRUCTURES	---	INSPECT	INSPECT	CLEAN SUMPS / REMOVE DEBRIS / REPAIR / REPLACE	CLEAN SUMPS / REMOVE DEBRIS / REPAIR / REPLACE
DRAINAGE PIPES	---	INSPECT	INSPECT	CLEAN / REPAIR	CLEAN / REPAIR
ROAD AND PAVEMENT	---	INSPECT	INSPECT	CLEAN	CLEAN
DEWATERING SUMP PIT	INSPECT	---	INSPECT	CLEAN / REPAIR / REPLACE	REMOVE
PORTABLE SEDIMENT TANK	INSPECT	---	INSPECT	CLEAN / REPAIR / REPLACE	REMOVE
GEOTEXTILE FILTER BAG	INSPECT	---	INSPECT	REPLACE AT 75% REDUCTION OF FLOW	REMOVE
EROSION CONTROL MATTING	---	INSPECT	INSPECT	RESTORE IF DAMAGED	BIODEGRADABLE
CONSTRUCTION ROAD STABILIZATION	---	INSPECT	INSPECT	TOP DRESS WITH GRAVEL	REMOVE
CONCRETE WASHOUT	INSPECT	---	INSPECT	REPAIR / REPLACE	REMOVE
TREE PROTECTION	---	INSPECT	INSPECT	REPAIR / REPLACE	REMOVE
CONSTRUCTION DITCH	---	INSPECT	INSPECT	REMOVE SEDIMENT / REGRADE	REMOVE
SKIMMER	---	INSPECT	INSPECT	REPAIR / REPLACE	REMOVE
SEDIMENT BASIN	INSPECT	---	INSPECT	REMOVE SEDIMENT / REGRADE	CONVERTED TO SMP
SEDIMENT BASIN BAFFLE	INSPECT	---	INSPECT	REPAIR / REPLACE	REMOVE
RIP RAP OUTLET PROTECTION	---	INSPECT	INSPECT	REPAIR / REPLACE	CLEAN / REPAIR / REMOVE DEBRIS

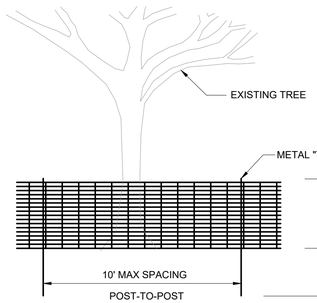

NOTES:
1. PLACE CONTINUOUS RUN OF FENCE MATERIAL ON BOTH SIDES OF IMMEDIATE WORK ZONE IN WOODED AREAS AS SHOWN ON THE PLANS. DO NOT ATTACH FENCE MATERIAL TO TREES.
2. TREE PROTECTION FENCING FABRIC TO BE PLACED AT THE DRIP LINE OF THE TREES THAT ARE TO BE PROTECTED.
3. "MIRASAFE" HIGH STRENGTH POLYMER GEOGRID FABRIC BY MIRAFI CONSTRUCTION PRODUCTS, PENDERGRASS, GEORGIA. FENCE MATERIAL TO BE WARNING AND BARRIER FENCE AS PER SPECIFICATION 31 10 00.
4. ONE SIGN PER 300' OF TREE PROTECTION FENCING SHALL READ, AS SHOWN TO THE RIGHT.

TREE PROTECTION BARRIER FENCE

NTS

FENCING FABRIC ORANGE MIRASAFE

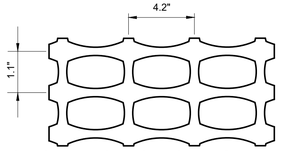

TC MIRAFI MIRASAFE OR AN APPROVED EQUAL. STAPLE TO VERTICAL 2X4 OR TIE TO METAL "T" POSTS.

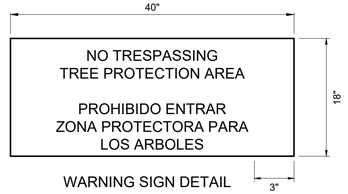

WARNING SIGN DETAIL

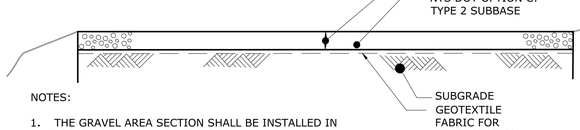

NOTES:
1. THE GRAVEL AREA SECTION SHALL BE INSTALLED IN LOCATIONS SHOWN ON THE DRAWINGS ONLY.

CONSTRUCTION ROAD STABILIZATION

NTS

WARNING
IT IS A VIOLATION OF SECTION 7209.2 OF THE NEW YORK STATE EDUCATION LAW FOR ANY PERSON, UNLESS ACTING UNDER THE DIRECTION OF A LICENSED PROFESSIONAL ENGINEER, TO ALTER IN ANY WAY PLANS, SPECIFICATIONS, PLATS OR REPORTS TO WHICH THE SEAL OF A PROFESSIONAL ENGINEER HAS BEEN APPLIED. IF AN ITEM BEARING THE SEAL OF A PROFESSIONAL ENGINEER IS ALTERED, THE ALTERING ENGINEER SHALL AFFIX TO THE ITEM HIS SEAL AND THE NOTATION "ALTERED BY" FOLLOWED BY HIS SIGNATURE, THE DATE, AND A SPECIFIC DESCRIPTION OF THE ALTERATION.

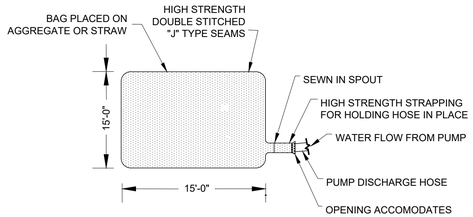

TOP VIEW

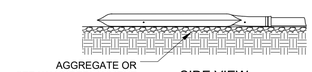

SIDE VIEW

NOTES:
1. SILT CONTROL SYSTEM TO BE USED IN CONJUNCTION WITH PUMP AROUND IF DEEMED NECESSARY BY SEDIMENT CONTROL INSPECTOR TO TREAT ANY SEDIMENT-LADEN WATER WITHIN THE DRY WORK AREA.
2. GEOTEXTILE FILTER BAG SHALL BE PLACED AT LEAST 50 FT FROM ALL WETLANDS, STREAMS, OR OTHER SURFACE WATERS.

DEWATERING/FILTER BAG MATERIALS SPECIFICATIONS:

THE DEWATERING/FILTER BAG SHALL BE MADE OF NON-WOVEN GEOTEXTILE WITH A MINIMUM SURFACE AREA OF 225 SQUARE FEET PER SIDE. ALL STRUCTURAL SEAMS SHALL BE SEWN WITH A DOUBLE STITCH USING A DOUBLE NEEDLE MACHINE WITH HIGH STRENGTH THREAD. THE SEAM STRENGTH SHALL WITHSTAND 100LB/IN USING ASTM D-4884 TEST METHOD. THE DEWATERING/FILTER BAG SHALL HAVE A NOZZLE LARGE ENOUGH TO ACCOMMODATE A FOUR INCH DISCHARGE HOSE. THE NOZZLE SHALL BE SEALED TIGHTLY AROUND THE DISCHARGE HOSE WITH A STRAP OR SIMILAR DEVICE TO PREVENT UNTREATED WATER FROM ESCAPING. THE GEOTEXTILE FABRIC SHALL BE A NON-WOVEN FABRIC WITH THE FOLLOWING PROPERTIES:

WEIGHT	ASTM D-3776	10 OZ/YD
GRAB TENSILE	ASTM D-4632	270 LBS
PUNCTURE	ASTM D-4833	150 LBS
FLOW RATE	ASTM D-4491	70 GAL/MIN/SQ FT
PERMITIVITY	ASTM D-4991	1/1.3 SEC
UV RESISTANCE	ASTM D-4355	70%
AOS % RETAINED	ASTM D-4751	100

CONSTRUCTION:

THE DEWATERING/FILTER BAG SHALL BE INSTALLED OVER A 3 INCH GRAVEL BASE OR A STRAW BALE BASE TO PROMOTE INFILTRATION AND DEWATERING OF THE FILTER BAG.

GEOTEXTILE FILTER BAG

NTS

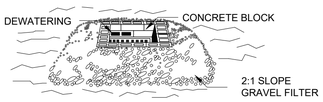

STONE & BLOCK PLAN VIEW

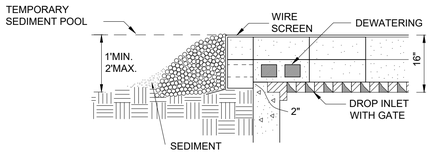

STONE & BLOCK DETAIL

CONSTRUCTION SPECIFICATIONS

1. LAY ONE BLOCK ON EACH SIDE OF THE STRUCTURE ON ITS SIDE FOR DEWATERING. FOUNDATION SHALL BE 2 INCHES MINIMUM BELOW REST OF INLET AND BLOCKS SHALL BE PLACED AGAINST INLET FOR SUPPORT.
2. HARDWARE CLOTH OR 1/2" WIRE MESH SHALL BE PLACED OVER BLOCK OPENINGS TO SUPPORT STONE.
3. USE CLEAN STONE OR GRAVEL 1/2-3/4 INCH IN DIAMETER PLACED 2 INCHES BELOW TOP OF THE BLOCK ON A 2:1 SLOPE OR FLATTER.
4. FOR STONE STRUCTURES ONLY, A 1 FOOT THICK LAYER OF THE FILTER STONE WILL BE PLACED AGAINST THE 3 INCH STONE AS SHOWN ON THE DRAWINGS.
5. MAXIMUM DRAINAGE AREA 1 ACRE.
6. INSERTS SHALL PROVIDE A MINIMUM OF 50-PERCENT OF THE OPENING, UNOBSTRUCTED DESIGN FLOW AREA OF THE STORM DRAIN INLET OPENING.

STONE & BLOCK DROP INLET PROTECTION

NTS

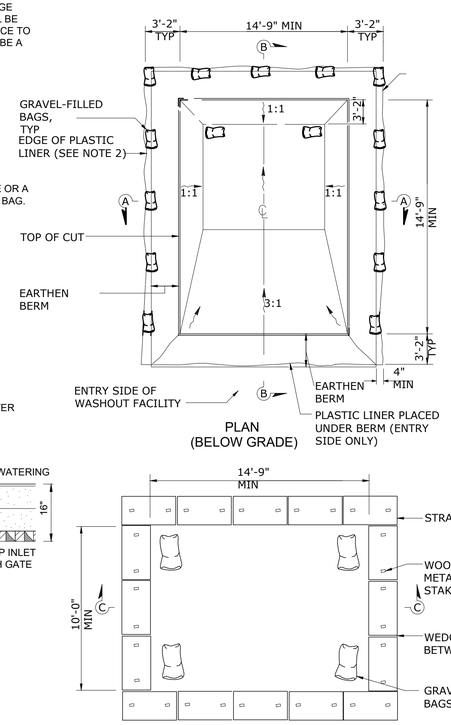

PLAN
(BELOW GRADE)

PLAN
(ON GRADE)

CONCRETE WASHOUT

NTS

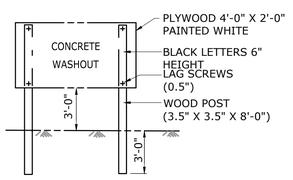

CONCRETE WASHOUT
SIGN DETAIL

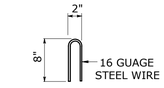

STAPLE DETAIL

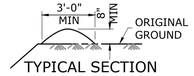

TYPICAL SECTION
EARTHEN BERM

NOTES:
1. THE CONCRETE WASHOUT SIGN SHALL BE INSTALLED WITHIN 32'-10" OF THE TEMPORARY CONCRETE WASHOUT FACILITY.
2. PLASTIC LINER SHALL HAVE A MINIMUM THICKNESS OF 10MIL AND SHALL BE ANCHORED WITH GRAVEL-FILLED BAGS FOR BELOW GRADE CONCRETE WASHOUT FACILITY.
3. CONCRETE WASHOUT SHALL BE LOCATED A MINIMUM OF 100-FEET FROM DRAINAGE SWALES, STORM DRAIN INLETS, WETLANDS, STREAMS, AND OTHER SURFACE WATERS

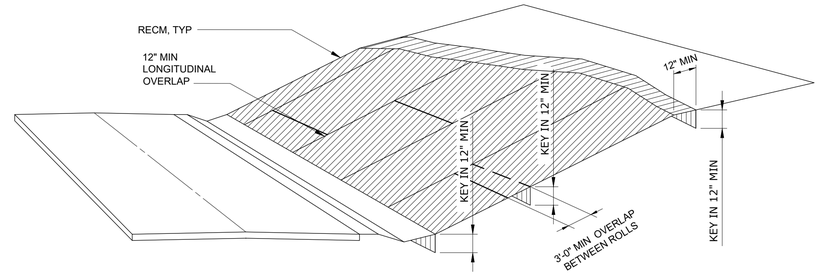

CONSTRUCTION SPECIFICATIONS:

1. BEGIN AT TOP OF SLOPE AND ANCHOR FIBER MATTING IN A 12 INCH DEEP INITIAL ANCHOR TRENCH. BACKFILL TRENCH AND TAMP EARTH FIRMLY.
2. UNROLL FIBER MATTING DOWNSLOPE IN THE DIRECTION OF WATER FLOW.
3. OVERLAP EDGES OF ADJACENT PARALLEL ROLLS A MINIMUM 12 INCHES AND ANCHOR AT 12 INCHES O.C.
4. WHEN FIBER MAT MUST BE SPLICED. PLACE END OVER END (SHINGLE STYLE) WITH 12 INCH OVERLAP AND ANCHOR USING TWO STAGGERED ROWS OF STAKES AT 6 INCHES O.C.
5. LAY FIBER MAT LOOSELY AND ANCHOR SUFFICIENTLY TO MAINTAIN DIRECT CONTACT WITH THE SOIL. DO NOT STRETCH.
6. FOR SLOPES 2:1 AND STEEPER, USE A MINIMUM 3 STAKES PER SQUARE YARD AND FOR SLOPES FLATTER THAN 2:1, USE A MINIMUM OF 2 STAKES PER SQUARE YARD.
7. ANCHOR, FILL, AND COMPACT END OF FIBER MATTING IN A 12X6 INCH TERMINAL ANCHOR TRENCH (MIRROR IMAGE OF EXISTING TRENCH).
8. MATTING MATERIALS SHALL BE BIODEGRADABLE AND 100% PLASTIC FREE.

EROSION CONTROL MATTING

NTS

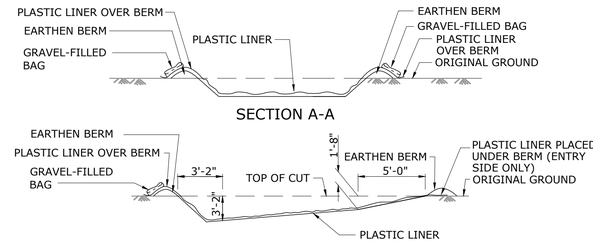

SECTION A-A

SECTION B-B

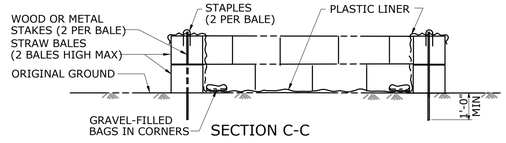

SECTION C-C

REV	ISSUED FOR	DATE	BY

PROJECT ENGINEER:	R. FROST
DESIGNED BY:	J. TANNER
DRAWN BY:	J. TANNER
CHECKED BY:	D. SHEERAN
IF THIS BAR DOES NOT MEASURE 1" THEN DRAWING IS NOT TO FULL SCALE	0 1/2" 1"

BID SET



Hazen

HAZEN AND SAWYER
498 SEVENTH AVENUE, 11th FLOOR
NEW YORK, NEW YORK 10018

WESTCHESTER JOINT WATER WORKS
MAMARONECK, NY

RYE LAKE WATER FILTRATION PLANT
HARRISON, NY

CIVIL
EROSION AND SEDIMENT CONTROL DETAILS

DATE:	FEB 2025
HAZEN NO.:	90388-000
CONTRACT NO.:	A1364-A
DRAWING NUMBER:	C-302

File: C:\USERS\JTANNER\DC\ACCDOCS\HAZEN AND SAWYER\90388-000_RYE_LAKE_FILTRATION\PROJECT FILES\PROJECTWISE\CIVIL\C-302 Saved by JTANNER Save date: 2/10/2025 10:24 AM
PLOT DATE: 3/27/2025 12:05 AM BY: JTANNER

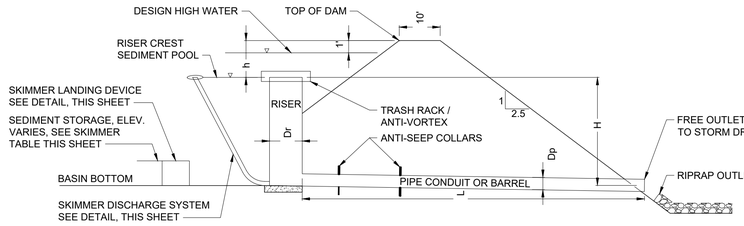

BASIN ID	BOTTOM OF BASIN ELEVATION	TOP OF DAM ELEVATION	TOP OF SEDIMENT STORAGE ZONE ELEVATION	TOP OF DEWATERING ZONE, RISER CREST ELEVATION	H (FT)	h (FT)	L (FT)	Dp (IN)	Dr (IN)
1	394.00	399.35	395.00	398.00	10.28	1.35	60.00	15.00	72.00
2	393.00	399.00	394.00	397.00	8.97	2.00	21.00	24.00	48.00

SEDIMENT BASIN PIPE SPILLWAY

NTS

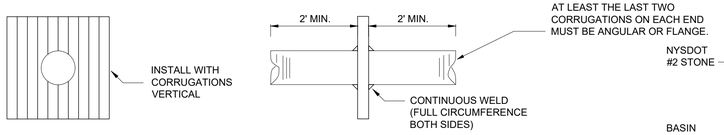

COLLAR WELDED IN PLACE ON BARREL SECTION

1. PLATES TO BE PRE-CUT CLAMPED TOGETHER & PRE-DRILLED & LABELED TO FACILITATE WATER TIGHT FIELD ASSEMBLY.

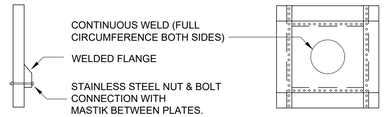

MULTI-PIECE COLLAR FOR LARGE PIPES



COLLAR FOR FLANGE JOINT PIPE

BASIN ID	# OF COLLARS	COLLAR SIZE (FT x FT)	COLLAR PROJECTION (FT)
1	4.00	3.33 x 3.33	1.10
2	4.00	3.33 x 3.33	1.10

ANTI SEEP COLLAR

NTS

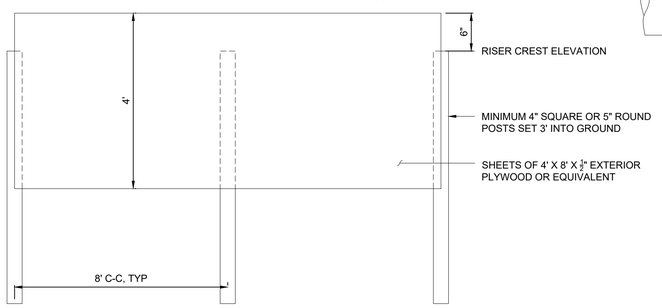

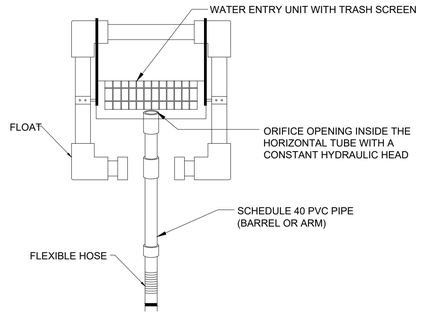

SKIMMER PLAN VIEW

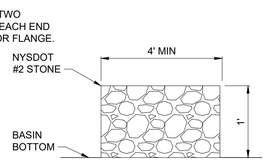

SKIMMER LANDING DEVICE

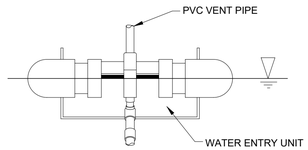

SKIMMER PROFILE VIEW

CONSTRUCTION NOTES

1. PIPE FLOTATION SECTION SHALL BE SOLVENT WELDED TO ENSURE AN AIRTIGHT ASSEMBLY. THE CONTRACTOR IS REQUIRED TO CONDUCT A TEST TO CHECK FOR LEAKS PRIOR TO INSTALLATION.
2. SKIMMER SECTION SHALL HAVE 12 ROW OF ½" DIAMETER HOLES, 1 ¼" ON CENTER. IF ADDITIONAL FILTRATION IS NECESSARY, THE FILTERING MEDIA SHALL CONSIST OF A TYPE GD-II GEOTEXTILE FABRIC WRAPPED AROUND THE PERFORATED PORTION OF THE SKIMMER AND ATTACHED WITH PLASTIC SNAP TIES, BANDS, ETC.
3. FLEXIBLE PIPE SHALL BE INSERTED INTO SOLID PIPE AND FASTENED WITH 2 #8 WOOD SCREWS.
4. AT A MINIMUM, THE STRUCTURE SHALL BE INSPECTED AFTER EACH RAIN AND REPAIRS MADE AS NEEDED. IF VANDALISM IS A PROBLEM, MORE FREQUENT INSPECTION MAY BE NECESSARY.
5. CONSTRUCTION OPERATION SHALL BE CARRIED OUT IN SUCH A MANNER THAT EROSION AND WATER POLLUTION ARE MINIMIZED.
6. THE STRUCTURE SHALL ONLY BE REMOVED WHEN THE CONTRIBUTING DRAINAGE AREA HAS BEEN PROPERLY STABILIZED.

BASIN ID	WATER SURFACE ELEVATION	ARM LENGTH (FT)	ARM DIAMETER (IN)	ORIFICE SIZE (IN)	TOP OF LANDING DEVICE ELEVATION	FLEXIBLE HOSE LENGTH (IN)	FLEXIBLE HOSE ATTACHMENT ELEVATION
1	398.35	12.00	3.00	3.00	395.00	72.00	394.00
2	397	13.00	3.00	3.00	394.00	72.00	393.00

SKIMMER DISCHARGE SYSTEM

NTS

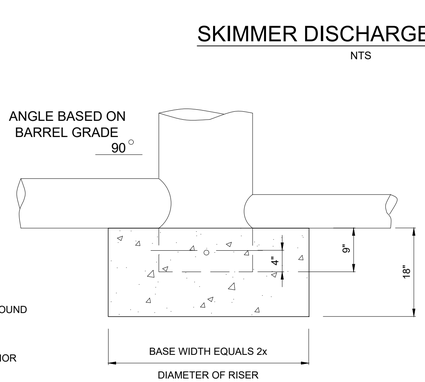

CONSTRUCTION NOTES

1. THE CONCRETE BASE SHALL BE POURED IN SUCH A MANNER TO INSURE THAT THE CONCRETE FILLS THE BOTTOM OF THE RISER TO THE INVERT OF THE OUTLET PIPE TO PREVENT THE RISER FROM BREAKING AWAY FROM THE BASE.
2. WITH ALUMINUM OR ALUMINIZED PIPE, THE EMBEDDED SECTION MUST BE PAINTED WITH CHROMATE OR EQUIVALENT.
3. RISER BASE MAY BE SIZED AS COMPUTED USING FLOATATION WITH A FACTOR OF SAFETY OF 1.2.

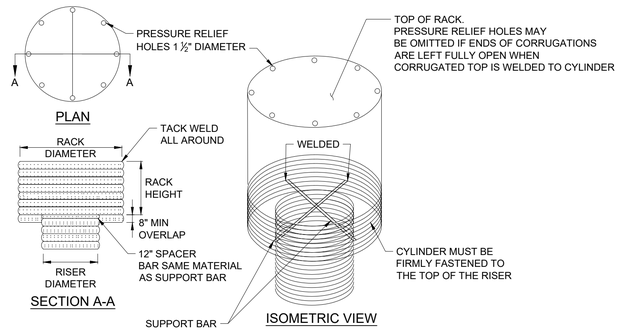

CONSTRUCTION NOTES

1. THE CYLINDER MUST BE FIRMLY FASTENED TO THE TOP OF THE RISER.
2. SUPPORT BARS ARE WELDED TO THE TOP OF THE RISER OR ATTACHED BY STRAPS BOLTED TO TOP OF RISER.

BASIN ID	RISER DIAMETER (IN)	RACK DIAMETER (IN)	RACK HEIGHT (IN)	THICKNESS GAGE	MINIMUM SUPPORT SIZE SUPPORT BAR	MINIMUM TOP	
						THICKNESS	STIFFENER
1	72	102	36	10	2" PIPE OR 2 x 2 x 3/16 ANGLE W/ STIFFENER	8 ga.	2 x 2 x ¼ ANGLE
2	48	72	21	12	1-¼" PIPE OR 1-½ x 1-½ x ¼ ANGLE	10 ga.	-

CONCENTRIC TRASH RACK AND ANTI-VORTEX DEVICE DETAIL

NTS

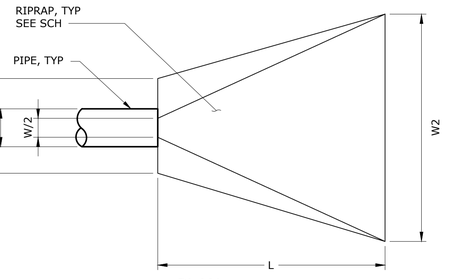

PLAN

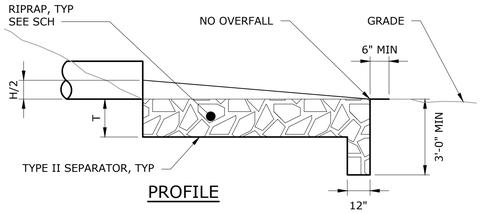

PROFILE

RIPRAP OUTLET PROTECTION

NTS

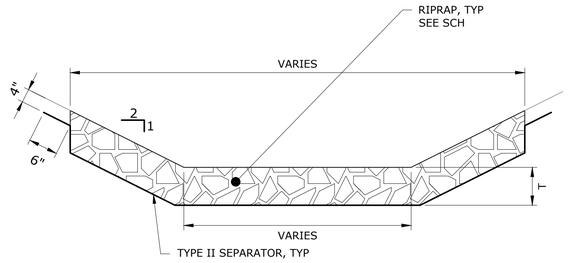

CROSS-SECTION

NOTES:

1. DETAIL AND SCHEDULE PROVIDE MINIMUM DIMENSIONS. SEE CONTRACT DWGS FOR LOCATIONS, EXTENTS, AND SHAPE OF RIPRAP OUTLET PROTECTION.
2. RIPRAP SHALL BE COMPOSED OF A WELL-GRADED MIXTURE OF ROCK SIZE SO THAT 50 PERCENT OF THE PIECES, BY WEIGHT SHALL BE LARGER THAN THE D50 SIZE. WELL-GRADED MIXTURE IS DEFINED AS A MIXTURE COMPOSED OF PRIMARILY LARGER ROCK SIZES, BUT WITH SUFFICIENT MIXTURE OF OTHER SIZES TO FILL THE SMALLER VOIDS BETWEEN THE ROCKS.

SCHEDULE OF DIMENSIONS

PIPE	H	W	W1	W2	L	T	D_{50}	D_{MAX}
SD AND OF OUTFALL	SEE GRADING PLANS					20"	9"	14"
WETLAND SPILLWAY	2'	--	8'	26'	22'	20"	9"	14"
FOREBAY HEADWALL	SEE GRADING PLANS					20"	9"	14"
GALLERY DRAIN	1.25'	--	9'	18.5'	17'	20"	9"	14"
CD-1	1'	--	12'	24'	20'	20"	9"	14"
CD-2	1'	--	12'	24'	20'	20"	9"	14"

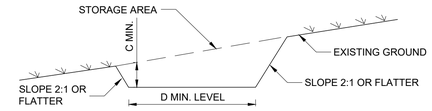

CROSS SECTION

POSITIVE DRAINAGE: 0.5% OR STEEPER DEPENDENT ON TOPOGRAPHY

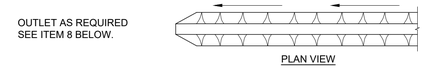

PLAN VIEW

CONSTRUCTION DITCH SCHEDULE						
DITCH ID	DITCH WIDTH (D)	DITCH DEPTH (C)	SWALE TYPE	TYPE OF TREATMENT	SIDE SLOPES	SLOPE
CD-1	4 FT	1 FT	A	2	2:1	< 5%
CD-2	4 FT	1 FT	A	2	2:1	< 5%

CONSTRUCTION SPECIFICATIONS

1. ALL CONSTRUCTION DITCHES SHALL HAVE UNINTERRUPTED POSITIVE GRADE TO AN OUTLET.
2. DIVERTED RUNOFF FROM A DISTURBED AREA SHALL BE CONVEYED TO A SEDIMENT TRAPPING DEVICE.
3. DIVERTED RUNOFF FROM AN UNDISTURBED AREA SHALL OUTLET DIRECTLY INTO AN UNDISTURBED STABILIZED AREA AT NON-EROSIVE VELOCITY.
4. ALL TREES, BRUSH, STUMPS, OBSTRUCTIONS, AND OTHER OBJECTIONABLE MATERIAL SHALL BE REMOVED AND DISPOSED OF SO AS NOT TO INTERFERE WITH THE PROPER FUNCTIONING OF THE SWALE.
5. THE DITCH SHALL BE EXCAVATED OR SHAPED TO LINE, GRADE, AND CROSS SECTION AS REQUIRED TO MEET THE CRITERIA SPECIFIED HEREIN AND BE FREE OF BANK PROJECTIONS OR OTHER IRREGULARITIES WHICH WILL IMPEDE NORMAL FLOW.
6. FILLS SHALL BE COMPACTED BY EARTH MOVING EQUIPMENT.
7. ALL EARTH REMOVED AND NOT NEEDED FOR CONSTRUCTION SHALL BE PLACED SO THAT IT WILL NOT INTERFERE WITH THE FUNCTIONING OF THE DITCH.
8. STABILIZATION SHALL BE AS PER THE FLOW CHANNEL STABILIZATION CHART BELOW:

TYPE OF TREATMENT	CHANNEL GRADE	SWALE TYPE A (5 AC. OR LESS)	SWALE TYPE B (5 AC. - 10 AC)
1	0.5 - 3.0%	SEED AND STRAW MULCH	SEED AND STRAW MULCH
2	3.1 - 5.0%	SEED AND STRAW MULCH	SEED AND COVER USING RECP
3	5.1 - 8.0%	SEED AND COVER WITH RECP	LINED WITH 4-8" RIP-RAP OR GEOTEXTLE
4	8.1 - 10.%	LINED WITH 4-8" RIP-RAP OR GEOTEXTILE	SITE SPECIFIC DESIGN

9. PERIODIC INSPECTION AND REQUIRED MAINTENANCE MUST BE PROVIDED AFTER EACH RAIN EVENT.

CONSTRUCTION DITCH

NTS

WARNING
IT IS A VIOLATION OF SECTION 7209.2 OF THE NEW YORK STATE EDUCATION LAW FOR ANY PERSON, UNLESS ACTING UNDER THE DIRECTION OF A LICENSED PROFESSIONAL ENGINEER, TO ALTER IN ANY WAY PLANS, SPECIFICATIONS, PLATS OR REPORTS TO WHICH THE SEAL OF A PROFESSIONAL ENGINEER HAS BEEN APPLIED. IF AN ITEM BEARING THE SEAL OF A PROFESSIONAL ENGINEER IS ALTERED, THE ALTERING ENGINEER SHALL AFFIX TO THE ITEM HIS SEAL AND THE NOTATION "ALTERED BY" FOLLOWED BY HIS SIGNATURE, THE DATE, AND A SPECIFIC DESCRIPTION OF THE ALTERATION.

SEDIMENT BASIN BAFFLE

NTS

RISER BASE SEDIMENT BASIN DETAIL

NTS

REV	ISSUED FOR	DATE	BY

PROJECT ENGINEER: R. FROST
DESIGNED BY: J. TANNER
DRAWN BY: J. TANNER
CHECKED BY: D. SHEERAN
IF THIS BAR DOES NOT MEASURE 1" THEN DRAWING IS NOT TO FULL SCALE 0 1/2" 1"

BID SET

STATE OF NEW YORK — CHRISTOPHER JAMES SHEERAN — 088955 — LICENSED PROFESSIONAL ENGINEER

Hazen

HAZEN AND SAWYER
498 SEVENTH AVENUE, 11th FLOOR
NEW YORK, NEW YORK 10018

WESTCHESTER JOINT WATER WORKS
MAMARONECK, NY

RYE LAKE WATER FILTRATION PLANT
HARRISON, NY

CIVIL
EROSION AND SEDIMENT CONTROL DETAILS

DATE: FEB 2025
HAZEN NO.: 90388-000
CONTRACT NO.: A1364-A
DRAWING NUMBER: C-303

File: C:\USERS\JTANNER\DC\ACCDOCS\HAZEN AND SAWYER\90388-000_RYE_LAKE_FILTRATION\PROJECT FILES\PROJECTWISE\CIVIL\C-303 Saved by JTANNER Save date: 2/10/2025 10:23 AM
PLOT DATE: 3/27/2025 12:05 AM BY: JTANNER

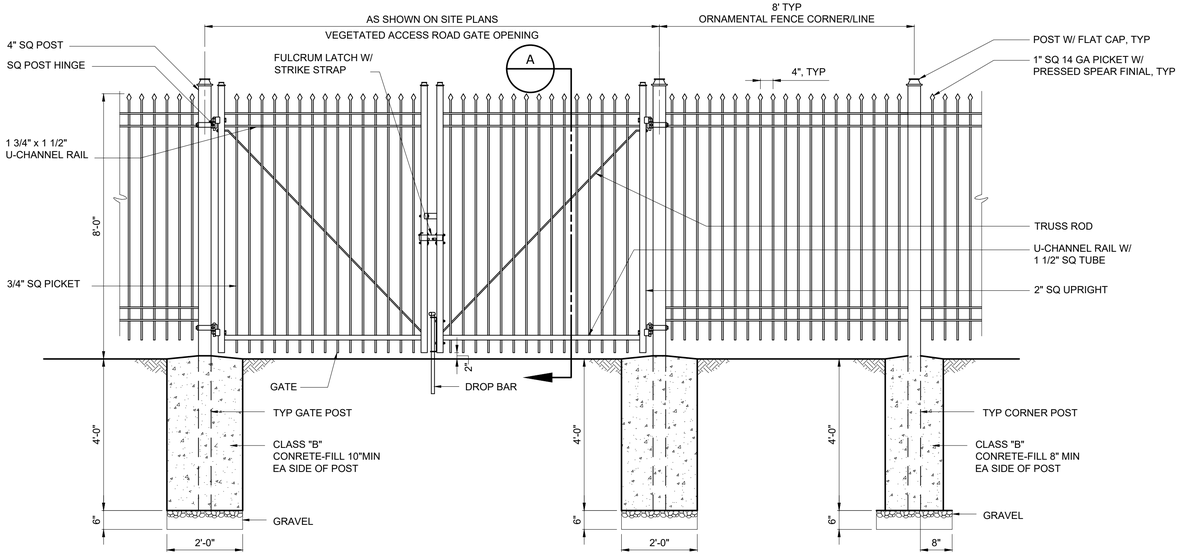

ORNAMENTAL FENCE

NOTES:

1. PROVIDE LATCHING DEVICES TO HOLD GATE IN OPEN POSITION.
2. IF ROCK IS ENCOUNTERED WHEN SETTING POSTS, DRILL HOLES 4" ARGER IN DIA. THAN POSTS AND BACKFILL TO GRADE WITH CLASS "B" CONCRETE.
3. SEE SPECIFICATION 32-31-19 FOR ADDITIONAL INFORMATION.

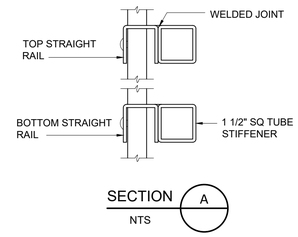

SECTION A
NTS

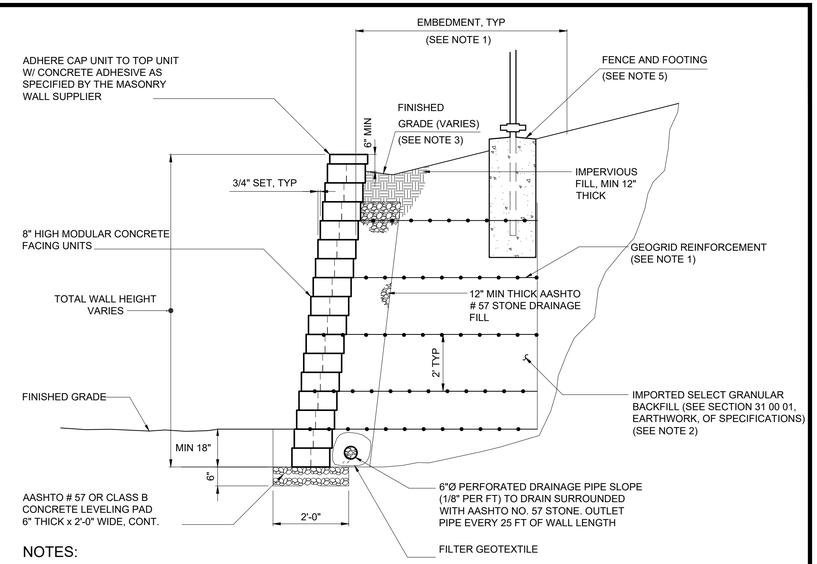

NOTES:

1. GEOGRID REINFORCEMENT MATERIAL AND EMBEDMENT LENGTH TO BE ESTABLISHED BY PROFESSIONAL ENGINEER REGISTERED IN THE STATE OF NEW YORK BASED UPON CURRENT AND PROJECTED LOADINGS AND PROPER DRAINAGE. MINIMUM GEOGRID LENGTH TO BE 0.75 TIMES THE MAXIMUM WALL HEIGHT AND TO BE UNIFORM FOR ALL LAYERS. SEE SPECIFICATION 31 34 19.13.
2. WALL BACKFILL MATERIAL USED IN DESIGN SHALL BE ON-SITE MATERIAL OR MATERIAL MATCHING WALL DESIGN PARAMETERS SHALL BE SUPPLIED BY CONTRACTOR AT NO ADDITIONAL COST. IT SHOULD BE ASSUMED BACKFILL MATERIAL IS NOT AVAILABLE ON SITE. SEE SPECIFICATION SECTION 32 32 35 FOR BACKFILL SPECIFICATIONS.
3. PROVIDE POSITIVE DRAINAGE AWAY FROM BACK OF WALL.
4. INCLUDE SUBGRADE LOADING FOR PARKING AREA WHERE APPLICABLE. DESIGN TO ACCOMMODATE H-20 LOADING AS MINIMUM.
5. PROVIDE ADDITIONAL SPACE BEHIND THE RETAINING WALL TO INSTALL FENCE AND FOOTINGS.

MSE RETAINING WALL
C-32-0580

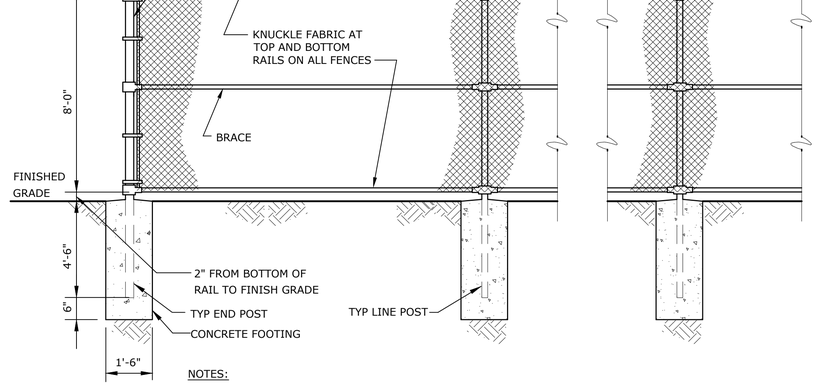

NOTES:

1. GATES SHALL BE IN ACCORDANCE WITH THE DETAILS ON THE ARCH DRAWINGS.
2. FENCE SHALL BE POLYOLEFIN COATED CHAIN LINK FENCE PER SPECIFICATION 32 31 13.
3. ORIENTATION AND LIMIT OF PERIMETER FENCE SHALL BE INSTALLED PER DWGS AND AS DIRECTED BY ENGINEER.
4. IF ROCK IS ENCOUNTERED WHEN SETTING POSTS, DRILL HOLES 4 INCHES LARGER IN DIAMETER THAN POSTS AND BACKFILL TO GRADE WITH CLASS "B" CONCRETE.

TYPICAL PERIMETER FENCE
NTS

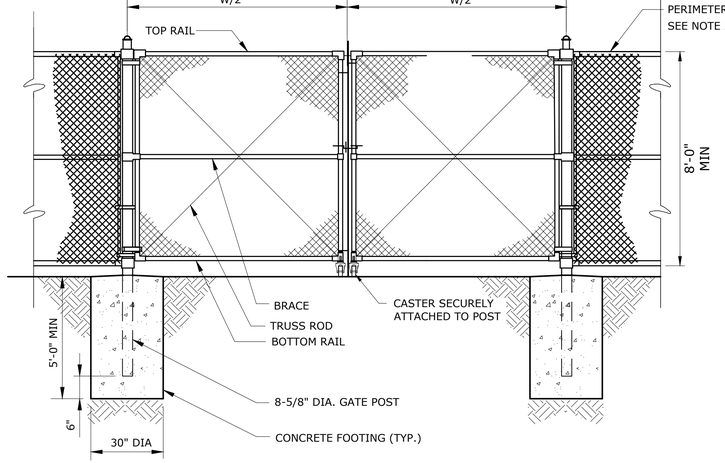

NOTES:

1. PROVIDE LATCHING DEVICES TO HOLD GATES IN OPEN POSITION AND PADLOCK MASTER LOCK NUMBER 12 OR EQUAL TO LOCK GATES CLOSED.
2. ORIENTATION AND LIMIT OF PERIMETER FENCE SHALL BE INSTALLED AS DIRECTED BY ENGINEER.
3. IF ROCK IS ENCOUNTERED WHEN SETTING POSTS, DRILL HOLES 1/2" INCH LARGER IN DIAMETER THAN POSTS AND BACKFILL TO GRADE WITH CLASS "B" CONCRETE.

TYPICAL CHAIN LINK FENCE GATE
NTS

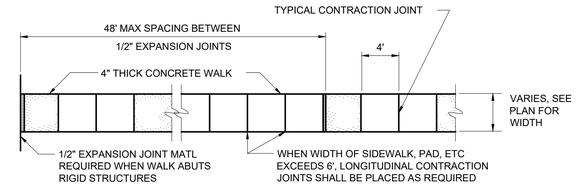

TYPICAL CONCRETE WALKWAY
C-32-0520

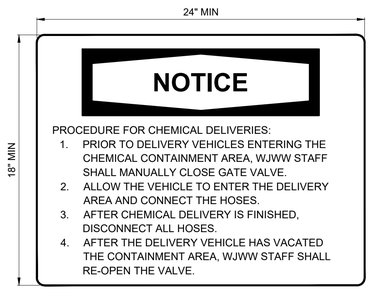

NOTES:

1. SIGN SHALL BE IN ACCORDANCE WITH SPECIFICATION SECTION 10 14 01 - IDENTIFYING DEVICES.
2. SEE DWG C-141 AND A-012 FOR SIGN LOCATION.

CONTAINMENT AREA SIGN
NTS

WARNING
IT IS A VIOLATION OF SECTION 7209.2 OF THE NEW YORK STATE EDUCATION LAW FOR ANY PERSON, UNLESS ACTING UNDER THE DIRECTION OF A LICENSED PROFESSIONAL ENGINEER, TO ALTER IN ANY WAY PLANS, SPECIFICATIONS, PLATS OR REPORTS TO WHICH THE SEAL OF A PROFESSIONAL ENGINEER HAS BEEN APPLIED. IF AN ITEM BEARING THE SEAL OF A PROFESSIONAL ENGINEER IS ALTERED, THE ALTERING ENGINEER SHALL AFFIX TO THE ITEM HIS SEAL AND THE NOTATION "ALTERED BY" FOLLOWED BY HIS SIGNATURE, THE DATE, AND A SPECIFIC DESCRIPTION OF THE ALTERATION.

REV	ISSUED FOR	DATE	BY

PROJECT ENGINEER:	R. FROST
DESIGNED BY:	J. TANNER
DRAWN BY:	J. TANNER
CHECKED BY:	D. SHEERAN

IF THIS BAR DOES NOT MEASURE 1" THEN DRAWING IS NOT TO FULL SCALE (0 1/2" 1")

BID SET



Hazen

HAZEN AND SAWYER
498 SEVENTH AVENUE, 11th FLOOR
NEW YORK, NEW YORK 10018

WESTCHESTER JOINT WATER WORKS
MAMARONECK, NY

RYE LAKE WATER FILTRATION PLANT
HARRISON, NY

CIVIL
SITE DETAILS

DATE:	FEB 2025
HAZEN NO.:	90388-000
CONTRACT NO.:	A1364-A
DRAWING NUMBER:	C-304

File: C:\USERS\JTANNER\DC\ACCDOCS\HAZEN AND SAWYER\90388-000_RYE_LAKE_FILTRATION\PROJECT FILES\PROJECTWISE\CIVIL\C-304 Saved by JTANNER Save date: 2/10/2025 10:22 AM
PLOT DATE: 3/27/2025 12:05 AM BY: JTANNER

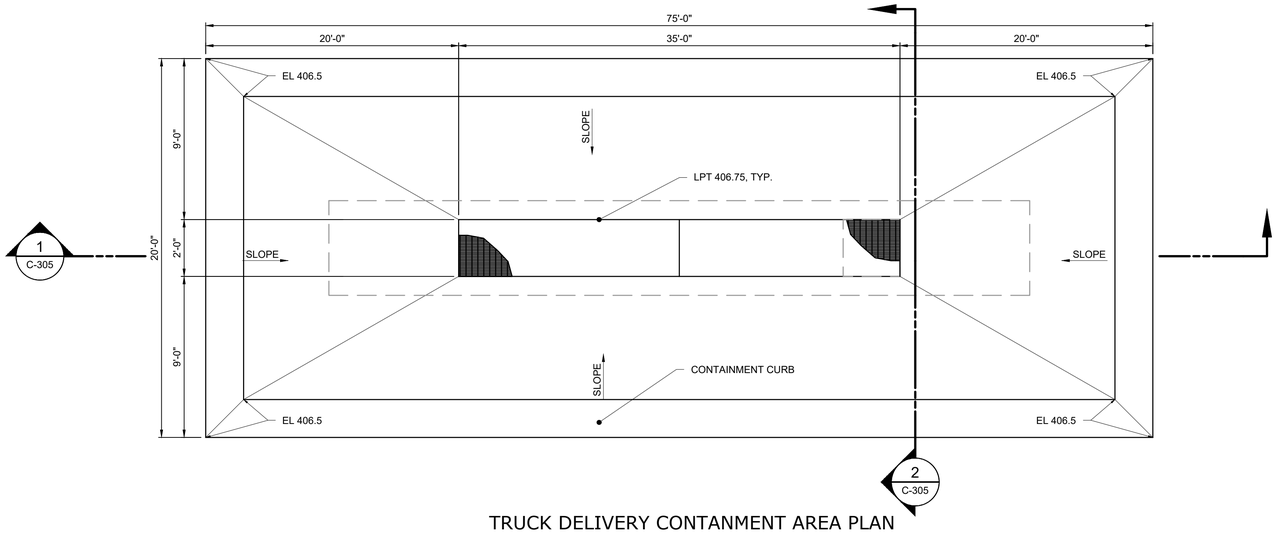

TRUCK DELIVERY CONTANMENT AREA PLAN

1/4"=1'=0"

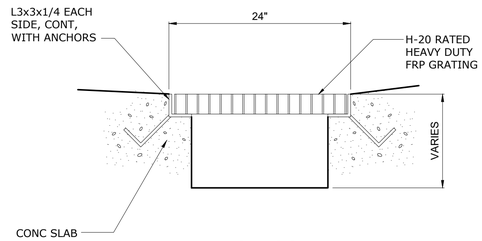

TRENCH COVER

NTS

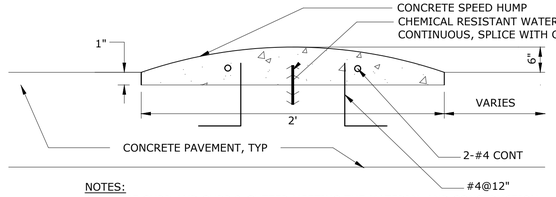

NOTES:

1. USE CURB AND CURB & GUTTER MEETING THE MATERIAL AND CONSTRUCTION REQUIREMENTS OF SECTION 609 OF THE NEW YORK STATE DEPARTMENT OF TRANSPORTATION STANDARD SPECIFICATIONS.

CONTAINMENT CURB

NTS

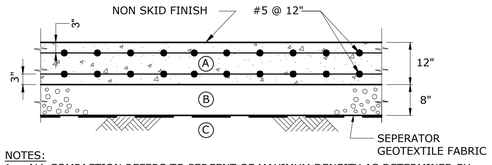

NOTES:

1. ALL COMPACTION REFERS TO PERCENT OF MAXIMUM DENSITY AS DETERMINED BY ASTM D-1557 METHOD D, SEE NOTES.
2. CONCRETE SHALL BE 4,500 PSI.
3. REINFORCING SHALL BE #5 @ 12" C/C AT DEPTH OF 3" FROM TOP OF COURSE AND 3" FROM BOTTOM OF COURSE.

KEY:
- (A) = CONCRETE PAVEMENT
- (B) = BASE COURSE COMPACTED TO 95%
- (C) = SUBGRADE COMPACTED TO 95%

CONCRETE PAVEMENT SECTION

NTS

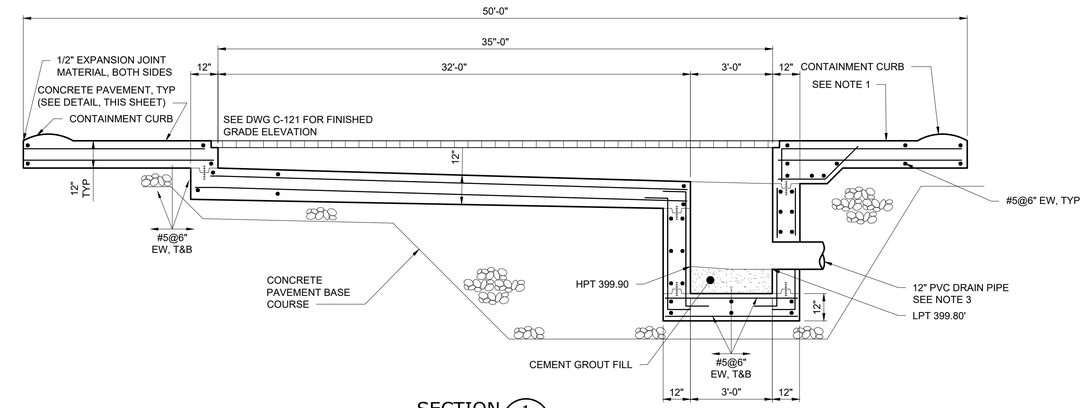

SECTION 1

NTS C-352

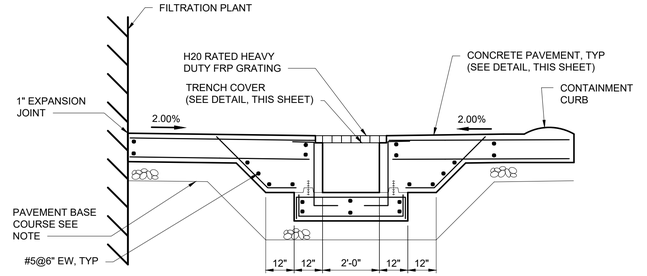

SECTION 2

NTS C-352

NOTE:

1. APPLY CONCRETE TOPPING ON ALL CONCRETE SURFACES WITHIN THE AREA ENCLOSED BY SPEED HUMPS AND EDGE OF BUILDING AS PART OF THE SECONDARY CONTAINMENT AREA IN ACCORDANCE WITH SPECIFICATION 099700 - SPECIAL COATINGS.
2. PAVEMENT BASE COURSE SHALL BE PER SPECIFICATION 321000 - PAVING AND SURFACING.
3. PIPE PENETRATION SHALL BE SEALED USING A LINK-SEAL, AS MANUFACTURED BY GPT, OR APPROVED EQUAL.

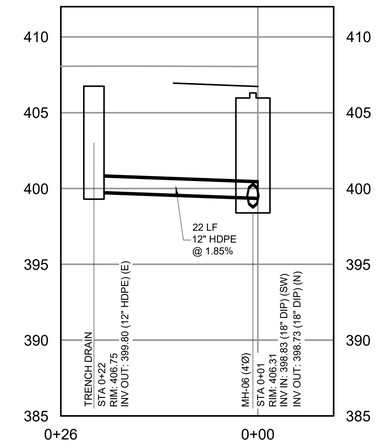

TRENCH DRAIN OUTLET PROFILE

HORIZONTAL SCALE: 1" = 10'
VERTICAL SCALE: 1" = 5'

SCALE: 1" = 5'

5 2.5 0 5'

SCALE: 1" = 10'

10 5 0 10'

WARNING
IT IS A VIOLATION OF SECTION 7209.2 OF THE NEW YORK STATE EDUCATION LAW FOR ANY PERSON, UNLESS ACTING UNDER THE DIRECTION OF A LICENSED PROFESSIONAL ENGINEER, TO ALTER IN ANY WAY PLANS, SPECIFICATIONS, PLATS OR REPORTS TO WHICH THE SEAL OF A PROFESSIONAL ENGINEER HAS BEEN APPLIED. IF AN ITEM BEARING THE SEAL OF A PROFESSIONAL ENGINEER IS ALTERED, THE ALTERING ENGINEER SHALL AFFIX TO THE ITEM HIS SEAL AND THE NOTATION "ALTERED BY" FOLLOWED BY HIS SIGNATURE, THE DATE, AND A SPECIFIC DESCRIPTION OF THE ALTERATION.

REV	ISSUED FOR	DATE	BY

PROJECT ENGINEER:	R. FROST
DESIGNED BY:	J. TANNER
DRAWN BY:	J. TANNER
CHECKED BY:	D. SHEERAN

IF THIS BAR DOES NOT MEASURE 1" THEN DRAWING IS NOT TO FULL SCALE 0 1/2" 1"

BID SET

STATE OF NEW YORK — MATTHEW JAMES SHEERAN — 088955 — LICENSED PROFESSIONAL ENGINEER

Hazen

HAZEN AND SAWYER
498 SEVENTH AVENUE, 11th FLOOR
NEW YORK, NEW YORK 10018

WESTCHESTER JOINT WATER WORKS
MAMARONECK, NY

RYE LAKE WATER FILTRATION PLANT
HARRISON, NY

CIVIL
TRUCK DELIVERY CONTAINMENT DETAIL

DATE:	FEB 2025
HAZEN NO.:	90388-000
CONTRACT NO.:	A1364-A
DRAWING NUMBER:	C-305

File: C:\USERS\JTANNER\DOCAC\DOCS\HAZEN AND SAWYER\90388-000_RYE_LAKE_FILTRATION\PROJECT FILES\PROJECTWISE\CIVIL\C-305 Saved by JTANNER Save date: 3/27/2025 2:27 PM
PLOT DATE: 3/27/2025 2:27 PM BY: JTANNER

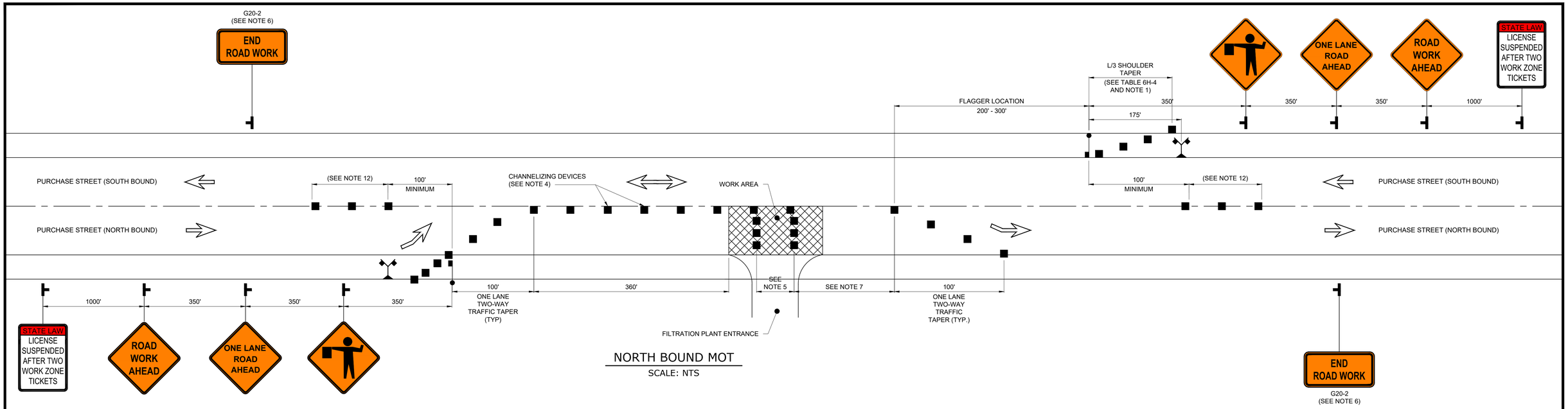

NORTH BOUND MOT

SCALE: NTS

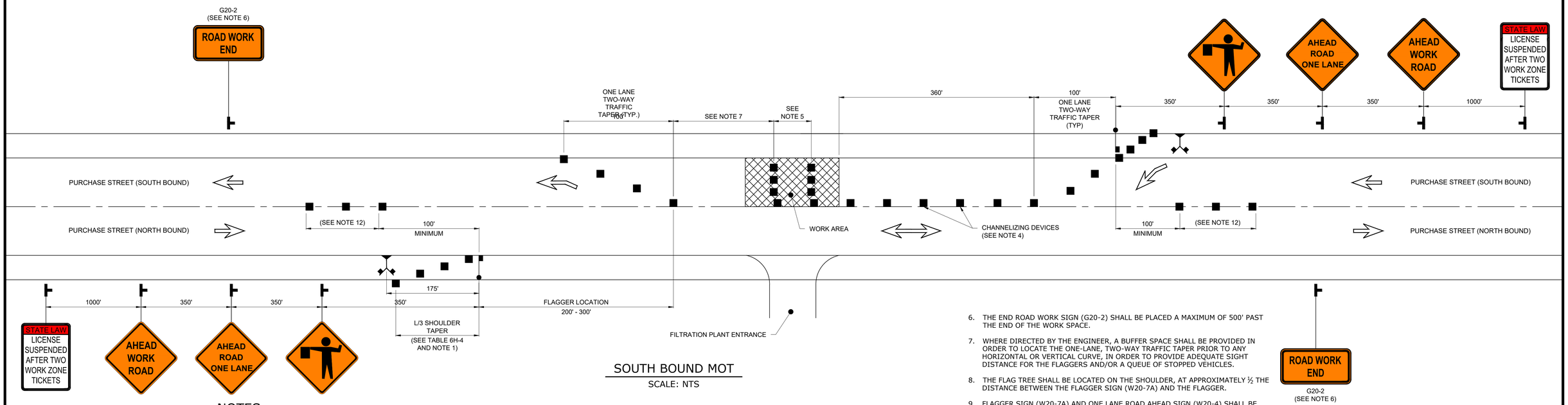

SOUTH BOUND MOT

SCALE: NTS

NOTES

1. WHEN PAVED SHOULDERS HAVING A WIDTH OF 8' OR MORE ARE CLOSED, CHANNELIZING DEVICES SHALL BE USED TO CLOSE THE SHOULDER IN ADVANCE TO DELINEATE THE BEGINNING OF THE WORK AREA AND DIRECT VEHICULAR TRAFFIC TO REMAIN IN THE TRAVEL WAY.
2. WHEN A SIDE ROAD OR DRIVEWAY INTERSECTS THE ROADWAY WITHIN A WORK ZONE TRAFFIC CONTROL AREA, ADDITIONAL TEMPORARY TRAFFIC CONTROL DEVICES AND/OR FLAGGERS SHALL BE PLACED AS NEEDED. ADDITIONAL FLAGGERS SHALL BE LOCATED AT ALL INTERSECTIONS AND COMMERCIAL DRIVEWAYS LOCATED WITHIN OR NEAR THE ACTIVE WORK SPACE.
3. NO WORK ACTIVITY, EQUIPMENT, OR STORAGE OF VEHICLES, OR MATERIAL SHALL OCCUR WITHIN THE BUFFER SPACE AT ANY TIME.
4. CHANNELIZING DEVICE SPACING (CENTER TO CENTER) SHALL NOT EXCEED 40' IN THE ACTIVE WORK SPACE.
5. TRANSVERSE DEVICES SHALL BE REQUIRED (AS PER 619 STANDARD SPECIFICATIONS) WHEN A PAVED SHOULDER HAVING A WIDTH OF 8' OR GREATER IS CLOSED FOR A DISTANCE GREATER THAN 1500'.
6. THE END ROAD WORK SIGN (G20-2) SHALL BE PLACED A MAXIMUM OF 500' PAST THE END OF THE WORK SPACE.
7. WHERE DIRECTED BY THE ENGINEER, A BUFFER SPACE SHALL BE PROVIDED IN ORDER TO LOCATE THE ONE-LANE, TWO-WAY TRAFFIC TAPER PRIOR TO ANY HORIZONTAL OR VERTICAL CURVE, IN ORDER TO PROVIDE ADEQUATE SIGHT DISTANCE FOR THE FLAGGERS AND/OR A QUEUE OF STOPPED VEHICLES.
8. THE FLAG TREE SHALL BE LOCATED ON THE SHOULDER, AT APPROXIMATELY ½ THE DISTANCE BETWEEN THE FLAGGER SIGN (W20-7A) AND THE FLAGGER.
9. FLAGGER SIGN (W20-7A) AND ONE LANE ROAD AHEAD SIGN (W20-4) SHALL BE REMOVED, COVERED OR TURNED AWAY FROM ROAD USERS WHEN FLAGGING OPERATIONS ARE NOT OCCURING.
10. FLAGGER AND FLAG TREE SHALL BE ILUMINATED TO LEVEL II ILLUMINATION DURING NIGHT TIME OPERATIONS.
11. ALL FLAGGERS SHALL USE 24" (MIN.) OCTAGON SHAPED STOP/SLOW PADDLES HAVING 6' STAFF.
12. CENTERLINE CHANNELIZING DEVICES ARE OPTIONAL AND MAY BE ELIMINATED WHERE SPACE CONSTRAINTS EXIST.

WARNING
IT IS A VIOLATION OF SECTION 7209.2 OF THE NEW YORK STATE EDUCATION LAW FOR ANY PERSON, UNLESS ACTING UNDER THE DIRECTION OF A LICENSED PROFESSIONAL ENGINEER, TO ALTER IN ANY WAY PLANS, SPECIFICATIONS, PLATS OR REPORTS TO WHICH THE SEAL OF A PROFESSIONAL ENGINEER HAS BEEN APPLIED. IF AN ITEM BEARING THE SEAL OF A PROFESSIONAL ENGINEER IS ALTERED, THE ALTERING ENGINEER SHALL AFFIX TO THE ITEM HIS SEAL AND THE NOTATION "ALTERED BY" FOLLOWED BY HIS SIGNATURE, THE DATE, AND A SPECIFIC DESCRIPTION OF THE ALTERATION.

REV	ISSUED FOR	DATE	BY

PROJECT ENGINEER: R. FROST
DESIGNED BY: J. TANNER
DRAWN BY: M. SEEBOLD
CHECKED BY: D. SHEERAN
IF THIS BAR DOES NOT MEASURE 1" THEN DRAWING IS NOT TO FULL SCALE 0 1/2" 1"

BID SET



Hazen
HAZEN AND SAWYER
498 SEVENTH AVENUE, 11th FLOOR
NEW YORK, NEW YORK 10018

WESTCHESTER JOINT WATER WORKS
MAMARONECK, NY

RYE LAKE WATER FILTRATION PLANT
HARRISON, NY

CIVIL
MAINTENANCE OF TRAFFIC DETAIL

DATE: FEB 2025
HAZEN NO.: 90388-000
CONTRACT NO.: A1364-A
DRAWING NUMBER: C-306

File: C:\USERS\JTANNER\DOCACCDOCS\HAZEN AND SAWYER\90388-000_RYE_LAKE_FILTRATION\PROJECT FILES\PROJECTWISE\CIVIL\LC-306 Saved by JTANNER Save date: 2/10/2025 10:20 AM
PLOT DATE: 3/27/2025 12:05 AM BY: JTANNER

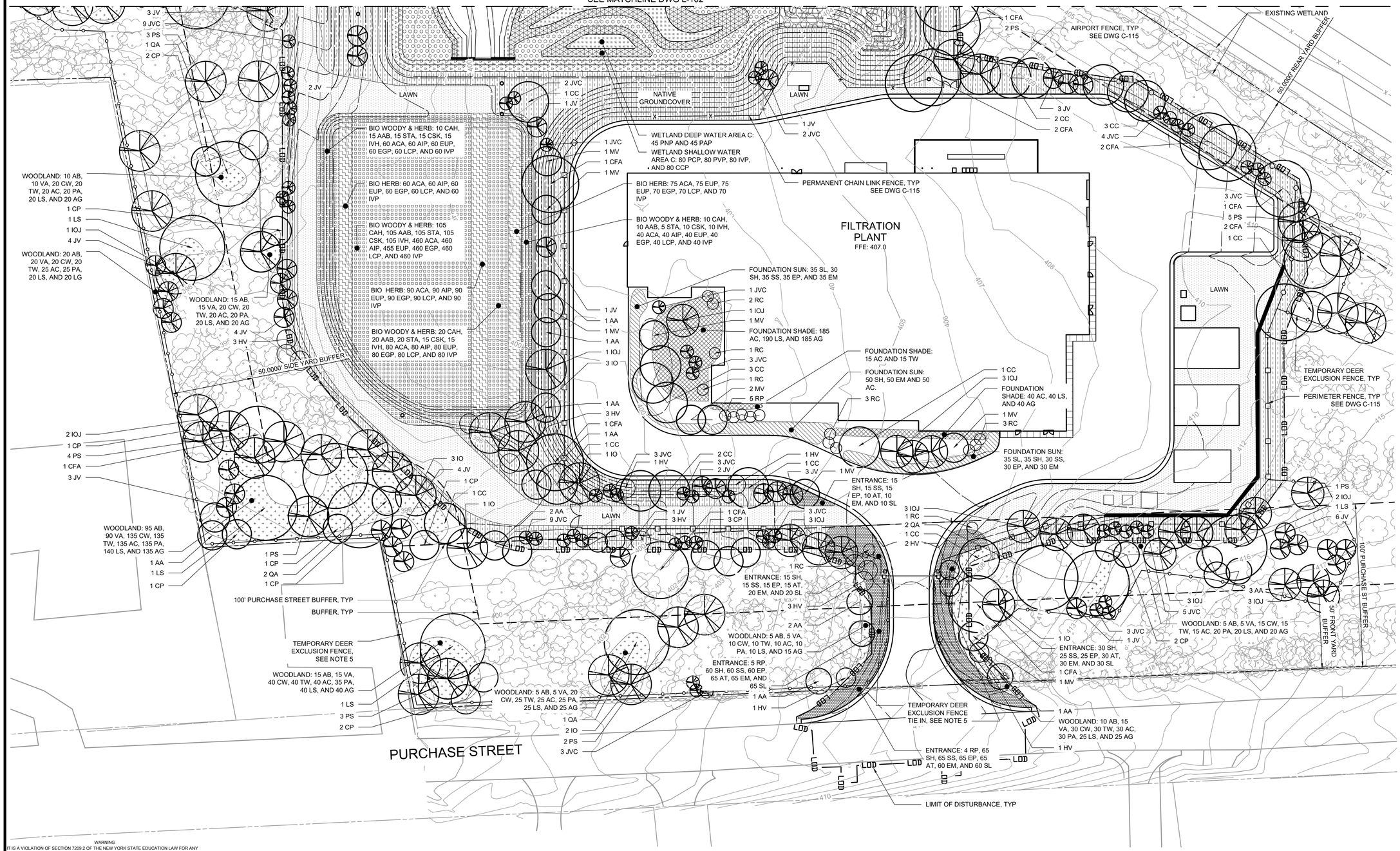

PLAN

SCALE: 1" = 30'

SCALE: 1" = 30'

30 15 0 30

NOTES:

1. SEE L-102 LANDSCAPE PLAN - SHEET 2 FOR PLANTING NOTES.
2. SEE L-301 FOR LANDSCAPE SCHEDULES.
3. SEE L-301 AND L-302 FOR SEEDING AND PLANTING DETAILS.
4. ALL WORK PERFORMED BETWEEN THE CONSTRUCTION/SILT FENCE AND TEMPORARY DEER EXCLUSION FENCE SHALL BE PERFORMED WITH HAND TOOLS ONLY. NO HEAVY MACHINERY SHALL BE PERMITTED.
5. TEMPORARY DEER EXCLUSION FENCE TO TIE INTO CHAIN LINK FENCE AND AIRPORT FENCE DURING CONSTRUCTION, SEE CIVIL DWG C-111, AND SHALL BE SIX (6) INCHES FROM THE ACTUATED SWINGING ACCESS GATE STONE COLUMNS AFTER REMOVAL OF THE CHAIN LINK FENCE GATES.

LEGEND

- ZONE 1 - LAWN
- ZONE 2 - NATIVE GROUNDCOVER
- ZONE 3 - ENTRANCE
- ZONE 4 - FOUNDATION PART SUN
- ZONE 5 - FOUNDATION SHADE
- ZONE 6 - WOODLAND
- ZONE 7 - BIORETENTION HERBACEOUS
- ZONE 8 - BIORETENTION WOODY AND HERBACEOUS
- ZONE 9 - WETLAND DEEP WATER
- ZONE 10 - WETLAND SHALLOW WATER BENCH
- ZONE 11 - WETLAND SHORELINE FRINGE
- ZONE 12 - WETLAND RIPARIAN FRINGE

WARNING
IT IS A VIOLATION OF SECTION 7209.2 OF THE NEW YORK STATE EDUCATION LAW FOR ANY PERSON, UNLESS ACTING UNDER THE DIRECTION OF A LICENSED PROFESSIONAL ENGINEER, TO ALTER IN ANY WAY PLANS, SPECIFICATIONS, PLATS OR REPORTS TO WHICH THE SEAL OF A PROFESSIONAL ENGINEER HAS BEEN APPLIED. IF AN ITEM BEARING THE SEAL OF A PROFESSIONAL ENGINEER IS ALTERED, THE ALTERING ENGINEER SHALL AFFIX TO THE ITEM HIS SEAL AND THE NOTATION "ALTERED BY" FOLLOWED BY HIS SIGNATURE, THE DATE, AND A SPECIFIC DESCRIPTION OF THE ALTERATION.

REV	ISSUED FOR	DATE	BY

PROJECT ENGINEER: R. FROST
DESIGNED BY: E. MOSKALENKO
DRAWN BY: E. MOSKALENKO
CHECKED BY: M. SANTOWASSO

IF THIS BAR DOES NOT MEASURE 1" THEN DRAWING IS NOT TO FULL SCALE 0 1/2" 1"

BID SET

REGISTERED LANDSCAPE ARCHITECT ELIZABETH ANN MOSKALENKO 002548-1 STATE OF NEW YORK

Hazen
HAZEN AND SAWYER
498 SEVENTH AVENUE, 11th FLOOR
NEW YORK, NEW YORK 10018

WESTCHESTER JOINT WATER WORKS
MAMARONECK, NY

RYE LAKE WATER FILTRATION PLANT
HARRISON, NY

LANDSCAPE
LANDSCAPE PLAN - SHEET 1

DATE: FEB 2025
HAZEN NO.: 90388-000
CONTRACT NO.: A1364-A
DRAWING NUMBER: L-101

File: C:\USERS\KCAMPOS\DCACCDOCS\HAZEN AND SAWYER\90388-000_RYE_LAKE_FILTRATION\PROJECT FILES\PROJECTWISE\LANDSCAPE\L-101 Saved by EMOSKALENKO Save date: 2/7/2025 5:08 PM
PLOT DATE: 2/7/2025 5:17 PM BY: KCAMPOS

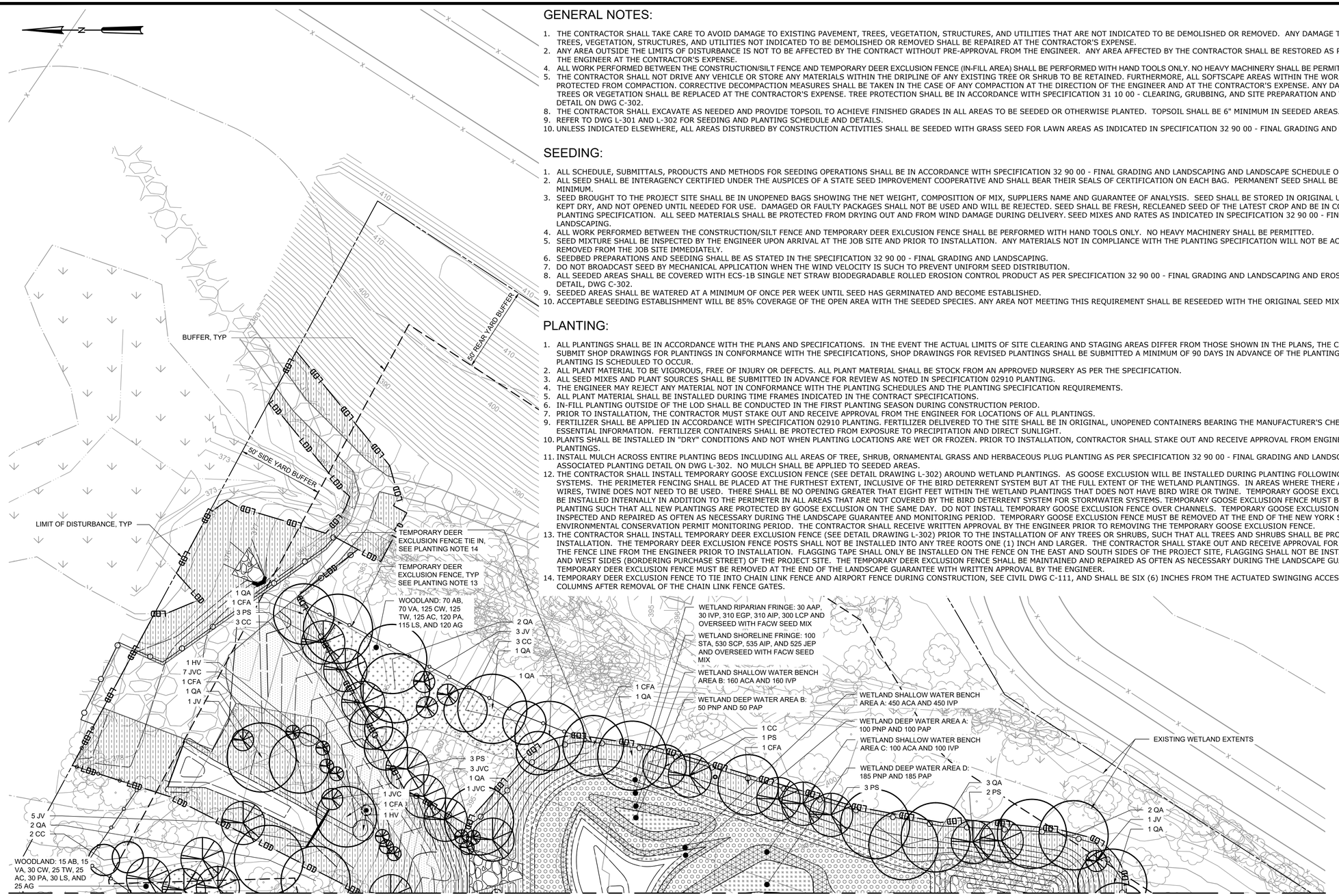

GENERAL NOTES:

1. THE CONTRACTOR SHALL TAKE CARE TO AVOID DAMAGE TO EXISTING PAVEMENT, TREES, VEGETATION, STRUCTURES, AND UTILITIES THAT ARE NOT INDICATED TO BE DEMOLISHED OR REMOVED. ANY DAMAGE TO EXISTING PAVEMENT, TREES, VEGETATION, STRUCTURES, AND UTILITIES NOT INDICATED TO BE DEMOLISHED OR REMOVED SHALL BE REPAIRED AT THE CONTRACTOR'S EXPENSE.
2. ANY AREA OUTSIDE THE LIMITS OF DISTURBANCE IS NOT TO BE AFFECTED BY THE CONTRACT WITHOUT PRE-APPROVAL FROM THE ENGINEER. ANY AREA AFFECTED BY THE CONTRACTOR SHALL BE RESTORED AS PER THE DIRECTION OF THE ENGINEER AT THE CONTRACTOR'S EXPENSE.
4. ALL WORK PERFORMED BETWEEN THE CONSTRUCTION/SILT FENCE AND TEMPORARY DEER EXCLUSION FENCE (IN-FILL AREA) SHALL BE PERFORMED WITH HAND TOOLS ONLY. NO HEAVY MACHINERY SHALL BE PERMITTED.
5. THE CONTRACTOR SHALL NOT DRIVE ANY VEHICLE OR STORE ANY MATERIALS WITHIN THE DRIPLINE OF ANY EXISTING TREE OR SHRUB TO BE RETAINED. FURTHERMORE, ALL SOFTSCAPE AREAS WITHIN THE WORK LIMITS SHALL BE PROTECTED FROM COMPACTION. CORRECTIVE DECOMPACTION MEASURES SHALL BE TAKEN IN THE CASE OF ANY COMPACTION AT THE DIRECTION OF THE ENGINEER AND AT THE CONTRACTOR'S EXPENSE. ANY DAMAGE TO EXISTING TREES OR VEGETATION SHALL BE REPLACED AT THE CONTRACTOR'S EXPENSE. TREE PROTECTION SHALL BE IN ACCORDANCE WITH SPECIFICATION 31 10 00 - CLEARING, GRUBBING, AND SITE PREPARATION AND TREE PROTECTION DETAIL ON DWG C-302.
8. THE CONTRACTOR SHALL EXCAVATE AS NEEDED AND PROVIDE TOPSOIL TO ACHIEVE FINISHED GRADES IN ALL AREAS TO BE SEEDED OR OTHERWISE PLANTED. TOPSOIL SHALL BE 6" MINIMUM IN SEEDED AREAS.
9. REFER TO DWG L-301 AND L-302 FOR SEEDING AND PLANTING SCHEDULE AND DETAILS.
10. UNLESS INDICATED ELSEWHERE, ALL AREAS DISTURBED BY CONSTRUCTION ACTIVITIES SHALL BE SEEDED WITH GRASS SEED FOR LAWN AREAS AS INDICATED IN SPECIFICATION 32 90 00 - FINAL GRADING AND LANDSCAPING.

SEEDING:

1. ALL SCHEDULE, SUBMITTALS, PRODUCTS AND METHODS FOR SEEDING OPERATIONS SHALL BE IN ACCORDANCE WITH SPECIFICATION 32 90 00 - FINAL GRADING AND LANDSCAPING AND LANDSCAPE SCHEDULE ON DWG L-301.
2. ALL SEED SHALL BE INTERAGENCY CERTIFIED UNDER THE AUSPICES OF A STATE SEED IMPROVEMENT COOPERATIVE AND SHALL BEAR THEIR SEALS OF CERTIFICATION ON EACH BAG. PERMANENT SEED SHALL BE 75% PURE LIVE SEED MINIMUM.
3. SEED BROUGHT TO THE PROJECT SITE SHALL BE IN UNOPENED BAGS SHOWING THE NET WEIGHT, COMPOSITION OF MIX, SUPPLIERS NAME AND GUARANTEE OF ANALYSIS. SEED SHALL BE STORED IN ORIGINAL UNOPENED PACKAGES, KEPT DRY, AND NOT OPENED UNTIL NEEDED FOR USE. DAMAGED OR FAULTY PACKAGES SHALL NOT BE USED AND WILL BE REJECTED. SEED SHALL BE FRESH, RECLEANED SEED OF THE LATEST CROP AND BE IN CONFORMANCE WITH THE PLANTING SPECIFICATION. ALL SEED MATERIALS SHALL BE PROTECTED FROM DRYING OUT AND FROM WIND DAMAGE DURING DELIVERY. SEED MIXES AND RATES AS INDICATED IN SPECIFICATION 32 90 00 - FINAL GRADING AND LANDSCAPING.
4. ALL WORK PERFORMED BETWEEN THE CONSTRUCTION/SILT FENCE AND TEMPORARY DEER EXLCUSION FENCE SHALL BE PERFORMED WITH HAND TOOLS ONLY. NO HEAVY MACHINERY SHALL BE PERMITTED.
5. SEED MIXTURE SHALL BE INSPECTED BY THE ENGINEER UPON ARRIVAL AT THE JOB SITE AND PRIOR TO INSTALLATION. ANY MATERIALS NOT IN COMPLIANCE WITH THE PLANTING SPECIFICATION WILL NOT BE ACCEPTED AND SHALL BE REMOVED FROM THE JOB SITE IMMEDIATELY.
6. SEEDBED PREPARATIONS AND SEEDING SHALL BE AS STATED IN THE SPECIFICATION 32 90 00 - FINAL GRADING AND LANDSCAPING.
7. DO NOT BROADCAST SEED BY MECHANICAL APPLICATION WHEN THE WIND VELOCITY IS SUCH TO PREVENT UNIFORM SEED DISTRIBUTION.
8. ALL SEEDED AREAS SHALL BE COVERED WITH ECS-1B SINGLE NET STRAW BIODEGRADABLE ROLLED EROSION CONTROL PRODUCT AS PER SPECIFICATION 32 90 00 - FINAL GRADING AND LANDSCAPING AND EROSION CONTROL MATTING DETAIL, DWG C-302.
9. SEEDED AREAS SHALL BE WATERED AT A MINIMUM OF ONCE PER WEEK UNTIL SEED HAS GERMINATED AND BECOME ESTABLISHED.
10. ACCEPTABLE SEEDING ESTABLISHMENT WILL BE 85% COVERAGE OF THE OPEN AREA WITH THE SEEDED SPECIES. ANY AREA NOT MEETING THIS REQUIREMENT SHALL BE RESEEDED WITH THE ORIGINAL SEED MIX.

PLANTING:

1. ALL PLANTINGS SHALL BE IN ACCORDANCE WITH THE PLANS AND SPECIFICATIONS. IN THE EVENT THE ACTUAL LIMITS OF SITE CLEARING AND STAGING AREAS DIFFER FROM THOSE SHOWN IN THE PLANS, THE CONTRACTOR SHALL SUBMIT SHOP DRAWINGS FOR PLANTINGS IN CONFORMANCE WITH THE SPECIFICATIONS, SHOP DRAWINGS FOR REVISED PLANTINGS SHALL BE SUBMITTED A MINIMUM OF 90 DAYS IN ADVANCE OF THE PLANTING SEASON WHEN PLANTING IS SCHEDULED TO OCCUR.
2. ALL PLANT MATERIAL TO BE VIGOROUS, FREE OF INJURY OR DEFECTS. ALL PLANT MATERIAL SHALL BE STOCK FROM AN APPROVED NURSERY AS PER THE SPECIFICATION.
3. ALL SEED MIXES AND PLANT SOURCES SHALL BE SUBMITTED IN ADVANCE FOR REVIEW AS NOTED IN SPECIFICATION 02910 PLANTING.
4. THE ENGINEER MAY REJECT ANY MATERIAL NOT IN CONFORMANCE WITH THE PLANTING SCHEDULES AND THE PLANTING SPECIFICATION REQUIREMENTS.
5. ALL PLANT MATERIAL SHALL BE INSTALLED DURING TIME FRAMES INDICATED IN THE CONTRACT SPECIFICATIONS.
6. IN-FILL PLANTING OUTSIDE OF THE LOD SHALL BE CONDUCTED IN THE FIRST PLANTING SEASON DURING CONSTRUCTION PERIOD.
7. PRIOR TO INSTALLATION, THE CONTRACTOR MUST STAKE OUT AND RECEIVE APPROVAL FROM THE ENGINEER FOR LOCATIONS OF ALL PLANTINGS.
9. FERTILIZER SHALL BE APPLIED IN ACCORDANCE WITH SPECIFICATION 02910 PLANTING. FERTILIZER DELIVERED TO THE SITE SHALL BE IN ORIGINAL, UNOPENED CONTAINERS BEARING THE MANUFACTURER'S CHEMICAL ANALYSIS AND ESSENTIAL INFORMATION. FERTILIZER CONTAINERS SHALL BE PROTECTED FROM EXPOSURE TO PRECIPITATION AND DIRECT SUNLIGHT.
10. PLANTS SHALL BE INSTALLED IN "DRY" CONDITIONS AND NOT WHEN PLANTING LOCATIONS ARE WET OR FROZEN. PRIOR TO INSTALLATION, CONTRACTOR SHALL STAKE OUT AND RECEIVE APPROVAL FROM ENGINEER FOR LOCATIONS OF PLANTINGS.
11. INSTALL MULCH ACROSS ENTIRE PLANTING BEDS INCLUDING ALL AREAS OF TREE, SHRUB, ORNAMENTAL GRASS AND HERBACEOUS PLUG PLANTING AS PER SPECIFICATION 32 90 00 - FINAL GRADING AND LANDSCAPING AND EACH ASSOCIATED PLANTING DETAIL ON DWG L-302. NO MULCH SHALL BE APPLIED TO SEEDED AREAS.
12. THE CONTRACTOR SHALL INSTALL TEMPORARY GOOSE EXCLUSION FENCE (SEE DETAIL DRAWING L-302) AROUND WETLAND PLANTINGS. AS GOOSE EXCLUSION WILL BE INSTALLED DURING PLANTING FOLLOWING BIRD DETERRENT SYSTEMS. THE PERIMETER FENCING SHALL BE PLACED AT THE FURTHEST EXTENT, INCLUSIVE OF THE BIRD DETERRENT SYSTEM BUT AT THE FULL EXTENT OF THE WETLAND PLANTINGS. IN AREAS WHERE THERE ARE BIRD DETERRENT WIRES, TWINE DOES NOT NEED TO BE USED. THERE SHALL BE NO OPENING GREATER THAT EIGHT FEET WITHIN THE WETLAND PLANTINGS THAT DOES NOT HAVE BIRD WIRE OR TWINE. TEMPORARY GOOSE EXCLUSION FENCING SHALL BE INSTALLED INTERNALLY IN ADDITION TO THE PERIMETER IN ALL AREAS THAT ARE NOT COVERED BY THE BIRD DETERRENT SYSTEM FOR STORMWATER SYSTEMS. TEMPORARY GOOSE EXCLUSION FENCE MUST BE INSTALLED WHILE PLANTING SUCH THAT ALL NEW PLANTINGS ARE PROTECTED BY GOOSE EXCLUSION ON THE SAME DAY. DO NOT INSTALL TEMPORARY GOOSE EXCLUSION FENCE OVER CHANNELS. TEMPORARY GOOSE EXCLUSION FENCE MUST BE INSPECTED AND REPAIRED AS OFTEN AS NECESSARY DURING THE LANDSCAPE GUARANTEE AND MONITORING PERIOD. TEMPORARY GOOSE EXCLUSION FENCE MUST BE REMOVED AT THE END OF THE NEW YORK STATE DEPARTMENT OF ENVIRONMENTAL CONSERVATION PERMIT MONITORING PERIOD. THE CONTRACTOR SHALL RECEIVE WRITTEN APPROVAL BY THE ENGINEER PRIOR TO REMOVING THE TEMPORARY GOOSE EXCLUSION FENCE.
13. THE CONTRACTOR SHALL INSTALL TEMPORARY DEER EXCLUSION FENCE (SEE DETAIL DRAWING L-302) PRIOR TO THE INSTALLATION OF ANY TREES OR SHRUBS, SUCH THAT ALL TREES AND SHRUBS SHALL BE PROTECTED THE SAME AS INSTALLATION. THE TEMPORARY DEER EXCLUSION FENCE POSTS SHALL NOT BE INSTALLED INTO ANY TREE ROOTS ONE (1) INCH AND LARGER. THE CONTRACTOR SHALL STAKE OUT AND RECEIVE APPROVAL FOR FINAL LOCATION OF THE FENCE LINE FROM THE ENGINEER PRIOR TO INSTALLATION. FLAGGING TAPE SHALL ONLY BE INSTALLED ON THE FENCE ON THE EAST AND SOUTH SIDES OF THE PROJECT SITE, FLAGGING SHALL NOT BE INSTALLED ON THE NORTH AND WEST SIDES (BORDERING PURCHASE STREET) OF THE PROJECT SITE. THE TEMPORARY DEER EXCLUSION FENCE SHALL BE MAINTAINED AND REPAIRED AS OFTEN AS NECESSARY DURING THE LANDSCAPE GUARANTEE. THE TEMPORARY DEER EXCLUSION FENCE MUST BE REMOVED AT THE END OF THE LANDSCAPE GUARANTEE WITH WRITTEN APPROVAL BY THE ENGINEER.
14. TEMPORARY DEER EXCLUSION FENCE TO TIE INTO CHAIN LINK FENCE AND AIRPORT FENCE DURING CONSTRUCTION, SEE CIVIL DWG C-111, AND SHALL BE SIX (6) INCHES FROM THE ACTUATED SWINGING ACCESS GATE STONE COLUMNS AFTER REMOVAL OF THE CHAIN LINK FENCE GATES.

LEGEND

- ZONE 1 - LAWN
- ZONE 2 - NATIVE GROUNDCOVER
- ZONE 3 - ENTRANCE
- ZONE 4 - FOUNDATION PART SUN
- ZONE 5 - FOUNDATION SHADE
- ZONE 6 - WOODLAND
- ZONE 7 - BIORETENTION HERBACEOUS
- ZONE 8 - BIORETENTION WOODY AND HERBACEOUS
- ZONE 9 - WETLAND DEEP WATER
- ZONE 10 - WETLAND SHALLOW WATER BENCH
- ZONE 11 - WETLAND SHORELINE FRINGE
- ZONE 12 - WETLAND RIPARIAN FRINGE

PLAN
SCALE: 1" = 30'

SCALE: 1" = 30'
30 15 0 30'

WARNING
IT IS A VIOLATION OF SECTION 7209.2 OF THE NEW YORK STATE EDUCATION LAW FOR ANY PERSON, UNLESS ACTING UNDER THE DIRECTION OF A LICENSED PROFESSIONAL ENGINEER, TO ALTER IN ANY WAY PLANS, SPECIFICATIONS, PLATS OR REPORTS TO WHICH THE SEAL OF A PROFESSIONAL ENGINEER HAS BEEN APPLIED. IF AN ITEM BEARING THE SEAL OF A PROFESSIONAL ENGINEER IS ALTERED, THE ALTERING ENGINEER SHALL AFFIX TO THE ITEM HIS SEAL AND THE NOTATION "ALTERED BY" FOLLOWED BY HIS SIGNATURE, THE DATE, AND A SPECIFIC DESCRIPTION OF THE ALTERATION.

REV	ISSUED FOR	DATE	BY

PROJECT ENGINEER:	R. FROST
DESIGNED BY:	E. MOSKALENKO
DRAWN BY:	E. MOSKALENKO
CHECKED BY:	M. SANTOWASSO

IF THIS BAR DOES NOT MEASURE 1" THEN DRAWING IS NOT TO FULL SCALE 0 1/2" 1"

BID SET

REGISTERED LANDSCAPE ARCHITECT ELIZABETH ANN MOSKALENKO 002548-1 STATE OF NEW YORK

Hazen
HAZEN AND SAWYER
498 SEVENTH AVENUE, 11th FLOOR
NEW YORK, NEW YORK 10018

WESTCHESTER JOINT WATER WORKS
MAMARONECK, NY

RYE LAKE WATER FILTRATION PLANT
HARRISON, NY

LANDSCAPE
LANDSCAPE PLAN - SHEET 2

DATE:	FEB 2025
HAZEN NO.:	90388-000
CONTRACT NO.:	A1364-A
DRAWING NUMBER:	L-102

File: C:\USERS\KCAMPOS\DOCUMENTS\ACCDOCS\HAZEN AND SAWYER\90388-000_RYE_LAKE_FILTRATION\PROJECT FILES\PROJECT\WISELAND\SCAPE\L-102.dwg Saved by KCAMPOS Save date: 2/21/2025 3:06 PM
PLOT DATE: 2/21/2025 3:32 PM BY: KCAMPOS

SEEDING SCHEDULE

ZONE 1 - Lawn Seed Mix **(24,150 SF)**

BOTANICAL NAME	COMMON NAME	PERCENTAGE
Festuca rubra	creeping red fescue	25
Lolium multiflorum	annual ryegrass	25
Lolium perenne , 'Blackstone'	perennial ryegrass, 'Blackstone'	25
Lolium perenee 'Confetti III'	Perennial ryegrass, Confetti III' turf type	25

Seed Lawn Mix at a rate of 150 lbs/acre.

ZONE 2 - Native Groundcover Seed Mix **(65,820 SF)**

BOTANICAL NAME	COMMON NAME	PERCENTAGE
Carex grisea	gray wood sedge	20
Carex pensylvanica	Pensylvania sedge	20
Sporobolus heterolepis	prairie dropseed	20
Achillea millefolium	common yarrow	5
Aquilegia canadensis	wild columbine	5
Asclepias tuberosa	butterfly milkweed	5
Conoclinium coelestinum	blue mistflower	5
Eurybia divarica	white wood aster	5
Solidago nemoralis	gray goldenrod	5
Symphyotrichum novi-belgii	New York aster	5

Seed Native Groundcover Mix at a rate of 15 lbs/acre and overseed with Cover Crop Seed Mix at a rate of 15 lbs/acre.

COVER CROP SEED MIX **(65,400 SF)**

BOTANICAL NAME	COMMON NAME
Avena sativa	oats

Seed Cover Crop at a rate of 15 lbs/acre.

ZONES 7, 8, 11, 12 - FACW SEED MIX **(34,400 SF)**

BOTANICAL NAME	COMMON NAME	PERCENTAGE
Asclepias incarnata	swamp milkweed	20
Euthamia graminifolia	grass-leaved goldenrod	20
Eupatorium maculatum	spotted Joe-Pye-weed	20
Eupatorium perfoliatum	boneset	20
Lobelia cardinalis	cardinal flower	20

Seed FACW Seed Mix at a rate of 10 lbs/acre.

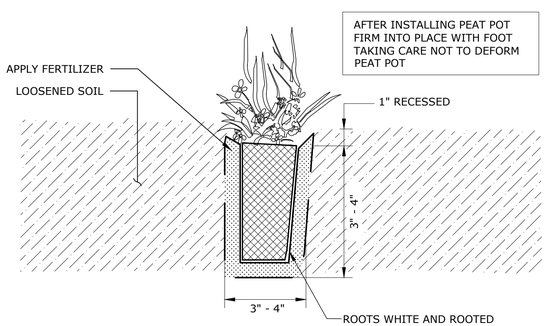

NOTES:

1. ALL PLASTIC WRAP SHALL BE REMOVED PRIOR TO PLANTING.

TYPICAL PLUG PLANTING DETAIL

NOT TO SCALE

PLANTING SCHEDULE

ZONES 3, 4, 5, & 6

	Quantity	Code	Scientific Name	Common Name	Size	Form	Spacing	Comments
Trees								
	13	AA	*Amelanchier arborea*	downy serviceberry	#7	cont.	as shown	
	14	CP	*Carpinus caroliniana*	American hornbeam	#10	cont.	as shown	
	26	CC	*Cercis canadensis*	eastern redbud	#20	cont.	as shown	acceptable cultivars: 'Ace of Hearts', 'Forest Pansy', 'Ruby Falls'
	18	CFA	*Cornus florida* 'Appalachian Spring'	Appalachian Spring flowering dogwood	#10	cont.	as shown	
	13	IO	*Ilex opaca*	American holly	#15	cont.	as shown	
	19	IOJ	*Ilex opaca* 'Jersey Princess'	Jersey Princess american holly	#65	cont.	as shown	
	44	JV	*Juniperus virginiana*	eastern red cedar	#15	cont.	as shown	
	69	JVC	*Juniperus virginiana* 'Emerald Sentinel'	Emerald Sentinel™ red cedar	#65	cont.	as shown	
	5	LS	*Liquidambar styraciflua*	American sweetgum	1.5" cal	B&B	as shown	
	9	MV	*Magnolia virginiana 'Henry Hicks'*	Henry Hicks southern magnolia	3.5" cal	B&B	as shown	
	33	PS	*Pinus strobus*	eastern white pine	#25	cont.	as shown	
	22	QA	*Quercus alba*	white oak	1.5" cal	B&B	as shown	
Shrubs								
	265	AB	*Aronia arbutifolia*	red chokeberry	72 cell	tubeling	2' O.C.	naturalistic clusters of 3 to 5
	20	HV	*Hamamelis virginiana* 'Mohonk Red'	Mohonk red witchhazel	#5	cont.	as shown	
	12	RC	*Rhododendron catawbiense* 'Roseum Elegans'	English Roseum catawba rhododendron	#7	cont.	as shown	
	14	RP	*Rhododendron* 'P.J.M. Elite'	Elite rhododendron	#5	cont.	4' O.C.	
	265	VA	*Vaccinium angustifolium*	lowbush blueberry	72 cell	tubeling	2' O.C.	naturalistic clusters of 3 to 5
Herbaceous / Grasses								
	465	CW	Carex woodii	wood sedge	2"	plug	1' O.C.	naturalistic clusters of 3 to 5
	480	TW	Tiarella wherryi	wherry's foam flower	2"	plug	1.5' O.C.	naturalistic clusters of 3 to 5
	850	AC	Anemone canadensis	windflower	2"	plug	1.5' O.C.	naturalistic clusters of 3 to 5
	300	EM	Eurybia macrophyllus 'Twilight'	twilight big leaf aster	2"	plug	1.5' O.C.	naturalistic clusters of 3 to 5
	465	PA	Polystichum acrostichoides	christmas fern	32 cell	tubeling	1' O.C.	naturalistic clusters of 3 to 5
	255	SL	Symphyotrichum laeve	smooth blue aster	2"	plug	1.5' O.C.	naturalistic clusters of 3 to 5
	695	LS	Lobelia siphilitica	great blue lobelia	2"	plug	1' O.C.	naturalistic clusters of 3 to 5
	300	SH	Sporobolus heterolepis	prairie dropseed	#1	cont.	1.5' O.C.	naturalistic clusters of 3 to 5
	245	SS	Schizachyrium scoparium 'Carousel'	Carousel little bluestem	#1	cont.	1.5' O.C.	naturalistic clusters of 3 to 5
	690	AG	Aquilegia canadensis	eastern red columbine	2"	plug	1' O.C.	naturalistic clusters of 3 to 5
	245	EP	Echinacea purpurea	eastern purple coneflower	2"	plug	1' O.C.	naturalistic clusters of 3 to 5
	185	AT	Asclepias tuberosa	butteryfly weed	2"	plug	1' O.C.	naturalistic clusters of 3 to 5

ZONES 7 & 8 - BIORETENTION

	No.	Sym	Scientific Name	Common Name	Size	Form	Spacing	Comments
Shrubs								
	145	CAH	*Clethra alnifolia* 'Hummingbird'	Hummingbird sweet pepperbush	#1	cont.	3' O.C.	Cluster of 3,5,7
	150	AAB	*Aronia arbutifolia* 'Brillantissima'	Brilliantissima red chokeberry	#1	cont.	3' O.C.	Cluster of 3,5,7
	145	STA	*Spirea tomentosa*	steeplebush	#1	cont.	3' O.C.	Cluster of 3,5,7
	145	CSK	*Cornus sericea* 'Kelseyi'	Kelsey red-twig dogwood	#1	cont.	3' O.C.	Cluster of 3,5,7
	140	IVH	*Itea virginica* 'Henry's Garnet'	Henry's Garnet sweetspire	#1	cont.	3' O.C.	Cluster of 3,5,7
Herbaceous								
	865	ACA	*Acorus calamus*	sweet flag	2"	plug	2' O.C.	Groups of 5,7,9 in alternating rows
	865	AIP	*Asclepias incarnata*	swamp milkweed	2"	plug	2' O.C.	Groups of 5,7,9 in alternating rows
	860	EUP	*Eupatorium purpureum*	Joe-Pye Weed	2"	plug	2' O.C.	Groups of 5,7,9 in alternating rows
	860	EGP	*Euthamia graminifolia*	grass-leaved goldenrod	2"	plug	2' O.C.	Groups of 5,7,9 in alternating rows
	860	LCP	*Lobelia cardinalis*	cardinal flower	2"	plug	2' O.C.	Groups of 5,7,9 in alternating rows
	860	IVP	*Iris versicolor*	blue flag	2"	plug	2' O.C.	Groups of 5,7,9 in alternating rows

Wetland

	Quantity	Code	Scientific Name		Size	Form	Spacing	Comments
Zone 9 -Wetland Deep Water (Area A: 700 SF + Area B: 340 SF + Area C: 310 SF = 1,350 SF)								
	380	PNP	*Potamogeton nodusus*	long-leaved pond weed	2"	plug	2' O.C.	Groups of 5,7,9 in alternating rows
	380	PAP	*Polygonum amphibium*	water smartweed	2"	plug	2' O.C.	Groups of 5,7,9 in alternating rows
Zone 10 - Wetland Shallow Water Bench (Area A: 3,120 SF + Area B 1,070 SF + 650 SF = 4,840 SF)								
	710	ACA	*Acorus calamus*	sweet flag	2"	plug	2' O.C.	Groups of 5,7,9 in alternating rows
	710	IVP	*Iris versicolor*	blue flag	2"	plug	2' O.C.	Groups of 5,7,9 in alternating rows
Zone 11 - Wetland Shoreline Fringe (Area: 6,850 SF)								
Herbaceous								
	530	SCP	*Saururus cernuus*	lizard's tail	2"	plug	2' O.C.	Groups of 5,7,9 in alternating rows
	525	AIP	*Asclepias incarnata*	swamp milkweed	2"	plug	2' O.C.	Groups of 5,7,9 in alternating rows
	525	EUP	*Eupatorium purpureum*	Joe-Pye Weed	2"	plug	2' O.C.	Groups of 5,7,9 in alternating rows
Shrubs								
	100	STA	*Spirea tomentosa*	steeplebush	#1	cont	4' O.C.	Cluster of 3,5,7

Overseed at a rate of 10 lbs/acre with FACW Seed Mix.

Zone 12 - Wetland Riparian Fringe (4,000 SF)

Herbaceous								
	310	EGP	*Euthamia graminifolia*	grass-leaved goldenrod	2"	plug	2' O.C.	Groups of 5,7,9 in alternating rows
	310	AIP	*Asclepias incarnata*	swamp milkweed	2"	plug	2' O.C.	Groups of 5,7,9 in alternating rows
	300	LCP	*Lobelia cardinalis*	cardinal flower	2"	plug	2' O.C.	Groups of 5,7,9 in alternating rows
Shrubs								
	30	AAP	*Aronia arbutifolia*	red chokeberry	72 cell	tubeling	4' O.C.	Cluster of 3,5,7
	30	IVP	*Itea virginica*	virginia sweetspire	72 cell	tubeling	4' O.C.	Cluster of 3,5,7

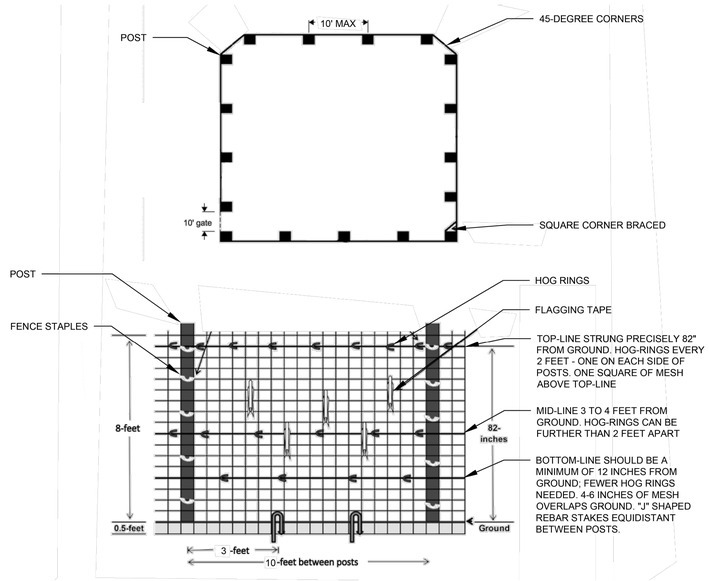

INSTALLATION NOTES:

1. INSTALL 10-FOOT LONG 4" X 4" WOODEN POSTS AT LEAST 2 FEET DEEP WITH AT LEAST 8 FEET OF POST ABOVE GROUND. POSTS SHOULD BE SPACED NO FURTHER THAN 10 FEET APART.
2. INSTALL 45-DEGREE ANGLE POSTS AT THE CORNERS WHEN POSSIBLE RATHER THAN SQUARE TO INCREASE STRENGTH. SPACE POSTS FOR GATE(S) AND LEAVE SPACE BETWEEN FENCE AND TREES AS NECESSARY FOR EQUIPMENT ACCESS AND MAINTENANCE.
3. STRING THREE SECTIONS OF NO. 14 GAUGE WIRE - TOP, MIDDLE, AND BOTTOM TO SUPPORT AND REINFORCE THE WIRE MESH FENCING. START WITH THE TOP LINE AND SECURE TO POSTS WITH U-SHAPED FENCE STAPLES. ONCE ALL THREE LINES ARE ATTACHED, TENSION THE LINES USING GRIPPLES OR OTHER LOCKING DEVICES.
4. ATTACH NO. 14 GAUGE METAL MESH WITH 4" X 6" OPENINGS TO POSTS WITH U-SHAPED FENCING STAPLES AND PULL TAUT BETWEEN EACH POST.
5. CRIMP HOG RINGS TO THE TOP LINE EVERY 2 FEET BETWEEN POSTS AND AS CLOSE AS POSSIBLE TO EACH SIDE OF THE POSTS. PLACE HOG RINGS EVERY 3 TO 4 FEET ON THE MIDDLE AND BOTTOM LINES.
6. AFTER MESH IS SECURED TO WIRE, STAKE MESH TO THE GROUND WITH INVERTED J-SHAPED, 12-INCH LONG REBAR OR SIMILAR STAKES. USE TWO STAKES BETWEEN POSTS.
7. ONCE FENCE CONSTRUCTION IS COMPLETE, HANG ORANGE CLOTH FLAGGING TAPE STREAMERS AROUND ENTIRE FENCE TO ALERT DEER AND OTHER WILDLIFE TO THE OBSTRUCTION. ATTACH FLAGGING IN AN UP-AND-DOWN ZIGZAG PATTERN BOTH INSIDE AND OUTSIDE OF THE FENCE.
8. INSPECT ROUTINELY AND TIGHTEN AND REPAIR AS NEEDED.

TEMPORARY DEER EXCLUSION FENCE

NOT TO SCALE

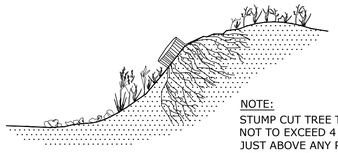

NOTE:
STUMP CUT TREE TO A HEIGHT NOT TO EXCEED 4 INCHES OR JUST ABOVE ANY PRONOUNCED ROOT FLARES

FLUSH CUT

NOT TO SCALE

WARNING
IT IS A VIOLATION OF SECTION 7209.2 OF THE NEW YORK STATE EDUCATION LAW FOR ANY PERSON, UNLESS ACTING UNDER THE DIRECTION OF A LICENSED PROFESSIONAL ENGINEER, TO ALTER IN ANY WAY PLANS, SPECIFICATIONS, PLATS OR REPORTS TO WHICH THE SEAL OF A PROFESSIONAL ENGINEER HAS BEEN APPLIED. IF AN ITEM BEARING THE SEAL OF A PROFESSIONAL ENGINEER IS ALTERED, THE ALTERING ENGINEER SHALL AFFIX TO THE ITEM HIS SEAL AND THE NOTATION "ALTERED BY" FOLLOWED BY HIS SIGNATURE, THE DATE, AND A SPECIFIC DESCRIPTION OF THE ALTERATION.

REV	ISSUED FOR	DATE	BY

PROJECT ENGINEER: R. FROST
DESIGNED BY: E. MOSKALENKO
DRAWN BY: E. MOSKALENKO
CHECKED BY: M. SANTOWASSO

IF THIS BAR DOES NOT MEASURE 1" THEN DRAWING IS NOT TO FULL SCALE 0 1/2" 1"

BID SET

REGISTERED LANDSCAPE ARCHITECT ELIZABETH ANN MOSKALENKO 002548-1 STATE OF NEW YORK

Hazen

HAZEN AND SAWYER
498 SEVENTH AVENUE, 11th FLOOR
NEW YORK, NEW YORK 10018

WESTCHESTER JOINT WATER WORKS
MAMARONECK, NY

RYE LAKE WATER FILTRATION PLANT
HARRISON, NY

LANDSCAPE
LANDSCAPE SCHEDULE

DATE: FEB 2025
HAZEN NO.: 90388-000
CONTRACT NO.: A1364-A
DRAWING NUMBER: L-301

File: C:\USERS\KCAMPOS\DOCACCDOCS\HAZEN AND SAWYER\90388-000_RYE_LAKE_FILTRATION\PROJECT FILES\PROJECTWISE\LANDSCAPE\L-301 Saved by KCAMPOS Save date: 2/7/2025 6:36 PM
PLOT DATE: 2/7/2025 6:39 PM BY: KCAMPOS

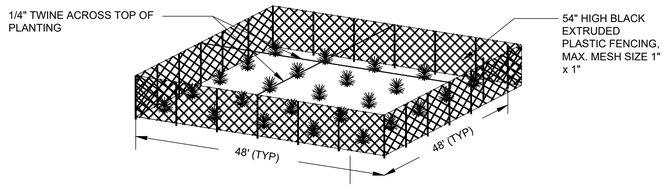

GOOSE EXCLUSION FENCE - 3D
(SECTIONS NO LARGER THAN 2,310 S.F.)

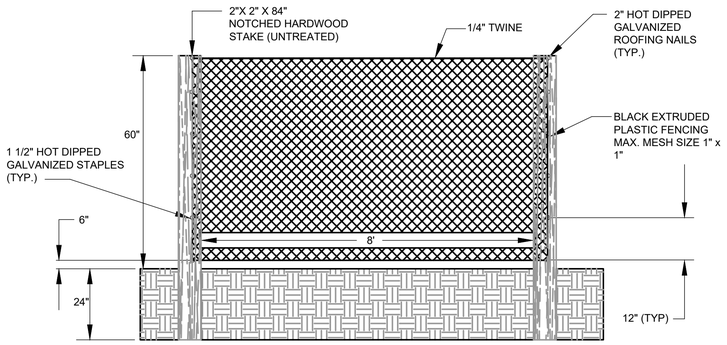

PERIMETER GOOSE EXCLUSION FENCE - SECTION VIEW

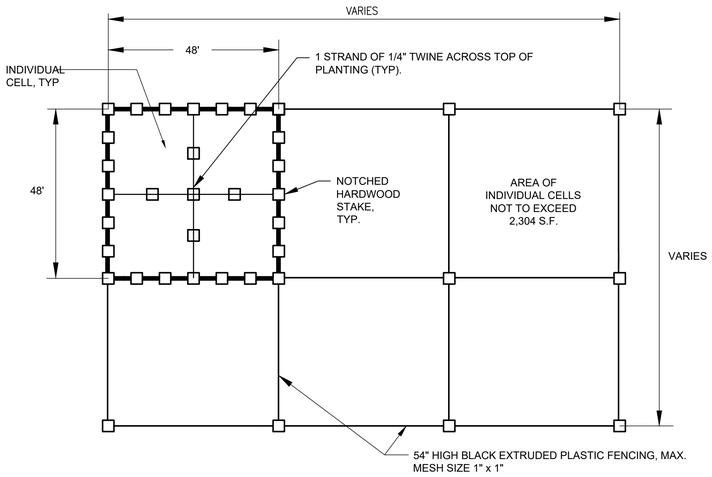

PERIMETER GOOSE EXCLUSION FENCE - PLAN VIEW

TEMPORARY GOOSE EXCLUSION FENCE DETAIL

NOT TO SCALE

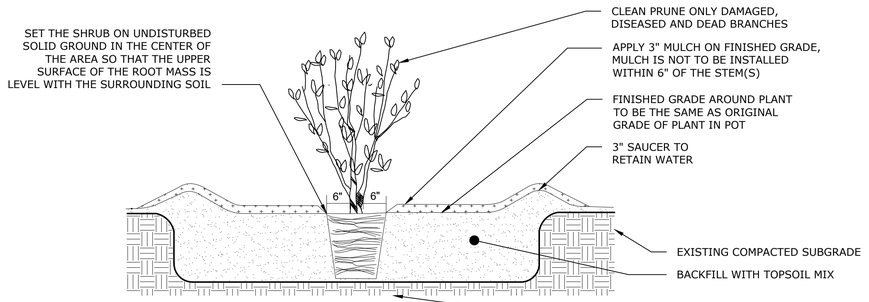

NOTES:

1. PRUNING, IF NECESSARY, SHALL BE DONE BY A CERTIFIED ARBORIST.
2. NOTIFY ENGINEER IF IMPERVIOUS OR UNACCEPTABLE NATIVE SOIL TO BE REMOVED IS ENCOUNTERED IN SHRUB PLANTING LOCATIONS.
3. ROTOTILL/CULTIVATE SOILS TO A DEPTH EQUAL TO THE DEPTH OF ROOT BALL AND TWO TIMES THE DIAMETER OF THE ROOT BALL.
2. APPLY FERTILIZER AND MYCORRHIZAL INOCULANT PER PLANTING SPECIFICATION. TAMP SOIL IN 6" LAYERS AROUND ROOT BALL AND WATER THOROUGHLY AFTER PLANTING. WATER THOROUGHLY AFTER EXCAVATION AND AFTER PLANT INSTALLATION.
3. CONTAINER: REMOVE ROOT BALL FROM CONTAINER. LOOSEN POT- BOUND, SPIRALLY-GROWING AND GIRDLING ROOTS. B&B: CAREFULLY REMOVE TOP 1/3 OF BURLAP. CUT SEVERAL SLITS IN BURLAP TO FACILITATE ROOT PENETRATION
4. REMOVE AND DISPOSE OF ALL NON-BIODEGRADABLES FROM PLANTING HOLES AND ROOT BALL.

TYPICAL SHRUB PLANTING DETAIL

NOT TO SCALE

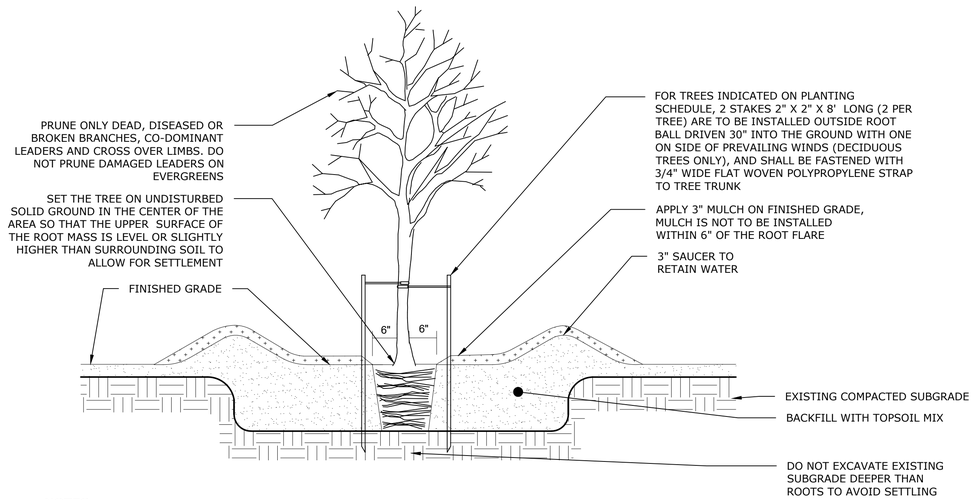

NOTES:

1. PRUNING, IF NECESSARY, SHALL BE DONE BY A CERTIFIED ARBORIST.
2. NOTIFY ENGINEER IF IMPERVIOUS OR UNACCEPTABLE NATIVE SOIL TO BE REMOVED IS ENCOUNTERED IN TREE PIT LOCATIONS.
3. ROTOTILL/CULTIVATE SOILS TO A DEPTH EQUAL TO THE DEPTH OF ROOT BALL AND TWO TIMES THE DIAMETER OF THE ROOT BALL.
4. APPLY FERTILIZER AND MYCORRHIZAL INOCULANT PER PLANTING SPECIFICATION. TAMP SOIL IN 6" LAYERS AROUND ROOT BALL AND WATER THOROUGHLY AFTER PLANTING. WATER THOROUGHLY AFTER EXCAVATION AND AFTER PLANT INSTALLATION.
5. COMPLETELY UNWRAP OR CUT GIRDLING ROOTS. DO NOT DAMAGE MAIN ROOTS OR ROOT BALL WHEN INSTALLING TREE.
6. FOR CONTAINER: REMOVE ROOT BALL FROM CONTAINER. LOOSEN POT- BOUND, SPIRALLY-GROWING ROOTS. FOR B&B: CUT TWINE AND REMOVE BURLAP AND UPPER THIRD OF WIRE BASKET TO A MINIMUM DEPTH OF 18".
7. REMOVE AND DISPOSE OF ALL NON-BIODEGRADABLES FROM PLANTING HOLES AND ROOT BALL.
8. REMOVE STAKES AFTER FIRST YEAR.

TYPICAL TREE PLANTING DETAIL

NOT TO SCALE

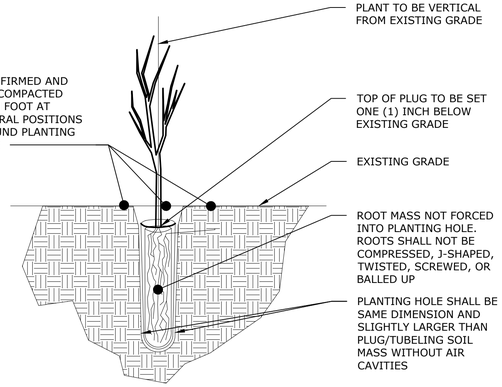

NOTES:

1. LOCATE THE CYLINDRICAL DIBBLE OR PLUG EXTRACTOR IN THE CENTER OF THE PLANTING SPOT, ORIENT THE TOOL VERTICALLY (STRAIGHT DOWN), AND APPLY FIRM PRESSURE ON THE FOOTSTEP SO THAT THE PLANTING TOOL PENETRATES TO THE FULL DESIGN DEPTH. THE CREATED HOLE SHALL BE WITHIN 10 DEGREES OR VERTICAL.
2. REMOVE THE PLANTING TOOL AND EXAMINE THE PLANTING HOLE. THE CREATED HOLE SHALL BE CLEAN AND CONFORM TO THE SHAPE OF THE PLUG/TUBELING DIMENSIONS. IF IT DOES NOT CONFORM TO THE REQUIRED SHAPE, INSERT THE TOOL AGAIN TO CREATE THE CORRECT DIMENSIONS. IF DIMENSION ARE STILL NOT CORRECT OR A LARGE AIR POCKET IS CREATED, THE HOLE SHALL BE ABANDONED AND A NEW PLANTING LOCATION SELECTED.
3. ONCE THE CORRECT PLANTING HOLE SIZE IS ACHIEVED, GENTLY REMOVE THE TUBELING FROM THE PLANT TRAY, PLANT CARRIER OR SHIPPING CONTAINER AND CAREFULLY REMOVE THE TREE/SHRUB FROM THE PLANT TUBE. ALTERNATELY, CAREFULLY REMOVE A PLUG FROM THE PLANTING BAG OR PLANT CARRIER.
4. APPLY FERTILIER PER PLANTING SPECIFICATION TO THE HOLE. IMMEDIATELY PLACE THE TREE/SHRUB IN THE PLANTING HOLE. THE TREES/SHRUB SHALL BE PLACED IN THE PLANTING HOLE SUCH THAT THE TOP OF THE TUBELING ROOT COLLAR OR PLUG ROOTMASS IS ONE (1) INCH BELOW THE ADJACENT SOIL ELEVATION WITH THE ROOTS ORIENTED DOWNWARD. DO NOT FORCE INTO THE PLANTING HOLE. THE ROOT SYSTEM SHALL NOT BE COMPRESSED, TWISTED, SCREWED, J-SHAPED OR BALLED UP.
5. WITH THE FOOT, SCRAPE ENOUGH SOIL FROM THE SURROUNDING AREA TO CLOSE THE PLANTING HOLE AND FULLY COVER THE PLANTING SURFACE OF THE TUBELING/PLUG TO AN ELEVATION SLIGHTLY HIGHER THAN THE ADJACENT GRADE.
6. WHILE GENTLY HOLDING THE TOP OF THE TREE/SHRUB APPLY FIRM FOOT PRESSURE IN SEVERAL DIFFERENT POSITIONS IMMEDIATELY AROUND THE TREE/SHRUB TO FIRM THE SOIL AND ELIMINATE AIR POCKETS. THE FINAL PLACEMENT SHALL RESULT IN THE TOP OF THE ROOT MASS BEING ONE (1) INCH BELOW THE SOIL SURFACE WITH THE PLANTING HOLE BEING TOTALLY CLOSED WITH FIRMED, UNCOMPACTED SOIL WITHOUT ANY AIR POCKETS.

TUBELING PLANTING DETAIL

NOT TO SCALE

WARNING
IT IS A VIOLATION OF SECTION 7209.2 OF THE NEW YORK STATE EDUCATION LAW FOR ANY PERSON, UNLESS ACTING UNDER THE DIRECTION OF A LICENSED PROFESSIONAL ENGINEER, TO ALTER IN ANY WAY PLANS, SPECIFICATIONS, PLATS OR REPORTS TO WHICH THE SEAL OF A PROFESSIONAL ENGINEER HAS BEEN APPLIED. IF AN ITEM BEARING THE SEAL OF A PROFESSIONAL ENGINEER IS ALTERED, THE ALTERING ENGINEER SHALL AFFIX TO THE ITEM HIS SEAL AND THE NOTATION "ALTERED BY" FOLLOWED BY HIS SIGNATURE, THE DATE, AND A SPECIFIC DESCRIPTION OF THE ALTERATION.

REV	ISSUED FOR	DATE	BY

PROJECT ENGINEER:	R. FROST
DESIGNED BY:	E. MOSKALENKO
DRAWN BY:	E. MOSKALENKO
CHECKED BY:	M. SANTOWASSO

IF THIS BAR DOES NOT MEASURE 1" THEN DRAWING IS NOT TO FULL SCALE (0 — 1/2" — 1")

BID SET

REGISTERED LANDSCAPE ARCHITECT · ELIZABETH ANN MOSKALENKO · 002548-1 · STATE OF NEW YORK

Hazen
HAZEN AND SAWYER
498 SEVENTH AVENUE, 11th FLOOR
NEW YORK, NEW YORK 10018

WESTCHESTER JOINT WATER WORKS
MAMARONECK, NY

RYE LAKE WATER FILTRATION PLANT
HARRISON, NY

LANDSCAPE
LANDSCAPE DETAILS

DATE:	FEB 2025
HAZEN NO.:	90388-000
CONTRACT NO.:	A1364-A
DRAWING NUMBER:	L-302

File: C:\USERS\KCAMPOS\DOCACCDOCS\HAZEN AND SAWYER\90388-000_RYE_LAKE_FILTRATION\PROJECT FILES\PROJECTWISE\LANDSCAPE\L-302 Saved by KCAMPOS Save date: 2/7/2025 4:54 PM
PLOT DATE: 2/7/2025 5:27 PM BY: KCAMPOS

GENERAL NOTES

1. ALL CONSTRUCTION SHALL BE IN ACCORDANCE WITH THE RULES AND REGULATIONS OF 2020 BUILDING CODE OF NEW YORK STATE AND TOWN/VILLAGE OF HARRISON, NY.

2. WRITTEN DIMENSIONS ON THESE DRAWINGS SHALL HAVE PRECEDENCE OVER SCALED DIMENSIONS.

3. CONTRACTOR SHALL VERIFY AND BE RESPONSIBLE FOR ALL DIMENSIONS AND CONDITIONS ON THE JOB AND ENGINEERS OFFICE MUST BE NOTIFIED OF ANY VARIATION FROM THE DIMENSIONS SHOWN BY THESE DRAWINGS.

4. CONTRACTOR SHALL BE RESPONSIBLE FOR ADEQUATELY BRACING AND PROTECTING ALL WORK DURING CONSTRUCTION AGAINST DAMAGE, BREAKAGE, COLLAPSE, DISTORTIONS AND OFF-ALIGNMENT ACCORDING TO APPLICABLE CODES, STANDARDS AND GOOD PRACTICE.

5. CONSTRUCTION SHALL COMPLY WITH ALL FEDERAL, STATE AND LOCAL CODES, ORDINANCES, RULES AND REGULATIONS PERTAINING TO LABOR AND MATERIALS.

6. ALL NOTES HEREIN MENTIONED WITH THOSE ON THE VARIOUS DRAWINGS, SHALL APPLY TO ALL DRAWINGS.

7. ALL EXITS SHALL BE KEPT READILY ACCESSIBLE AND UNOBSTRUCTED AT ALL TIMES.

8. THE CONTRACTOR SHALL BE RESPONSIBLE FOR MAINTAINING THE INTEGRITY OF RATED PARTITIONS AND STRUCTURES PARTICULARLY WHERE PENETRATED BY VARIOUS TRADES.

DOOR CLEARANCES

FOR ACCESSIBLY (PER ANSI A1117.1)

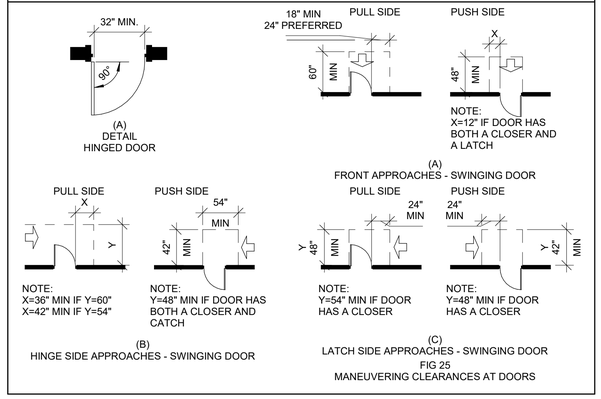

(A) DETAIL HINGED DOOR

(A) FRONT APPROACHES - SWINGING DOOR

(B) HINGE SIDE APPROACHES - SWINGING DOOR

(C) LATCH SIDE APPROACHES - SWINGING DOOR

FIG 25
MANEUVERING CLEARANCES AT DOORS

DEVICE LEGEND

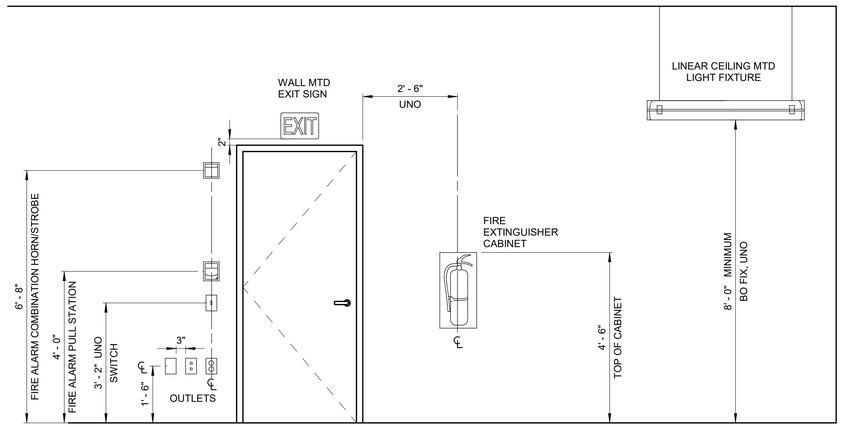

WARNING
IT IS A VIOLATION OF SECTION 7209.2 OF THE NEW YORK STATE EDUCATION LAW FOR ANY PERSON, UNLESS ACTING UNDER THE DIRECTION OF A LICENSED PROFESSIONAL ENGINEER, TO ALTER IN ANY WAY PLANS, SPECIFICATIONS, PLATS OR REPORTS TO WHICH THE SEAL OF A PROFESSIONAL ENGINEER HAS BEEN APPLIED. IF AN ITEM BEARING THE SEAL OF A PROFESSIONAL ENGINEER IS ALTERED, THE ALTERING ENGINEER SHALL AFFIX TO THE ITEM HIS SEAL AND THE NOTATION "ALTERED BY" FOLLOWED BY HIS SIGNATURE, THE DATE, AND A SPECIFIC DESCRIPTION OF THE ALTERATION.

ABBREVIATIONS

ACOUS	ACOUSTICAL
ADMIN	ADMINISTRATION
AFF	ABOVE FINISH FLOOR
AL	ALUMINUM
&	AND
A	ARCHITECTURAL
@	AT
B&B	BALLED & BURLAPPED
BSMT	BASEMENT
BM	BEAM
BLK	BLOCK
BD	BOARD
BOT	BOTTOM
BO	BOTTOM OF
BC	BRICK COURSES
BLDG	BUILDING
CAB	CABINET
CIP	CAST IN PLACE
CLG	CEILING
C/S	CIVIL SANITARY
CLO	CLOSET
CMU	CONCRETE MASONRY UNIT
CONC	CONCRETE
CB	CONCRETE BLOCK
CONT	CONTINUOUS
CJ	CONTROL JOINT
CNT	CONTROL
CO	CLEANOUT
COORD	COORDINATE
CTSK	COUNTERSINK
CU	CUBIC
CL	CLEAR
DTL	DETAIL
DIA	DIAMETER
DIM	DIMENSION
DR	DOOR
DN	DOWN
DS	DOWNSPOUT
DOW	DOWEL
DWG	DRAWING
DF	DRINKING FOUNTAIN
EA	EACH
E	EAST
EWC	ELECTRIC WATER COOLER
ELEC	ELECTRICAL
ELEV	ELEVATOR
EL	ELEVATION
ENGR	ENGINEER
EQ	EQUAL
EQUIP	EQUIPMENT
ERD	EXISTING ROOF DRAIN
EXST	EXISTING
EXP	EXPANSION
EJ	EXPANSION JOINT
EXT	EXTERIOR
FD	FLOOR DRAIN
FFE	FINISH FLOOR ELEVATION
FRP	FIBER REINFORCED PLASTIC
FWP	FIBROUS WOOD PANEL
FIN	FINISH
FIN FL	FINISH FLOOR
FIX	FIXTURE
FE	FIRE EXTINGUISHER
FL	FLOOR
GA	GAUGE
GALV	GALVANIZED
GC	GENERAL CONTRACTOR
GL	GLASS
GFB	GROUND FACE BLOCK
GR	GRADE
GYP	GYPSUM
HC	HANDICAPPED
HDN	HARDENER
HDW	HARDWARE
HT	HEIGHT
HPT	HIGH POINT
HM	HOLLOW METAL
HORIZ	HORIZONTAL
HR	HOUR
HVAC	HEATING, VENTILATION & AIR CONDITIONING
ID	INSIDE DIMENSION
IG	INSULATING GLASS
INFO	INFORMATION
INSUL	INSULATION
INT	INTERIOR
JC	JANITOR'S CLOSET
JT	JOINT
LAB	LABORATORY
LAV	LAVATORY
LDR	LEADER
LB	POUND
LIN FT	LINEAR FEET
LPT	LOW POINT
LSG	LAMINATED SAFETY GLASS
MO	MASONRY OPENING
MAT'L	MATERIAL
MAX	MAXIMUM
MAINT	MAINTENANCE
MFR	MANUFACTURER
MIN	MINIMUM
N	NORTH
OC	ON CENTER
OD	OUTSIDE DIAMETER
OL	OCCUPANT LOAD
PART	PARTITION
PCMU	PREFACED ARCHITECTURAL CONCRETE MASONRY UNIT
PCP	PORTLAND CEMENT PLASTER
PCG	POLYCARBONATE GLASS
PJ	PREMOLDED JOINT
PL	PLATE
PLUMB	PLUMBING
PNL	PANEL
PREP	PREPARATION/ PREPARE
PSF	POUNDS PER SQUARE FOOT
PTD	PAINTED
PVC	POLYVINYL CHLORIDE
PVF	POLYVINYL FLUORIDE
QUAN	QUANTITY
R	RISER
RAD	RADIUS
RCP	REFLECTED CEILING PLAN
REF	REFERENCE
REINF	REINFORCING
REQ'D	REQUIRED
RD	ROOF DRAIN
RM	ROOM
RO	ROUGH OPENING
S	SOUTH
SECT	SECTION
SQFT	SQUARE FEET
STRUCT	STRUCTURAL
SHT	SHEET
SMS	SHEET METAL SCREWS
SLJ	SIDING LAP JOINT
SIM	SIMILAR
SPECS	SPECIFICATIONS
SQ	SQUARE
SST	STAINLESS STEEL
STA	STATION
STD	STANDARD
STL	STEEL
STOR	STORAGE
T	TREAD
THK	THICKNESS
TO	TOP OF
TOM	TOP OF MASONRY
TOS	TOP OF SLAB
TRM	TRANSITION MEMBRANE
TSM	TRANSOM
TWS	TRANSLUCENT WALL SYSTEM
TYP	TYPICAL
UL	UNDERWRITER'S LABORATORIES
UNO	UNLESS NOTED OTHERWISE
UV	ULTRAVIOLET
VAR	VARIES
VERT	VERTICAL
VIF	VERIFY IN FIELD
VP	VISION PANEL
W	WEST
WC	WATER CLOSET
WD	WOOD
WT	WEIGHT
W/O	WITHOUT

SYMBOLS AND LEGEND

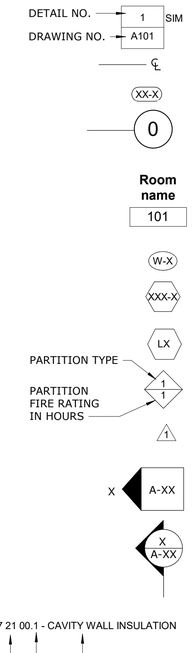

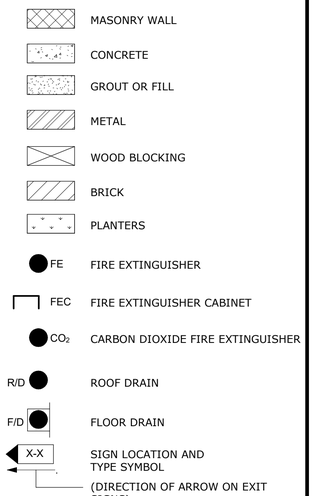

REV	ISSUED FOR	DATE	BY

PROJECT ENGINEER:	R. FROST
DESIGNED BY:	J. WOJCIESKI
DRAWN BY:	J.MARTINEZ
CHECKED BY:	M. STALLONE

IF THIS BAR DOES NOT MEASURE 1" THEN DRAWING IS NOT TO FULL SCALE 0 1/2" 1"

BID SET

REGISTERED ARCHITECT JENNIFER WOJCIESKI 034146 STATE OF NEW YORK

Hazen

HAZEN AND SAWYER
498 SEVENTH AVENUE, 11th FLOOR
NEW YORK, NEW YORK 10018

WESTCHESTER JOINT WATER WORKS
MAMARONECK, NY

RYE LAKE WATER FILTRATION PLANT
HARRISON, NY

FILTRATION PLANT
ARCHITECTURAL
STANDARD NOTES, SYMBOLS AND ABBREVIATIONS

DATE:	FEB 2025
HAZEN NO.:	90388-000
CONTRACT NO.:	A1364-A
DRAWING NUMBER:	A-001

Autodesk Docs://90388-000_Rye_Lake_Filtration/90388-000-WFP-A.rvt
2/19/2025 4:34:16 PM

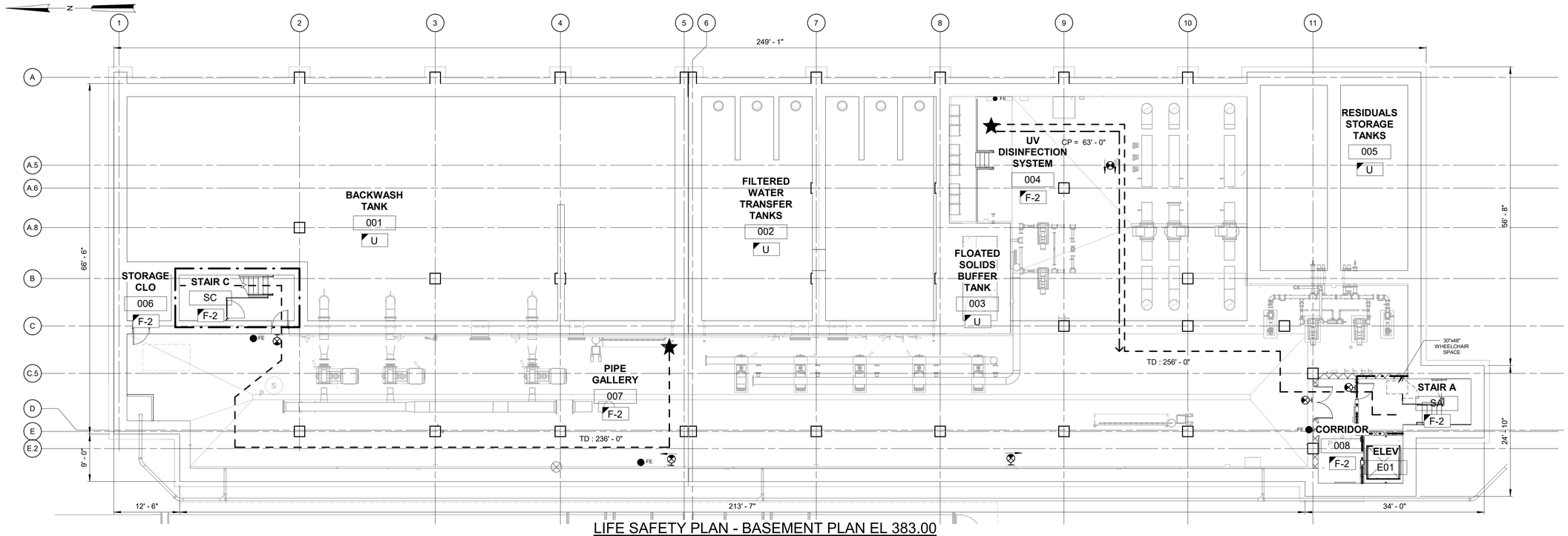

LIFE SAFETY PLAN - BASEMENT PLAN EL 383.00

3/32" = 1'-0"

LIFE SAFETY LEGEND:

- 1-HR FIRE RATED WALL
- 2-HR FIRE RATED WALL
- 3-HR FIRE RATED WALL
- EXIT ACCESS TRAVEL DISTANCE — TD=X'-X"
- COMMON PATH OF EGRESS TRAVEL — CP=X'-X"
- MOST REMOTE POINT
- X-X — OCCUPANCY USE GROUP
- EXIT LIGHT - WALL MTG
- EXIT LIGHT - CEILING MTG
- EMERGENCY - WALL MOUNT
- EM — EMERGENCY DOWNLIGHT
- FE — FIRE EXTINGUISHER - DRY CHEMICAL
- FEC — FIRE EXTINGUISHER CABINET
- CO_2 — FIRE EXTINGUISHER - CARBON DIOXIDE
- FIRE ALARM CONTROL PANEL
- ACCESSIBLE ROUTE
- FIRE RATED FLOOR SLAB

BUILDING CODE ANALYSIS
2020 BUILDING CODE OF NEW YORK STATE

CH=Chapter, HR=hours, IN=Inches, Max=Maximum, Min=Minimum, NA=Not Applicable, NFPA=National Fire Protection Association, NR=Not Required, NS=Non-sprinklered, OL=Occupant Load, S=Sprinklered, S1=Sprinklered maximum one story above grade plane, SF=Square Feet, StM=Sprinklered two or more stories above grade plane, SQ=Square

CODE ITEM	CODE REFERENCE	PROPOSED WATER FILTRATION PLANT	
OCCUPANCY CLASSIFICATION AND USE	CH 3	PROPOSED CLASSIFICATION AND USE	
	SECTION 306 FACTORY INDUSTRIAL GROUP F-2 FACTORY INDUSTRIAL USES THAT INVOLVE THE FABRICATION OR MANUFACTURING OF NONCOMBUSTIBLE MATERIALS THAT DURING FINISHING, PACKING OR PROCESSING DO NOT INVOLVE A SIGNIFICANT FIRE HAZARD SHALL BE CLASSIFIED AS F-2 OCCUPANCIES	GROUP F-2 PROCESS AND PROCESS OPERATIONS, ACCESSORY USE; BUILDING IS OF NON-COMBUSTIBLE MATERIALS THAT ARE PROCESSING WATER	
	SECTION 307 HIGH-HAZARD GROUP H	GROUP H-4 CHEMICAL STORAGE	
	SECTION 312 UTILITY AND MISC GROUP U	GROUP U WATER FILLED TANKS	
ACCESSORY OCCUPANCIES	CH 5	GROUP B ACCESSORY TO F-2	
	SECTION 508.2.3 AGGREGATE ACCESSORY OCCUPANCIES SHALL NOT OCCUPY MORE THAN 10 PERCENT OF THE FLOOR AREA OF THE STORY IN WHICH THEY ARE LOCATED AND SHALL NOT EXCEED THE TABULAR VALUES FOR NONSPRINKLERED BUILDINGS IN TABLE 506.2 FOR EACH SUCH ACCESSORY OCCUPANCY.	FIRST FLOOR: GROUP F-2 – 24,391 SF 24,391 SF x 10% = 2,439 SF GROUP B – 346 SF **346 SF < 2,439 SF** SECOND FLOOR: GROUP F-2 - 23,213 SF 20,069 SF x 10% = 2,007 SF GROUP B – 988 SF **988 SF < 2,007 SF**	
CONSTRUCTION TYPE	CH 6 TABLE 601	IIB	
BUILDING HEIGHT	CH 5 TABLE 504.3 ALLOWABLE BUILDING HEIGHT IN FEET ABOVE GRADE PLANE	ALLOWED	PROPOSED
	GROUP F-2, B ACCESSORY	75'-0" (S)	**35'-6" (S)**
	GROUP H-4	75'-0" (S)	**24'-0" (S)**
BUILDING HEIGHT (STORIES)	CH 5 TABLE 504.4 ALLOWABLE NUMBER OF STORIES ABOVE GRADE PLANE	ALLOWED	PROPOSED
	GROUPS F-2, B ACCESSORY	4 (S)	**2 (S)**
	GROUP H-4	4 (S)	**1 (S)**
	GROUPS U	3 (NS)	**1 (NS)**
BUILDING AREA	**TOTAL BUILDING AREA = 37,628 SF**		
	CH 5 TABLE 506.2 ALLOWABLE AREA FACTOR	ALLOWED	PROPOSED
	GROUP F-2, B ACCESSORY	69,000 SF (SM)	**31,406 SF (SM)**
	GROUP H-4	70,000 SF (S1)	**4,988 SF (S1)**
	GROUP U - THIS IS THE TOTAL SPACE OF ALL PROPOSED CONCRETE TANKS FILLED WITH WATER, SEPARATED BY MIN. 24" THICK CONCRETE WALLS, UN-OCCUPIABLE SPACE FOR HOUSING OF EQUIPMENT AND WITH LIMITED ACCESS FOR OCCASIONAL MAINTENANCE ONLY; CONCRETE TANK WALLS AND SLABS ARE NON-COMBUSTIBLE CONSTRUCTION; CONCRETE TANKS SPACES ARE INDIVIDUAL FIRE AREAS	8,500 SF (NS)	**1,234 SF (NS)**

FIRE RESISTANCE RATING REQUIREMENTS

CONSTRUCTION CLASSIFICATION	CH 6 TABLE 601 FIRE RESISTANCE RATINGS	RATING	
		REQUIRED	PROPOSED
PRIMARY STRUCTURAL FRAME	TYPE IIB	0HR	**0HR**
BEARING WALLS (EXTERIOR AND INTERIOR)	TYPE IIB	0HR	**0HR**
NONBEARING WALLS (INTERIOR)	TYPE IIB	0HR	**0HR**
FLOOR CONSTRUCTION	TYPE IIB	0HR	**0HR**
ROOF CONSTRUCTION	TYPE IIB	0HR	**0HR**
EXTERIOR WALL	CH 6 TABLE 602 FIRE RESISTANCE RATINGS BASED ON FIRE SEPARATION DISTANCE (FT)	REQUIRED	PROPOSED
	GROUP H: X > 30'	0 HR	**0HR**
	GROUP F-2, U: X > 30'	0 HR	**0HR**
OPENING PROTECTIVES	CH 7 TABLE 716.1(2) OPENING FIRE PROTECTION ASSEMBLIES, RATINGS AND MARKINGS	YES - DOORS AT FIRE RATED WALLS	YES ≤100 SQ. IN. DOOR VISION PANEL
SEPARATION OF OCCUPANCIES	CH 5 TABLE 508.4 SEPARATION BETWEEN OCCUPANCIES	REQUIRED	PROPOSED
	F-2 AND H-4	2 HR	2 HR
	F-2 AND B ACCESSORY SECTION 508.2.4: NO SEPARATION IS REQUIRED BETWEEN ACCESSORY OCCUPANCIES AND THE MAIN OCCUPANCY	NR	0 HR

CALCULATED OCCUPANT LOAD – CHAPTER 3 AND TABLE 1004.5

USE GROUP OR SPACE DESCRIPTION PER CHAPTER 3	TABLE 1004.5 MAXIMUM FLOOR AREA ALLOWANCES PER OCCUPANT		
	(a) FLOOR AREA (SF)	(b) LOAD FACTOR	(a/b) OCCUPANT LOAD
F-2	47,495 SF	300 GROSS	159
F-2 ACCESSORY BUSINESS	988 SF	150 GROSS	7
F-2 ACCESSORY LOCKERS	512 SF	50 GROSS	11
F-2 ACCESSORY CONFERENCE	346 SF	20 NET	18
H-4	4,988 SF	300 GROSS	17
U	TANKAGE – NO OCCUPANCY	NA	0
	TOTAL OCCUPANT LOAD		212

EGRESS REQUIREMENTS – CHAPTER 10

		ALLOWED	PROPOSED
COMMON PATH OF EGRESS TRAVEL	TABLE 1006.2.1 SPACES WITH ONE EXIT OR EXIT ACCESS DOORWAY		
	OCCUPANCY F (S)	100'-0" MAX OL = 49 MAX	**SEE PLANS OL = 10 MAX**
	ACCESSORY OCCUPANCY B (S)	100'-0" MAX OL = 49 MAX	**SEE PLANS OL = 7 MAX**
	OCCUPANCY H-4 (S)	75'-0" MAX OL = 10	**SEE PLANS OL = 5 MAX**
EGRESS FROM STORIES	TABLE 1006.3.2 MINIMUM NUMBER OF EXITS PER STORY	REQUIRED	PROPOSED
	OCCUPANT LOAD 1-500	2 EXITS	2 EXITS MIN
ACCESSIBLE EGRESS	SECTION 1009.2 CONTINUITY AND COMPONENTS: 1. ACCESSIBLE ROUTES 2. INTERIOR EXIT STAIRWAYS	YES	YES
	SECTION 1009.3.2 STAIRWAY WIDTH OF 48" BETWEEN HANDRAILS EXCEPTION 1: THE CLEAR WIDTH OF 48" BETWEEN HANDRAILS IS NOT REQUIRED IN BUILDINGS EQUIPPED THROUGHOUT WITH AN AUTOMATIC SPRINKLER SYSTEM INSTALLED IN ACCORDANCE WITH SECTION 903.3.1.1.	NO	NO
	SECTION 1009.3.3 AREA OF REFUGE EXCEPTION 2: AREAS OF REFUGE ARE NOT REQUIRED AT STAIRWAYS IN BUILDINGS EQUIPPED THROUGHOUT WITH AN AUTOMATIC SPRINKLER SYSTEM INSTALLED IN ACCORDANCE WITH SECTION 903.3.1.1.	NO	YES – WITHIN ENLARGED STAIR LANDING
DOORS	SECTION 1010.1.1 MINIMUM CLEAR OPENING WIDTH	32" MIN	36" MIN
PANIC HARDWARE	SECTION 1010.1.10	YES	YES
STAIRWAYS	SECTION 1011.2 STAIRWAYS WIDTH AND CAPACITY	44" MIN 36" IF OL < 50	**44" MIN OL = 71 MAX**
HANDRAIL	SECTION 1014.2. HANDRAIL HEIGHT	34" MIN 38" MAX	**34" MIN 38" MAX**
GUARDRAIL	SECTION 1015.3 GUARDRAIL HEIGHT	42" MIN	**42" MIN**
CORRIDOR	TABLE 1020.2 0.2" PER OCCUPANT	<50 OL=36" MIN	**36" MIN OL = 35 MAX**
INTERIOR EXIT STAIRWAYS	SECTION 1023.3.1 EXTENSION WHERE INTERIOR EXIT STAIRWAYS ARE EXTENDED TO AN EXIT DISCHARGE BY AN EXIT PASSAGEWAY, THE INTERIOR EXIT STAIRWAY SHALL BE SEPARATED FROM THE EXIT PASSAGEWAY BY A FIRE BARRIER CONSTRUCTED IN ACCORDANCE WITH SECTION 707 OR A HORIZONTAL ASSEMBLY CONSTRUCTED IN ACCORDANCE WITH SECTION 711, OR BOTH. THE FIRE-RESISTANCE RATING SHALL BE NOT LESS THAN THAT REQUIRED FOR THE INTERIOR EXIT STAIRWAY.	YES	**YES 1 HR IN ACCORDANCE WITH SECTION 1024 EXIT PASSAGEWAYS**
EXIT DISCHARGE	SECTION 1028.1 EXITS SHALL DISCHARGE DIRECTLY TO THE EXTERIOR OF THE BUILDING EXCEPTION 1: NOT MORE THAN 50% INTERIOR EXIT STAIRWAYS PERMITTED TO EGRESS THROUGH AREAS ON LEVEL OF DISCHARGE PROVIDED CONDITIONS 1.1 THROUGH 1.4 ARE MET.	ALLOWED YES	PROPOSED **YES < 50% OF INTERIOR EXIT STAIRWAYS EXIT THROUGH LOBBY**
EXIT ACCESS TRAVEL DISTANCE	TABLE 1017.2	ALLOWED	PROPOSED
	OCCUPANCY F-2 (S)	400'-0"	**SEE PLANS**
	ACCESSORY OCCUPANCY B (S)	300'-0"	**SEE PLANS**
	OCCUPANCY H-4 (S)	175'-0"	**SEE PLANS**

ACCESSIBILITY – CHAPTER 11

		REQUIRED	PROPOSED
CH 11			
SECTION 1102 (ICC A117.1)		YES	**YES**
SECTION 1103 – SCOPING REQUIREMENTS		YES	**YES - GROUP B ACCESSORY**
SECTION 1103.2.4 UTILITY BUILDINGS		NO	**NO**
SECTION 1103.2.9 EQUIPMENT SPACES		NO	**NO**
LIFE SAFETY SYSTEM REQUIREMENTS			
		REQUIRED	PROPOSED
EMERGENCY LIGHTING	CH 10 SECTION 1008	YES	YES
EXIT SIGNS	CH 10 SECTION 1013	YES	YES
AUTOMATIC SPRINKLERS	CH 9 SECTION 903.2 GROUP F-2	NO	YES
SEE **TOWN/VILLAGE OF HARRISON** TABLE BELOW	CH 9 SECTION 903.2.5 GROUP H-4	YES	YES
	CH 9 SECTION 903.3.1.1 NFPA 13 SPRINKLER SYSTEMS	YES	YES
	CH 9 SECTION 903.3.1.1.1 EXEMPT LOCATIONS 1. A ROOM WHERE THE APPLICATION OF WATER, OR FLAME AND WATER, CONSTITUTES A SERIOUS LIFE OR FIRE HAZARD.	NO	NO EXEMPT AT ELECTRICAL ROOMS
	NFPA 13 9.2.6 SPRINKLERS SHALL NOT BE REQUIRED IN ELECTRICAL EQUIPMENT ROOMS WHERE ALL OF THE FOLLOWING CONDITIONS ARE MET: 1. THE ROOM IS DEDICATED TO ELECTRICAL EQUIPMENT ONLY. 2. ONLY DRY-TYPE OR LIQUID-TYPE WITH LISTED K-CLASS FLUID ELECTRICAL EQUIPMENT IS USED. 3. EQUIPMENT IS INSTALLED IN A 2-HOUR FIRE-RATED ENCLOSURE INCLUDING PROTECTION FOR PENETRATIONS. 4. STORAGE IS NOT PERMITTED IN THE ROOM.	NO EXEMPT	NO EXEMPT AT ELECTRICAL ROOMS
PORTABLE FIRE EXTINGUISHER	CH 9 SECTION 906	YES (TYPE ABC)	YES (TYPE ABC)
FIRE ALARM	CH 9 SECTION 907.2.4 GROUP F	YES	YES
	CH 9 SECTION 907.2.5 GROUP H	YES	YES
STRUCTURAL AND SEISMIC DESIGN LOADS			
SEE STRUCTURAL DRAWINGS			

2020 NEW YORK STATE PLUMBING CODE

TABLE 403.1 MIN NUMBER OF REQUIRED PLUMBING FIXTURES

CLASSIFICATION	OCCUPANT LOAD	WATER CLOSETS	URINALS	LAVS	DRINKING FOUNTAIN	SERVICE SINK
BUSINESS ACCESSORY	25	1	50% OF REQUIRED WATER CLOSETS	1	1	1
FACTORY AND INDUSTRIAL	176	2		2	1	1
CHEMICAL STORAGE AND WATER FILLED TANKS WILL NOT BE OCCUPIED						
TOTAL REQUIRED		3	1	0	2	2
TOTAL PROPOSED		3	1	3	2	2

TOWN/VILLAGE OF HARRISON
TOWN CODE, PART IV: GENERAL LEGISLATION

		REQUIRED	PROPOSED
CHAPTER 143 FIRE PREVENTION	SECTION 143-28 BUILDINGS REQUIRED TO HAVE FIRE SPRINKLER SYSTEMS. A. ANY BUILDING CONSTRUCTED AFTER EFFECTIVE DATE OF THIS LAW SHALL BE REQUIRED TO HAVE A FIRE SPRINKLER SYSTEM APPROVED BY THE FIRE INSPECTOR/FIRE MARSHAL OR HIS DULY AUTHORIZED REPRESENTATIVE BEFORE INSTALLATION. THE SYSTEM SHALL MEET THE REQUIREMENTS OF THE NATIONAL FIRE PROTECTION ASSOCIATION STANDARDS AS REFERENCED IN THE NEW YORK STATE UNIFORM CODE.	YES	**YES**
	SECTION 143-31 EXCEPTIONS. A. FIRE SPRINKLERS SHALL NOT BE REQUIRED TO BE INSTALLED IN SPACES WHERE THE DISCHARGE OF WATER WOULD BE HAZARDOUS OR DAMAGING TO EQUIPMENT. IN SUCH PLACES OTHER APPROVED FIRE-EXTINGUISHING EQUIPMENT SHALL BE PROVIDED, AS APPROVED BY THE HARRISON BUREAU OF FIRE PREVENTION.	NO	**NO EXEMPT AT ELECTRICAL ROOMS**

ENERGY CODE REQUIREMENTS
2020 ENERGY CONSERVATION CONSTRUCTION CODE OF NEW YORK STATE

HARRISON, NY	**CLIMATE ZONE**	**4A**	
BUILDING ENVELOPE REQUIREMENTS	TABLE ECC402.1.3 OPAQUE THERMAL ENVELOPE REQUIREMENTS, R-VALUE METHOD	REQUIRED	PROPOSED
ROOF	INSULATED ENTIRELY ABOVE ROOF DECK	R-30 CI	**R-30 CI**
WALLS, ABOVE GRADE	MASS	R-9.5 CI	**R-10.7 CI**
	METAL FRAMED	R-13 + R-7.5 CI	**R-24 + R-10.7 CI**
WALLS, BELOW GRADE	BELOW-GRADE WALL	R -7.5 CI FOR 10 FT BELOW GRADE	**R-10 CI FOR 10 FT BELOW GRADE**
SLAB ON GRADE FLOOR	UNHEATED SLAB	R -10 FOR 24" BELOW	**R-10 FOR 24" BELOW**
OPAQUE DOORS	NONSWINGING	R-4.75	**R-8.0**
BUILDING ENVELOPE FENESTRATION	TABLE ECC402.4 BUILDING ENVELOPE FENESTRATION MAXIMUM U-FACTOR	REQUIRED	PROPOSED
DOORS	OPERABLE	U 0.45	**U 0.29**
	ENTRANCE	U 0.77	**U 0.28**
WINDOWS	FIXED FENESTRATION	U 0.38	**U 0.26**
SOLAR HEAT GAIN COEFFICIENT (SHGC)	PF < 0.2	U 0.36	**U 0.35**
	0.2 ≤ PF < 0.5	U 0.43	**U 0.35**
	PF ≥ 0.5	U 0.58	**U 0.35**

WARNING
IT IS A VIOLATION OF SECTION 7209.2 OF THE NEW YORK STATE EDUCATION LAW FOR ANY PERSON, UNLESS ACTING UNDER THE DIRECTION OF A LICENSED PROFESSIONAL ENGINEER, TO ALTER IN ANY WAY PLANS, SPECIFICATIONS, PLATS OR REPORTS TO WHICH THE SEAL OF A PROFESSIONAL ENGINEER HAS BEEN APPLIED. IF AN ITEM BEARING THE SEAL OF A PROFESSIONAL ENGINEER IS ALTERED, THE ALTERING ENGINEER SHALL AFFIX TO THE ITEM HIS SEAL AND THE NOTATION "ALTERED BY" FOLLOWED BY HIS SIGNATURE, THE DATE, AND A SPECIFIC DESCRIPTION OF THE ALTERATION.

3/32" = 1'-0"

10 8 6 4 2 0 11"

REV	ISSUED FOR	DATE	BY

PROJECT ENGINEER: R. FROST
DESIGNED BY: J. WOJCIESKI
DRAWN BY: J.MARTINEZ
CHECKED BY: M. STALLONE

IF THIS BAR DOES NOT MEASURE 1" THEN DRAWING IS NOT TO FULL SCALE 0 1/2" 1"

BID SET

REGISTERED ARCHITECT JENNIFER WOJCIESKI 034146 STATE OF NEW YORK

Hazen

HAZEN AND SAWYER
498 SEVENTH AVENUE, 11th FLOOR
NEW YORK, NEW YORK 10018

WESTCHESTER JOINT WATER WORKS
MAMARONECK, NY

RYE LAKE WATER FILTRATION PLANT
HARRISON, NY

FILTRATION PLANT
ARCHITECTURAL
CODE COMPLIANCE SUMMARY 1 OF 3

DATE: FEB 2025
HAZEN NO.: 90388-000
CONTRACT NO.: A1364-A
DRAWING NUMBER: A-002

Autodesk Docs://90388-000_Rye_Lake_Filtration/90388-000-WFP-A.rvt
2/19/2025 4:34:20 PM

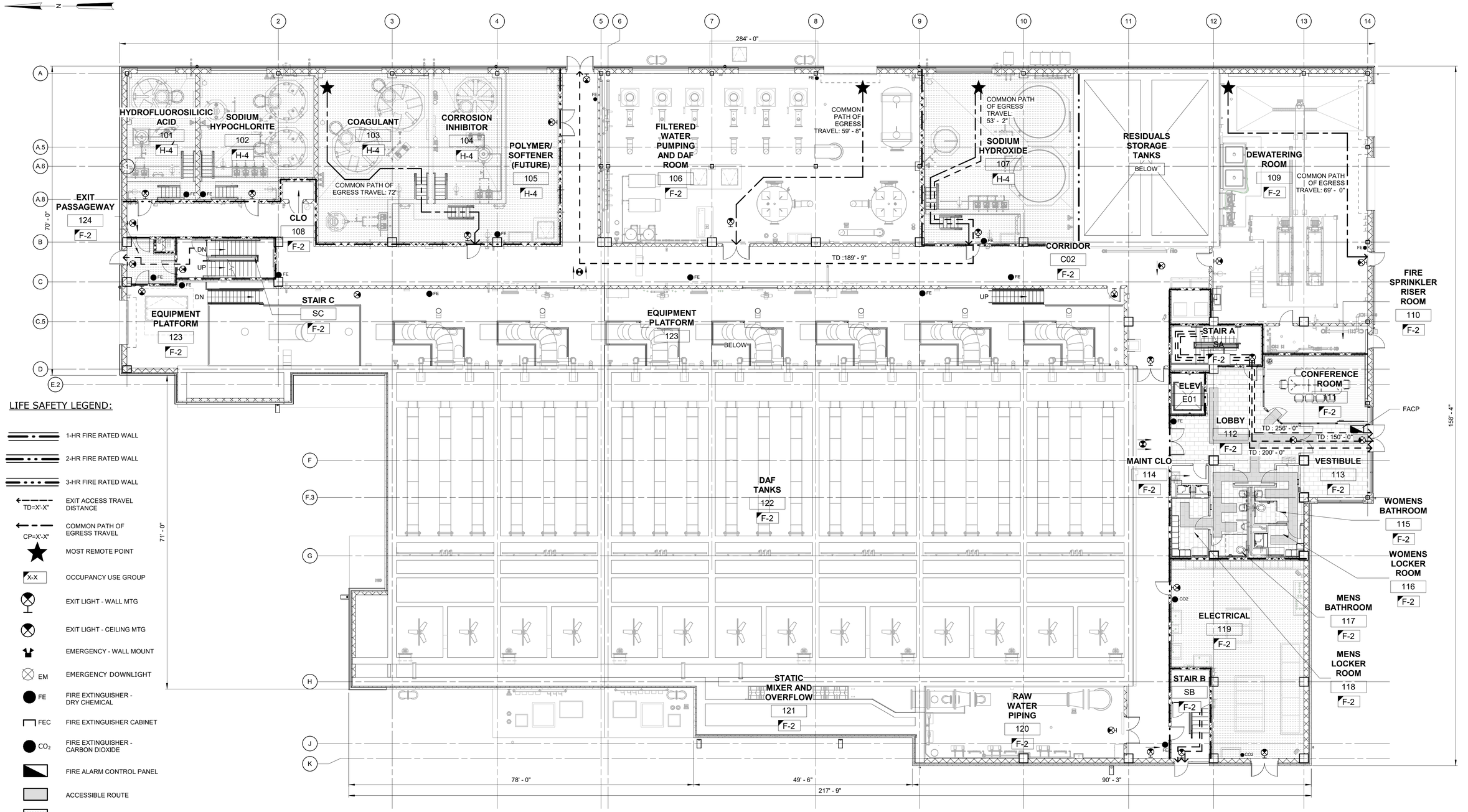

LIFE SAFETY LEGEND:

- 1-HR FIRE RATED WALL
- 2-HR FIRE RATED WALL
- 3-HR FIRE RATED WALL
- TD=X'-X" — EXIT ACCESS TRAVEL DISTANCE
- CP=X'-X" — COMMON PATH OF EGRESS TRAVEL
- MOST REMOTE POINT
- X-X — OCCUPANCY USE GROUP
- EXIT LIGHT - WALL MTG
- EXIT LIGHT - CEILING MTG
- EMERGENCY - WALL MOUNT
- EM — EMERGENCY DOWNLIGHT
- FE — FIRE EXTINGUISHER - DRY CHEMICAL
- FEC — FIRE EXTINGUISHER CABINET
- CO_2 — FIRE EXTINGUISHER - CARBON DIOXIDE
- FIRE ALARM CONTROL PANEL
- ACCESSIBLE ROUTE
- FIRE RATED FLOOR SLAB

WARNING
IT IS A VIOLATION OF SECTION 7209.2 OF THE NEW YORK STATE EDUCATION LAW FOR ANY PERSON, UNLESS ACTING UNDER THE DIRECTION OF A LICENSED PROFESSIONAL ENGINEER, TO ALTER IN ANY WAY PLANS, SPECIFICATIONS, PLATS OR REPORTS TO WHICH THE SEAL OF A PROFESSIONAL ENGINEER HAS BEEN APPLIED. IF AN ITEM BEARING THE SEAL OF A PROFESSIONAL ENGINEER IS ALTERED, THE ALTERING ENGINEER SHALL AFFIX TO THE ITEM HIS SEAL AND THE NOTATION "ALTERED BY" FOLLOWED BY HIS SIGNATURE, THE DATE, AND A SPECIFIC DESCRIPTION OF THE ALTERATION.

LIFE SAFETY PLAN -FIRST FLOOR PLAN EL 407.00

3/32" = 1'-0"

3/32" = 1'-0"

REV	ISSUED FOR	DATE	BY

PROJECT ENGINEER:	R. FROST
DESIGNED BY:	J. WOJCIESKI
DRAWN BY:	J.MARTINEZ
CHECKED BY:	M. STALLONE

IF THIS BAR DOES NOT MEASURE 1" THEN DRAWING IS NOT TO FULL SCALE (0, 1/2", 1")

BID SET

REGISTERED ARCHITECT JENNIFER WOJCIESKI 034146 STATE OF NEW YORK

Hazen

HAZEN AND SAWYER
498 SEVENTH AVENUE, 11th FLOOR
NEW YORK, NEW YORK 10018

WESTCHESTER JOINT WATER WORKS
MAMARONECK, NY

RYE LAKE WATER FILTRATION PLANT
HARRISON, NY

FILTRATION PLANT
ARCHITECTURAL
CODE COMPLIANCE SUMMARY 2 OF 3

DATE:	FEB 2025
HAZEN NO.:	90388-000
CONTRACT NO.:	A1364-A
DRAWING NUMBER:	A-003

Autodesk Docs://90388-000_Rye_Lake_Filtration/90388-000-WFP-A.rvt
2/19/2025 4:34:32 PM

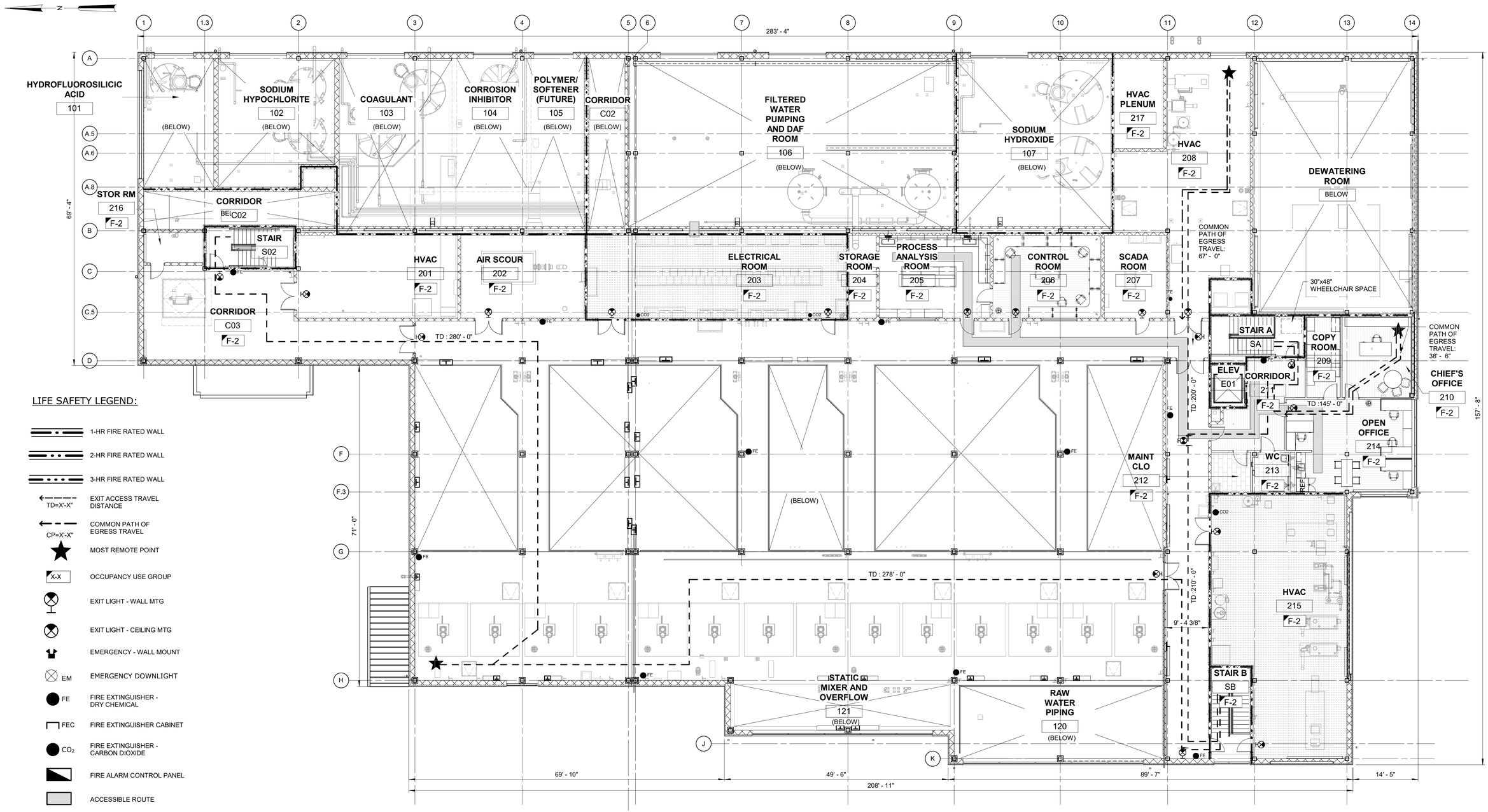

LIFE SAFETY PLAN - SECOND FLOOR PLAN EL 421.00

3/32" = 1'-0"

3/32" = 1'-0" 10 8 6 4 2 0 11'

LIFE SAFETY LEGEND:

- 1-HR FIRE RATED WALL
- 2-HR FIRE RATED WALL
- 3-HR FIRE RATED WALL
- EXIT ACCESS TRAVEL DISTANCE (TD=X'-X")
- COMMON PATH OF EGRESS TRAVEL (CP=X'-X")
- MOST REMOTE POINT
- X-X OCCUPANCY USE GROUP
- EXIT LIGHT - WALL MTG
- EXIT LIGHT - CEILING MTG
- EMERGENCY - WALL MOUNT
- EM EMERGENCY DOWNLIGHT
- FE FIRE EXTINGUISHER - DRY CHEMICAL
- FEC FIRE EXTINGUISHER CABINET
- CO_2 FIRE EXTINGUISHER - CARBON DIOXIDE
- FIRE ALARM CONTROL PANEL
- ACCESSIBLE ROUTE
- FIRE RATED FLOOR SLAB

WARNING
IT IS A VIOLATION OF SECTION 7209.2 OF THE NEW YORK STATE EDUCATION LAW FOR ANY PERSON, UNLESS ACTING UNDER THE DIRECTION OF A LICENSED PROFESSIONAL ENGINEER, TO ALTER IN ANY WAY PLANS, SPECIFICATIONS, PLATS OR REPORTS TO WHICH THE SEAL OF A PROFESSIONAL ENGINEER HAS BEEN APPLIED. IF AN ITEM BEARING THE SEAL OF A PROFESSIONAL ENGINEER IS ALTERED, THE ALTERING ENGINEER SHALL AFFIX TO THE ITEM HIS SEAL AND THE NOTATION "ALTERED BY" FOLLOWED BY HIS SIGNATURE, THE DATE, AND A SPECIFIC DESCRIPTION OF THE ALTERATION.

REV	ISSUED FOR	DATE	BY

PROJECT ENGINEER:	R. FROST
DESIGNED BY:	J. WOJCIESKI
DRAWN BY:	J.MARTINEZ
CHECKED BY:	M. STALLONE
IF THIS BAR DOES NOT MEASURE 1" THEN DRAWING IS NOT TO FULL SCALE	0 1/2" 1"

BID SET

REGISTERED ARCHITECT JENNIFER WOJCIESKI 034146 STATE OF NEW YORK

Hazen
HAZEN AND SAWYER
498 SEVENTH AVENUE, 11th FLOOR
NEW YORK, NEW YORK 10018

WESTCHESTER JOINT WATER WORKS
MAMARONECK, NY

RYE LAKE WATER FILTRATION PLANT
HARRISON, NY

FILTRATION PLANT
ARCHITECTURAL
CODE COMPLIANCE SUMMARY 3 OF 3

DATE:	FEB 2025
HAZEN NO.:	90388-000
CONTRACT NO.:	A1364-A
DRAWING NUMBER:	A-004

Autodesk Docs://90388-000_Rye_Lake_Filtration/90388-000-WFP-A.rvt
2/19/2025 4:34:44 PM

ARCHITECTURAL KEYNOTES

THE ARCHITECTURAL NOTING SYSTEM PROVIDES IDENTIFICATION OF MATERIALS AND PRODUCTS ON THE DRAWINGS AND CONNECT THE DRAWING TO THE SPECIFICATIONS.

DIVISION 3

03 15 00.0 - WATERSTOPS	PROTECT EXPOSED WATERSTOPS BELOW GRADE AS INDICATED ON THE STRUCTURAL DRAWINGS WHERE PROVISIONS ARE MADE FOR FUTURE EXPANSION OF CONCRETE. REFER TO NOTE 07 21 00.2 CONCRETE-FACED INSULATION.
03 30 00.0 - OPENINGS	COORDINATE LOCATIONS OF FLOOR AND ROOF OPENINGS FOR PIPES, DUCT WORK, CONDUIT AND GRATING.
03 35 00.0 - EXTERIOR CONCRETE FINISH	PROVIDE NON-SLIP SHAKE ON AGGREGATE THROUGHOUT ALL HORIZONTAL CONCRETE WALKING SURFACES, RAMP, RAMP PLATFORMS, AND ALL SIDEWALKS. REFER TO SECTION 03 35 00 - CONCRETE FINISHES FOR ADDITIONAL INFORMATION.
03 35 00.1 - EXPOSED CONCRETE FINISH	PROVIDE TYPE III GROUT CLEANED FINISH AT ALL INTERIOR CONCRETE AND CONCRETE COLUMNS THROUGHOUT ENTIRE PROJECT.
03 35 00.2 - EXPOSED CONCRETE WALLS	ALL EXTERIOR EXPOSED CONCRETE ASSOCIATED WITH THE EXTERIOR WALL OF THE BUILDING AND TANKS SHALL BE IN ACCORDANCE WITH SECTION 03 35 00 CONCRETE FINISHES UTILIZING FORM LINER PANELS, FORMED JOINTS AT LOCATIONS AS INDICATED ON THE CONTRACT DOCUMENTS. FORMS ARE REQUIRED TO COMPLY WITH VISUAL ASPECT OF THE WORK.
03 35 00.3 - CONCRETE AT CONTAINMENT AREA	REFER TO NOTE 09 97 00.0 AND 09 97 00.1 FOR CHEMICAL-RESISTANT COATINGS. PROVIDE CONCRETE FINISH PREPARED IN ACCORDANCE WITH MANUFACTURERS REQUIREMENTS FOR CHEMICAL-RESISTANT COATINGS SUBSTRATE PREPARATION SHALL BE WORK OF SECTION 09 97 00.
03 35 00.4 - HEAVY-DUTY CONCRETE FLOOR FINISH	PROVIDE HEAVY-DUTY CONCRETE FLOOR FINISHING WITH NON-SLIP SHAKE ON AGGREGATE THROUGHOUT ALL INTERIOR HORIZONTAL CONCRETE SURFACES WHERE INDICATED IN THE FINISH SCHEDULE.
03 35 00.5 - ELEVATOR CAB FLOOR	PROVIDE 1-INCH THICK TYPE A4 CONCRETE FLOOR SLAB AT CAB OF ELEVATOR. COORDINATE FINISH OF SLAB WITH SECTION 09 65 00 – RESILIENT FLOORING. REFER TO NOTE 09 65 00.0 – RESILIENT FLOORING FOR ADDITIONAL INFORMATION.
03 35 00.6 - MOCK WALL SLAB	SET MOCK WALL ON 8-FOOT BY 4-FOOT BY 6-INCH-THICK CONCRETE PAD AND CURB WITH 10 X 10 WWM OVER 6-INCH GRAVEL BED. REFER TO STRUCTURAL DRAWINGS FOR CONCRETE CURB FOR MASONRY WALL.

DIVISION 4

AL FASTENERS	
04 05 13.0 - COLLAR JOINTS	SECURE TOP OF ALL MASONRY WALLS TO UNDERSIDE OF STRUCTURE AS INDICATED ON STRUCTURAL DRAWINGS AND SECTION 04 05 19 – MASONRY ANCHORAGE AND REINFORCING.
04 05 19.0 - TOP OF MASONRY WALL	REFER TO STRUCTURAL DRAWINGS FOR VERTICAL REINFORCING. REFER TO SECTION 04 05 19 MASONRY ANCHORAGE AND REINFORCING AND STRUCTURAL DRAWING FOR LINTELS AND BOND BEAMS. ALL VERTICAL REINFORCING SHALL BE PLACED IN FULLY GROUTED CELLS.
04 05 19.1 - EXTERIOR MASONRY WALL VERTICAL REINFORCING	REFER TO STRUCTURAL DRAWINGS FOR VERTICAL REINFORCING. REFER TO SPECIFICATION 04 05 19 MASONRY ANCHORAGE AND REINFORCING AND STRUCTURAL DRAWING FOR LINTELS AND BOND BEAMS. ALL VERTICAL REINFORCING SHALL BE PLACED IN FULLY GROUTED CELLS.
04 05 19.2 - INTERIOR MASONRY WALL VERTICAL REINFORCING	REFER TO STRUCTURAL DRAWINGS FOR VERTICAL REINFORCING. ALL VERTICAL REINFORCING SHALL BE PLACED IN FULLY GROUTED CELLS. REFER TO SECTION 04 22 23.23 PREFACED CONCRETE UNIT MASONRY AND STRUCTURAL DRAWINGS FOR LINTELS AND BOND BEAMS.
04 05 19.4 - MASONRY WALL HORIZONTAL REINFORCEMENT	INSTALL CONTINUOUS HEAVY DUTY METAL TRUSS MESH REINFORCEMENT AT EVERY TWO BLOCK COURSES. PROVIDE METAL TRUSS MESH REINFORCEMENT IN STAINLESS STEEL FOR EXTERIOR WALLS AND IN GALVANIZED STEEL FOR INTERIOR WALLS.
04 05 19.5 - BOND BEAMS	REFER TO ARCHITECTURAL DRAWINGS FOR PARTITION TYPES AND TOP OF MASONRY WALL ANCHORAGE. REFER TO STRUCTURAL DRAWINGS FOR CONCRETE MASONRY LINTEL SCHEDULE AND REINFORCING FOR ALL BOND BEAMS AT TOP OF WALL CONDITIONS. ALL REINFORCING SHALL BE PLACED IN FULLY GROUTED CELLS.
04 05 19.6 - MASONRY WALL ATTACHMENT	SECURE EXTERIOR AND INTERIOR MASONRY WALLS TO BUILDING STRUCTURE IN ACCORDANCE STRUCTURAL DRAWINGS AND SECTION 04 05 19 – MASONRY ANCHORAGE AND REINFORCING.
04 05 19.7 - MOCK-UP WALL	PROVIDE MOCK-UP WALL AT THE PROJECT SITE A MINIMUM OF 8-FOOT WIDE 8-FOOT HIGH WITH 4-FOOT RETURNS ON BOTH SIDES. PROVIDE A VERTICAL CONTROL JOINT ALONG THE SIDES OF THE OPENING FOR THE FULL HEIGHT OF PANEL FOR EACH MOCK-UP WALL. REFER TO DETAILS FOR CORNER, BASE OF WALL AND COPING. REFER TO 04 05 19 SERIES OF NOTES FOR WALL ASSEMBLY. REFER TO NOTE 03 35 00.4 FOR MOCK WALL SLAB. 04 22 23.23.4 FOR GFB VENEER, 04 43 13.0 FOR STONE MASONRY VENEER, AND 07 41 63.6 FOR WORK OF 07 41 63 FABRICATED WALL PANEL ASSEMBLIES.
04 05 19.8 - AIR AND VAPOR BARRIERS	ALL MASONRY JOINTS ON SURFACES TO RECEIVE AIR AND VAPOR BARRIERS TO BE FLUSH JOINTS. COORDINATE THE INSTALLATION OF TRANSITION MEMBRANES PRIOR TO THE START OF WORK. TRANSITION MEMBRANES AT THE BASE OF MASONRY WALLS SHALL BE INSTALLED PRIOR TO START OF WORK OF THE MASONRY WALL. REFER TO SECTION 07 27 00.0– WALL SYSTEM VAPOR AND AIR BARRIERS FOR ALL WORK ASSOCIATED WITH MASONRY EXTERIOR WALL SYSTEMS.
04 05 19.9 - CAVITY DRAINAGE MAT	PROVIDE CAVITY DRAINAGE MAT IN THICKNESS OF ACTUAL AIR SPACE MINUS TOLERANCES RECOMMENDED BY MANUFACTURER.
04 05 19.10 - WEEP VENTS	PROVIDE ROWS OF WEEP VENTS IN THE HEAD JOINTS OF THE FIRST COURSE OF MASONRY IMMEDIATELY ABOVE ALL CONCEALED FLASHING. SPACE WEEP VENTS 16 INCHES ON CENTERS HORIZONTALLY. WEEP VENTS SHALL BE SIZED IN ACCORDANCE WITH SECTION 04 05 19 – MASONRY ANCHORAGE AND REINFORCING.
04 22 23.23.0 - GROUND FACED BLOCK	ALL MASONRY SHALL BE GROUND FACED BLOCK UNLESS NOTED OTHERWISE.
04 22 23.23.1 - EXTERIOR MASONRY BACKUP	ALL EXTERIOR MASONRY WALL SYSTEMS SHALL BE COMPRISED OF 12-INCH GFB BACKUP MASONRY WITH MASONRY VENEER WAINSCOT AND METAL PANEL CLADDING PER THE PARTITION TYPES ON ARCHITECTURAL DRAWINGS. BACKUP UNIT MASONRY SHALL HAVE EXPOSED SIDES FINISHED AT THE INTERIOR FACE. EXTERIOR MASONRY WALLS SHALL BE ANCHORED BY REINFORCING INTO CONCRETE SLABS OR UNDERSIDES OF BEAMS IN ACCORDANCE WITH THE STRUCTURAL DRAWINGS AND SECTION 04 05 19 – MASONRY ANCHORAGE AND REINFORCING.
04 22 23.23.2 - INTERIOR MASONRY WALLS	ALL INTERIOR MASONRY WALLS SHALL BE PER THE PARTITION TYPES ON ARCHITECTURAL DRAWINGS AND WITH EXPOSED SIDES FINISHED UNLESS OTHERWISE NOTED ON THE FINISH SCHEDULE. INTERIOR MASONRY WALLS SHALL BE ANCHORED BY REINFORCING INTO CONCRETE SLABS OR UNDERSIDES OF BEAMS IN ACCORDANCE WITH THE STRUCTURAL DRAWINGS AND SECTION 04 05 19 – MASONRY ANCHORAGE AND REINFORCING.
04 22 23.23.3 - INTERIOR MASONRY CHASE WALL	ALL INTERIOR MASONRY CHASE WALLS SHALL BE PER THE PARTITION TYPES ON ARCHITECTURAL DRAWINGS AND WITH EXPOSED SIDES FINISHED UNLESS RECEIVING TILE AS NOTED ON THE FINISH SCHEDULE. INTERIOR MASONRY CHASE WALLS SHALL BE ANCHORED BY REINFORCING INTO CONCRETE SLABS OR UNDERSIDES OF BEAMS IN ACCORDANCE WITH THE STRUCTURAL DRAWINGS AND SECTION 04 05 19.
04 22 23.23.4 - GFB VENEER	PROVIDE GROUND FACED BLOCK VENEER SECURED TO EXTERIOR MASONRY BACKUP WORK OF 04 22 23.23.1 IN AREAS INDICATED ON THE ARCHITECTURAL DRAWINGS AND IN ACCORDANCE WITH SECTION 04 05 19 – MASONRY ANCHORAGE AND REINFORCING. PROVIDE SPECIAL SHAPE RETURN CORNER GROUND FACED BLOCK AT CORNERS OF THE BUILDING TO MAINTAIN MASONRY COURSING.
04 22 23.23.5 - CORNER STONE	PROVIDE CORNER STONE WITH POCKET TO HOUSE TIME CAPSULE. CORNER STONE TO BE SET FLUSH WITH EXTERIOR FACE WALL SYSTEM. CORNER STONE DEPTH SHALL BE SET 6-INCHES INTO MASONRY BACKUP WALL. VERTICAL REINFORCING TO BE COORDINATED TO RUN TO BOTH SIDES OF DATE STONE. PROVIDE UNIT MASONRY TO PRODUCE FLUSH CONDITION AT REAR OF UNIT MASONRY WALL SYSTEM.
04 22 23.23.6 - GFB SILL	PROVIDE GROUND FACED SILL BLOCK WITH 2" CHAMFER SECURED TO EXTERIOR MASONRY BACKUP WORK OF 04 22 23.23.1 IN AREAS INDICATED ON THE ARCHITECTURAL DRAWINGS AND IN ACCORDANCE WITH SECTION 04 05 19 – MASONRY ANCHORAGE AND REINFORCING.
04 22 23.23.7 - CONTROL JOINTS	PROVIDE PREFORMED GASKET IN CONTINUOUS LENGTHS, BACKER ROD AND SEALANT AT ALL CONTROL JOINTS. BUTT AND CORNER JOINTS SHALL BE SEALED IN ACCORDANCE WITH MANUFACTURER'S INSTRUCTIONS. CONTROL JOINTS SHALL BE SIZED AS INDICATED ON THE CONTRACT DRAWINGS. HORIZONTAL JOINT REINFORCEMENT SHALL NOT CONTINUE THROUGH CONTROL JOINTS.
04 22 23.23.8 - UNIT MASONRY PARTITIONS	IN THE EVENT THAT A PARTITION TYPE IS NOT INDICATED ON THE CONTRACT DOCUMENTS, THE CONTRACTOR SHALL PROVIDE A FULL HEIGHT (RUN TO UNDERSIDE OF STRUCTURE) MULTI-WYTHE UNIT MASONRY PARTITION IN COORDINATION OF THE FINISH SCHEDULE. IF THE THICKNESS OF THE PARTITION IS NOT INDICATED, THE MINIMUM THICKNESS OF PARTITION SHALL BE 12-INCHES THICK. IF THE FINISH OF THE PARTITION CANNOT BE DETERMINED THEN THE PARTITION SHALL BE CONSTRUCTED OF GROUND FACED BLOCK FINISHED ON BOTH SIDES. THE PARTITION SHALL BE DEEMED TO BE A 2-HOUR FIRE RATED PARTITION OF THE FIRE RATING CANNOT BE DETERMINED. CONFLICTS BETWEEN THE PARTITION TYPE AND FINISH SCHEDULE SHALL BE BROUGHT TO THE ENGINEER ATTENTION FOR ALL DETERMINATIONS OF PARTITION TYPES REQUIRED.
04 43 13.0 - STONE MASONRY VENEER	PROVIDE CONNECTICUT BLEND FULL BED STONE VENEER SECURED TO EXTERIOR MASONRY BACKUP WORK OF 04 22 23.23.1 IN AREAS INDICATED ON THE ARCHITECTURAL DRAWINGS AND IN ACCORDANCE WITH SECTIONS 04 43 13 – STONE MASONRY AND 04 05 19 – MASONRY ANCHORAGE AND REINFORCING.
04 43 13.1 - STONE WAINSCOT SILL	PROVIDE BLUESTONE WAINSCOT SILL WITH DRIP EDGE AT TOP OF STONE VENEER SECURED TO EXTERIOR MASONRY BACKUP WORK OF 04 22 23.23.1 IN AREAS INDICATED ON THE ARCHITECTURAL DRAWINGS AND IN ACCORDANCE WITH SECTIONS 04 43 13 – STONE MASONRY AND 04 05 19 – MASONRY ANCHORAGE AND REINFORCING.
04 43 13.2 - STONE CAP	PROVIDE BLUESTONE CAP WITH DRIP EDGE AT TOP OF CONCRETE PIER WITH STONE VENEER AT ENTRY GATE. SECURE BLUESTONE CAP TO CONCRETE PIER IN IN ACCORDANCE WITH SECTIONS 04 43 13 – STONE MASONRY AND 04 05 19 – MASONRY ANCHORAGE AND REINFORCING.

DIVISION 5

05 40 00.0 - COLD-FORMED METAL FRAMING	ALL METAL STUD FRAMING TO BE PROVIDED AS WORK OF COLD FORMED METAL FRAMING.
05 40 00.1 - INTERIOR METAL STUDS	PROVIDE MINIMUM 3-5/8-INCH 20 GA GALVANIZED METAL STUD WALL FRAMING SPACED 16-INCHES ON CENTER.
05 40 00.2 - EXTERIOR METAL STUDS	PROVIDE MINIMUM 6-INCH 16 GA GALVANIZED METAL STUD WALL FRAMING SPACED 16-INCHES ON CENTER.
05 40 00.3 - EXTERIOR FURRING	PROVIDE MINIMUM 7/8-INCH GALVANIZED METAL FURRING SPACED MAXIMUM 16-INCHES ON CENTER.
05 44 13.0 - RETROFIT ROOF FRAMING SYSTEM	PROVIDE POST AND BEAM TYPE RETROFIT ROOF FRAMING SYSTEM INCLUDING ALL STEEL FRAMING, CROSS-BRACING, METAL DECKING, AND SUPPORTS AT AREAS INDICATED ON THE DRAWINGS AND IN ACCORDANCE WITH SECTION 05 44 13 – RETROFIT ROOF FRAMING SYSTEM.
05 51 00.0 - METAL STAIR	PROVIDE METAL STAIR WITH HANDRAILS IN ACCORDANCE WITH SECTION 05 51 00 – METAL STAIRS. SEE STRUCTURAL DWGS FOR DETAILS.
05 51 00.1 - ENCLOSED STAIR	PROVIDE STEEL STAIR WITH CONCRETE-FILLED METAL PAN TREADS AND LANDINGS. RISERS SHALL BE METAL. PROVIDE HANDRAILS IN ACCORDANCE WITH NOTE SERIES 05 52 00. PROVIDE NON-SLIP FLOORING AGGREGATE TO CONCRETE SURFACES COORDINATED WITH NOTE 03 35 00.1.
05 51 33.0 - LADDERS	PROVIDE VERTICAL LADDER IN ELEVATOR SERVICE PIT IN ACCORDANCE WITH SECTION 05 51 33 – LADDERS. COORDINATE DEPTH, CLEARANCE AND HEIGHT OF LADDER WITH ELEVATOR REQUIREMENTS.
05 51 33.1 - ROOF LADDER	PROVIDE ALUMINUM ROOF LADDERS IN LOCATIONS SHOWN ON THE ARCHITECTURAL DRAWINGS AND IN ACCORDANCE WITH SECTION 05 51 33 – LADDERS.
05 52 00.0 - GUARDS AND RAILINGS	PROVIDE METAL GUARDS AND RAILINGS AT ALL ENCLOSED STAIRS IN ACCORDANCE WITH SECTION 05 52 00 GUARDS AND RAILINGS. RAILINGS ALONG WALLS SHALL BE PROVIDED WITH WALL MOUNTED SUPPORT BRACKETS. FREE STANDING TYPE SHALL BE PROVIDED WITH WELDED ON BASE MOUNTING FLANGES. INSTALLATION SHALL UTILIZE ADHESIVE ANCHORS. PROVIDE TYPE I GUARDS AND RAILINGS AT PROCESS AREAS, INCLUDING STAIRS B AND C. PROVIDE TYPE II GUARDS AND RAILINGS AT OFFICE AREA, STAIR A.
05 52 00.1 - ALUMINUM RAILING SYSTEM	PROVIDE ALUMINUM RAILING SYSTEMS IN TYPES SHOWN ON CONTRACT DRAWINGS. ROOF RAILING SHALL BE MOUNTED TO STRUCTURAL ROOF DECK WITH STANCHION MOUNT WITH BASE PLATE. INSTALLATION OF STANCHION MOUNT WITH BASE PLATE SHALL UTILIZE ADHESIVE ANCHORS. AT ROOF RAILING POSTS, PROVIDE PVC BASE FLASHING BOOT AS WORK OF 07 54 19. COLOR OF FLASHING BOOT TO MATCH ROOFING MEMBRANE. MOUNT FLASHING BOOT TO RAILING POST TO CREATE WATERTIGHT BARRIER AS WORK OF 07 54 19.
05 52 00.2 - SELF-CLOSING GATE	PROVIDE SELF-CLOSING GATE WITH NO LATCH AT ENCLOSED STAIRS AT LEVEL OF EGRESS TO GRADE AS INDICATED ON THE DRAWINGS. GATE SHALL SWING IN THE DIRECTION OF EGRESS.
05 52 00.3 - GUARDS WITH GATE	PROVIDE GUARDRAIL ENCLOSURE WITH ACCESS GATE AT BOTTOM LEVEL OF ENCLOSED STAIRS. COORDINATE POSITION OF GUARDRAIL ENCLOSURE TO ENSURE 7'-0" MINIMUM CLEAR HEAD CLEARANCE UNDER STAIR.
05 52 16.0 - SEISMIC AND CODE COMPLIANT FRAMING	ALLOW FOR SLIDING CONNECTIONS BETWEEN WORK OF STRUCTURAL STEEL AND METAL FABRICATIONS. REFER TO CODE COMPLIANCE SHEET FOR PERFORMANCE REQUIREMENTS AND CODE COMPLIANCE REQUIREMENTS.

DIVISION 6

06 10 00.0 - TREATED TIMBER AND LUMBER	PROVIDE TREATED WOOD AND LUMBER AGAINST CONCRETE AND ALL EXTERIOR EXPOSED BLOCKING.
06 10 00.1 - WOOD BLOCKING	ALL BLOCKING USED FOR ROOFING, BELOW GRADE, AND IN EXTERIOR WALLS TO BE PRESERVATIVE TREATED LUMBER.
06 41 00.0 - CUSTOM CABINETRY	PROVIDE CUSTOM CABINETRY CONSISTING OF WALL AND BASE CABINETS IN FLUSH OVERLAY DESIGN INCLUDING ALL WORK ASSOCIATED WITH CONTINUOUS COUNTERTOP PER NOTE 06 41 00.1. MATERIALS SHALL BE IN ACCORDANCE WITH SPECIFICIATION SECTION 06 41 10.
06 41 00.1 - QUARTZ COUNTERTOP	PROVIDE QUARTZ COUNTERTOP. MATERIAL SHALL BE 3/4-INCH (20MM) CLASSICO SERIES AS MANUFACTURED BY CAESARSTONE OR APPROVED EQUAL. PROVIDE 26-INCH DEEP COUNTERTOP WITH 1 1/2-INCH NOSING EDGE FOR LENGTH AS INDICATED ON THE CONTRACT DOCUMENTS WITH 8-INCH HIGH BACKSPLASH. PROVIDE 1/8-INCH RADIUS EASED EDGE TOP AND BOTTOM ALONG PERIMETER OF ALL COUNTER TOPS.
06 41 00.2 - QUARTZ WINDOW SILL	PROVIDE QUARTZ WINDOW SILL. MATERIAL SHALL BE 3/4-INCH (20MM) CLASSICO SERIES AS MANUFACTURED BY CAESARSTONE OR APPROVED EQUAL. WINDOW SILL TO OVERHANG FINISHED FACE OF WALL BY 3/4-INCH FOR LENGTH AND DEPTH AS INDICATED ON THE CONTRACT DOCUMENTS. PROVIDE 1/8-INCH RADIUS EASED EDGE TOP AND BOTTOM ALONG EXPOSED FACE OF WINDOW SILL.
06 41 00.3 - FLOATING SHELVES	PROVIDE FLOATING SHELVES WITH CONCEALED BRACKETS IN ACCORDANCE WITH SECTION 06 41 00 – ARCHITECTURAL WOOD CASEWORK.
06 51 00.0 - GRATINGS, TREADS AND PLATFORMS	PROVIDE FRP WITH GRIT ABRASIVE FOR ALL GRATINGS INCLUDING BUT NOT LIMITED TO ALL: STAIR TREADS, STAIR PLATFORMS, AND CONTAINMENT AREAS IN ACCORDANCE WITH SECTION 06 51 00 AND AS SHOWN ON THE STRUCTURAL DRAWINGS. THE COLOR FOR ALL GRATING TREADS, RISERS AND PLATFORMS SHALL BE SHALL BE GRAY.
06 51 00.1 - FIBERGLASS RAILINGS	PROVIDE FIBERGLASS RAILING SYSTEM WITH INTERMEDIATE RAIL AND TOE GUARDS IN ACCORDANCE WITH SECTION 06 51 00 AND AS SHOWN ON THE STRUCTURAL DRAWINGS.

DIVISION 7

07 17 00.0 - BENTONITE WATERPROOFING	PROVIDE SODIUM BENTONITE FILLED GEOTEXTILE SHEET WATERPROOFING MEMBRANE WITH AN INTEGRATED POLYETHYLENE VAPOR BARRIER, SODIUM BENTONITE WATER STOPS, SODIUM BENTONITE CLAY-BASED CONSTRUCTION JOINTS, SEALANTS AND OTHER SYSTEM COMPONENTS AND ACCESSORIES SPECIFIED AND REQUIRED FOR BENTONITE WATERPROOFING TO PERFORM IN A PERMANENTLY WATERPROOF MANNER. PROVIDE COMPLETE TECHNICAL SERVICES AS AVAILABLE FROM THE MANUFACTURER AND ON-SITE TECHNICAL REPRESENTATION BY MANUFACTURER'S TECHNICAL REPRESENTATIVE DURING THE TIME OF DELIVERY, STORAGE AND INSTALLATION OF THE WORK
07 21 00.0 - PERIMETER INSULATION	PROVIDE PERIMETER INSULATION TO ACHIEVE A THERMAL RESISTANCE VALUE OF NO LESS THAN R-10 FROM GRADE TO 10-FEET BELOW GRADE PERIMETER INSULATION AT BASEMENT WALLS AND TO 2-FEET BELOW GRADE PERIMETER INSULATION AT SLAB ON GRADE AFTER CONCRETE FOUNDATION WORK HAS BEEN POURED AND ACCEPTABLE TO ENGINEER. PERIMETER INSULATION SHALL BE FULLY ADHERED TO CONCRETE PRIOR TO BACKFILL.
07 21 00.1 - CAVITY WALL INSULATION	PROVIDE DUAL DENSITY RIGID MINERAL FIBER CAVITY WALL INSULATION TO ACHIEVE A THERMAL RESISTANCE VALUE OF NO LESS THAN R-10.7 CONTINUOUS.
07 21 00.2 - CONCRETE-FACED INSULATION	PROVIDE CONCRETE-FACED (CF) RIGID PERIMETER INSULATION TO ACHIEVE A THERMAL RESISTANCE VALUE OF NO LESS THAN R-10 WHERE ANY PORTION OF THE FOUNDATION IS ABOVE GRADE AND AT LOCATIONS BELOW GRADE TO PROTECT WATERSTOPS AS INDICATED ON STRUCTURAL DRAWINGS. SEAL ALL SEAMS AND JOINTS PER MANUFACTURER'S RECOMMENDATION. PROVIDE MANUFACTURER'S ACCESSORIES INCLUDING BUT NOT LIMITED TO CAP FLASHING, TRIMS, CLIPS, CORNER TRIMS, NON-CORROSIVE FASTENERS, TAPE, AND SEALANT AS WORK OF SECTION 07 21 00.
07 21 00.3 - FIRE SAFING INSULATION	PROVIDE COMPRESSION-FIT, NON-COMBUSTIBLE, LIGHTWEIGHT, SEMI-RIGID MINERAL WOOL BOARD INSULATION THAT PROVIDES FIRE RESISTANCE FOR JOINTS BETWEEN THE PERIMETER EDGE OF FIRE-RESISTANCE-RATED FLOOR AND WALL ASSEMBLIES AND NON-FIRE-RESISTANCE-RATED EXTERIOR CURTAIN WALLS.
07 21 00.4 - CURTAIN WALL INSULATION	PROVIDE NON-COMBUSTIBLE, RIGID, WATER REPELLENT, MINERAL WOOL INSULATION BOARD MECHANICALLY ATTACHED TO HORIZONTAL AND VERTICAL MULLIONS OF EXTERIOR CURTAIN WALL SYSTEM.
07 21 00.5 - THERMAL BATT INSULATION	PROVIDE SEMI-RIGID MINERAL WOOL THERMAL BATT INSULATION TO ACHIEVE A THERMAL RESISTANCE VALUE OF NO LESS THAN R-24 AT ALL EXTERIOR METAL STUD FRAMING.
07 21 00.6 - ACOUSTIC INSULATION	PROVIDE FULL HEIGHT 3-INCH THICK ACOUSTIC BATT INSULATION THROUGHOUT ALL PARTITIONS DESIGNATED AS "ACOUSTIC PARTITION".
07 21 00.7 - HEAD-OF-WALL INSULATION	PROVIDE MINERAL WOOL PREFORMED HEAD-OF-WALL INSULATION WITH SLANTED CONTOUR TO METAL DECK PROFILES. PREFORMED METAL DECK INSULATION SHALL BE INSTALLED CONTINUOUSLY ALONG HEAD-OF-WALL JOINT CONSTRUCTIONS WHERE EXTERIOR METAL STUD WALLS MEET METAL DECK TO ACHIEVE A THERMAL RESISTANCE VALUE OF NO LESS THAN R-3.5.
07 22 16.0 - ROOFING BOARD INSULATION	PROVIDE MINIMUM THICKNESS OF CONTINUOUS UNTAPERED ROOF INSULATION THROUGHOUT ROOF AREA WITH 1/4-INCH PER FOOT TAPERED INSULATION LAID ONTO TOP OF UNTAPERED INSULATION TO ACHIEVE A THERMAL RESISTANCE VALUE OF NO LESS THAN R-30. PROVIDE 1/2-INCH BACK SLOPE AT WALLS TO CREATE POSITIVE DRAINAGE TO THE ROOF DRAINS. INSTALL IN ACCORDANCE WITH MANUFACTURERS REQUIREMENTS OVER VAPOR RETARDER ONTO STRUCTURAL ROOF SYSTEM.
07 22 16.1 - SLOPED ROOFING INSULATION	AT METAL DECK, PROVIDE 1/2-INCH THICK GYPSUM ROOF BOARD OVER METAL DECK FOLLOWED BY SLOPED ROOF INSULATION AND SLOPED ROOF NAILABLE SHEATHING. AT CONCRETE ROOF DECK, PROVIDE SLOPED ROOF INSULATION AND SLOPED ROOF NAILABLE SHEATHING. TOTAL INSULATION THICKNESS TO ACHIEVE A THERMAL RESISTANCE VALUE OF NO LESS THAN R-30 IN ACCORDANCE WITH THE NEW YORK STATE ENERGY CONSERVATION CODE. SLOPED ROOF ASSEMBLY SHALL INCLUDE A STANDING SEAM METAL ROOF SYSTEM IN ACCORDANCE WITH NOTE 07 61 13.0.
07 26 13.0 - WALL SYSTEM VAPOR AND AIR BARRIERS	PROVIDE VAPOR AND AIR BARRIERS THROUGHOUT ALL ABOVE GRADE WALL SURFACES. SEAL WALL SYSTEM VAPOR AND AIR BARRIERS TO ADJOINING TRANSITION MEMBRANES TO CREATE A COMPLETE VAPOR BARRIER ENCLOSURE SYSTEM. APPLY AIR AND VAPOR BARRIER ON INTERIOR SIDE OF CAVITY FOR ALL EXTERIOR CAVITY WALL SYSTEMS. VAPOR BARRIERS SHALL BE INSTALLED PRIOR TO INSTALLATION OF INSULATION AND CAN BE USED AS ADHESIVE TO SECURE INSULATION.
07 42 13.1 - PREFORMED METAL SIDING SYSTEM	PROVIDE PREFORMED METAL SIDING ASSEMBLY SECURED ONTO 1 1/2-INCH GALVANIZED VENTED METAL CHANNEL ATTACHED TO 2 1/2-INCH VERTICAL "Z" SHAPE SUB-GIRTS SPACED 24-INCHES ON CENTER WITH CAVITY WALL INSULATION OVER WALL SYSTEM VAPOR AND AIR BARRIER SECURED TO EXTERIOR MASONRY BACKUP WORK OF SECTION 04 22 23.23. REFER TO NOTES 07 26 13.0 WALL SYSTEM VAPOR AND AIR BARRIERS AND 07 21 00.1 CAVITY WALL INSULATION.
07 42 13.2 - FLAT FACED SOFFIT SYSTEM	PROVIDE FLAT FACED PANEL SOFFIT SYSTEM WITH CONCEALED FASTENERS SET ON SUB-GIRT AND GALVANIZED FURRING SUPPORTS IN ACCORDANCE WITH SECTION 07 41 63 – PREFORMED METAL SIDING.
07 42 13.3 - METAL FASCIA	PROVIDE PRE-FINISHED METAL EDGE FASCIA AS WORK OF 07 42 13.13 PREFORMED METAL SIDING. PROVIDE METAL FASCIA UNITS WITH MITERED WELDED CORNERS, CONCEALED SPLICE PLATES AND JOINT TRIM, RETAINER CLIPS, COMPRESSION PADS, FASTENERS, AND OTHER ACCESSORIES REQUIRED TO MAKE A COMPLETE INSTALLATION, IN ACCORDANCE WITH THE MANUFACTURER'S RECOMMENDATIONS. PRIOR TO THE INSTALLATION OF THE FASCIA, ALLOW FOR AND COORDINATE THE INSTALLATION OF VAPOR BARRIER AND TRANSITION MEMBRANE AS WORK OF SECTION 07 26 13 AND WORK OF 07 21 00.1 CAVITY WALL INSULATION
07 54 19.0 - PVC ROOFING SYSTEM	PROVIDE FLEECE BACK KEE HP PVC FULLY ADHERED MEMBRANE ROOFING SYSTEM THROUGHOUT ALL ROOF AREAS AS INDICATED ON THE ARCHITECTURAL DRAWINGS.PROVIDE PVC MEMBRANE OVER 5/8-INCH PROTECTION BOARD, OVER TAPERED POLYISOCYANURATE INSULATION PITCHED AT 1/4-INCH PER FOOT OVER CONTINUOUS UNTAPERED POLYISOCYANURATE INSULATION OVER VAPOR RETARDER TO ACHIEVE R-30 CONTINUOUS INSULATION SYSTEM. PROVIDE SST COUNTER FLASHING AT ALL VERTICAL PENETRATIONS. VERIFY ALL FIELD CONDITIONS PRIOR TO START OF WORK.
07 54 19.1 - CRICKET	PROVIDE CRICKETS AT ALL ROOF PADS AND ROOF CURBS. CRICKET SLOPE SHALL BE 1/2-INCH PER FOOT.
07 54 19.2 - DRAINAGE CRICKET	PROVIDE 1/2-INCH PER FOOT CRICKET SLOPE TO ROOF DRAINS. HIGH POINT OF DRAINAGE SLOPE SHALL BE 2-INCHES ABOVE LOW POINT OF ROOF.
07 54 19.3 - COVER BOARD	PROVIDE 5/8-INCH THICK GYPSUM-FIBER ROOF BOARD ADHERED TO TAPERED ROOF INSULATION. ROOF COVER BOARD IS TO BE INSTALLED VERTICALLY OVER WALL INSULATION AT ALL WALLS ADJACENT TO FLAT AND SLOPED ROOFS.
07 54 19.4 - ROOF WALKWAY PADS	PROVIDE ROOF WALKWAY PADS TO LEAD FROM ACCESS OPENING, LADDER OR STAIR TO EACH PIECE OF ROOFTOP EQUIPMENT WHETHER OR NOT SHOWN ON ARCHITECTURAL DRAWINGS AND AS PER SECTION 07 54 19.
07 54 19.5 - REINFORCED VAPOR RETARDER	PROVIDE POLYETHYLENE-REINFORCED SELF-SEALING VAPOR RETARDER OVER PRIMED CONCRETE ROOF DECK IN ACCORDANCE WITH SECTION 07 54 19.
07 54 19.6 - GRAVEL STOP FASCIA	PROVIDE GRAVEL STOP FASCIA UNITS WITH MITERED WELDED CORNERS, CONCEALED SPLICE PLATES AND JOINT TRIM, RETAINER CLIPS, COMPRESSION PADS, FASTENERS, AND OTHER ACCESSORIES REQUIRED TO MAKE A COMPLETE INSTALLATION, IN ACCORDANCE WITH THE MANUFACTURER'S RECOMMENDATIONS. COLOR AND FINISH TO MATCH SIDING AS INDICATED ON THE ARCHITECTURAL DRAWINGS IN ACCORDANCE WITH SECTION 07 42 13.3 PREFORMED METAL SIDING SYSTEM. PRIOR TO THE INSTALLATION OF THE FASCIA, ALLOW FOR AND COORDINATE THE INSTALLATION OF GUARDRAIL PIPE SLEEVE WORK OF SECTION 05 52 00, VAPOR BARRIER AND TRANSITION MEMBRANE AS WORK OF SECTION 07 26 13.
07 54 19.7 - ROOF SYSTEM EXPANSION JOINT	PROVIDE 1-INCH CLEAR EXPANSION JOINT BETWEEN BUILDING FOR FULL EXTENT OF ROOFING SYSTEM INCLUDING BUT NOT LIMITED TO ROOF MEMBRANE SURFACE HORIZONTAL AND VERTICAL CONDITIONS UP TO AND INCLUDING THE FASCIA CONDITION. SEAL TRANSITION TO WALL CONDITION AT EXPANSION JOINT.
07 54 19.8 - ROOF RAILING AND LADDER POSTS PENETRATIONS	COORDINATE VERTICAL PENETRATION OF ROOF TOP RAILINGS AND LADDERS WITH THE REQUIREMENTS OF SECTION 07 54 19 – PVC ROOFING SYSTEM. REFER TO NOTES 05 52 00.1 - ALUMINUM RAILING SYSTEM AND 05 51 33.1 - ALUMINUM LADDERS.
07 54 19.9 - METAL ROOF NAILER	PROVIDE PREMANUFACTURED METAL ROOF NAILER ALTERNATIVE TO WOOD BLOCKING COMPLYING WITH TESTING REQUIREMENTS OF SECTION 07 54 19

07 71 00.1 - GUTTERS AND DOWNSPOUTS	PROVIDE 6-INCH DIAMETER LEADER WITH 8-INCH BY 8-INCH GUTTER WITH GUTTER DRAIN, END CAPS, STRAINER AND GUTTER GUARD FOR ALL LEADER AND DOWNSPOUT ASSEMBLIES. REFER TO CIVIL DRAWINGS FOR DOWNSPOUT TIE-IN LOCATIONS AND DETAIL.
07 71 00.2 - SPLASH BLOCK	PROVIDE SPLASH BLOCK WHERE LEADERS TERMINATE AT FLAT ROOF AND AT VEGETATED AREAS. REFER TO SECTION 07 71 00 – GUTTERS AND DOWNSPOUTS.
07 84 00.0 - FIRESTOPPING	INSTALL SAFING INSULATION AND FIRE STOP SYSTEMS TO PROVIDE A CONTINUOUS FIRE RATED FIRE BARRIER IN AREAS SHOWN AND AT THE PERIMETER OF ALL FIRE-RATED PARTITIONS, SLABS, INTERSECTION OF FIRE RATED ASSEMBLIES, JOINTS AND POKE THROUGH FLOOR AND WALL PENETRATIONS TO MAINTAIN THE CONTINUITY OF FIRE-RATED CONSTRUCTION WHETHER OR NOT SHOWN.
07 84 00.1 - FIRESTOPPING AT MASONRY WALLS	WHERE UNIT MASONRY WALLS OR PARTITIONS ARE DESIGNATED AS FIRE RATED PROVIDE UL ASSEMBLY CONSISTING OF FIRE RATED SEALANT ASSEMBLY AT BOTH SIDES OF PARTITION BOTH HORIZONTAL AND VERTICAL. FILL ALL VOIDS WITH FIRE SAFING INSULATION. REFER TO ARCHITECTURAL DRAWINGS FOR GENERAL NOTES FOR FIRE PROTECTION CONSTRUCTION REQUIREMENTS FOR FIRE RATINGS. FOR NON-FIRE RATED UNIT MASONRY WALL OR PARTITIONS PROVIDE COMPRESSIBLE FILLER WITHIN VOIDS WITH BOND BREAKER AND SEALANT AT BOTH SIDES OF PARTITION AND ALSO BOTH VERTICAL AND HORIZONTAL AS THE PARTITION MEETS THE BUILDING STRUCTURE OR ADJOINING PARTITIONS. PROVIDE THE SAME ASSEMBLY FOR CONTROL JOINTS IN PARTITIONS.
07 90 00.0 - BACKER SEAL	PROVIDE BACKER SEAL AT EXTERIOR FACE GFB IN VERTICAL JOINTS AND HORIZONTAL JOINT BELOW STEEL IN MASONRY DESIGNATED WITH A CONTROL JOINT. RECESS BACKER SEAL TO RECEIVE SEALANT.
07 90 00.1 - ENTRY PANELS	PROVIDE ENTRY PANELS WITH UV RESISTANT WATERPROOFING SYSTEMS AT ALL PENETRATIONS IN INTERIOR AND EXTERIOR WALLS ON BOTH SIDES. FOR FIRE RATED ASSEMBLIES, PROVIDE COMPLETE FIRE STOPPING ASSEMBLY PRIOR TO INSTALLATION OF ENTRY PANEL. PROVIDE COMPLETE ADDITIONAL SEALANT SEAL AT ROUND PENETRATIONS AND PERIMETER OF ENTRY PANELS.
07 95 13.0 - EXTERIOR EXPANSION JOINTS	PROVIDE EXPANSION JOINT BETWEEN FACADE MATERIALS. CLEAN AND PREPARE SURFACES IN ACCORDANCE WITH MANUFACTURER'S REQUIREMENTS. PROVIDE ALL TRANSITION FROM UNDERSIDE OF SOFFIT AND FASCIA TO FOUNDATION WALL CONDITION FOR FULL HEIGHT.
07 95 13.1 - INTERIOR EXPANSION JOINT AT WALL AND CEILING	PROVIDE FIRE RATED EXPANSION JOINT FOR WALL AND CEILING CONDITION AT OPENING. CLEAN AND PREPARE SURFACES IN ACCORDANCE WITH MANUFACTURER'S PROVIDE ALL TRANSITION FROM FLOOR TO WALL AND CEILING FOR FULL HEIGHT OF OPENING.
07 95 13.2 - INTERIOR EXPANSION JOINT AT FLOOR	PROVIDE FIRE RATED EXPANSION JOINT WITH ALUMINUM COVER FOR FLOOR CONDITION AT OPENING. CLEAN AND PREPARE SURFACES IN ACCORDANCE WITH MANUFACTURER'S. PROVIDE ALL TRANSITION FROM FLOOR TO WALL FOR FULL CONDITION OF OPENING.
07 95 13.3 - EXPANSION JOINT AT ROOF	PROVIDE EXPANSION JOINT COMPRESSIBLE FILLER AT ROOF SLAB PRIOR TO THE INSTALLATION OF JOINT COVER WORK OF 07 54 19.0 PVC ROOFING SYSTEM AND 07 61 13.0 STANDING SEAM METAL ROOFING.

DIVISION 8

08 11 16.0 - ALUMINUM DOORS AND FRAMES	PROVIDE ALUMINUM DOORS AND FRAMES AS INDICATED ON THE ARCHITECTURAL DRAWINGS. HARDWARE TO BE INSTALLED IN ACCORDANCE WITH 08 71 01- FINISH DOOR HARDWARE.
08 15 00.0 - FRP DOORS AND FRAMES	PROVIDE FRP DOORS WITH FRP FRAMES AS INDICATED ON THE ARCHITECTURAL DRAWINGS. HARDWARE TO BE INSTALLED IN ACCORDANCE WITH 08 71 00- FINISH DOOR HARDWARE.
08 33 23.0 - OVERHEAD COILING DOORS	PROVIDE MOTOR OPERATED OVERHEAD COILING DOORS WITH INSULATED ALUMINUM CURTAIN SLATS, BOTTOM BAR WEATHERSTRIPPING, GALVANIZED STRUCTURAL STEEL GUIDES AND GALVANIZED DOOR HOODS.
08 41 13.0 - ALUMINUM-FRAMED ENTRANCES AND STOREFRONT	PROVIDE THERMALLY BROKEN FRONT-GLAZED ALUMINUM STOREFRONT SYSTEM WITH INSULATED GLASS PER NOTE 08 81 03.0 AND AS SHOWN ON THE ARCHITECTURAL DRAWINGS.
08 41 13.1 - INTERIOR STOREFRONT AND ENTRANCES	PROVIDE CENTER-GLAZED ALUMINUM-FRAMED ENTRANCES AND STOREFRONT SYSTEM WITH TEMPERED GLASS AT INTERIOR WINDOWS AND GLAZED WALL SYSTEMS. REFER TO SECTION 08 41 13 – ALUMINUM-FRAMED ENTRANCES AND STOREFRONT, 08 81 03 – GLASS, PLASTIC AND GLAZING, AND 08 71 01 – FINISH DOOR HARDWARE.
08 44 13.0 - GLAZED ALUMINUM CURTAIN WALL SYSTEM	PROVIDE THERMALLY BROKEN FRONT-GLAZED ALUMINUM CURTAIN WALL SYSTEM WITH INSULATED GLASS PER NOTE 08 81 03.0 AND AS SHOWN ON THE ARCHITECTURAL DRAWINGS. ALL DOORS AND ASSOCIATED FRAMING SECURED TO GLAZED ALUMINUM CURTAIN WALL SYSTEM TO BE INCLUDED AS WORK OF 08 41 13 - ALUMINUM-FRAMED ENTRANCES AND STOREFRONT DOORS AND ALL FRAMING COLOR TO MATCH GLAZED ALUMINUM CURTAIN WALL SYSTEM FRAME COLOR
08 45 23.0 - TRANSLUCENT WALL SYSTEMS	PROVIDE TRANSLUCENT THERMALLY BROKEN AND INSULATED WALL SYSTEM COMPRISED OF STRUCTURAL COMPOSITE SANDWICH PANELS SET IN ALUMINUM FRAMES. TRANSLUCENT WALL SYSTEM SHALL BE SECURED TO ALLOW FOR SEISMIC MOVEMENT TO EXTERIOR WALL SYSTEM. PROVIDE FLASHING IN ACCORDANCE WITH ARCHITECTURAL NOTES 07 60 00.0 AND 07 60 00.3.
08 71 01.0 - FINISH DOOR HARDWARE	PROVIDE FINISH DOOR HARDWARE IN ACCORDANCE WITH SECTION 08 71 01.
08 71 01.1 - SECURITY DOOR HARDWARE	PROVIDE SECURITY COMPLIANT ELECTRONIC LOCKSETS, POWER TRANSFER ACCESSORIES AT HINGES WITH INTERCONNECTION TO SECURITY SYSTEM.
08 81 03.0 - INSULATED GLAZING	PROVIDE INSULATED GLASS AT ALUMINUM CURTAIN WALL SYSTEMS AND ALUMINUM ENTRANCES AND STOREFRONT SYSTEMS AS INDICATED ON THE ARCHITECTURAL DRAWINGS.
08 81 03.1 - INSULATED SPANDREL	PROVIDE INSULATED SPANDREL PANEL AT ALUMINUM CURTAIN WALL SYSTEMS AS INDICATED ON THE ARCHITECTURAL DRAWINGS.
08 81 03.2 - DOOR GLAZING	PROVIDE LAMINATED SAFETY GLASS AT ALL DOORS AND SIDELIGHTS INCLUDING FIRE RATED ASSEMBLIES.
08 81 03.3 - FIRE RATED GLAZING	PROVIDE FIRE RATED GLAZING IN FIRE RATED ASSEMBLIES FOR WORK OF 08 15 00 – FRP DOORS AND FRAMES.
08 91 20.0 - FIXED UNIT LOUVERS	PROVIDE FIXED UNIT LOUVERS IN SIZES AS INDICATED BY LOUVER SCHEDULE.
08 91 20.1 - FIXED LOUVER SIZES	THE LOUVER SCHEDULE INDICATES DIMENSIONAL SIZE OF LOUVERS FOR OPENING IN WALL SYSTEMS. REFER TO HVAC LOUVER OPENINGS FOR THE SIZE OF THE OPENING REQUIRED FOR VENTILATION. BLANK OFF PANELS SHALL PROVIDE CLOSURE OF THE AREA REMAINING BETWEEN THE LOUVER SIZE AND THE SIZE OF OPENING FOR VENTILATION REQUIREMENTS SHOWN ON DRAWINGS.
08 91 20.2 - LOUVER SUPPORT	LOUVERS, DAMPERS, AND TRIM SECTIONS SHALL BE SUPPORTED BY AND INTEGRAL TO THE STRUCTURAL PERFORMANCE REQUIREMENTS OF THE LOUVER SYSTEM INCLUDING ACCESSORY BRACKET SUPPORT OF DAMPERS (INCLUDING MOTORIZED TYPE) AND METHOD OF ATTACHMENT TO INTERMEDIATE SUPPORTS AS PART OF THE WORK OF SECTION 23 31 13. ALL INTERMEDIATE STRUCTURAL SUPPORT AND COMPONENTS (INCLUDING ANY MISCELLANEOUS SUPPORT WORK FROM FOUNDATION TO UNDERSIDE OF BEAM) REQUIRED TO PROVIDE STRUCTURAL SUPPORT FOR THE LOUVERS, DAMPERS, AND TRIMS SHALL BE PROVIDED AS WORK OF SECTION 05 14 00 WITHOUT ADDITIONAL COST TO THE OWNER.
08 91 20.3 - SEALANT AT ALL LOUVERS	PROVIDE SEALANT AROUND PERIMETER OF ALL LOUVERS. REFER TO SECTION 07 91 00 FOR JOINT SEALANTS.

DIVISION 9

09 29 00.0 - GYPSUM BOARD SYSTEM	PROVIDE INTERIOR GYPSUM BOARD PANEL AS SPECIFIED OVER GALVANIZED COLD FORMED STEEL STUDS TO RUN FROM FLOOR SLAB TO UNDERSIDE OF STRUCTURE ABOVE.
09 29 00.1 - SHEET METAL GROUNDS	PROVIDE A MINIMUM OF 12-INCH HIGH BY 20 GAUGE SHEET METAL REINFORCING BEHIND ALL TOILET ACCESSORIES WORK OF 10 28 10.
09 29 00.2 - PARTITION TYPES	REFER TO ARCHITECTURAL DRAWINGS FOR PARTITION TYPE INDICATED WITH PARTITION TAGS. IN THE EVENT THAT A PARTITION IS NOT IDENTIFIED THE CONTRACT SHALL PROVIDE A 1 HOUR FIRED RATED PARTITION WITH 5/8-INCH THICK HIGH ABUSE PAPER LESS GYPSUM BOARD PANELS BOTH SIDES OF 3 5/8-INCH METAL STUD AT 16-INSHES ON CENTER FOR FULL HEIGHT TO UNDERSIDE OF STRUCTURE ABOVE. REFER TO SECTIONS 05 40 00 COLD-FORMED METAL FRAMING AND 09 29 00 GYPSUM DRYWALL SYSTEMS.
09 29 00.3 - INTERIOR GYPSUM PANELS	PROVIDE HIGH ABUSE PAPERLESS GYPSUM PANELS OVER ALL INTERIOR WALL PARTITIONS WITH THE EXCEPT AS NOTED OTHERWISE. PROVIDE MOISTURE RESISTANT PAPERLESS GYPSUM BOARD PANELS AT ALL WALLS WITHIN BATHROOMS, LOCKER ROOMS, SHOWERS AND TILED SURFACES.
09 29 00.4 - ACOUSTIC PARTITION	PROVIDE ACOUSTIC PARTITIONS AT ALL INTERIOR METAL FRAMING WORK OF 05 40 00.1INTERIOR METAL STUDS. SEALANT SHALL BE ADDED ON BOTH SIDES OF GYPSUM PANELS AT 1/2-INCH JOINTS AT BASE AND TOP OF PARTITION. PARTITION ASSEMBLY SHALL YIELD AN STC (SOUND TRANSMISSION CLASS) OF 52. USING 5/8-INCH THICK FULL HEIGHT PAPERLESS GYPSUM PANELS ON BOTH SIDES OF 3 5/8-INCH METAL STUD AT 16-INCHES ON CENTER FOR FULL HEIGHT TO UNDERSIDE OF STRUCTURE ABOVE. SEAL ALL PENETRATIONS IN PARTITION ASSEMBLY IN ACCORDANCE WITH MANUFACTURES REQUIREMENTS TO MAINTAIN THE DESIGNATED STC RATING. REFER TO NOTE 07 21 00.6 ACOUSTIC INSULATION.
09 29 00.5 - SUSPENDED PARTITION	PROVIDE SUSPENDED PARTITION FROM 1-INCHES ABOVE WORK ASSOCIATED WITH NOTE 08 41 13.1 INTERIOR STOREFRONT AND ENTRANCES TO UNDERSIDE OF STRUCTURE ABOVE. SUSPENDED PARTITION SHALL CONSIST OF 3 5/8-INCH METAL STUDS AT 16-INCHES ON CENTER WITH 5/8-INCH HIGH ABUSE GYPSUM BOARD PANEL SHEATHING AND INSULATION IN ACCORDANCE WITH NOTE 09 29 00.4.
09 29 00.6 - FINISHES AT SUSPENDED CEILING	ALL WALL FINISHES ADJACENT TO SUSPENDED CEILING TO EXTEND TO FULL HEIGHT.
09 29 00.7 - GYPSUM BOARD CEILING	PROVIDE WATER RESISTANT GYPSUM BOARD PANEL AS SPECIFIED OVER GALV COLD FORMED STEEL FRAMING TO RUN BETWEEN MASONRY WALLS. PROVIDE WATER RESISTANT GYPSUM BOARD SOFFIT OVER GALV COLD FORMED STEEL FRAMING TO RUN FROM CEILING TO UNDERSIDE OF STRUCTURE ABOVE.
09 29 00.8 - PARTITION GAP CLOSURE	PROVIDE SPRING LOADED EXTRUDED ALUMINUM PARTITION GAP CLOSURE FOR ALL VERTICAL JUNCTURES OF PARTITIONS AND WINDOW WALLS. INSULATED ASSEMBLY SHALL ACHIEVE AN STC 56 RATING. PROVIDE EXTUDED ALUMINUM END CAP AT GYPSUM BOARD SYSTEM. LENGTHS AND SIZE TO FIT SPECIFIED OPENINGS. FINISH TO MATCH WORK OF 08 44 13.0 GLAZED ALUMINUM CURTAIN WALL SYSTEM.
09 29 00.9 - EXTERIOR GYPSUM SYSTEM	PROVIDE EXTERIOR GRADE GYPSUM BOARD PANELS OVER GALVANIZED COLD FORMED STEEL STUDS AS INDICATED ON THE DRAWINGS AND IN ACCORDANCE WITH NOTE 05 40 00.2 – EXTERIOR METAL STUDS . REFER TO SECTIONS 09 29 00 GYPSUM DRYWALL SYSTEM AND 05 40 00 COLD-FORMED METAL FRAMING.
09 31 13.0 - PORCELAIN WALL TILE	WALL TILE SHALL BE 12" x 24" PORCELAIN TILE IN VERTICAL RUNNING BOND PATTERN WITH 3/16-INCH JOINTS. METAL EDGE TRIM SHALL BE PROVIDED TO FINISH WALLS WHERE INDICATED AND AT ALL CORNER CONDITIONS.
09 31 13.1 - PORCELAIN FLOOR TILE	FLOOR TILE SHALL BE 12" x 24" IN A RUNNING BOND PATTERN WITH 3/16-INCH JOINTS. COVE BASE TO MATCH THE FLOOR TILE SHALL BE PROVIDED TO FINISH THE FLOOR WHERE REQUIRED AT ALL BASES AND FINISHED OPENING LOCATIONS. PROVIDE METAL CAP EDGE AT WAINSCOT CONDITIONS AND COVE BASE LOCATIONS WITHOUT WALL TILE.
09 31 13.2 - METAL EDGE PROTECTION	PROVIDE PROFILED METAL EDGE PROTECTION AT PORCELAIN TILE EDGES INCLUDING BUT NOT LIMITED TO FLOORING TRANSITIONS, TILED END CAPS, TILED CORNERS, TILED WALL CAPS AND WHERE INDICATED ON THE ARCHITECTURAL DRAWINGS IN ACCORDANCE WITH SECTION 09 31 13.
09 51 01.0 - ACOUSTICAL PANEL CEILING	PROVIDE 24-INCH SQUARE ACOUSTICAL PANEL CEILING IN 15/16-INCH CEILING GRID. PROVIDE ALL NECESSARY ACCESSORIES TO MOUNT ALL CEILING LOCATED FIXTURES WITHIN THE CEILING ASSEMBLY.
09 65 00.0 - RESILIENT FLOORING	
09 91 00.0 - ROOF TOP EQUIPMENT	PAINT ALL EXPOSED ROOF TOP EQUIPMENT IN ACCORDANCE WITH DETAILED SPECIFICATION 09 91 00 - PAINTING.
09 91 00.1 - EXTERIOR PAINTING	PAINT ALL EXTERIOR STEEL INCLUDING BUT NOT LIMITED TO BUILDING STEEL AND CANOPY WORK CONNECTED TO THE BUILDING STRUCTURE INCLUDE ALL ASSOCIATED HANGERS AND SUPPORTS. PREPARE ALL GALVANIZED MATERIALS FOR PAINT FINISH.
09 91 00.2 - PAINTING	PROVIDE PAINT FINISH THROUGHOUT ALL EXPOSED INTERIOR FERROUS METALS AND GYPSUM BOARD WALLS AND CEILINGS. REFER TO SECTION 09 91 00 FOR PAINTING SCHEDULE FOR ALL OTHER AREAS.
09 91 00.3 - ADJACENT ROOM FINISHES	IF A ROOM OR SPACE DOES NOT HAVE ROOM NUMBER OR SCHEDULED FINISH THE CONTRACTOR SHALL PROVIDE THE FINISH DESIGNATED BY THE ADJOINING ROOM OR SPACE WITH AN ASSIGNED FINISH AS DIRECTED BY THE ENGINEER.
09 97 00.0 - CR-CT INTERIOR	PROVIDE CHEMICAL-RESISTANT COATINGS IN ACCORDANCE WITH SECTION 09 97 00 CHEMICAL-RESISTANT COATINGS THROUGHOUT BUILDING HORIZONTAL AND VERTICAL SURFACE SHALL HAVE A VAPOR BARRIER INTEGRAL TO THE CONCRETE TOPPING IN CONTAINMENT AREAS. VERTICAL SURFACES SHALL BE PROTECTED TO THE UNDERSIDE OF GRATING AND CONTAINMENT WALL OR 8-INCH HIGH IN AREAS WHERE CONTAINMENT AREA IS NOT INDICATED AS SUCH. CHEMICAL-RESISTANT COATINGS SHALL RETURN INTO A CONTINUOUS 1/8-INCH SLOT IN AREAS OF CONTAINMENT.
09 97 00.1 - CR-CT EXTERIOR	PROVIDE CHEMICAL-RESISTANT COATINGS IN ACCORDANCE WITH SECTION 09 97 00 CONCRETE TOPPING THROUGHOUT HORIZONTAL AND VERTICAL SURFACE AT CONTAINMENT AREAS AND CHEMICAL FILL STATIONS. CR-CT EXTERIOR SHALL REQUIRE A VAPOR BARRIER. A UV PROTECTANT FINAL COATING SHALL BE APPLIED TO THE CONCRETE TOPPING AS SPECIFIED
09 97 00.2 - ANCHORS IN CONCRETE TOPPING	PRIOR TO THE INSTALLATION OF GRATING SUPPORT LEGS AS WORK OF 06 51 00 AND WORK OF DIVISION 15, ALL ANCHORS SHALL BE SEALED TO CONCRETE TOPPING AS WORK OF 09 61 14 CONCRETE FLOOR TOPPINGS.
09 97 00.3 - CR-CT 1/8-INCH SQUARE REVEAL	REFER TO NOTE 09 97 00.1 FOR CHEMICAL RESISTANT CONCRETE TOPPING FOR EXTERIOR CONCRETE CONTAINMENT AREA. SUBSTRATE PREPARATION SHALL BE WORK OF SECTION 09 97 00. PROVIDE CONTINUOUS 1/8-INCH SQUARE REVEAL AT ALL TERMINATIONS OF CONCRETE TOPPINGS AS WORK OF 09 97 00.

DIVISION 10

10 14 01.0 - IDENTIFYING DEVICES	PROVIDE IDENTIFYING SIGNS FOR ALL DOORS AND ROOMS WARNING SIGNS, SAFETY SIGNS BUILDING SIGN AND SITE SIGNAGE AS INDICATED ON ARCHITECTURAL DRAWINGS AND SECTION 10 14 01.
10 14 01.1 - ENTRANCE PLAQUE	PROVIDE PROJECTED STUD MOUNTED ENTRANCE PLAQUE SECURED TO INTERIOR WALL IN ACCORDANCE WITH SECTION 10 14 01 – IDENTIFYING DEVICES.
10 21 13.13.0 - METAL TOILET COMPARTMENTS	PROVIDE GREENGUARD CERTIFIED STAINLESS-STEEL SUSPENDED TOILET COMPARTMENTS AND SCREENS IN ACCORDANCE WITH SECTION 10 21 13.13 – METAL TOILET COMPARTMENTS. REFER TO NOTE 10 21 13.13.1 FOR SUPPORT.
10 21 13.13.1 - TOILET PARTITION SUPPORT	PROVIDE CEILING SUSPENDED TOILET PARTITIONS SUPPORT USING CONTINUOUS MC8X 21.4 STEEL CHANNELS HUNG FROM STRUCTURE ABOVE AT A MAXIMUM OF 4-FEET ON CENTER USING 1/4-INCH DIAMETER THREADED RODS. CROSS BRACE STEEL CHANNELS WITH 2"X 2" X 3/16" STEEL ANGLES TO COMPLY WITH SEISMIC CODE REQUIREMENTS AS INDICATED ON THE STRUCTURAL DRAWING. COORDINATE WORK FOR LOCATION AND HOLES SIZES WITH WORK OF AND 10 21 13.13 – METAL TOILET COMPARTMENTS AND SCREENS
10 23 13.0 - GLASS PARTITION SYSTEMS	
10 28 00.0 - TOILET ACCESSORIES	PROVIDE ADA COMPLIANT TOILET ACCESSORIES IN LOCATIONS SHOWN ON ARCHITECTURAL DRAWINGS. PROVDE CONCEALED INSERTS AND ANCHORAGE AS NECESSARY FOR MOUNTING OF TOILET ACCESSORIES IN ACCORDANCE WITH SECTION 10 28 10. RECESSED MOUNT TOILET ACCESSORIES TO BE COORDINATED WITH WORK OF 09 29 00.
10 28 00.1 - SHOWER CURTAIN	PROVIDE HOOK LESS SHOWER CURTAIN AT EACH SHOWER ENCLOSURE.
10 28 00.2 - CLOTHES HOOK UNIT	WALL MOUNTED STAINLESS-STEEL HOOK UNIT CONSISTING OF 18-INCH-LONG MOUNTING PLATE WITH THREE (3) SECURED HOOKS.
10 28 00.3 - ELECTRIC HAND DRYER	PROVIDE ELECTRIC HAND DRYERS WHERE INDICATED ON THE ARCHTIECTURAL DRAWINGS IN ACCORDANCE WITH SECTION 10 28 00 – TOILET AND BATH ACCESSORIES. COORDINATE INSTALLATION OF ELECTRIC HAND DRYERS WITH ELECTRICAL REQUIREMENTS
10 44 16.0 - FIRE EXTINGUISHERS	PROVIDE WALL MOUNTED "DC" TYPE FIRE EXTINGUISHER IN MECHANICAL ROOMS, HVAC ROOMS AND PROCESS AREAS. PROVIDE "CO2" TYPE FOR ELECTRICAL ROOM AND CONTROL/ELECTRICAL INSTRUMENTATION ROOM UNLESS OTHERWISE NOTED. ALLOW FOR ONE FIRE EXTINGUISHER PER EVERY 70-FEET OF TRAVEL DISTANCE.
10 50 00.0 - LOCKERS	PROVIDE 18-INCH-DEEP LOCKERS MOUNTED ON LOCKER BASE IN ALTERNATING WIDTHS OF 15-INCHES WIDE. PROVIDE ALL FILLER PANELS TO COMPLETE A CONTINUOUS ATTACHMENT OF 90 DEGREE CORNER AND FINISHED EXPOSED SIDE PANELS.
10 50 00.1 - H/C BENCH	PROVIDE 42-WIDE BY 24-INCHES DEEP H/C BENCH, WORK OF SECTION 10 50 00.

DIVISION 12

12 24 13.0 - ROLLER WINDOW SHADES	PROVIDE MECHANICAL SHADE FOR EXTENT OF ALL GLAZED OPENINGS AT OFFICES AND CONFERENCE ROOM.
12 35 53.0 - LABORATORY CASEWORK	PROVIDE METAL LABORATORY FURNITURE, INCLUDING BASE AND WALL CABINETS WITH END AND FILLER PANELS; SERVICE SHELVES, LEDGES AND DECKS; EPOXY RESIN TOPS AND BACKSPLASHES, SINK BASINS, SERVICE FIXTURES AS SHOWN ON THE CONTRACT DRAWINGS AND IN ACCORDANCE WITH SECTION 12 35 53.13. ALLOW FOR CONTINUOUS STEEL LABORATORY CABINETRY TO RUN THE PERIMETER OF THE ROOM. COORDINATE INSTALLATION WITH PLUMBING AND ELECTRICAL CONTRACTORS.
12 35 53.1 - FULL HEIGHT CABINET	PROVIDE FULL HEIGHT METAL STORAGE CABINET 36-INCHES WIDE BY 16-INCHES DEEP BY 84-INCHES HIGH WITH FIVE (5) SHELVES IN ACCORDANCE WITH SECTION 12 35 53.
12 51 00.0 - CONTROL ROOM FURNITURE	PROVIDE DOUBLE PEDESTAL RECTANGULAR AND CORNER DESKS AS INDICATED ON ARCHITECTURAL DRAWINGS AND IN ACCORDANCE WITH SECTION 12 51 00 – OFFICE FURNITURE.
12 51 00.1 - WORKSTATION	PROVIDE FIXED WORKSTATIONS CONSISTING OF DESKS WITH RETURNS, PRIVACY PANELS, MOBILE PEDESTAL CABINET, LATERAL FILE CABINET, AND INTEGRATED ACCESSORIES IN ACCORDANCE WITH SECTION 12 51 00 – OFFICE FURNITURE. REFER TO NOTES 12 51 00.3 - MOBILE PEDESTAL CABINET AND 12 51 00.4 - LATERAL FILE CABINET.
12 51 00.2 - RECEPTION	PROVIDE RECEPTION WORKSTATION CONSISTING OF DESK WITH RETURN, MOBILE PEDESTAL CABINET, LATERAL FILE CABINET, AND INTEGRATED ACCESSORIES IN ACCORDANCE WITH SECTION 12 51 00 – OFFICE FURNITURE. REFER TO NOTES 12 51 00.3 - MOBILE PEDESTAL CABINET AND 12 51 00.4 - LATERAL FILE CABINET.
12 51 00.3 - MOBILE PEDESTAL CABINET	PROVIDE MOBILE PEDESTAL FILE CABINET WITH ONE BOX AND ONE FILE DRAWER IN ACCORDANCE WITH SECTION 12 51 00 – OFFICE FURNITURE.
12 51 00.4 - LATERAL FILE CABINET	PROVIDE LATERAL FILE CABINET WITH TWO FILE DRAWERS AS INDICATED ON ARCHITECTURAL DRAWINGS AND IN ACCORDANCE WITH SECTION 12 51 00 – OFFICE FURNITURE
12 51 00.5 - SWING DOOR CABINET	PROVIDE SWING DOOR CABINET WITH ONE SHELF AS INDICATED ON ARCHITECTURAL DRAWINGS AND IN ACCORDANCE WITH SECTION 12 51 00 – OFFICE FURNITURE.
12 51 00.6 - OPEN SHELF CABINET	PROVIDE OPEN SHELF CABINET AS INDICATED ON ARCHITECTURAL DRAWINGS AND IN ACCORDANCE WITH SECTION 12 51 00 – OFFICE FURNITURE.
12 51 00.7 - HIGH LATERAL FILE	PROVIDE HIGH LATERAL FILE CABINET WITH FIVE FILE DRAWERS AS INDICATED ON ARCHITECTURAL DRAWINGS AND IN ACCORDANCE WITH SECTION 12 51 00 – OFFICE FURNITURE.
12 51 00.8 - EXECUTIVE DESK	PROVIDE EXECUTIVE DESK WITH DOUBLE PEDESTAL AND PRIVACY PANEL AS INDICATED ON ARCHITECTURAL DRAWINGS AND IN ACCORDANCE WITH SECTION 12 51 00 – OFFICE FURNITURE.
12 51 00.9 - CREDENZA	PROVIDE CREDENZA WITH WORKTOP OVER WORK OF NOTES 12 51 00.4 LATERAL FILE CABINET, 12 51 00.5 SWING DOOR CABINET, AND 12 51 00.5 OPEN SHELF CABINET. REFER TO SECTION 12 51 00 – OFFICE FURNITURE.
12 51 00.10 - WORK TABLE	PROVIDE 48-INCH DIAMETER WORK TABLE IN CHIEF'S OFFICE AS INDICATED ON ARCHITECTURAL DRAWINGS AND IN ACCORDANCE WITH SECTION 12 51 00 – OFFICE FURNITURE.
12 51 00.11 - DESK CHAIR	PROVIDE GUEST CHAIRS IN CHIEF'S OFFICE AT WORK OF NOTE 12 51 00.10 – WORK TABLE IN ACCORDANCE WITH SECTION 12 51 00 – OFFICE FURNITURE.
12 51 00.12 - GUEST CHAIR	PROVIDE GUEST CHAIRS IN CHIEF'S OFFICE AT WORK OF NOTE 12 51 00.10 – WORK TABLE IN ACCORDANCE WITH SECTION 12 51 00 – OFFICE FURNITURE.
12 51 00.13 - CONTROL ROOM CHAIR	PROVIDE FULLY ADJUSTABLE WORK CHAIRS WITH HEADRESTS AT WORK OF NOTE 12 51 00.0 - CONTROL ROOM FURNITURE IN ACCORDANCE WITH SECTION 12 51 00 – OFFICE FURNITURE.
12 51 00.14 - COUNTER-HEIGHT TABLE	PROVIDE 30-INCH WIDE BY 72-INCH LONG COUNTER-HEIGHT TABLE IN OPEN OFFICE AS INDICATED ON ARCHITECTURAL DRAWINGS AND IN ACCORDANCE WITH SECTION 12 51 00 – OFFICE FURNITURE.
12 51 00.15 - COUNTER-HEIGHT STOOL	PROVIDE COUNTER-HEIGHT STOOLS AT WORK OF NOTE 12 51 00.14 - COUNTER-HEIGHT TABLE IN ACCORDANCE WITH SECTION 12 51 00 – OFFICE FURNITURE.
12 51 00.16 - CONFERENCE TABLE	PROVIDE 48-INCH WIDE BY 144-LONG CONFERENCE TABLE IN ACCORDANCE WITH SECTION 12 51 00 – OFFICE FURNITURE.
12 51 00.17 - CONFERENCE ROOM CHAIRS	PROVIDE FULLY ADJUSTABLE UPHOLSTERED WORK CHAIRS AT WORK OF NOTE 12 51 00.16 - CONFERENCE ROOM TABLE IN ACCORDANCE WITH SECTION 12 51 00 – OFFICE FURNITURE.
12 51 00.18 - WHITEBOARD	PROVIDE 47-INCH HIGH BY 72-INCH LONG WALL-MOUNTED WHITEBOARD AS INDICATED ON ARCHITECTURAL DRAWINGS AND IN ACCORDANCE WITH SECTION 12 51 00 – OFFICE FURNITURE.
12 51 00.19 - COAT RACK	PROVIDE THREE (3) COAT RACKS AS INDICATED ON ARCHITECTURAL DRAWINGS AND IN ACCORDANCE WITH SECTION 12 51 00 – OFFICE FURNITURE.
12 69 90.0 - ADA COMPLIANT REFRIGERATOR	PROVIDE FULL HEIGHT ADA COMPLIANT REFRIGERATOR WITH WATER SUPPLY AND DEDICATED ELECTRICAL OUTLET .
12 69 90.1 - MICROWAVE OVEN	PROVIDE BUILT-IN MICROWAVE OVEN WITH TRIM KIT AND DEDICATED ELECTRICAL SERVICE CONNECTIONS.

DIVISION 14

14 21 23.0 - ELECTRIC ELEVATOR, PASSENGER	PROVIDE CUSTOM TRACTION ELECTRIC PASSENGER ELEVATOR WITHOUT THE NEED FOR A SEPARATE MACHINERY ROOM WITH REMOTE CONTROLLER LOCATED INSIDE THE WALL NEXT TO THE TOP LANDING ENTRANCE FRAME. COORDINATE WORK OF 14 21 23 WITH ASSOCIATED ELECTRICAL, SIGNAL AND PLUMBING INCLUDED AS PART OF THE WORK.
14 21 23.1 - ELEVATOR METALS	PROVIDE DUNNAGE BEAM, SUPPORT BRACKETS, AND ASSOCIATED METALS, INCLUDING SUMP COVER AND LADDER.
14 21 23.2 - ELEVATOR PLUMBING AND ELECTRICAL	MINIMUM THREE SQUARE FEET VENT AT TOP OF ELEVATOR SHAFTWAY SHALL BE PROVIDED AS WORK OF DIVISION 23 HVAC IN ACCORDANCE WITH NEW YORK STATE ELEVATOR CODES. CONTRACTOR TO COORDINATE AS REQUIRED FOR COMPLETE ELEVATOR INSTALLATION.
14 21 23.3 - ELEVATOR VENTILATION	MINIMUM THREE SQUARE FEET VENT AT TOP OF ELEVATOR SHAFTWAY SHALL BE PROVIDED AS WORK OF DIVISION 23 HVAC. CONTRACTOR TO COORDINATE AS REQUIRED FOR COMPLETE ELEVATOR INSTALLATION.

DIVISION 22

22 40 00.0 - PLUMBING FIXTURES	COORDINATE LOCATIONS OF ALL PLUMBING FIXTURES WITH PLUMBING CONTRACTOR. PLUMBING FIXTURES, INCLUDING BUT NOT LIMITED TO, WATER CLOSETS, LAVATORIES, SHOWERS, SERVICE SINKS, DRINKING FOUNTAIN, EMERGENCY EYEWASH AND SHOWERS, SHALL BE IN ACCORDANCE WITH SECTION 22 40 00.

DIVISION 26

26 05 33.13.0 - CONDUITS	CONTRACTOR TO COORDINATE CONCEALED AND EXPOSED CONDUITS AS INDICATED ON THE ELECTRICAL DRAWINGS AND IN ACCORDANCE WITH SECTION 26 05 33.13.
26 41 13.0 - LIGHTNING PROTECTION SYSTEM	PROVIDE LIGHTNING PROTECTION SYSTEM IN ACCORDANCE WITH WORK ASSOCIATED WITH DIVISION 26. REFER TO ELECTRICAL DRAWINGS FOR QUANTITY. ALL WIRING SHALL BE CONCEALED FROM VIEW

DIVISION 32

32 31 19.0 - ORNAMENTAL FENCES AND GATES	PROVIDE ORNAMENTAL METAL FENCES AND VEHICULAR SWING GATES IN ACCORDANCE WITH SECTION 32 31 19. REFER TO CIVIL DRAWING

NOTES:

1. REFER TO DRAWINGS A-005 AND A-006 IN ARCHITECTURAL DRAWING SET FOR TEXT ASSOCIATED WITH ALL NOTE TAGS.

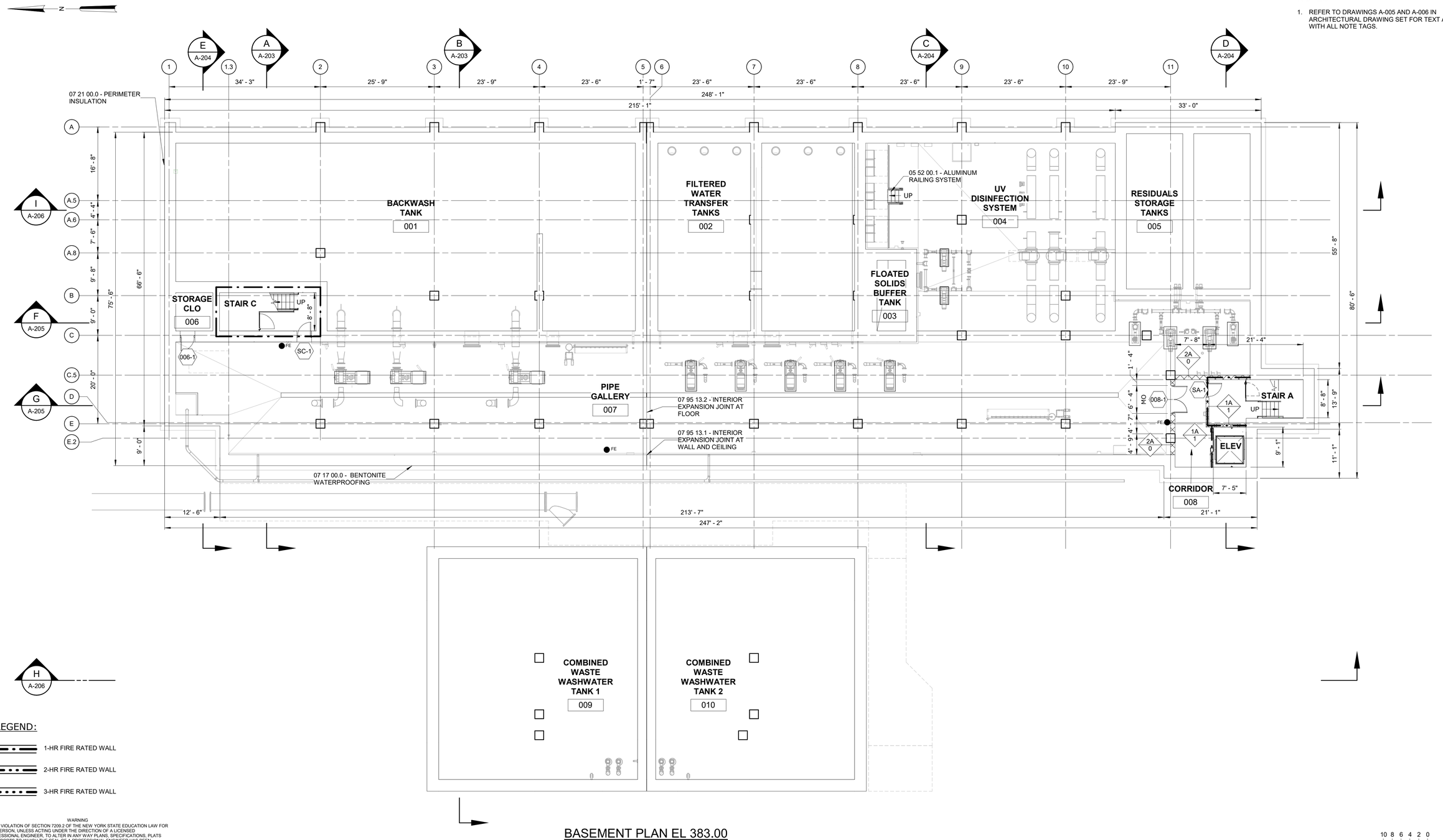

LEGEND:

- 1-HR FIRE RATED WALL
- 2-HR FIRE RATED WALL
- 3-HR FIRE RATED WALL

WARNING
IT IS A VIOLATION OF SECTION 7209.2 OF THE NEW YORK STATE EDUCATION LAW FOR ANY PERSON, UNLESS ACTING UNDER THE DIRECTION OF A LICENSED PROFESSIONAL ENGINEER, TO ALTER IN ANY WAY PLANS, SPECIFICATIONS, PLATS OR REPORTS TO WHICH THE SEAL OF A PROFESSIONAL ENGINEER HAS BEEN APPLIED. IF AN ITEM BEARING THE SEAL OF A PROFESSIONAL ENGINEER IS ALTERED, THE ALTERING ENGINEER SHALL AFFIX TO THE ITEM HIS SEAL AND THE NOTATION "ALTERED BY" FOLLOWED BY HIS SIGNATURE, THE DATE, AND A SPECIFIC DESCRIPTION OF THE ALTERATION.

BASEMENT PLAN EL 383.00

3/32" = 1'-0"

3/32" = 1'-0"

REV	ISSUED FOR	DATE	BY

PROJECT ENGINEER:	R. FROST
DESIGNED BY:	J. WOJCIESKI
DRAWN BY:	J.MARTINEZ
CHECKED BY:	M. STALLONE

IF THIS BAR DOES NOT MEASURE 1" THEN DRAWING IS NOT TO FULL SCALE (0 1/2" 1")

BID SET

REGISTERED ARCHITECT JENNIFER WOJCIESKI 034146 STATE OF NEW YORK

Hazen
HAZEN AND SAWYER
498 SEVENTH AVENUE, 11th FLOOR
NEW YORK, NEW YORK 10018

WESTCHESTER JOINT WATER WORKS
MAMARONECK, NY

RYE LAKE WATER FILTRATION PLANT
HARRISON, NY

FILTRATION PLANT
ARCHITECTURAL
BASEMENT PLAN EL 383.00

DATE:	FEB 2025
HAZEN NO.:	90388-000
CONTRACT NO.:	A1364-A
DRAWING NUMBER:	A-101

Autodesk Docs://90388-000_Rye_Lake_Filtration/90388-000-WFP-A.rvt
2/19/2025 4:34:47 PM

NOTES:

1. REFER TO DRAWINGS A-005 AND A-006 IN ARCHITECTURAL DRAWING SET FOR TEXT ASSOCIATED WITH ALL NOTE TAGS.

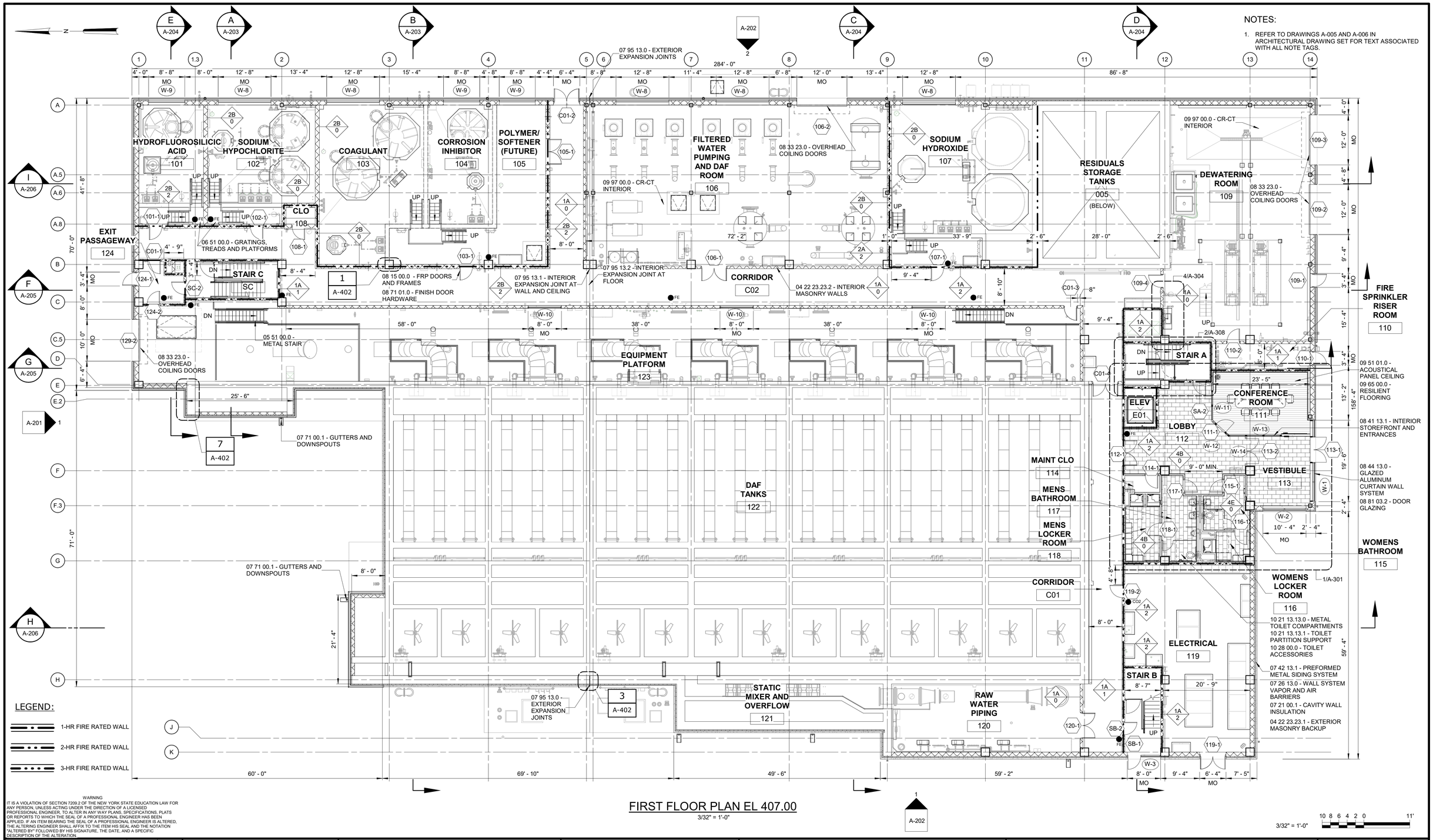

FIRST FLOOR PLAN EL 407.00

3/32" = 1'-0"

3/32" = 1'-0"

WARNING
IT IS A VIOLATION OF SECTION 7209.2 OF THE NEW YORK STATE EDUCATION LAW FOR ANY PERSON, UNLESS ACTING UNDER THE DIRECTION OF A LICENSED PROFESSIONAL ENGINEER, TO ALTER IN ANY WAY PLANS, SPECIFICATIONS, PLATS OR REPORTS TO WHICH THE SEAL OF A PROFESSIONAL ENGINEER HAS BEEN APPLIED. IF AN ITEM BEARING THE SEAL OF A PROFESSIONAL ENGINEER IS ALTERED, THE ALTERING ENGINEER SHALL AFFIX TO THE ITEM HIS SEAL AND THE NOTATION "ALTERED BY" FOLLOWED BY HIS SIGNATURE, THE DATE, AND A SPECIFIC DESCRIPTION OF THE ALTERATION.

REV	ISSUED FOR	DATE	BY

PROJECT ENGINEER:	R. FROST
DESIGNED BY:	J. WOJCIESKI
DRAWN BY:	J.MARTINEZ
CHECKED BY:	M. STALLONE
IF THIS BAR DOES NOT MEASURE 1" THEN DRAWING IS NOT TO FULL SCALE	0 1/2" 1"

BID SET

REGISTERED ARCHITECT JENNIFER WOJCIESKI 034146 STATE OF NEW YORK

Hazen
HAZEN AND SAWYER
498 SEVENTH AVENUE, 11th FLOOR
NEW YORK, NEW YORK 10018

WESTCHESTER JOINT WATER WORKS
MAMARONECK, NY

RYE LAKE WATER FILTRATION PLANT
HARRISON, NY

FILTRATION PLANT
ARCHITECTURAL
FIRST FLOOR PLAN EL 407.00

DATE:	FEB 2025
HAZEN NO.:	90388-000
CONTRACT NO.:	A1364-A
DRAWING NUMBER:	A-102

Autodesk Docs://90388-000_Rye_Lake_Filtration/90388-000-WFP-A.rvt
2/19/2025 4:34:54 PM

NOTES:

1. REFER TO DRAWINGS A-005 AND A-006 IN ARCHITECTURAL DRAWING SET FOR TEXT ASSOCIATED WITH ALL NOTE TAGS.

HYDROFLUOROSILICIC ACID 101 (BELOW)
SODIUM HYPOCHLORITE 102 (BELOW)
COAGULANT 103 (BELOW)
CORROSION INHIBITOR 104 (BELOW)
POLYMER/ SOFTENER (FUTURE) 105 (BELOW)
CORRIDOR C02 (BELOW)
FILTERED WATER PUMPING AND DAF ROOM 106 (BELOW)
SODIUM HYDROXIDE 107 (BELOW)
HVAC PLENUM 217
DEWATERING ROOM BELOW
CORRIDOR BELOW
STOR RM 216
STAIR C
HVAC 201
AIR SCOUR 202
ELECTRICAL ROOM 203
STORAGE ROOM 204
PROCESS ANALYSIS ROOM 205
CONTROL ROOM 206
SCADA ROOM 207
HVAC 208
CORRIDOR C03
DAF TANK BELOW
STAIR A
COPY ROOM 209
CHIEF'S OFFICE 210
ELEV E01
CORRIDOR 211
MAINT CLO 212
WC 213
OPEN OFFICE 214
CORRIDOR C04
HVAC 215
OPERATING LEVEL 218
STAIR B
STATIC MIXER AND OVERFLOW 121 (BELOW)
RAW WATER PIPING 120 (BELOW)

08 15 00.0 - FRP DOORS AND FRAMES
08 71 01.0 - FINISH DOOR HARDWARE
07 95 13.2 - INTERIOR EXPANSION JOINT AT FLOOR
12 35 53.0 - LABORATORY CASEWORK
08 11 16.0 - ALUMINUM DOORS AND FRAMES
08 71 01.0 - FINISH DOOR HARDWARE
07 71 00.1 - GUTTERS AND DOWNSPOUTS
07 54 19.0 - PVC ROOFING SYSTEM

REFER TO THE FOLLOWING NOTES FOR EXTERIOR WALL SYSTEMS:
07 42 13.1 - PREFORMED METAL SIDING SYSTEM
07 26 13.0 - WALL SYSTEM VAPOR AND AIR BARRIERS
07 21 00.1 - CAVITY WALL INSULATION
04 22 23.23.1 - EXTERIOR MASONRY BACKUP

08 41 13.0 - ALUMINUM-FRAMED ENTRANCES AND STOREFRONT
07 61 13.0 - STANDING SEAM METAL ROOFING
07 95 13.0 - EXTERIOR EXPANSION JOINTS

LEGEND:
1-HR FIRE RATED WALL
2-HR FIRE RATED WALL
3-HR FIRE RATED WALL

WARNING
IT IS A VIOLATION OF SECTION 7209.2 OF THE NEW YORK STATE EDUCATION LAW FOR ANY PERSON, UNLESS ACTING UNDER THE DIRECTION OF A LICENSED PROFESSIONAL ENGINEER, TO ALTER IN ANY WAY PLANS, SPECIFICATIONS, PLATS OR REPORTS TO WHICH THE SEAL OF A PROFESSIONAL ENGINEER HAS BEEN APPLIED. IF AN ITEM BEARING THE SEAL OF A PROFESSIONAL ENGINEER IS ALTERED, THE ALTERING ENGINEER SHALL AFFIX TO THE ITEM HIS SEAL AND THE NOTATION "ALTERED BY" FOLLOWED BY HIS SIGNATURE, THE DATE, AND A SPECIFIC DESCRIPTION OF THE ALTERATION.

SECOND FLOOR PLAN EL 421.00

3/32" = 1'-0"

REV	ISSUED FOR	DATE	BY

PROJECT ENGINEER:	R. FROST
DESIGNED BY:	J. WOJCIESKI
DRAWN BY:	J.MARTINEZ
CHECKED BY:	M. STALLONE
IF THIS BAR DOES NOT MEASURE 1" THEN DRAWING IS NOT TO FULL SCALE	0 1/2" 1"

BID SET

REGISTERED ARCHITECT JENNIFER WOJCIESKI 034146 STATE OF NEW YORK

Hazen
HAZEN AND SAWYER
498 SEVENTH AVENUE, 11th FLOOR
NEW YORK, NEW YORK 10018

WESTCHESTER JOINT WATER WORKS
MAMARONECK, NY

RYE LAKE WATER FILTRATION PLANT
HARRISON, NY

FILTRATION PLANT
ARCHITECTURAL
SECOND FLOOR PLAN EL 421.00

DATE:	FEB 2025
HAZEN NO.:	90388-000
CONTRACT NO.:	A1364-A
DRAWING NUMBER:	A-103

Autodesk Docs://90388-000_Rye_Lake_Filtration/90388-000-WFP-A.rvt
2/19/2025 4:34:59 PM

NOTES:

1. REFER TO DRAWINGS A-005 AND A-006 IN ARCHITECTURAL DRAWING SET FOR TEXT ASSOCIATED WITH ALL NOTE TAGS.

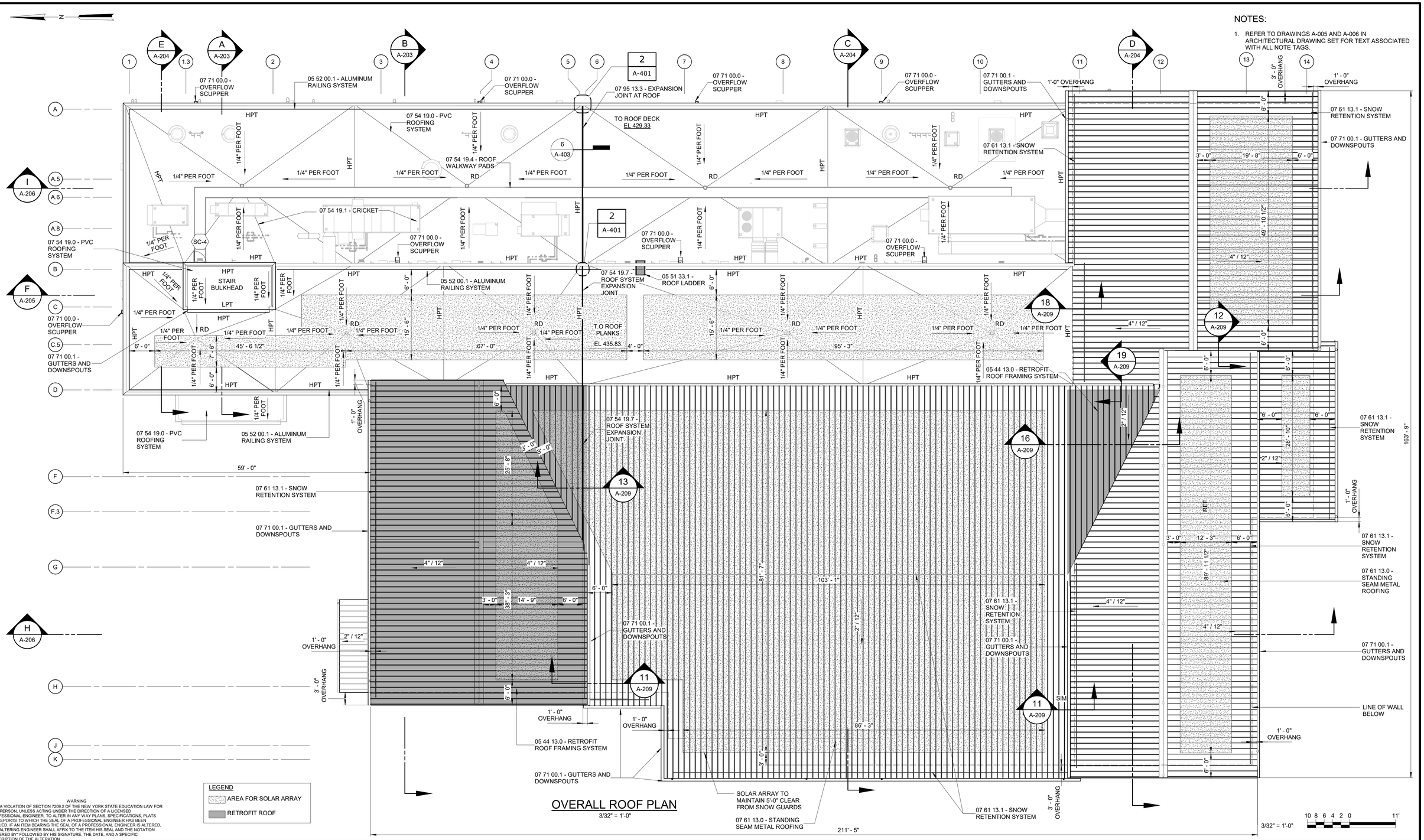

LEGEND

AREA FOR SOLAR ARRAY

RETROFIT ROOF

OVERALL ROOF PLAN

3/32" = 1'-0"

WARNING
IT IS A VIOLATION OF SECTION 7209.2 OF THE NEW YORK STATE EDUCATION LAW FOR ANY PERSON, UNLESS ACTING UNDER THE DIRECTION OF A LICENSED PROFESSIONAL ENGINEER, TO ALTER IN ANY WAY PLANS, SPECIFICATIONS, PLATS OR REPORTS TO WHICH THE SEAL OF A PROFESSIONAL ENGINEER HAS BEEN APPLIED. IF AN ITEM BEARING THE SEAL OF A PROFESSIONAL ENGINEER IS ALTERED, THE ALTERING ENGINEER SHALL AFFIX TO THE ITEM HIS SEAL AND THE NOTATION "ALTERED BY" FOLLOWED BY HIS SIGNATURE, THE DATE, AND A SPECIFIC DESCRIPTION OF THE ALTERATION.

REV	ISSUED FOR	DATE	BY

PROJECT ENGINEER:	R. FROST
DESIGNED BY:	J. WOJCIESKI
DRAWN BY:	J.MARTINEZ
CHECKED BY:	M. STALLONE
IF THIS BAR DOES NOT MEASURE 1" THEN DRAWING IS NOT TO FULL SCALE	0 1/2" 1"

BID SET

REGISTERED ARCHITECT JENNIFER WOJCIESKI 034146 STATE OF NEW YORK

Hazen
HAZEN AND SAWYER
498 SEVENTH AVENUE, 11th FLOOR
NEW YORK, NEW YORK 10018

WESTCHESTER JOINT WATER WORKS
MAMARONECK, NY

RYE LAKE WATER FILTRATION PLANT
HARRISON, NY

FILTRATION PLANT
ARCHITECTURAL
ROOF PLAN

DATE:	FEB 2025
HAZEN NO.:	90388-000
CONTRACT NO.:	A1364-A
DRAWING NUMBER:	A-104

Autodesk Docs://90388-000_Rye_Lake_Filtration/90388-000-WFP-A.rvt
2/19/2025 4:35:12 PM

NOTES:

1. REFER TO DRAWINGS A-005 AND A-006 IN ARCHITECTURAL DRAWING SET FOR TEXT ASSOCIATED WITH ALL NOTE TAGS.

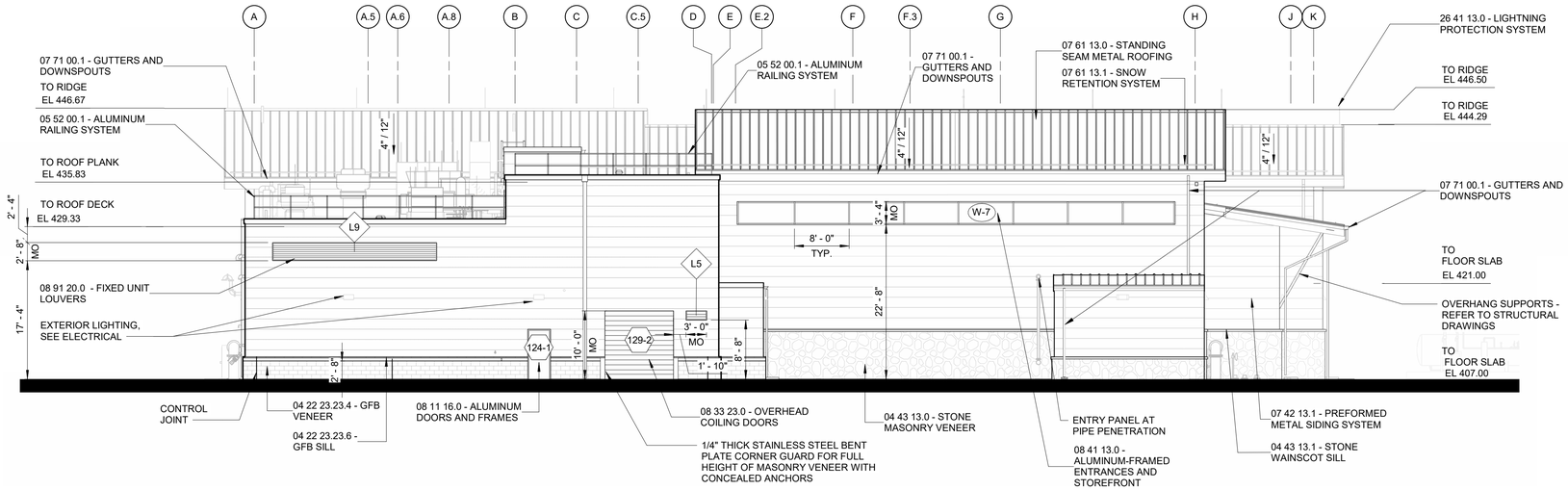

NORTH ELEVATION

3/32" = 1'-0"

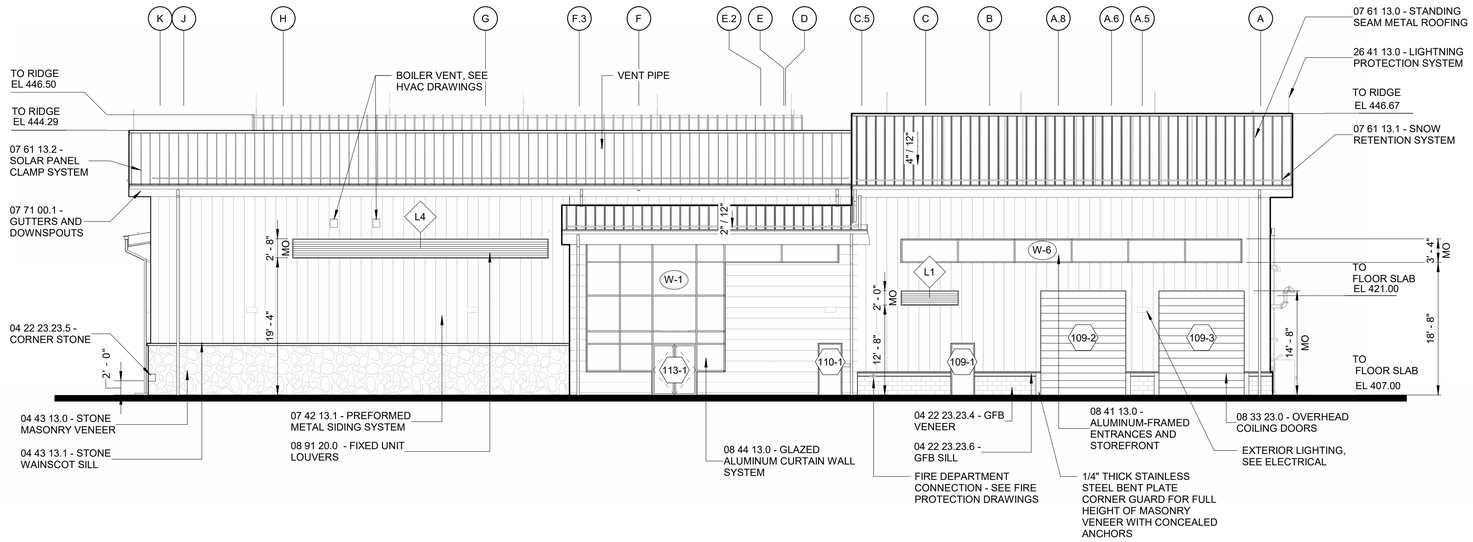

SOUTH ELEVATION

3/32" = 1'-0"

WARNING
IT IS A VIOLATION OF SECTION 7209.2 OF THE NEW YORK STATE EDUCATION LAW FOR ANY PERSON, UNLESS ACTING UNDER THE DIRECTION OF A LICENSED PROFESSIONAL ENGINEER, TO ALTER IN ANY WAY PLANS, SPECIFICATIONS, PLATS OR REPORTS TO WHICH THE SEAL OF A PROFESSIONAL ENGINEER HAS BEEN APPLIED. IF AN ITEM BEARING THE SEAL OF A PROFESSIONAL ENGINEER IS ALTERED, THE ALTERING ENGINEER SHALL AFFIX TO THE ITEM HIS SEAL AND THE NOTATION "ALTERED BY" FOLLOWED BY HIS SIGNATURE, THE DATE, AND A SPECIFIC DESCRIPTION OF THE ALTERATION.

3/32" = 1'-0" 10 8 6 4 2 0 11'

REV	ISSUED FOR	DATE	BY

PROJECT ENGINEER:	R. FROST
DESIGNED BY:	J. WOJCIESKI
DRAWN BY:	J.MARTINEZ
CHECKED BY:	M. STALLONE
IF THIS BAR DOES NOT MEASURE 1" THEN DRAWING IS NOT TO FULL SCALE	0 1/2" 1"

BID SET

REGISTERED ARCHITECT JENNIFER WOJCIESKI 034146 STATE OF NEW YORK

Hazen

HAZEN AND SAWYER
498 SEVENTH AVENUE, 11th FLOOR
NEW YORK, NEW YORK 10018

WESTCHESTER JOINT WATER WORKS
MAMARONECK, NY

RYE LAKE WATER FILTRATION PLANT
HARRISON, NY

FILTRATION PLANT
ARCHITECTURAL
EXTERIOR ELEVATIONS - SHEET 1 OF 2

DATE:	FEB 2025
HAZEN NO.:	90388-000
CONTRACT NO.:	A1364-A
DRAWING NUMBER:	A-201

Autodesk Docs://90388-000_Rye_Lake_Filtration/90388-000-WFP-A.rvt
2/19/2025 4:35:43 PM

NOTES:

1. REFER TO DRAWINGS A-005 AND A-006 IN ARCHITECTURAL DRAWING SET FOR TEXT ASSOCIATED WITH ALL NOTE TAGS.

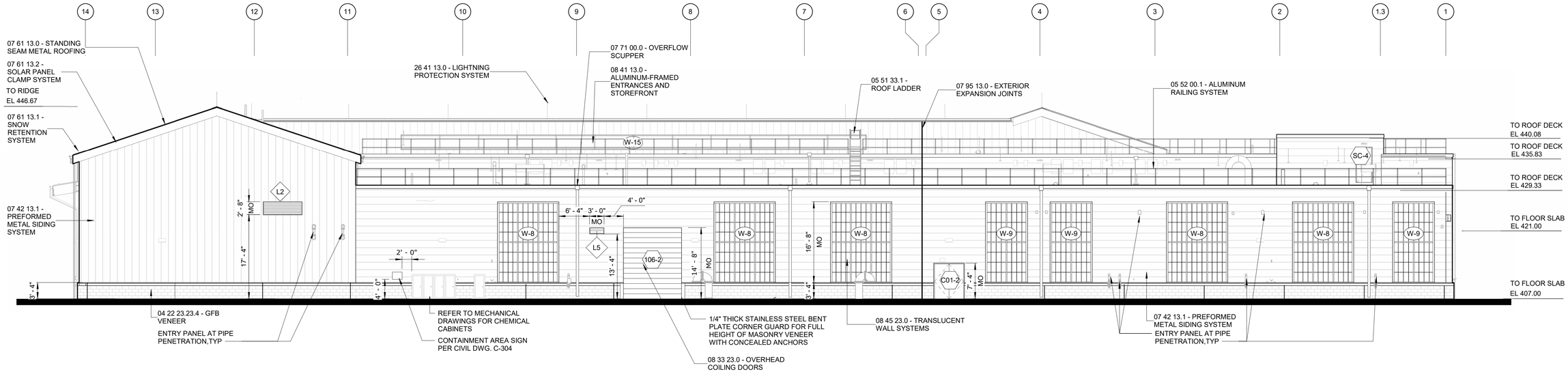

EAST ELEVATION

3/32" = 1'-0"

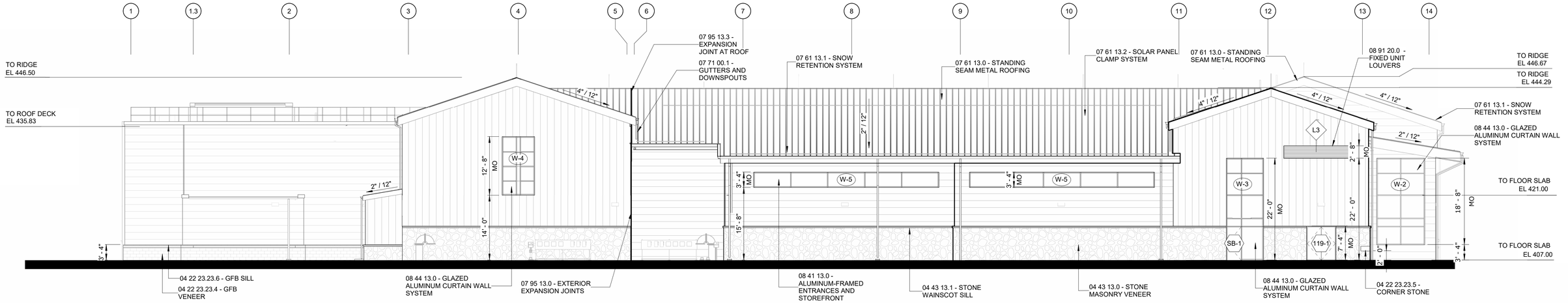

WEST ELEVATION

3/32" = 1'-0"

WARNING
IT IS A VIOLATION OF SECTION 7209.2 OF THE NEW YORK STATE EDUCATION LAW FOR ANY PERSON, UNLESS ACTING UNDER THE DIRECTION OF A LICENSED PROFESSIONAL ENGINEER, TO ALTER IN ANY WAY PLANS, SPECIFICATIONS, PLATS OR REPORTS TO WHICH THE SEAL OF A PROFESSIONAL ENGINEER HAS BEEN APPLIED. IF AN ITEM BEARING THE SEAL OF A PROFESSIONAL ENGINEER IS ALTERED, THE ALTERING ENGINEER SHALL AFFIX TO THE ITEM HIS SEAL AND THE NOTATION "ALTERED BY" FOLLOWED BY HIS SIGNATURE, THE DATE, AND A SPECIFIC DESCRIPTION OF THE ALTERATION.

3/32" = 1'-0" 10 8 6 4 2 0 11'

REV	ISSUED FOR	DATE	BY

PROJECT ENGINEER:	R. FROST
DESIGNED BY:	J. WOJCIESKI
DRAWN BY:	J.MARTINEZ
CHECKED BY:	M. STALLONE
IF THIS BAR DOES NOT MEASURE 1" THEN DRAWING IS NOT TO FULL SCALE	0 1/2" 1"

BID SET

REGISTERED ARCHITECT JENNIFER WOJCIESKI 034146 STATE OF NEW YORK

Hazen

HAZEN AND SAWYER
498 SEVENTH AVENUE, 11th FLOOR
NEW YORK, NEW YORK 10018

WESTCHESTER JOINT WATER WORKS
MAMARONECK, NY

RYE LAKE WATER FILTRATION PLANT
HARRISON, NY

FILTRATION PLANT
ARCHITECTURAL
EXTERIOR ELEVATIONS - SHEET 2 OF 2

DATE:	FEB 2025
HAZEN NO.:	90388-000
CONTRACT NO.:	A1364-A
DRAWING NUMBER:	A-202

Autodesk Docs://90388-000_Rye_Lake_Filtration/90388-000-WFP-A.rvt
2/19/2025 4:36:13 PM

NOTES:

1. REFER TO DRAWINGS A-005 AND A-006 IN ARCHITECTURAL DRAWING SET FOR TEXT ASSOCIATED WITH ALL NOTE TAGS.

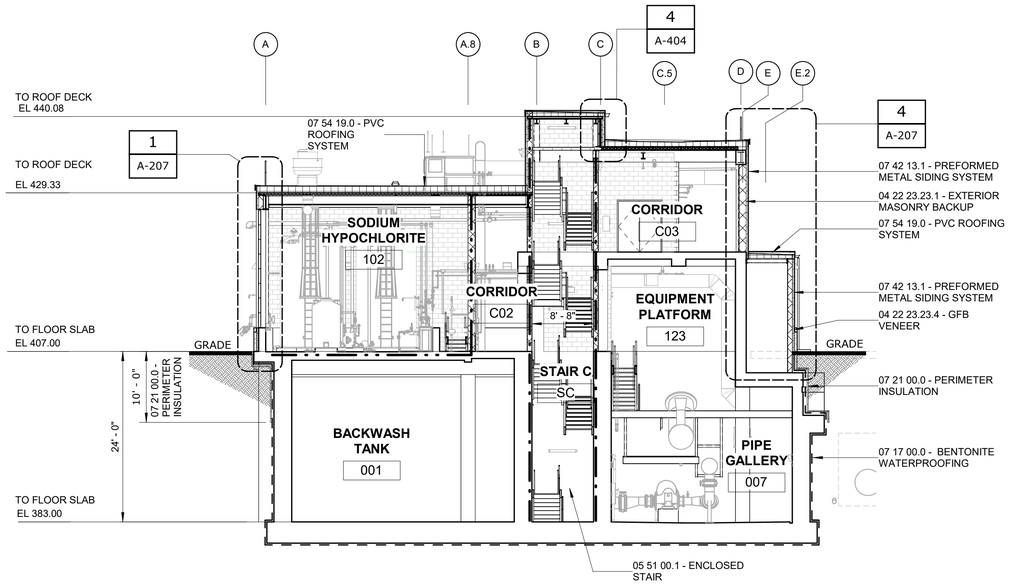

SECTION A
3/32" = 1'-0"
A-101

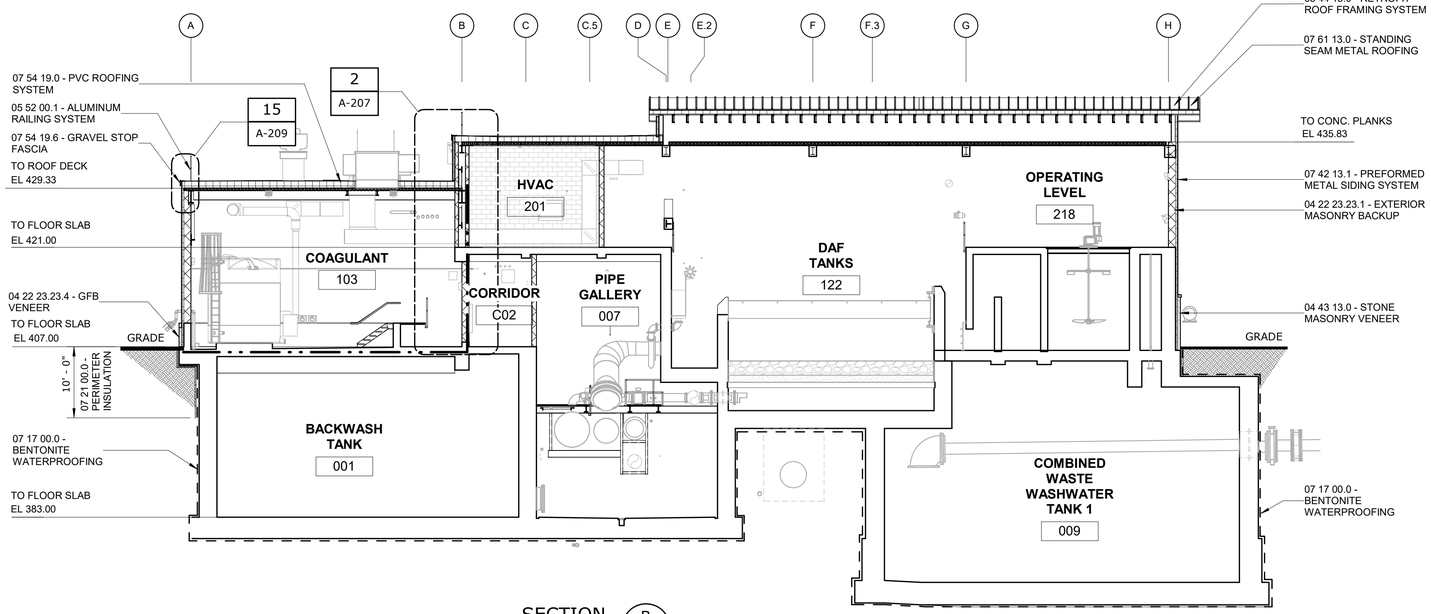

SECTION B
3/32" = 1'-0"
A-101

3/32" = 1'-0"
10 8 6 4 2 0 11'

WARNING
IT IS A VIOLATION OF SECTION 7209.2 OF THE NEW YORK STATE EDUCATION LAW FOR ANY PERSON, UNLESS ACTING UNDER THE DIRECTION OF A LICENSED PROFESSIONAL ENGINEER, TO ALTER IN ANY WAY PLANS, SPECIFICATIONS, PLATS OR REPORTS TO WHICH THE SEAL OF A PROFESSIONAL ENGINEER HAS BEEN APPLIED. IF AN ITEM BEARING THE SEAL OF A PROFESSIONAL ENGINEER IS ALTERED, THE ALTERING ENGINEER SHALL AFFIX TO THE ITEM HIS SEAL AND THE NOTATION "ALTERED BY" FOLLOWED BY HIS SIGNATURE, THE DATE, AND A SPECIFIC DESCRIPTION OF THE ALTERATION.

REV	ISSUED FOR	DATE	BY

PROJECT ENGINEER:	R. FROST
DESIGNED BY:	J. WOJCIESKI
DRAWN BY:	J.MARTINEZ
CHECKED BY:	M. STALLONE

IF THIS BAR DOES NOT MEASURE 1" THEN DRAWING IS NOT TO FULL SCALE 0 1/2" 1"

BID SET

REGISTERED ARCHITECT JENNIFER WOJCIESKI 034146 STATE OF NEW YORK

Hazen
HAZEN AND SAWYER
498 SEVENTH AVENUE, 11th FLOOR
NEW YORK, NEW YORK 10018

WESTCHESTER JOINT WATER WORKS
MAMARONECK, NY

RYE LAKE WATER FILTRATION PLANT
HARRISON, NY

FILTRATION PLANT
ARCHITECTURAL
BUILDING SECTIONS - SHEET 1 OF 4

DATE:	FEB 2025
HAZEN NO.:	90388-000
CONTRACT NO.:	A1364-A
DRAWING NUMBER:	A-203

Autodesk Docs://90388-000_Rye_Lake_Filtration/90388-000-WFP-A.rvt
2/19/2025 4:36:22 PM

NOTES:

1. REFER TO DRAWINGS A-005 AND A-006 IN ARCHITECTURAL DRAWING SET FOR TEXT ASSOCIATED WITH ALL NOTE TAGS.

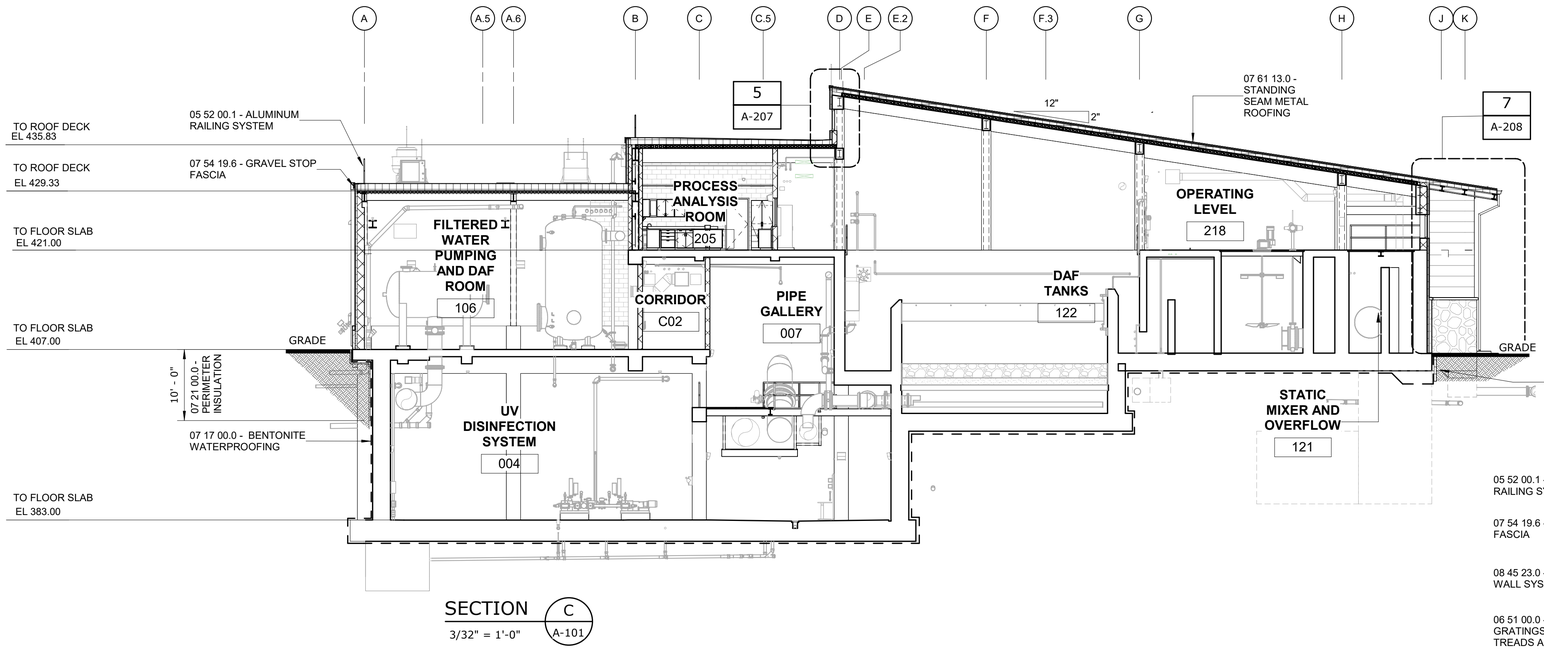

SECTION C
3/32" = 1'-0"
A-101

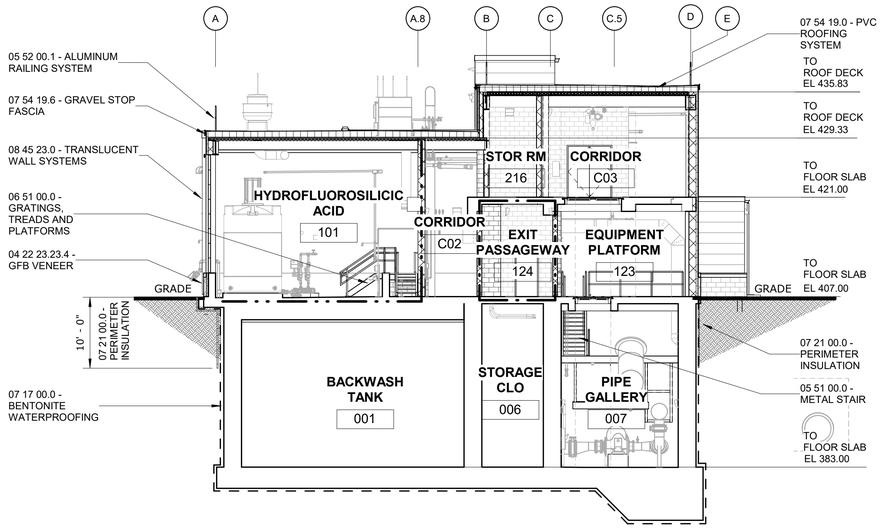

SECTION E
3/32" = 1'-0"
A-101

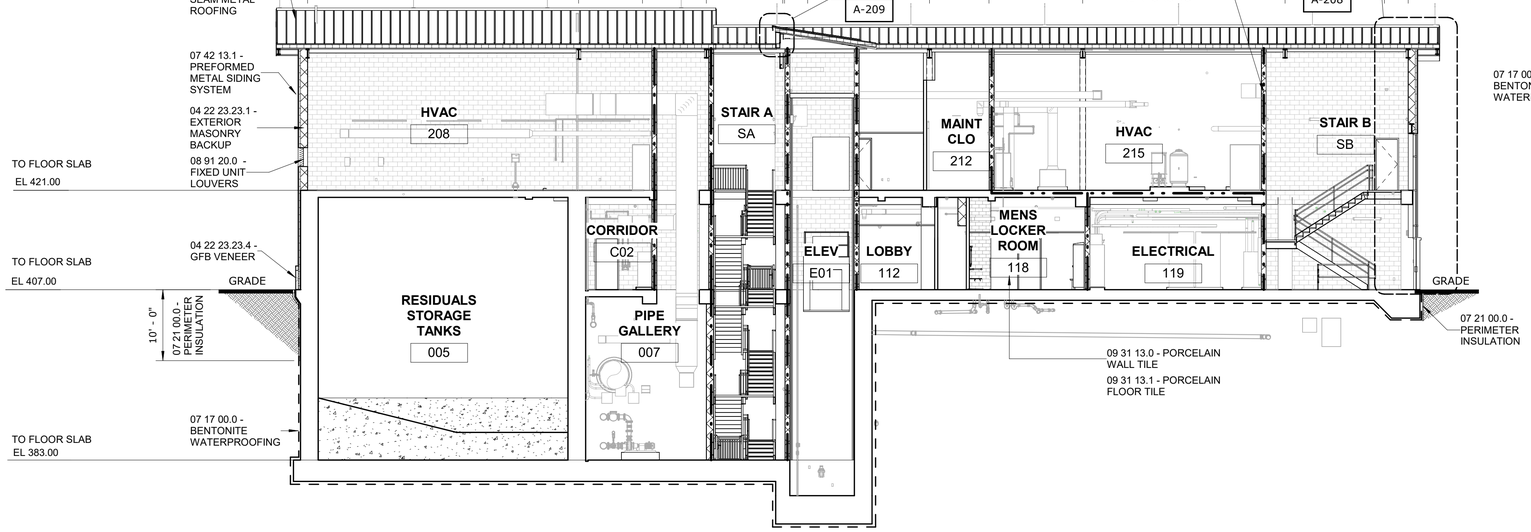

SECTION D
3/32" = 1'-0"
A-101

3/32" = 1'-0"
10 8 6 4 2 0 11'

WARNING
IT IS A VIOLATION OF SECTION 7209.2 OF THE NEW YORK STATE EDUCATION LAW FOR ANY PERSON, UNLESS ACTING UNDER THE DIRECTION OF A LICENSED PROFESSIONAL ENGINEER, TO ALTER IN ANY WAY PLANS, SPECIFICATIONS, PLATS OR REPORTS TO WHICH THE SEAL OF A PROFESSIONAL ENGINEER HAS BEEN APPLIED. IF AN ITEM BEARING THE SEAL OF A PROFESSIONAL ENGINEER IS ALTERED, THE ALTERING ENGINEER SHALL AFFIX TO THE ITEM HIS SEAL AND THE NOTATION "ALTERED BY" FOLLOWED BY HIS SIGNATURE, THE DATE, AND A SPECIFIC DESCRIPTION OF THE ALTERATION.

REV	ISSUED FOR	DATE	BY

PROJECT ENGINEER:	R. FROST
DESIGNED BY:	J. WOJCIESKI
DRAWN BY:	J.MARTINEZ
CHECKED BY:	M. STALLONE
IF THIS BAR DOES NOT MEASURE 1" THEN DRAWING IS NOT TO FULL SCALE	0 1/2" 1"

BID SET

REGISTERED ARCHITECT JENNIFER WOJCIESKI 034146 STATE OF NEW YORK

Hazen

HAZEN AND SAWYER
498 SEVENTH AVENUE, 11th FLOOR
NEW YORK, NEW YORK 10018

WESTCHESTER JOINT WATER WORKS
MAMARONECK, NY

RYE LAKE WATER FILTRATION PLANT
HARRISON, NY

FILTRATION PLANT
ARCHITECTURAL
BUILDING SECTIONS - SHEET 2 OF 4

DATE:	FEB 2025
HAZEN NO.:	90388-000
CONTRACT NO.:	A1364-A
DRAWING NUMBER:	A-204

Autodesk Docs://90388-000_Rye_Lake_Filtration/90388-000-WFP-A.rvt
2/19/2025 4:36:41 PM

NOTES:

1. REFER TO DRAWINGS A-005 AND A-006 IN ARCHITECTURAL DRAWING SET FOR TEXT ASSOCIATED WITH ALL NOTE TAGS.

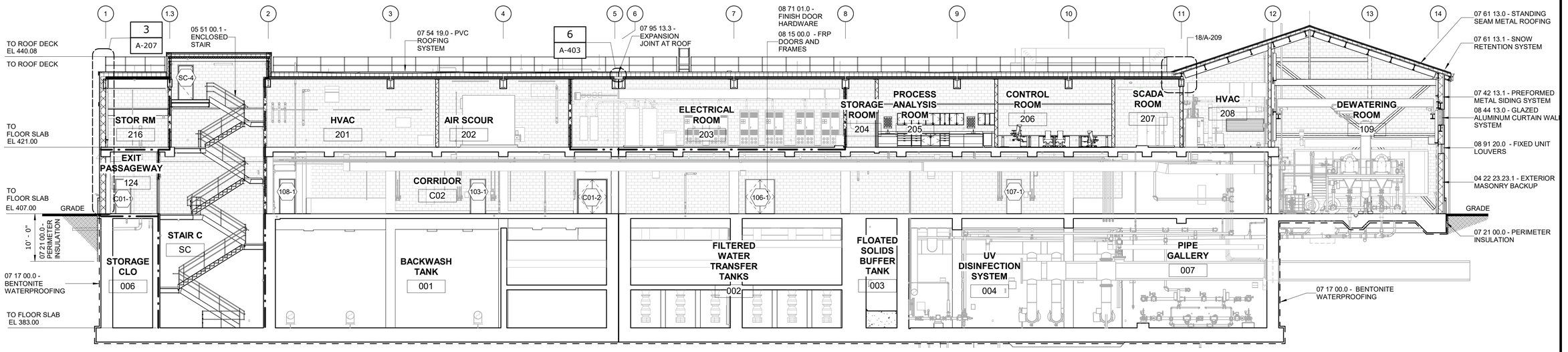

SECTION F
3/32" = 1'-0"
A-101

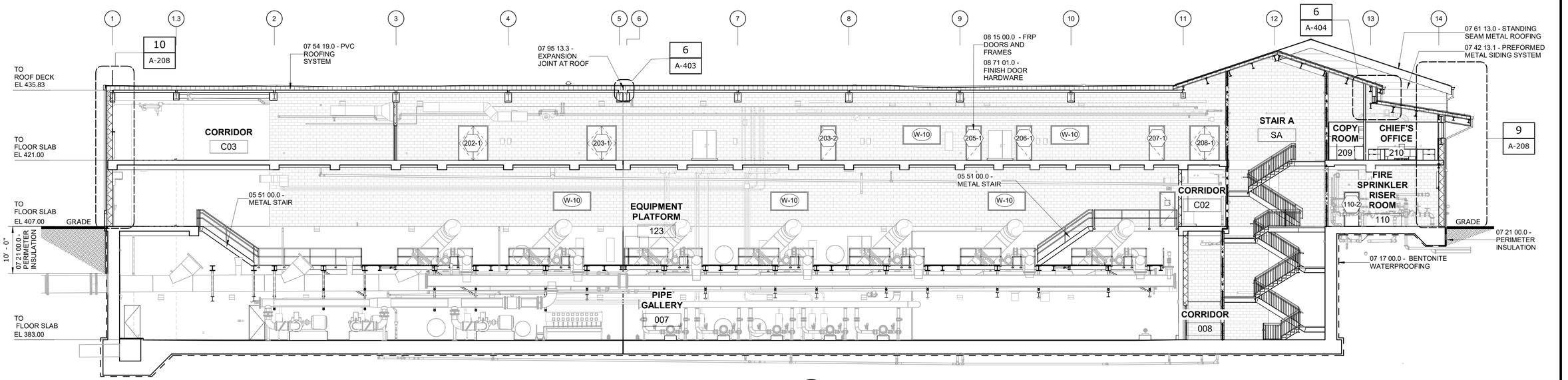

SECTION G
3/32" = 1'-0"
A-101

3/32" = 1'-0"
10 8 6 4 2 0 11'

WARNING
IT IS A VIOLATION OF SECTION 7209.2 OF THE NEW YORK STATE EDUCATION LAW FOR ANY PERSON, UNLESS ACTING UNDER THE DIRECTION OF A LICENSED PROFESSIONAL ENGINEER, TO ALTER IN ANY WAY PLANS, SPECIFICATIONS, PLATS OR REPORTS TO WHICH THE SEAL OF A PROFESSIONAL ENGINEER HAS BEEN APPLIED. IF AN ITEM BEARING THE SEAL OF A PROFESSIONAL ENGINEER IS ALTERED, THE ALTERING ENGINEER SHALL AFFIX TO THE ITEM HIS SEAL AND THE NOTATION "ALTERED BY" FOLLOWED BY HIS SIGNATURE, THE DATE, AND A SPECIFIC DESCRIPTION OF THE ALTERATION.

REV	ISSUED FOR	DATE	BY

PROJECT ENGINEER:	R. FROST
DESIGNED BY:	J. WOJCIESKI
DRAWN BY:	J.MARTINEZ
CHECKED BY:	M. STALLONE
IF THIS BAR DOES NOT MEASURE 1" THEN DRAWING IS NOT TO FULL SCALE	0 1/2" 1"

BID SET

REGISTERED ARCHITECT JENNIFER WOJCIESKI 034146 STATE OF NEW YORK

Hazen
HAZEN AND SAWYER
498 SEVENTH AVENUE, 11th FLOOR
NEW YORK, NEW YORK 10018

WESTCHESTER JOINT WATER WORKS
MAMARONECK, NY

RYE LAKE WATER FILTRATION PLANT
HARRISON, NY

FILTRATION PLANT
ARCHITECTURAL
BUILDING SECTIONS - SHEET 3 OF 4

DATE:	FEB 2025
HAZEN NO.:	90388-000
CONTRACT NO.:	A1364-A
DRAWING NUMBER:	A-205

Autodesk Docs://90388-000_Rye_Lake_Filtration/90388-000-WFP-A.rvt
2/19/2025 4:37:26 PM

NOTES:

1. REFER TO DRAWINGS A-005 AND A-006 IN ARCHITECTURAL DRAWING SET FOR TEXT ASSOCIATED WITH ALL NOTE TAGS.

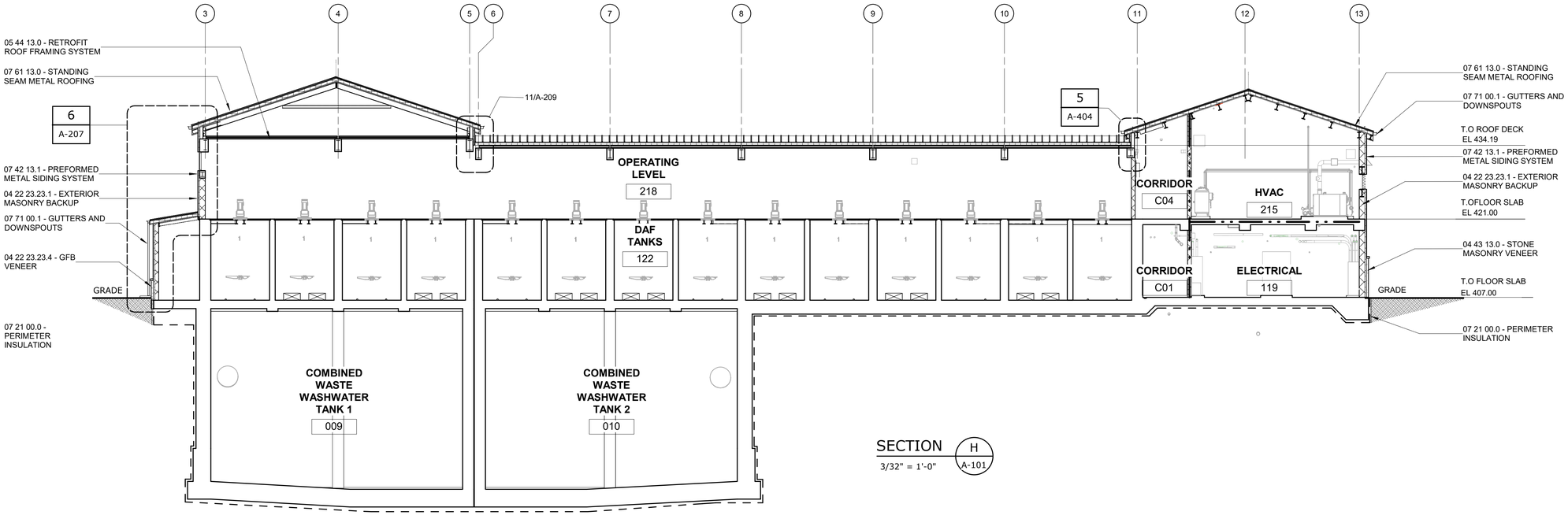

SECTION H
3/32" = 1'-0"
A-101

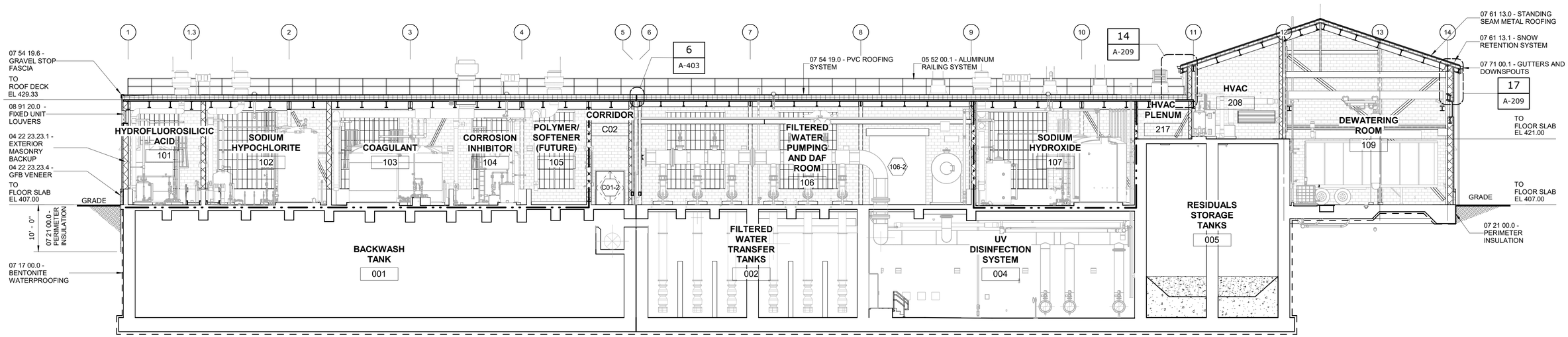

SECTION I
3/32" = 1'-0"
A-101

3/32" = 1'-0"
10 8 6 4 2 0 11'

WARNING
IT IS A VIOLATION OF SECTION 7209.2 OF THE NEW YORK STATE EDUCATION LAW FOR ANY PERSON, UNLESS ACTING UNDER THE DIRECTION OF A LICENSED PROFESSIONAL ENGINEER, TO ALTER IN ANY WAY PLANS, SPECIFICATIONS, PLATS OR REPORTS TO WHICH THE SEAL OF A PROFESSIONAL ENGINEER HAS BEEN APPLIED. IF AN ITEM BEARING THE SEAL OF A PROFESSIONAL ENGINEER IS ALTERED, THE ALTERING ENGINEER SHALL AFFIX TO THE ITEM HIS SEAL AND THE NOTATION "ALTERED BY" FOLLOWED BY HIS SIGNATURE, THE DATE, AND A SPECIFIC DESCRIPTION OF THE ALTERATION.

REV	ISSUED FOR	DATE	BY

PROJECT ENGINEER:	R. FROST
DESIGNED BY:	J. WOJCIESKI
DRAWN BY:	J.MARTINEZ
CHECKED BY:	M. STALLONE
IF THIS BAR DOES NOT MEASURE 1" THEN DRAWING IS NOT TO FULL SCALE	0 1/2" 1"

BID SET

REGISTERED ARCHITECT JENNIFER WOJCIESKI 034146 STATE OF NEW YORK

Hazen
HAZEN AND SAWYER
498 SEVENTH AVENUE, 11th FLOOR
NEW YORK, NEW YORK 10018

WESTCHESTER JOINT WATER WORKS
MAMARONECK, NY

RYE LAKE WATER FILTRATION PLANT
HARRISON, NY

FILTRATION PLANT
ARCHITECTURAL
BUILDING SECTIONS - SHEET 4 OF 4

DATE:	FEB 2025
HAZEN NO.:	90388-000
CONTRACT NO.:	A1364-A
DRAWING NUMBER:	A-206

Autodesk Docs://90388-000_Rye_Lake_Filtration/90388-000-WFP-A.rvt
2/19/2025 4:37:52 PM

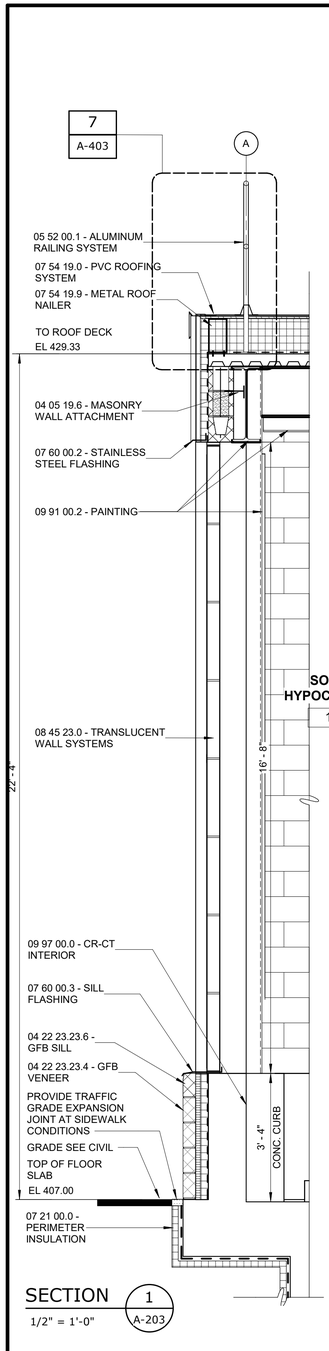

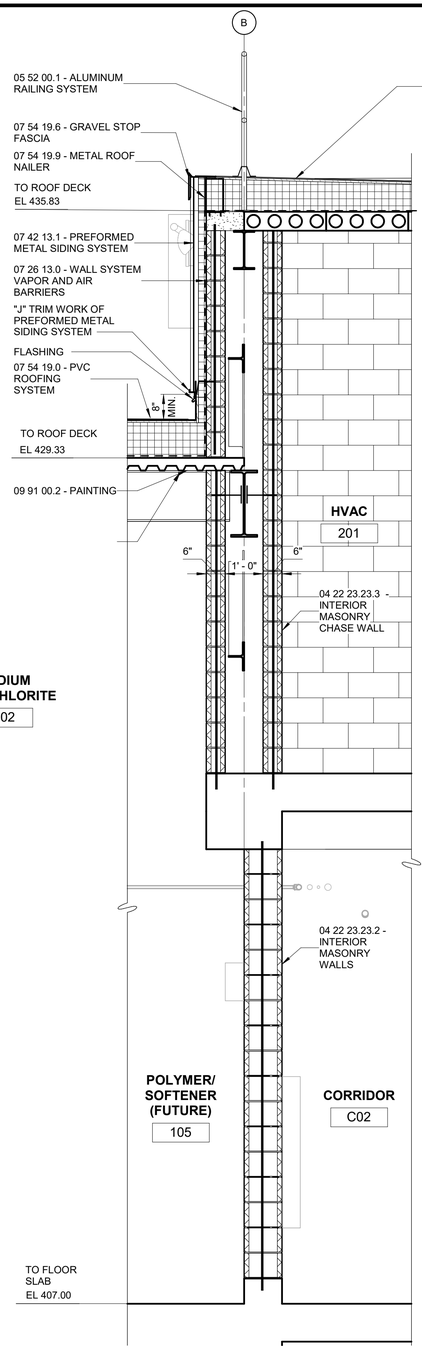

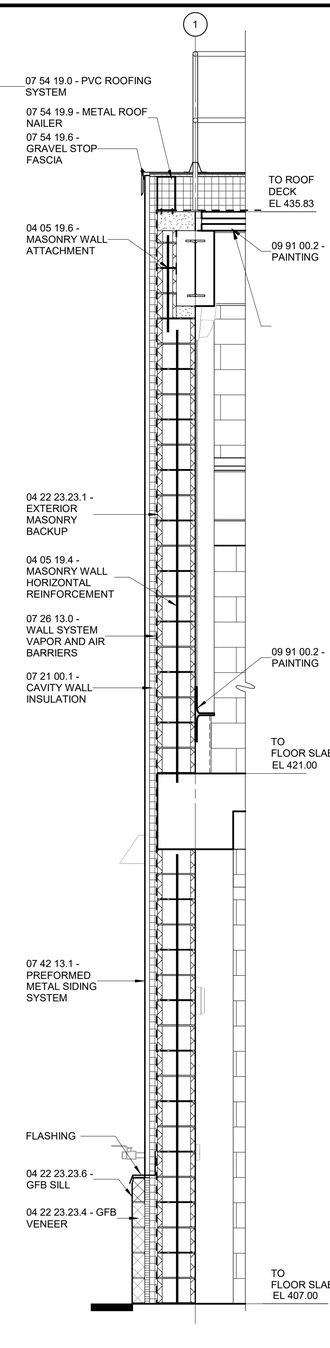

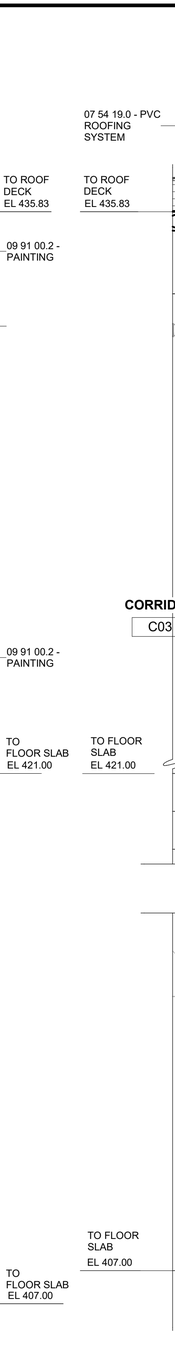

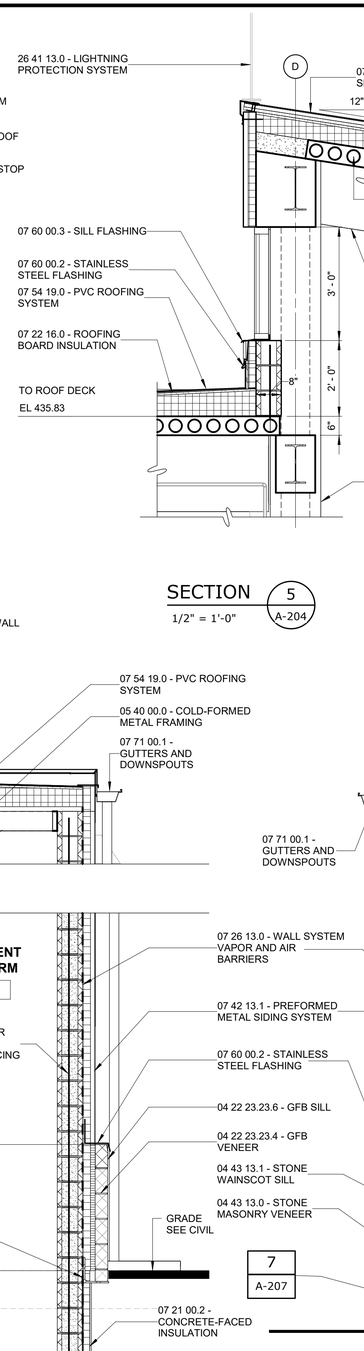

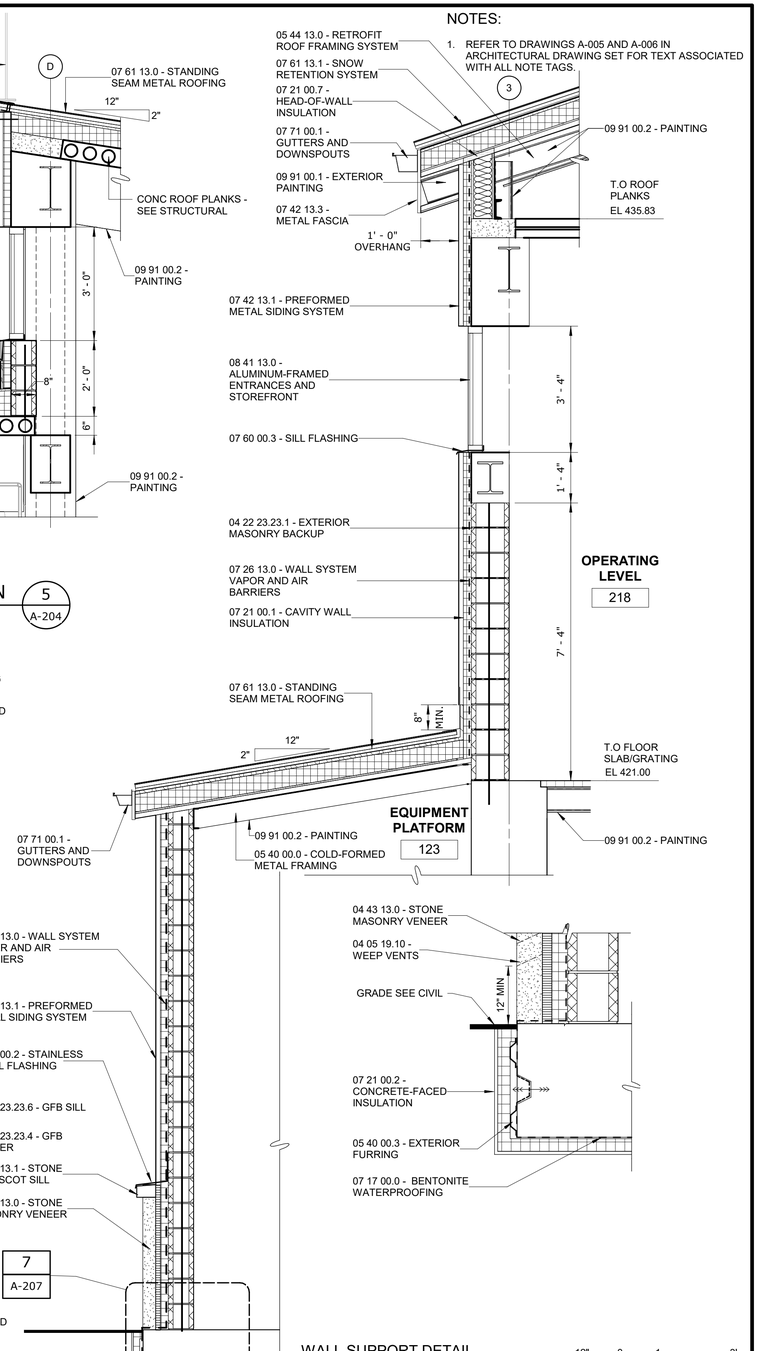

WARNING
IT IS A VIOLATION OF SECTION 7209.2 OF THE NEW YORK STATE EDUCATION LAW FOR ANY PERSON, UNLESS ACTING UNDER THE DIRECTION OF A LICENSED PROFESSIONAL ENGINEER, TO ALTER IN ANY WAY PLANS, SPECIFICATIONS, PLATS OR REPORTS TO WHICH THE SEAL OF A PROFESSIONAL ENGINEER HAS BEEN APPLIED. IF AN ITEM BEARING THE SEAL OF A PROFESSIONAL ENGINEER IS ALTERED, THE ALTERING ENGINEER SHALL AFFIX TO THE ITEM HIS SEAL AND THE NOTATION "ALTERED BY" FOLLOWED BY HIS SIGNATURE, THE DATE, AND A SPECIFIC DESCRIPTION OF THE ALTERATION.

REV	ISSUED FOR	DATE	BY

PROJECT ENGINEER:	R. FROST
DESIGNED BY:	J. WOJCIESKI
DRAWN BY:	J.MARTINEZ
CHECKED BY:	M. STALLONE

IF THIS BAR DOES NOT MEASURE 1" THEN DRAWING IS NOT TO FULL SCALE 0 1/2" 1"

BID SET

REGISTERED ARCHITECT JENNIFER WOJCIESKI 034146 STATE OF NEW YORK

Hazen
HAZEN AND SAWYER
498 SEVENTH AVENUE, 11th FLOOR
NEW YORK, NEW YORK 10018

WESTCHESTER JOINT WATER WORKS
MAMARONECK, NY

RYE LAKE WATER FILTRATION PLANT
HARRISON, NY

FILTRATION PLANT ARCHITECTURAL WALL SECTION & DETAILS - SHEET 1 OF 3

DATE:	FEB 2025
HAZEN NO.:	90388-000
CONTRACT NO.:	A1364-A
DRAWING NUMBER:	A-207

Autodesk Docs://90388-000_Rye_Lake_Filtration/90388-000-WFP-A.rvt
2/19/2025 4:37:57 PM

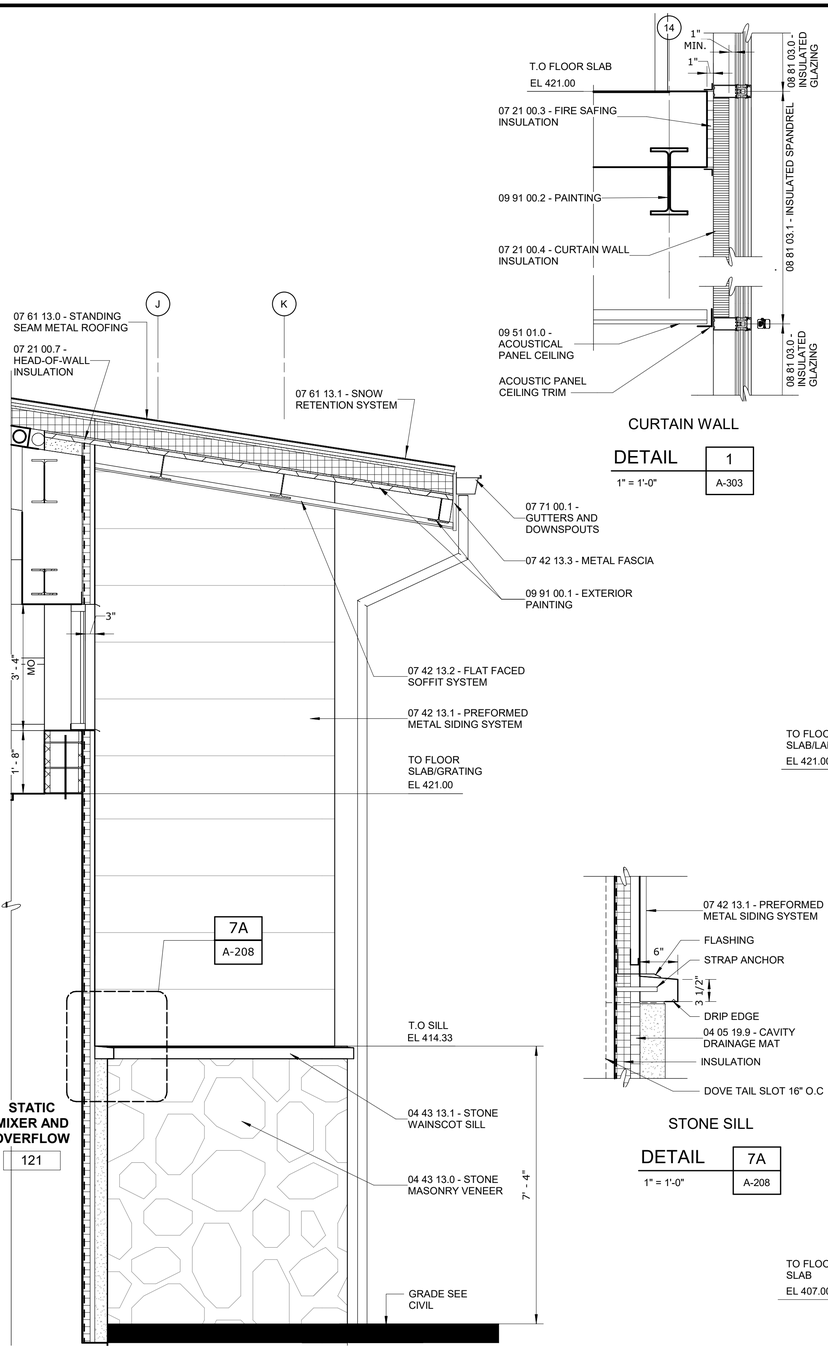

WARNING
IT IS A VIOLATION OF SECTION 7209.2 OF THE NEW YORK STATE EDUCATION LAW FOR ANY PERSON, UNLESS ACTING UNDER THE DIRECTION OF A LICENSED PROFESSIONAL ENGINEER, TO ALTER IN ANY WAY PLANS, SPECIFICATIONS, PLATS OR REPORTS TO WHICH THE SEAL OF A PROFESSIONAL ENGINEER HAS BEEN APPLIED. IF AN ITEM BEARING THE SEAL OF A PROFESSIONAL ENGINEER IS ALTERED, THE ALTERING ENGINEER SHALL AFFIX TO THE ITEM HIS SEAL AND THE NOTATION "ALTERED BY" FOLLOWED BY HIS SIGNATURE, THE DATE, AND A SPECIFIC DESCRIPTION OF THE ALTERATION.

SECTION 7 — 1/2" = 1'-0" — A-204

CURTAIN WALL

DETAIL 1 — 1" = 1'-0" — A-303

STONE SILL

DETAIL 7A — 1" = 1'-0" — A-208

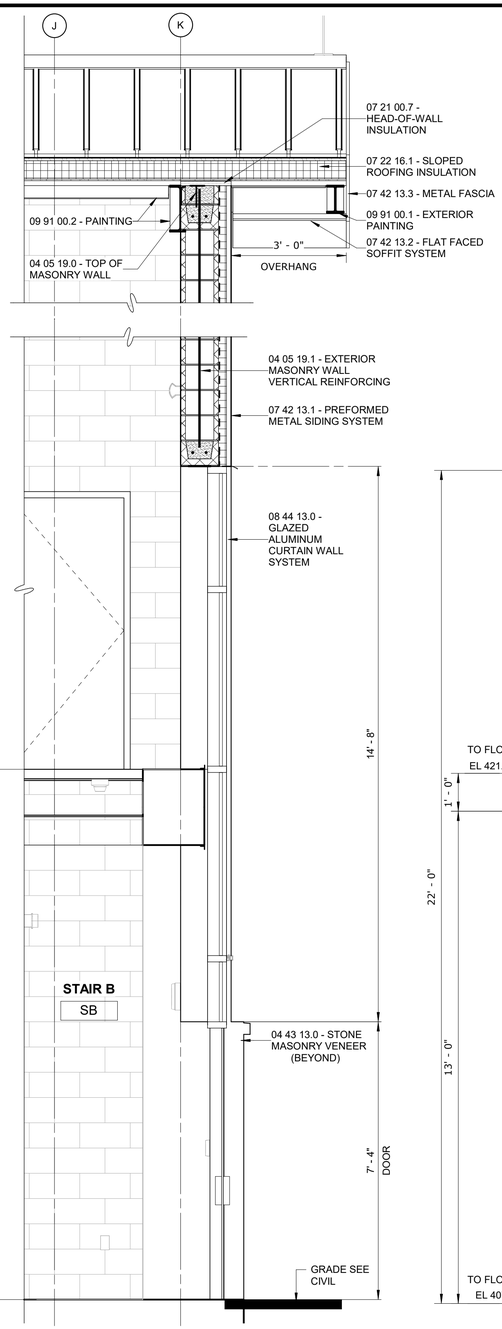

SECTION 8 — 1/2" = 1'-0" — A-204

NOTES:

1. REFER TO DRAWINGS A-005 AND A-006 IN ARCHITECTURAL DRAWING SET FOR TEXT ASSOCIATED WITH ALL NOTE TAGS.

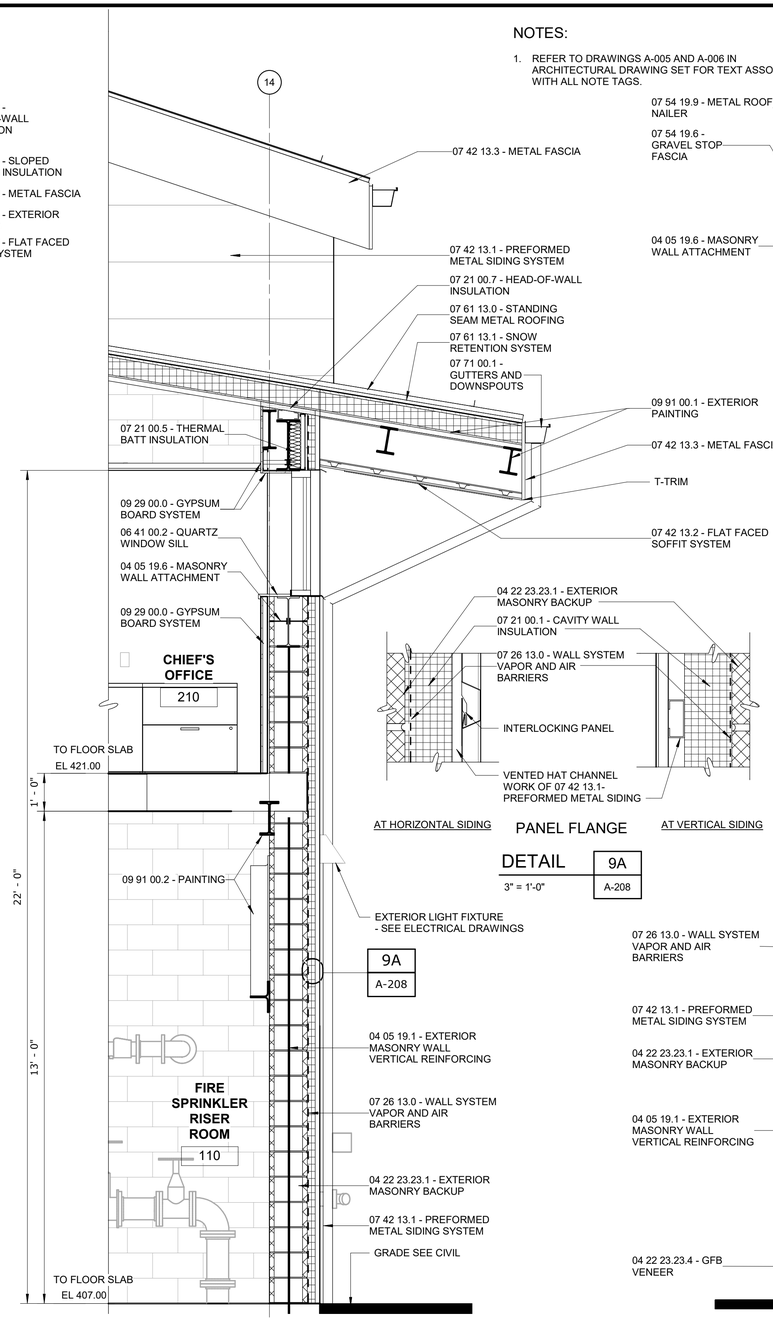

SECTION 9 — 1/2" = 1'-0" — A-205

DETAIL 9A — 3" = 1'-0" — A-208

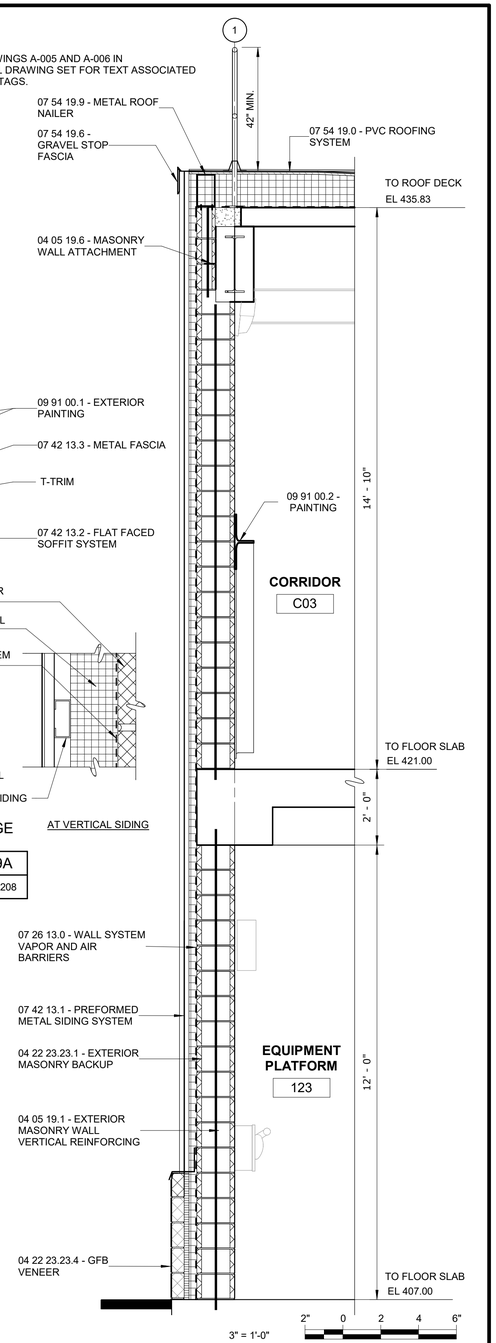

SECTION 10 — 1/2" = 1'-0" — A-205

3" = 1'-0" — 2" 0 2 4 6"
1" = 1'-0" — 12" 6 0 1'
1/2" = 1'-0" — 12" 0 1 3'

REV	ISSUED FOR	DATE	BY

PROJECT ENGINEER:	R. FROST
DESIGNED BY:	J. WOJCIESKI
DRAWN BY:	J.MARTINEZ
CHECKED BY:	M. STALLONE

IF THIS BAR DOES NOT MEASURE 1" THEN DRAWING IS NOT TO FULL SCALE — 0 1/2" 1"

BID SET

REGISTERED ARCHITECT JENNIFER WOJCIESKI 034146 STATE OF NEW YORK

Hazen

HAZEN AND SAWYER
498 SEVENTH AVENUE, 11th FLOOR
NEW YORK, NEW YORK 10018

WESTCHESTER JOINT WATER WORKS
MAMARONECK, NY

RYE LAKE WATER FILTRATION PLANT
HARRISON, NY

FILTRATION PLANT
ARCHITECTURAL
WALL SECTION & DETAILS - SHEET 2 OF 3

DATE:	FEB 2025
HAZEN NO.:	90388-000
CONTRACT NO.:	A1364-A
DRAWING NUMBER:	A-208

Autodesk Docs://90388-000_Rye_Lake_Filtration/90388-000-WFP-A.rvt
2/19/2025 4:38:03 PM

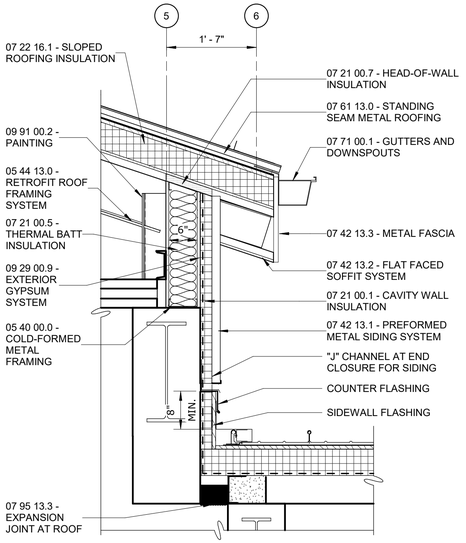

SECTION 11 (A-104)
3/4" = 1'-0"

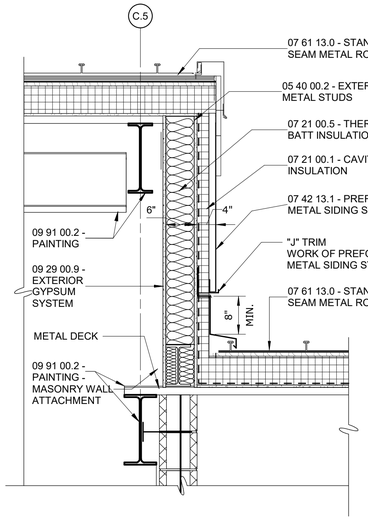

SECTION 12 (A-104)
3/4" = 1'-0"

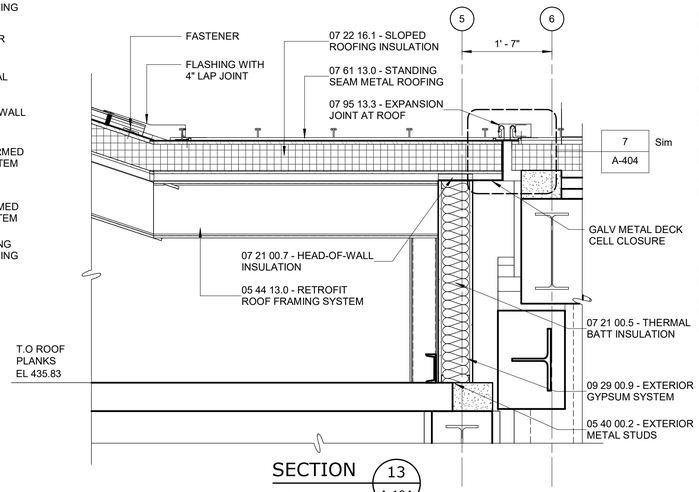

SECTION 13 (A-104)
3/4" = 1'-0"

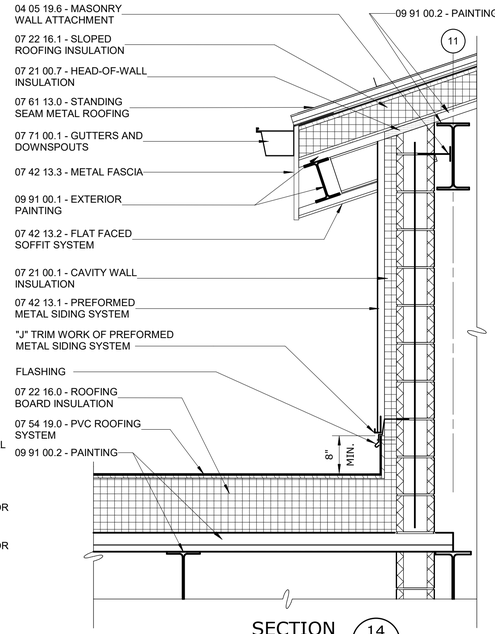

SECTION 14 (A-206)
3/4" = 1'-0"

NOTES:

1. REFER TO DRAWINGS A-005 AND A-006 IN ARCHITECTURAL DRAWING SET FOR TEXT ASSOCIATED WITH ALL NOTE TAGS.

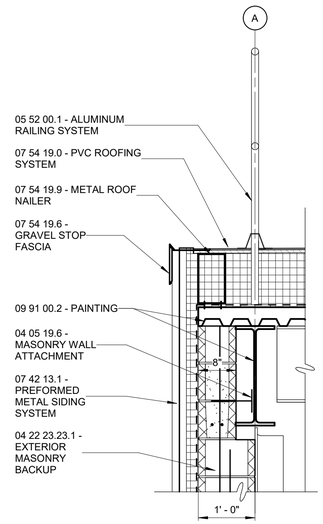

SECTION 15 (A-203)
3/4" = 1'-0"

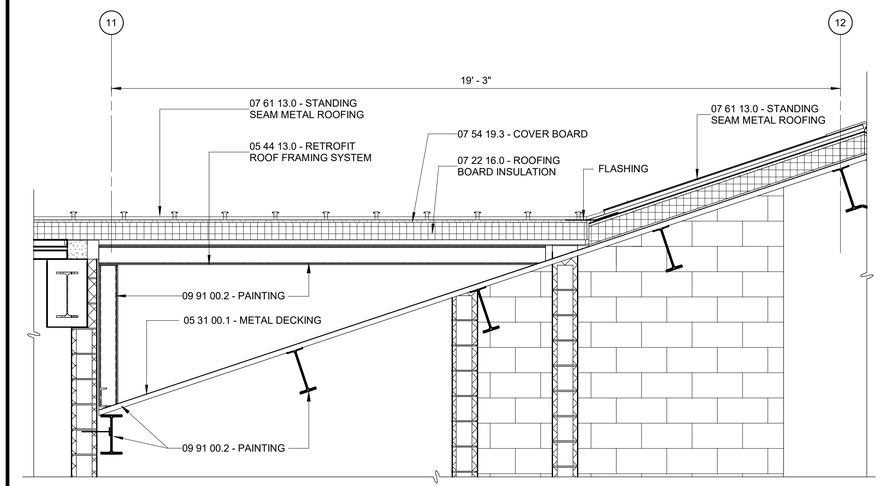

SECTION 16 (A-104)
1/2" = 1'-0"

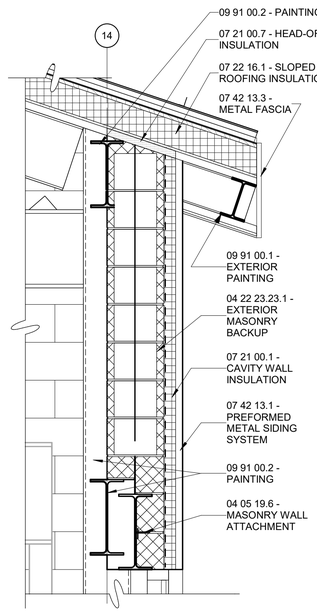

SECTION 17 (A-206)
3/4" = 1'-0"

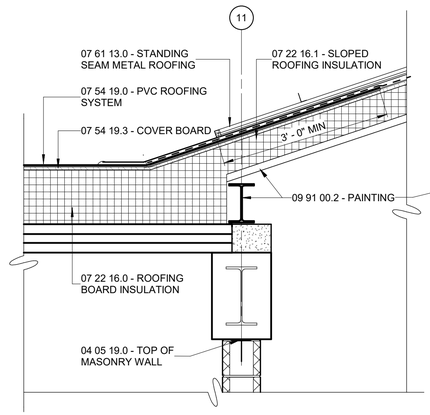

SECTION 18 (A-104)
3/4" = 1'-0"

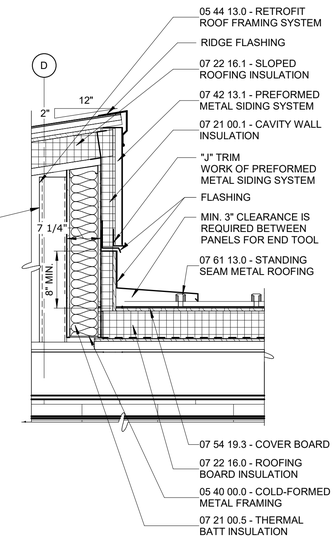

SECTION 19 (A-104)
3/4" = 1'-0"

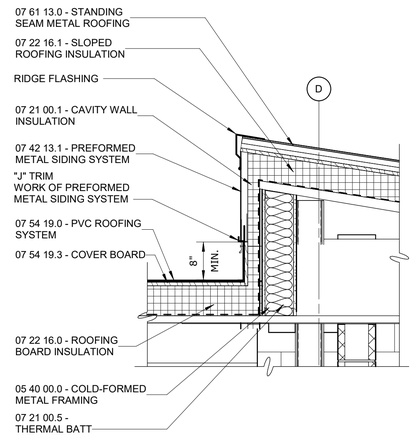

SECTION 20 (A-204)
3/4" = 1'-0"

3/4" = 1'-0" 6" 0 1 2'
1/2" = 1'-0" 12" 0 1 3'

WARNING
IT IS A VIOLATION OF SECTION 7209.2 OF THE NEW YORK STATE EDUCATION LAW FOR ANY PERSON, UNLESS ACTING UNDER THE DIRECTION OF A LICENSED PROFESSIONAL ENGINEER, TO ALTER IN ANY WAY PLANS, SPECIFICATIONS, PLATS OR REPORTS TO WHICH THE SEAL OF A PROFESSIONAL ENGINEER HAS BEEN APPLIED. IF AN ITEM BEARING THE SEAL OF A PROFESSIONAL ENGINEER IS ALTERED, THE ALTERING ENGINEER SHALL AFFIX TO THE ITEM HIS SEAL AND THE NOTATION "ALTERED BY" FOLLOWED BY HIS SIGNATURE, THE DATE, AND A SPECIFIC DESCRIPTION OF THE ALTERATION.

REV	ISSUED FOR	DATE	BY

PROJECT ENGINEER:	R. FROST
DESIGNED BY:	J. WOJCIESKI
DRAWN BY:	J.MARTINEZ
CHECKED BY:	M. STALLONE

IF THIS BAR DOES NOT MEASURE 1" THEN DRAWING IS NOT TO FULL SCALE 0 1/2" 1"

BID SET

REGISTERED ARCHITECT JENNIFER WOJCIESKI 034146 STATE OF NEW YORK

Hazen
HAZEN AND SAWYER
498 SEVENTH AVENUE, 11th FLOOR
NEW YORK, NEW YORK 10018

WESTCHESTER JOINT WATER WORKS
MAMARONECK, NY

RYE LAKE WATER FILTRATION PLANT
HARRISON, NY

FILTRATION PLANT
ARCHITECTURAL
WALL SECTION & DETAILS - SHEET 3 OF 3

DATE:	FEB 2025
HAZEN NO.:	90388-000
CONTRACT NO.:	A1364-A
DRAWING NUMBER:	A-209

Autodesk Docs://90388-000_Rye_Lake_Filtration/90388-000-WFP-A.rvt
2/19/2025 4:38:10 PM

NOTES:

1. REFER TO DRAWINGS A-005 AND A-006 IN ARCHITECTURAL DRAWING SET FOR TEXT ASSOCIATED WITH ALL NOTE TAGS.

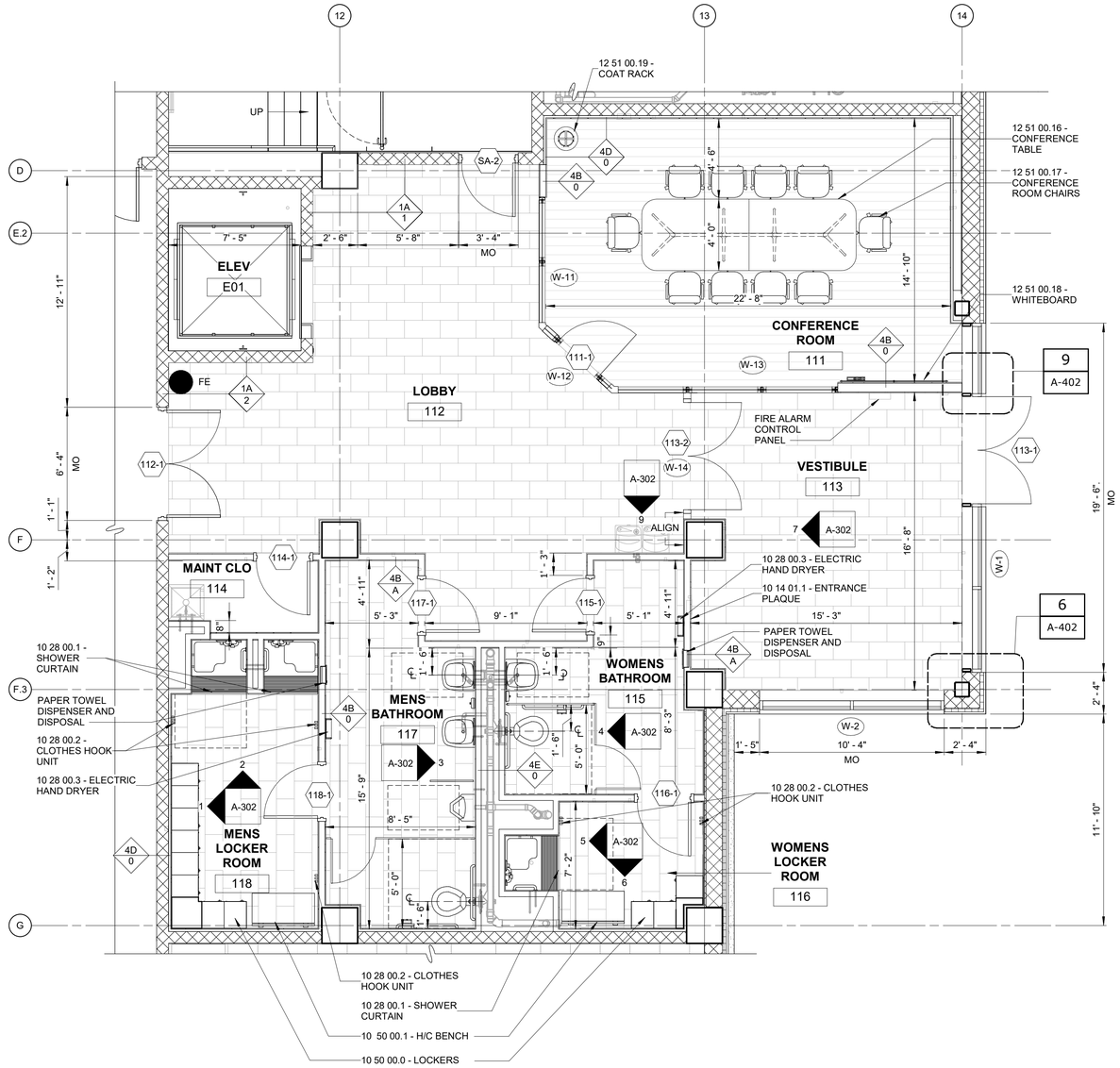

FIRST FLOOR PLAN EL 407.00 - ENLARGED PLAN

1/4" = 1'-0"

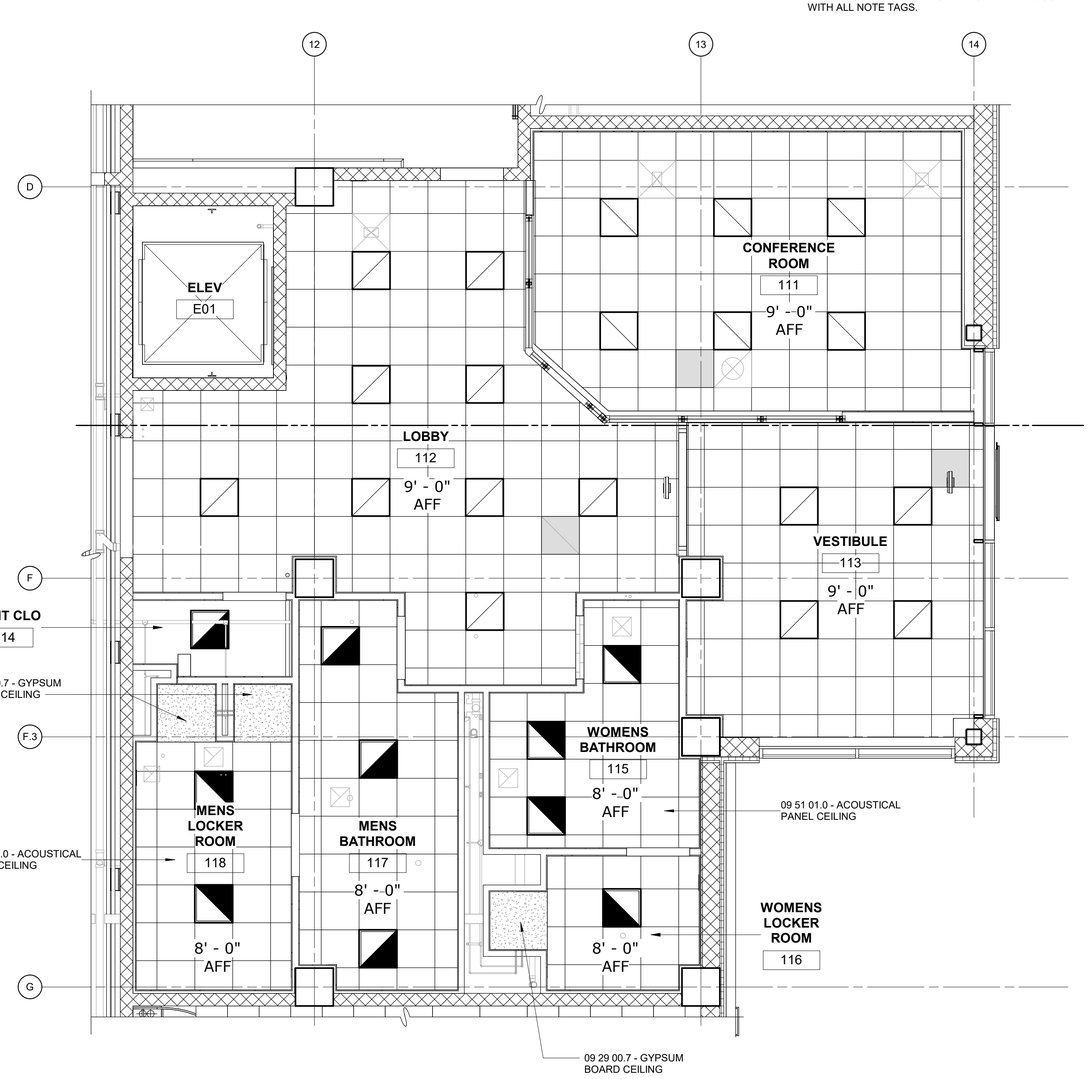

REFLECTED CEILING PLAN - FIRST FLOOR EL 407.00

1/4" = 1'-0"

RCP LEGEND:

- 2' x 2' LAY-IN ACOUSTICAL CEILING - SEE ROOM FINISH SCHEDULE FOR HEIGHT AND FINISH
- LIGHT FIXTURE, SEE ELEC DWGS, TYP
- HVAC UNIT SEE HVAC DWGS, TYP

1/4" = 1'-0" 1 0 1 2 3 7'

WARNING
IT IS A VIOLATION OF SECTION 7209.2 OF THE NEW YORK STATE EDUCATION LAW FOR ANY PERSON, UNLESS ACTING UNDER THE DIRECTION OF A LICENSED PROFESSIONAL ENGINEER, TO ALTER IN ANY WAY PLANS, SPECIFICATIONS, PLATS OR REPORTS TO WHICH THE SEAL OF A PROFESSIONAL ENGINEER HAS BEEN APPLIED. IF AN ITEM BEARING THE SEAL OF A PROFESSIONAL ENGINEER IS ALTERED, THE ALTERING ENGINEER SHALL AFFIX TO THE ITEM HIS SEAL AND THE NOTATION "ALTERED BY" FOLLOWED BY HIS SIGNATURE, THE DATE, AND A SPECIFIC DESCRIPTION OF THE ALTERATION.

REV	ISSUED FOR	DATE	BY

PROJECT ENGINEER:	R. FROST
DESIGNED BY:	J. WOJCIESKI
DRAWN BY:	J.MARTINEZ
CHECKED BY:	M. STALLONE

IF THIS BAR DOES NOT MEASURE 1" THEN DRAWING IS NOT TO FULL SCALE 0 1/2" 1"

BID SET

REGISTERED ARCHITECT JENNIFER WOJCIESKI 034146 STATE OF NEW YORK

Hazen
HAZEN AND SAWYER
498 SEVENTH AVENUE, 11th FLOOR
NEW YORK, NEW YORK 10018

WESTCHESTER JOINT WATER WORKS
MAMARONECK, NY

RYE LAKE WATER FILTRATION PLANT
HARRISON, NY

FILTRATION PLANT
ARCHITECTURAL
FIRST FLOOR - ENLARGED PLAN AND RCP

DATE:	FEB 2025
HAZEN NO.:	90388-000
CONTRACT NO.:	A1364-A
DRAWING NUMBER:	A-301

Autodesk Docs://90388-000_Rye_Lake_ Filtration/90388-000-WFP-A.rvt
2/19/2025 4:38:16 PM

NOTES:

1. REFER TO DRAWINGS A-005 AND A-006 IN ARCHITECTURAL DRAWING SET FOR TEXT ASSOCIATED WITH ALL NOTE TAGS.

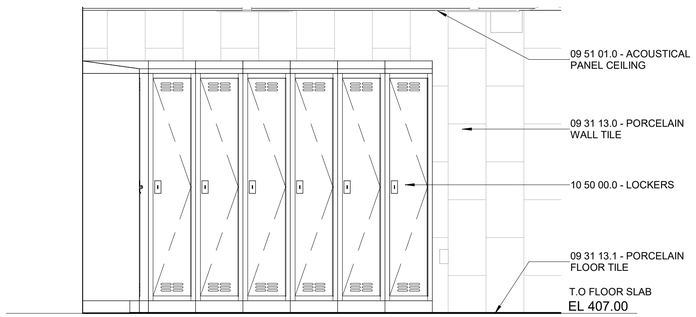

1- INTERIOR ELEVATION - MEN'S LOCKER ROOM

1/2" = 1'-0"

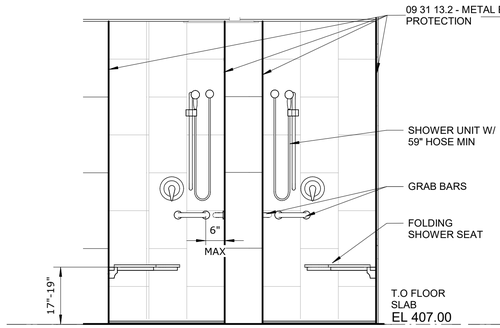

2- INTERIOR ELEVATION - MEN'S LOCKER ROOM

1/2" = 1'-0"

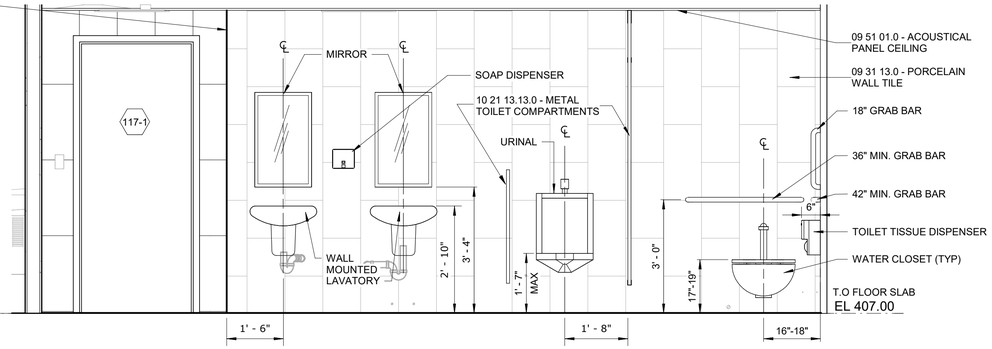

3- INTERIOR ELEVATION - MEN'S LOCKER ROOM

1/2" = 1'-0"

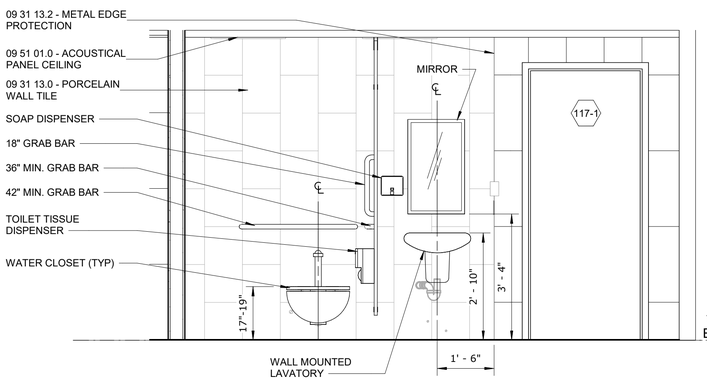

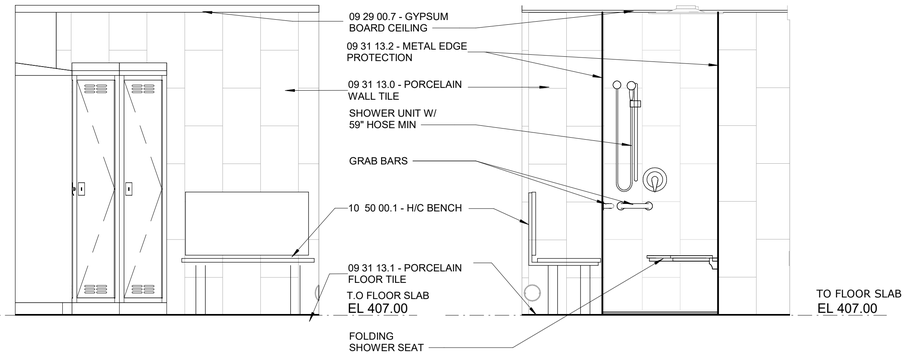

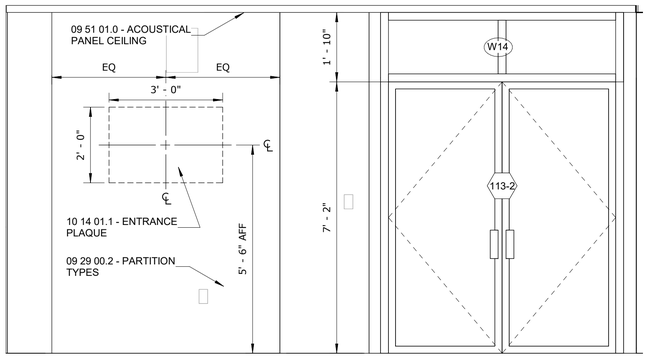

4- INTERIOR ELEVATION - WOMEN'S BATHROOM

1/2" = 1'-0"

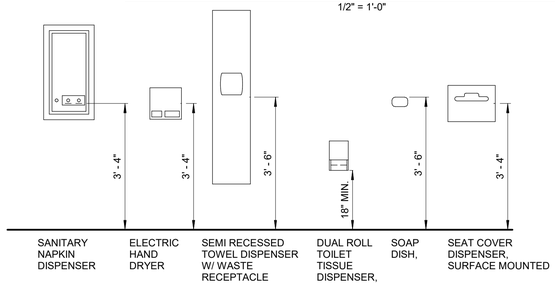

TOILET AND SHOWER ACCESSORIES

DETAIL	8
1/2" = 1'-0"	

5- INTERIOR ELEVATION - WOMEN'S BATHROOM

1/2" = 1'-0"

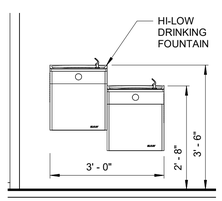

HI- LOW DRINKING FOUNTAIN

DETAIL	9
1/2" = 1'-0"	A-301

6- INTERIOR ELEVATION - WOMEN'S BATHROOM

1/2" = 1'-0"

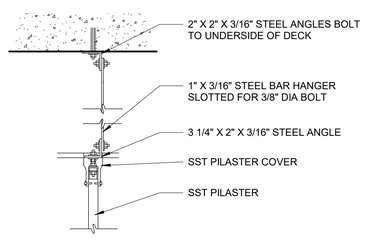

HANGING PARTITION 1

DETAIL	10
1 1/2" = 1'-0"	

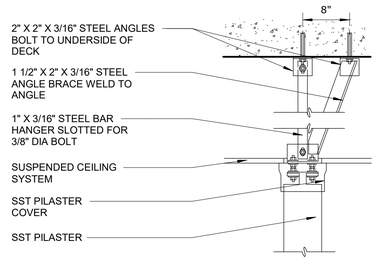

HANGING PARTITION 2

DETAIL	11
1 1/2" = 1'-0"	

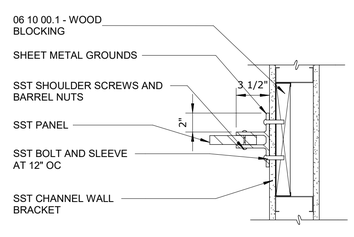

HANGING PARTITION 3

DETAIL	12
1 1/2" = 1'-0"	

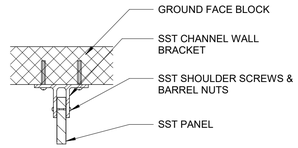

HANGING PARTITION 4

DETAIL	13
1 1/2" = 1'-0"	

1 1/2" = 1'-0" 4" 0 1'

1/2" = 1'-0" 12" 0 1 3'

WARNING
IT IS A VIOLATION OF SECTION 7209.2 OF THE NEW YORK STATE EDUCATION LAW FOR ANY PERSON, UNLESS ACTING UNDER THE DIRECTION OF A LICENSED PROFESSIONAL ENGINEER, TO ALTER IN ANY WAY PLANS, SPECIFICATIONS, PLATS OR REPORTS TO WHICH THE SEAL OF A PROFESSIONAL ENGINEER HAS BEEN APPLIED. IF AN ITEM BEARING THE SEAL OF A PROFESSIONAL ENGINEER IS ALTERED, THE ALTERING ENGINEER SHALL AFFIX TO THE ITEM HIS SEAL AND THE NOTATION "ALTERED BY" FOLLOWED BY HIS SIGNATURE, THE DATE, AND A SPECIFIC DESCRIPTION OF THE ALTERATION.

REV	ISSUED FOR	DATE	BY

PROJECT ENGINEER:	R. FROST
DESIGNED BY:	J. WOJCIESKI
DRAWN BY:	J.MARTINEZ
CHECKED BY:	M. STALLONE
IF THIS BAR DOES NOT MEASURE 1" THEN DRAWING IS NOT TO FULL SCALE	0 1/2" 1"

BID SET

REGISTERED ARCHITECT JENNIFER WOJCIESKI 034146 STATE OF NEW YORK

Hazen

HAZEN AND SAWYER
498 SEVENTH AVENUE, 11th FLOOR
NEW YORK, NEW YORK 10018

WESTCHESTER JOINT WATER WORKS
MAMARONECK, NY

RYE LAKE WATER FILTRATION PLANT
HARRISON, NY

FILTRATION PLANT
ARCHITECTURAL
FIRST FLOOR - INTERIOR ELEVATIONS

DATE:	FEB 2025
HAZEN NO.:	90388-000
CONTRACT NO.:	A1364-A
DRAWING NUMBER:	A-302

Autodesk Docs://90388-000_Rye_Lake_Filtration/90388-000-WFP-A.rvt
2/19/2025 4:38:21 PM

NOTES:

1. REFER TO DRAWINGS A-005 AND A-006 IN ARCHITECTURAL DRAWING SET FOR TEXT ASSOCIATED WITH ALL NOTE TAGS.

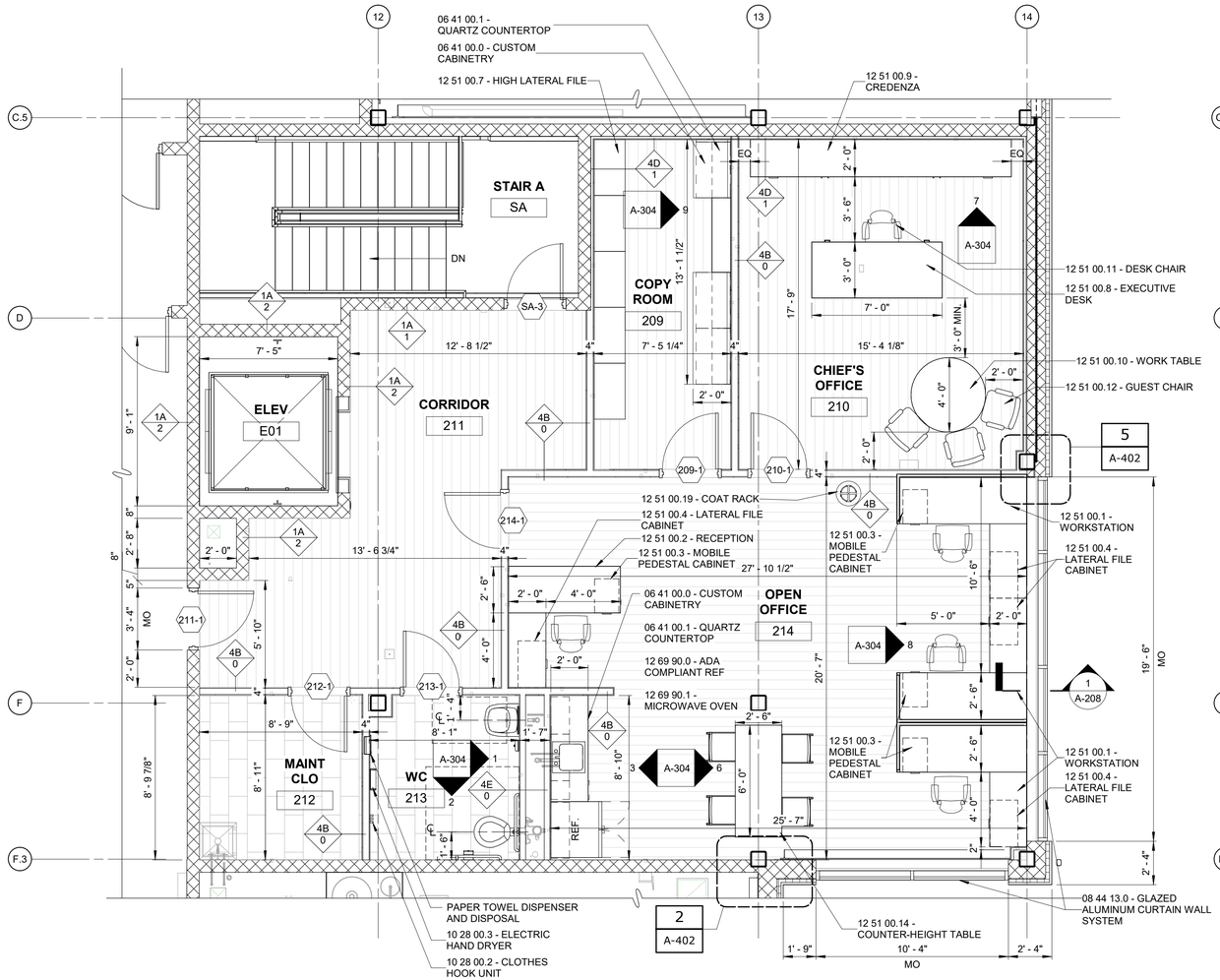

SECOND FLOOR PLAN EL 421.00 - ENLARGED PLAN

1/4" = 1'-0"

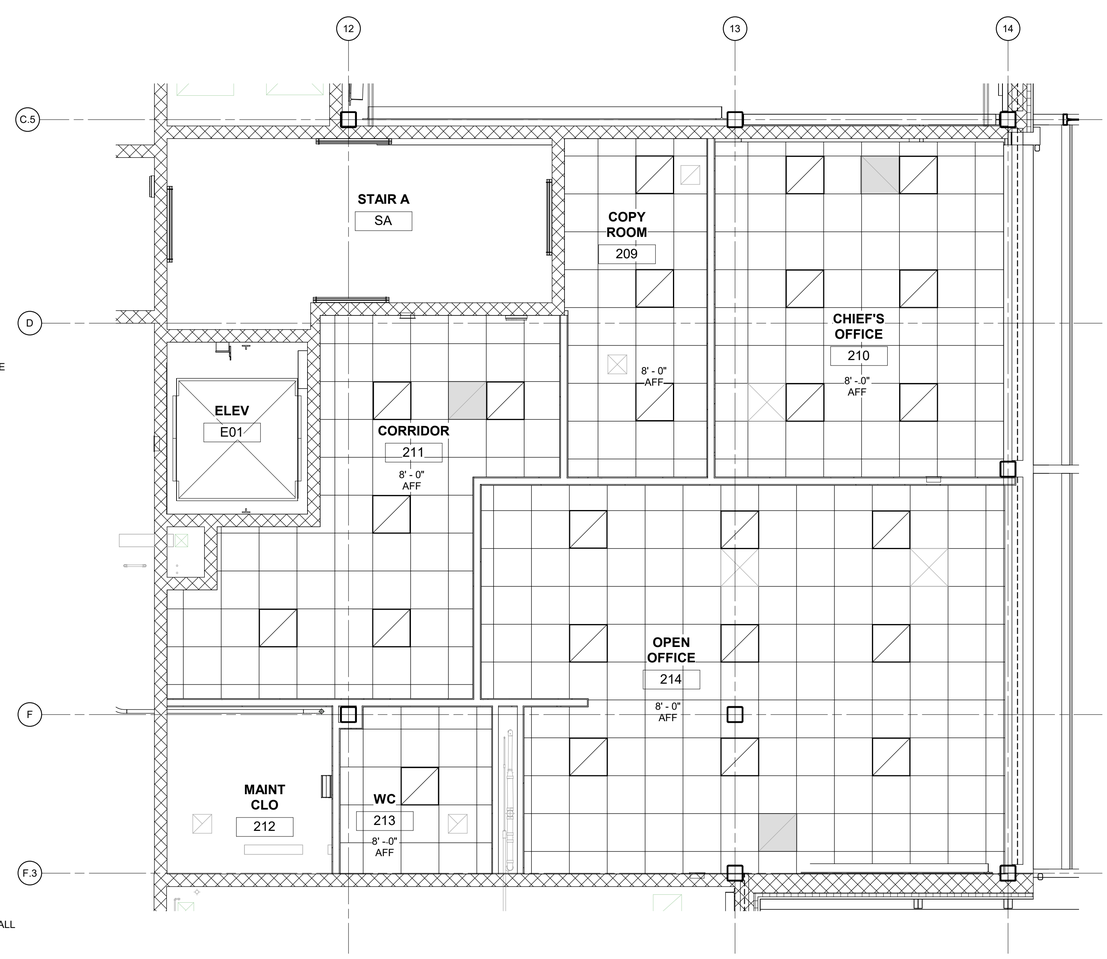

REFLECTED CEILING PLAN - EL 421.00

1/4" = 1'-0"

RCP LEGEND:

- 2' x 2' LAY-IN ACOUSTICAL CEILING - SEE ROOM FINISH SCHEDULE FOR HEIGHT AND FINISH
- LIGHT FIXTURE, SEE ELEC DWGS, TYP
- HVAC UNIT SEE HVAC DWGS, TYP

1/4" = 1'-0" 1 0 1 2 3 7'

WARNING
IT IS A VIOLATION OF SECTION 7209.2 OF THE NEW YORK STATE EDUCATION LAW FOR ANY PERSON, UNLESS ACTING UNDER THE DIRECTION OF A LICENSED PROFESSIONAL ENGINEER, TO ALTER IN ANY WAY PLANS, SPECIFICATIONS, PLATS OR REPORTS TO WHICH THE SEAL OF A PROFESSIONAL ENGINEER HAS BEEN APPLIED. IF AN ITEM BEARING THE SEAL OF A PROFESSIONAL ENGINEER IS ALTERED, THE ALTERING ENGINEER SHALL AFFIX TO THE ITEM HIS SEAL AND THE NOTATION "ALTERED BY" FOLLOWED BY HIS SIGNATURE, THE DATE, AND A SPECIFIC DESCRIPTION OF THE ALTERATION.

REV	ISSUED FOR	DATE	BY

PROJECT ENGINEER:	R. FROST
DESIGNED BY:	J. WOJCIESKI
DRAWN BY:	J.MARTINEZ
CHECKED BY:	M. STALLONE

IF THIS BAR DOES NOT MEASURE 1" THEN DRAWING IS NOT TO FULL SCALE 0 1/2" 1"

BID SET

REGISTERED ARCHITECT JENNIFER WOJCIESKI 034146 STATE OF NEW YORK

Hazen

HAZEN AND SAWYER
498 SEVENTH AVENUE, 11th FLOOR
NEW YORK, NEW YORK 10018

WESTCHESTER JOINT WATER WORKS
MAMARONECK, NY

RYE LAKE WATER FILTRATION PLANT
HARRISON, NY

FILTRATION PLANT
ARCHITECTURAL
SECOND FLOOR - ENLARGED PLAN AND RCP

DATE:	FEB 2025
HAZEN NO.:	90388-000
CONTRACT NO.:	A1364-A
DRAWING NUMBER:	A-303

Autodesk Docs://90388-000_Rye_Lake_Filtration/90388-000-WPP-A.rvt
2/19/2025 4:38:25 PM

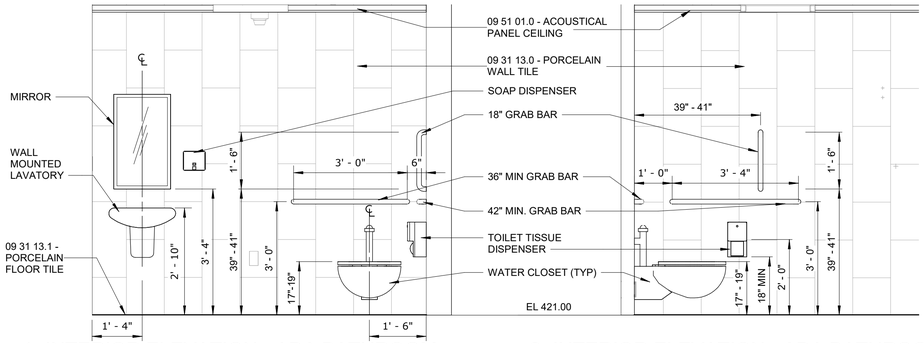

1- INTERIOR ELEVATION - ADA BATHROOM

1/2" = 1'-0"

2- INTERIOR ELEVATION - ADA BATHROOM

1/2" = 1'-0"

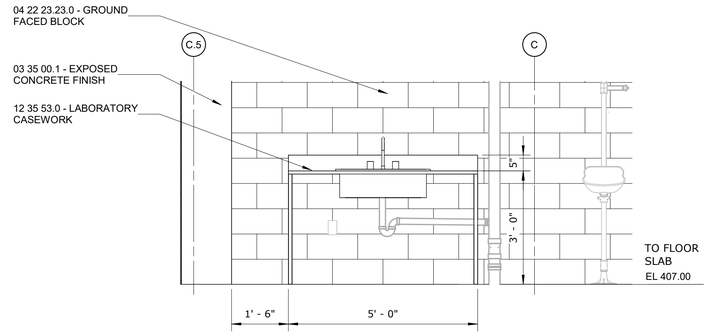

5 - INTERIOR ELEVATION - FREESTANDING LAB UNIT

1/2" = 1'-0"

NOTES:

1. REFER TO DRAWINGS A-005 AND A-006 IN ARCHITECTURAL DRAWING SET FOR TEXT ASSOCIATED WITH ALL NOTE TAGS.

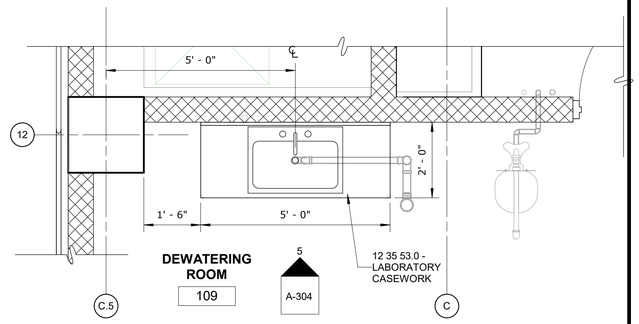

ENLARGED PLAN - FREESTANDING LAB UNIT

1/2" = 1'-0"

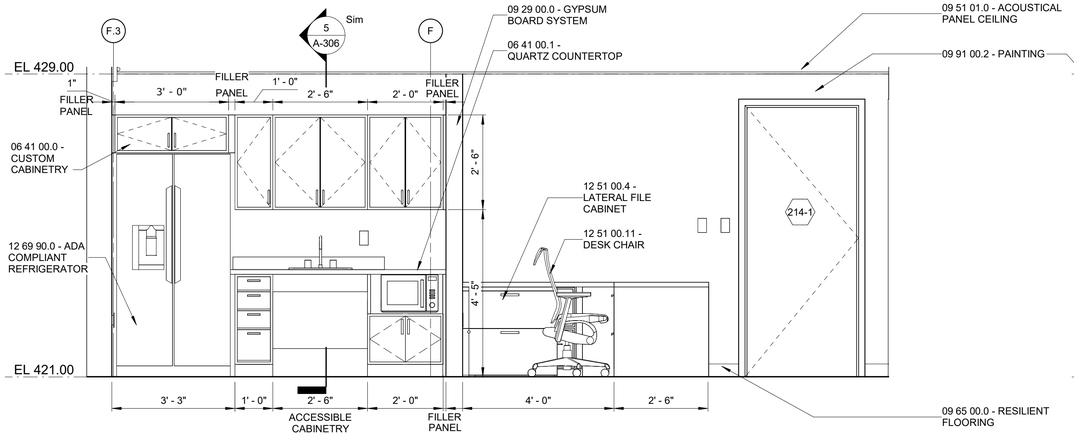

3- INTERIOR ELEVATION - KITCHENETTE

1/2" = 1'-0"

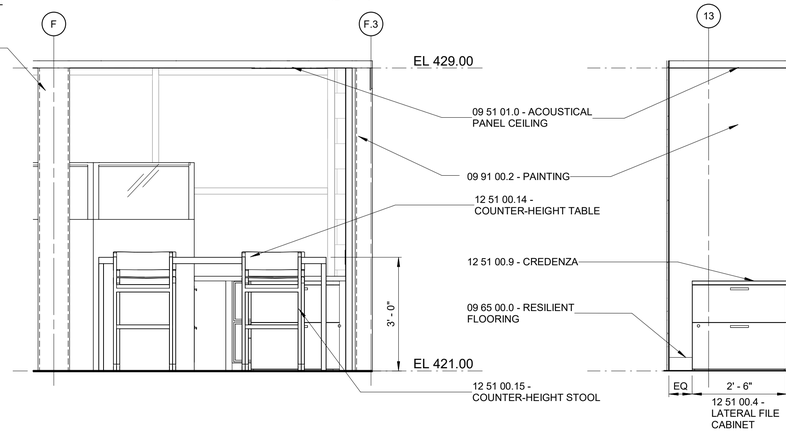

6 - INTERIOR ELEVATION

1/2" = 1'-0"

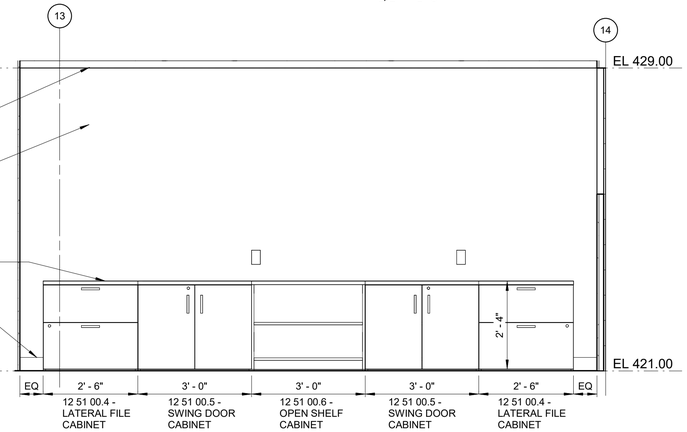

7 - CHIEF'S OFFICE

1/2" = 1'-0"

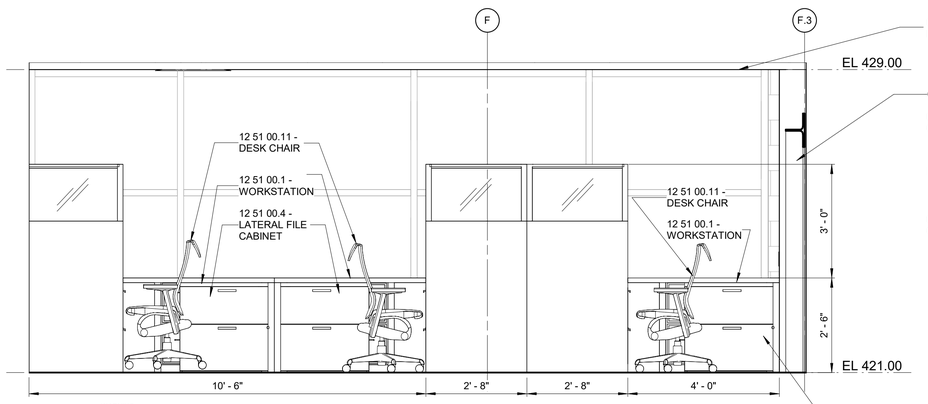

8 - OPEN OFFICE

1/2" = 1'-0"

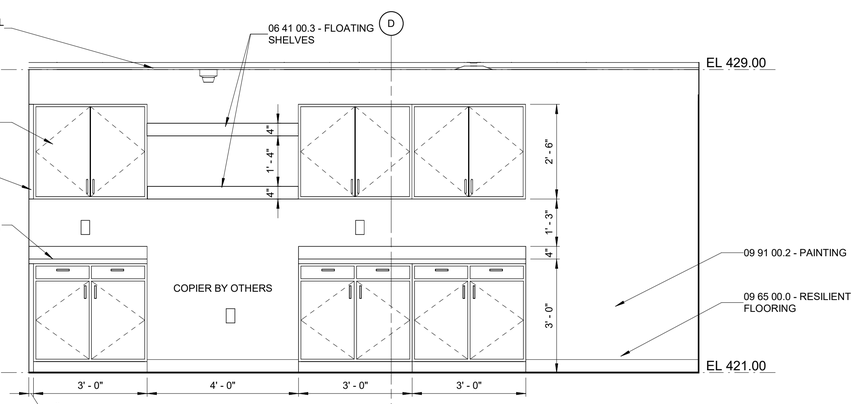

9 - COPY ROOM

1/2" = 1'-0"

WARNING
IT IS A VIOLATION OF SECTION 7209.2 OF THE NEW YORK STATE EDUCATION LAW FOR ANY PERSON, UNLESS ACTING UNDER THE DIRECTION OF A LICENSED PROFESSIONAL ENGINEER, TO ALTER IN ANY WAY PLANS, SPECIFICATIONS, PLATS OR REPORTS TO WHICH THE SEAL OF A PROFESSIONAL ENGINEER HAS BEEN APPLIED. IF AN ITEM BEARING THE SEAL OF A PROFESSIONAL ENGINEER IS ALTERED, THE ALTERING ENGINEER SHALL AFFIX TO THE ITEM HIS SEAL AND THE NOTATION "ALTERED BY" FOLLOWED BY HIS SIGNATURE, THE DATE, AND A SPECIFIC DESCRIPTION OF THE ALTERATION.

1/2" = 1'-0" (12" 0 1 3')

REV	ISSUED FOR	DATE	BY

PROJECT ENGINEER:	R. FROST
DESIGNED BY:	J. WOJCIESKI
DRAWN BY:	J.MARTINEZ
CHECKED BY:	M. STALLONE
IF THIS BAR DOES NOT MEASURE 1" THEN DRAWING IS NOT TO FULL SCALE	0 1/2" 1"

BID SET

REGISTERED ARCHITECT JENNIFER WOJCIESKI 034146 STATE OF NEW YORK

Hazen
HAZEN AND SAWYER
498 SEVENTH AVENUE, 11th FLOOR
NEW YORK, NEW YORK 10018

WESTCHESTER JOINT WATER WORKS
MAMARONECK, NY

RYE LAKE WATER FILTRATION PLANT
HARRISON, NY

FILTRATION PLANT
ARCHITECTURAL
SECOND FLOOR - INTERIOR ELEVATIONS

DATE:	FEB 2025
HAZEN NO.:	90388-000
CONTRACT NO.:	A1364-A
DRAWING NUMBER:	A-304

Autodesk Docs://90388-000_Rye_Lake_Filtration/90388-000-WFP-A.rvt
2/19/2025 4:38:32 PM

NOTES:

1. REFER TO DRAWINGS A-005 AND A-006 IN ARCHITECTURAL DRAWING SET FOR TEXT ASSOCIATED WITH ALL NOTE TAGS.

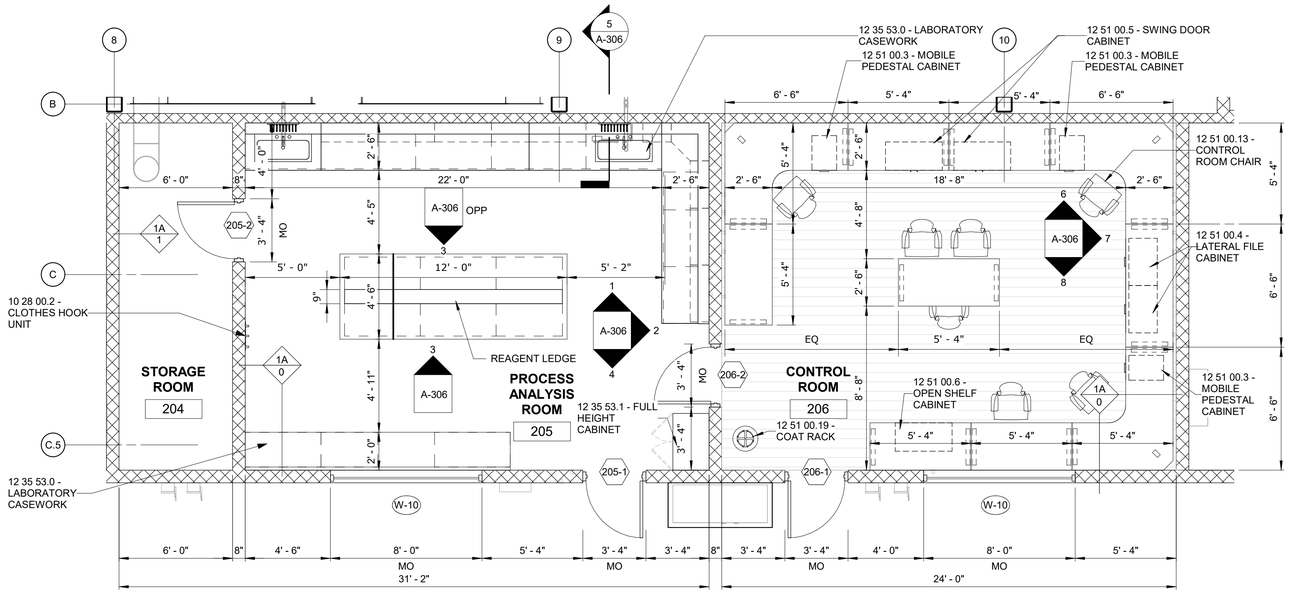

ENLARGED PLAN

1/4" = 1'-0"

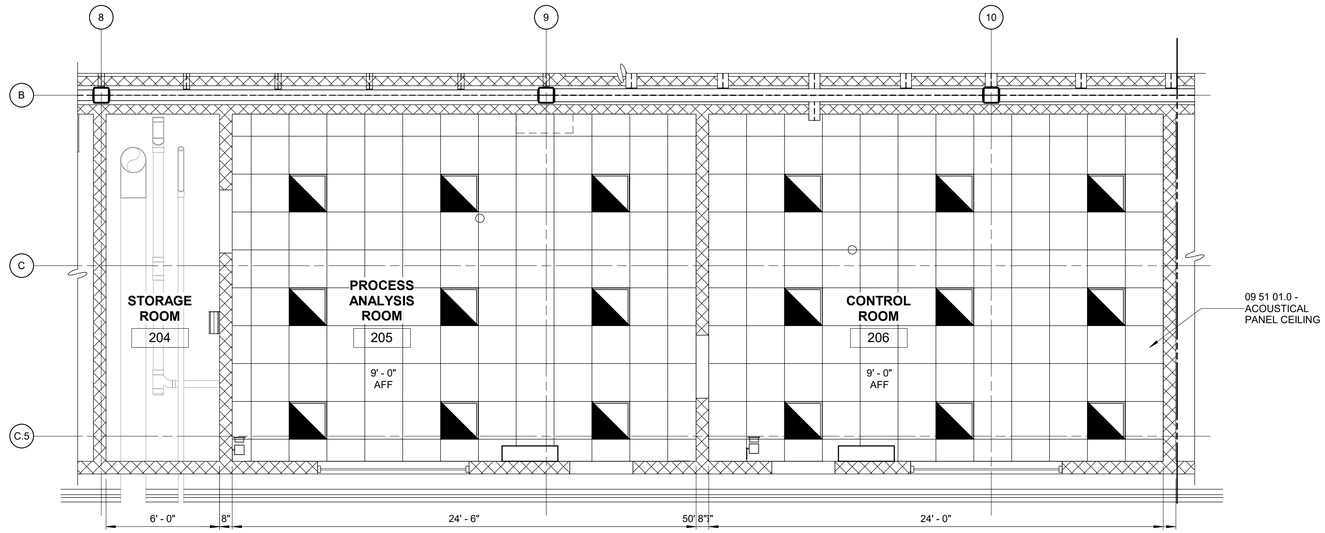

REFLECTED CEILING PLAN - EL 421.00

1/4" = 1'-0"

RCP LEGEND:

- 2' x 2' LAY-IN ACOUSTICAL CEILING - SEE ROOM FINISH SCHEDULE FOR HEIGHT AND FINISH
- LIGHT FIXTURE, SEE ELEC DWGS, TYP
- HVAC UNIT SEE HVAC DWGS, TYP

1/4" = 1'-0" (1 0 1 2 3 7')

WARNING
IT IS A VIOLATION OF SECTION 7209.2 OF THE NEW YORK STATE EDUCATION LAW FOR ANY PERSON, UNLESS ACTING UNDER THE DIRECTION OF A LICENSED PROFESSIONAL ENGINEER, TO ALTER IN ANY WAY PLANS, SPECIFICATIONS, PLATS OR REPORTS TO WHICH THE SEAL OF A PROFESSIONAL ENGINEER HAS BEEN APPLIED. IF AN ITEM BEARING THE SEAL OF A PROFESSIONAL ENGINEER IS ALTERED, THE ALTERING ENGINEER SHALL AFFIX TO THE ITEM HIS SEAL AND THE NOTATION "ALTERED BY" FOLLOWED BY HIS SIGNATURE, THE DATE, AND A SPECIFIC DESCRIPTION OF THE ALTERATION.

REV	ISSUED FOR	DATE	BY

PROJECT ENGINEER:	R. FROST
DESIGNED BY:	J. WOJCIESKI
DRAWN BY:	J.MARTINEZ
CHECKED BY:	M. STALLONE
IF THIS BAR DOES NOT MEASURE 1" THEN DRAWING IS NOT TO FULL SCALE	0 1/2" 1"

BID SET

REGISTERED ARCHITECT JENNIFER WOJCIESKI 034146 STATE OF NEW YORK

Hazen
HAZEN AND SAWYER
498 SEVENTH AVENUE, 11th FLOOR
NEW YORK, NEW YORK 10018

WESTCHESTER JOINT WATER WORKS
MAMARONECK, NY

RYE LAKE WATER FILTRATION PLANT
HARRISON, NY

FILTRATION PLANT
ARCHITECTURAL
PROCESS ANALYSIS AND CONTROL ROOM - ENLARGED PLANS AND RCP

DATE:	FEB 2025
HAZEN NO.:	90388-000
CONTRACT NO.:	A1364-A
DRAWING NUMBER:	A-305

Autodesk Docs://90388-000_Rye_Lake_Filtration/90388-000-WFP-A.rvt
2/19/2025 4:38:34 PM

NOTES:

1. REFER TO DRAWINGS A-005 AND A-006 IN ARCHITECTURAL DRAWING SET FOR TEXT ASSOCIATED WITH ALL NOTE TAGS.

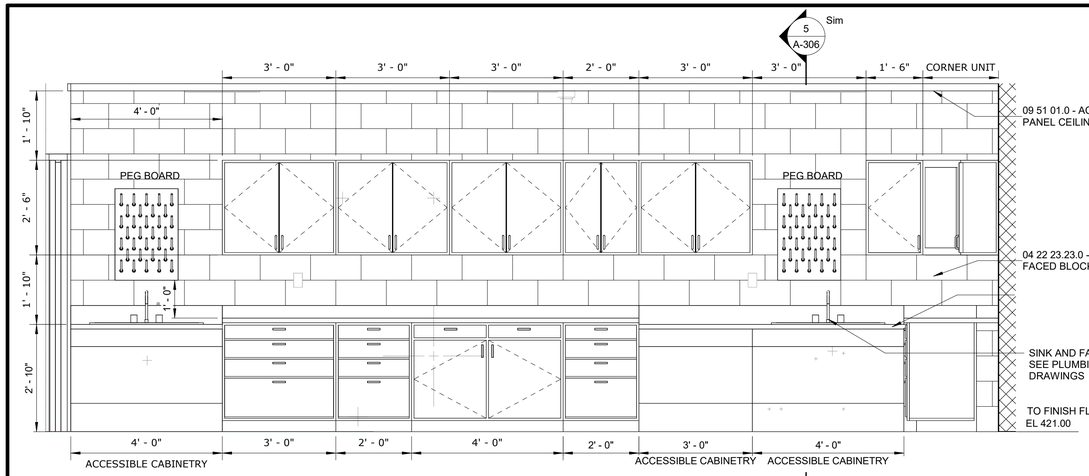

1- INTERIOR ELEVATION - PROCESS ANALYSIS ROOM

1/2" = 1'-0"

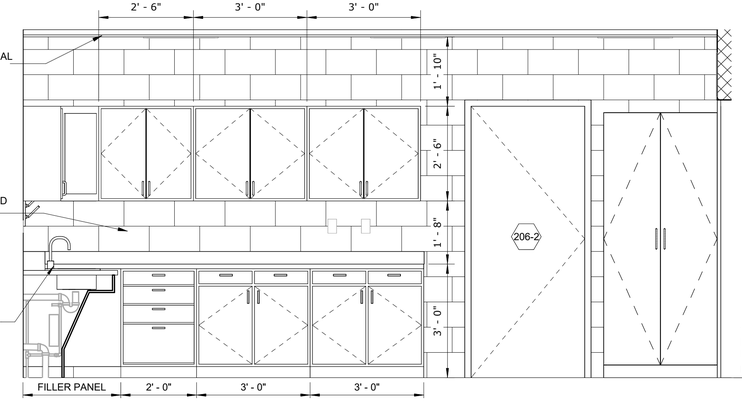

2- INTERIOR ELEVATION - PROCESS ANALYSIS ROOM

1/2" = 1'-0"

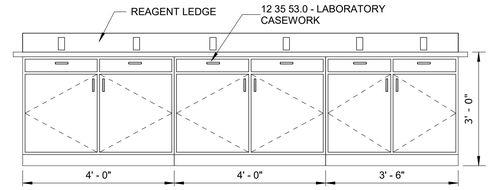

3- INTERIOR ELEVATION - PROCESS ANALYSIS ROOM

1/2" = 1'-0"

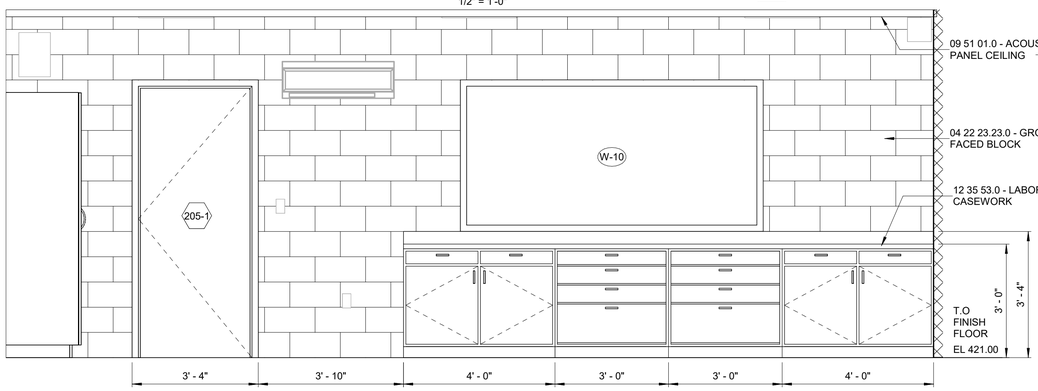

4- INTERIOR ELEVATION - PROCESS ANALYSIS ROOM

1/2" = 1'-0"

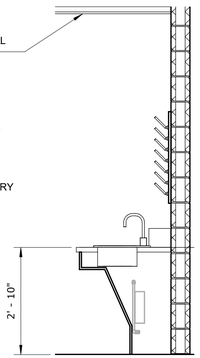

SECTION 5 / A-304

1/2" = 1'-0"

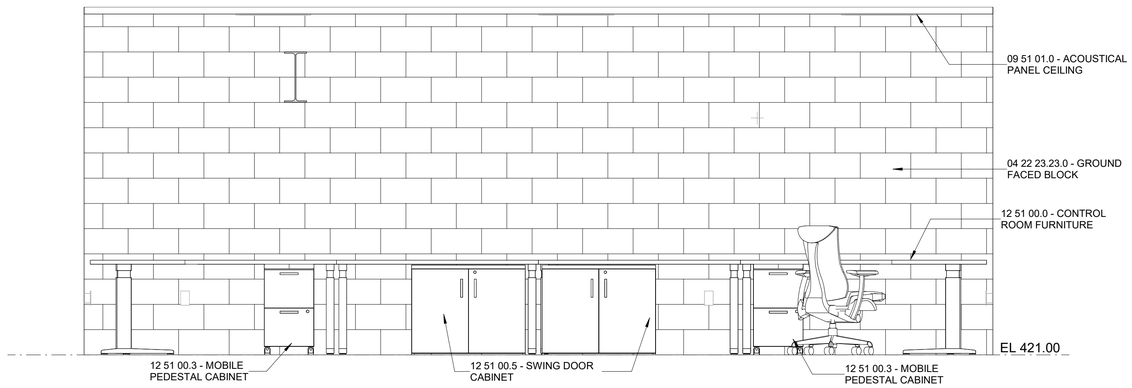

6- INTERIOR ELEVATION - CONTROL ROOM

1/2" = 1'-0"

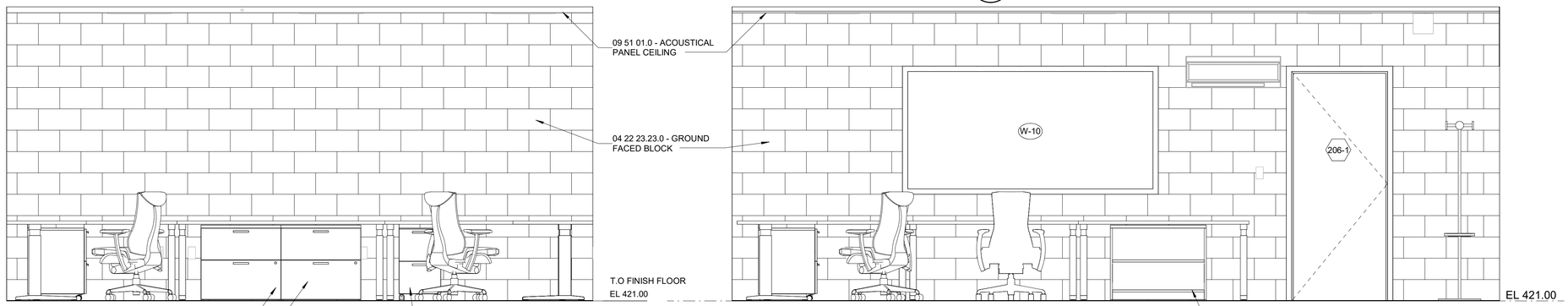

7- INTERIOR ELEVATION - CONTROL ROOM

1/2" = 1'-0"

8- INTERIOR ELEVATION - CONTROL ROOM

1/2" = 1'-0"

1/2" = 1'-0" 12" 0 1 3'

WARNING
IT IS A VIOLATION OF SECTION 7209.2 OF THE NEW YORK STATE EDUCATION LAW FOR ANY PERSON, UNLESS ACTING UNDER THE DIRECTION OF A LICENSED PROFESSIONAL ENGINEER, TO ALTER IN ANY WAY PLANS, SPECIFICATIONS, PLATS OR REPORTS TO WHICH THE SEAL OF A PROFESSIONAL ENGINEER HAS BEEN APPLIED. IF AN ITEM BEARING THE SEAL OF A PROFESSIONAL ENGINEER IS ALTERED, THE ALTERING ENGINEER SHALL AFFIX TO THE ITEM HIS SEAL AND THE NOTATION "ALTERED BY" FOLLOWED BY HIS SIGNATURE, THE DATE, AND A SPECIFIC DESCRIPTION OF THE ALTERATION.

REV	ISSUED FOR	DATE	BY

PROJECT ENGINEER:	R. FROST
DESIGNED BY:	J. WOJCIESKI
DRAWN BY:	J.MARTINEZ
CHECKED BY:	M. STALLONE
IF THIS BAR DOES NOT MEASURE 1" THEN DRAWING IS NOT TO FULL SCALE	0 1/2" 1"

BID SET

REGISTERED ARCHITECT JENNIFER WOJCIESKI 034146 STATE OF NEW YORK

Hazen

HAZEN AND SAWYER
498 SEVENTH AVENUE, 11th FLOOR
NEW YORK, NEW YORK 10018

WESTCHESTER JOINT WATER WORKS
MAMARONECK, NY

RYE LAKE WATER FILTRATION PLANT
HARRISON, NY

FILTRATION PLANT
ARCHITECTURAL
PROCESS ANALYSIS AND CONTROL ROOM - INTERIOR ELEVATIONS

DATE:	FEB 2025
HAZEN NO.:	90388-000
CONTRACT NO.:	A1364-A
DRAWING NUMBER:	A-306

Autodesk Docs://90388-000_Rye_Lake_Filtration/90388-000-WFP-A.rvt
2/19/2025 4:38:40 PM

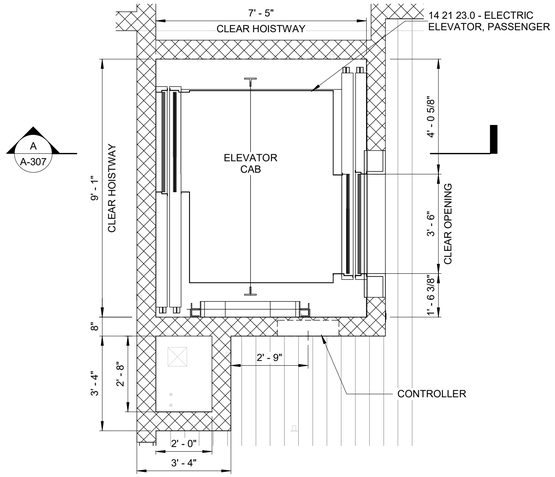

ELEVATOR PLAN - EL 421.00

3/8" = 1'-0"

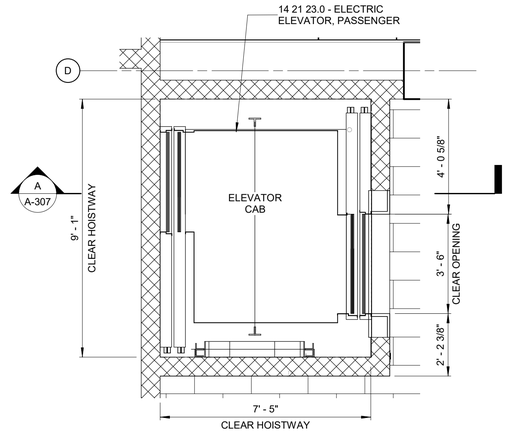

ELEVATOR PLAN - EL 407.00

3/8" = 1'-0"

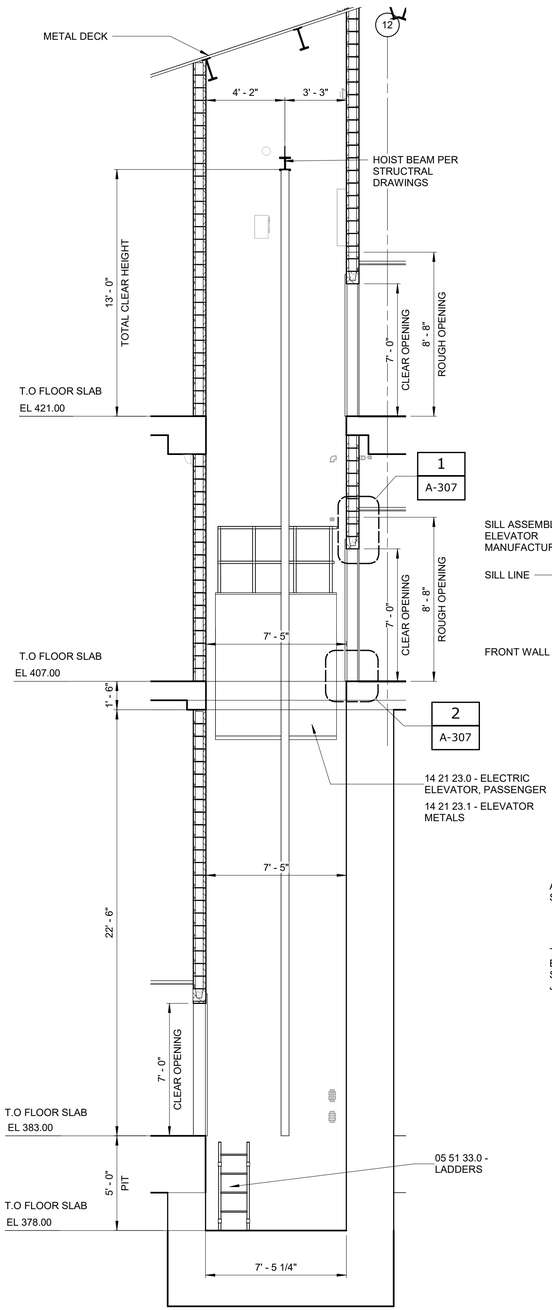

SECTION A / A-307

1/4" = 1'-0"

NOTES:

1. REFER TO DRAWINGS A-005 AND A-006 IN ARCHITECTURAL DRAWING SET FOR TEXT ASSOCIATED WITH ALL NOTE TAGS.

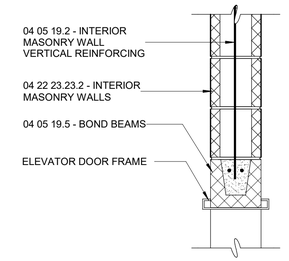

ELEVATOR HEAD

DETAIL 1 / A-307

1" = 1'-0"

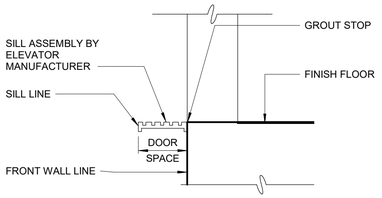

ELEVATOR SILL

DETAIL 2 / A-307

1" = 1'-0"

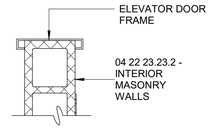

JAMB DETAIL

DETAIL 3 / A-307

1" = 1'-0"

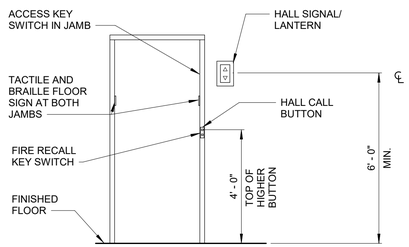

ELEVATOR HALL FIXTURE LOCATION

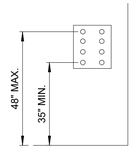

CAR CONTROL HEIGHT

NOTE:
1. ELEVATOR MANUF. SHALL PROVIDE HALL SIGNAL LANTERNS, HALL CALL BUTTONS, TACTILE BRAILLE FLOOR SIGNS (@ BOTH JAMBS) AT ALL STOPS AND VERIFY MOUNTING LOCATIONS AND HEIGHTS TO MEET ICC/ANSI A117.1.

ELEVATOR HALL DETAILS

3/8" = 1'-0"

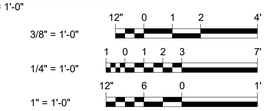

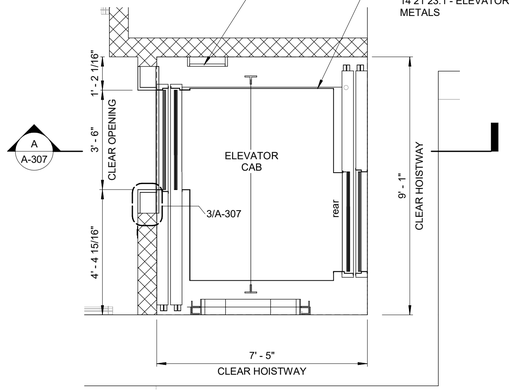

ELEVATOR PLAN - EL 383.00

3/8" = 1'-0"

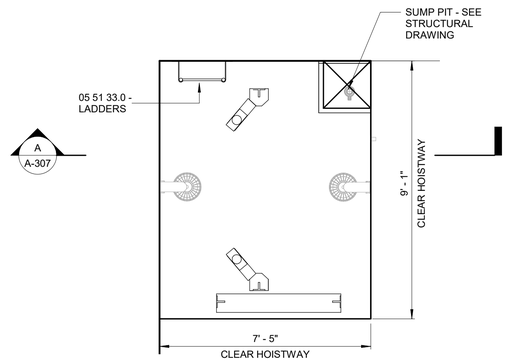

ELEVATOR PLAN - EL 378.00

3/8" = 1'-0"

WARNING
IT IS A VIOLATION OF SECTION 7209.2 OF THE NEW YORK STATE EDUCATION LAW FOR ANY PERSON, UNLESS ACTING UNDER THE DIRECTION OF A LICENSED PROFESSIONAL ENGINEER, TO ALTER IN ANY WAY PLANS, SPECIFICATIONS, PLATS OR REPORTS TO WHICH THE SEAL OF A PROFESSIONAL ENGINEER HAS BEEN AFFIXED. IF AN ITEM BEARING THE SEAL OF A PROFESSIONAL ENGINEER IS ALTERED, THE ALTERING ENGINEER SHALL AFFIX TO THE ITEM HIS SEAL AND THE NOTATION "ALTERED BY" FOLLOWED BY HIS SIGNATURE, THE DATE, AND A SPECIFIC DESCRIPTION OF THE ALTERATION.

REV	ISSUED FOR	DATE	BY

PROJECT ENGINEER:	R. FROST
DESIGNED BY:	J. WOJCIESKI
DRAWN BY:	J.MARTINEZ
CHECKED BY:	M. STALLONE
IF THIS BAR DOES NOT MEASURE 1" THEN DRAWING IS NOT TO FULL SCALE	0 1/2" 1"

BID SET

REGISTERED ARCHITECT JENNIFER WOJCIESKI 034146 STATE OF NEW YORK

Hazen

HAZEN AND SAWYER
498 SEVENTH AVENUE, 11th FLOOR
NEW YORK, NEW YORK 10018

WESTCHESTER JOINT WATER WORKS
MAMARONECK, NY

RYE LAKE WATER FILTRATION PLANT
HARRISON, NY

FILTRATION PLANT
ARCHITECTURAL
ELEVATOR PLANS, SECTION AND DETAILS

DATE:	FEB 2025
HAZEN NO.:	90388-000
CONTRACT NO.:	A1364-A
DRAWING NUMBER:	A-307

Autodesk Docs://90388-000_Rye_Lake_Filtration/90388-000-WFP-A.rvt
2/19/2025 4:38:46 PM

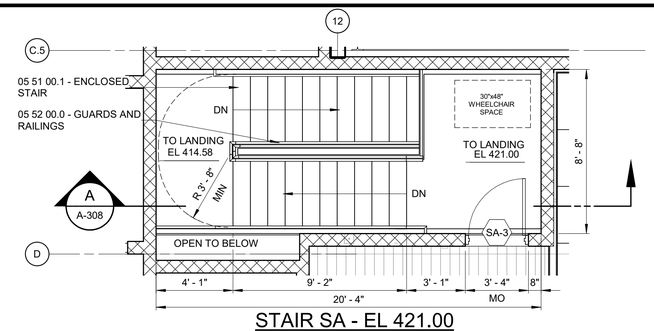

STAIR SA - EL 421.00

1/4" = 1'-0"

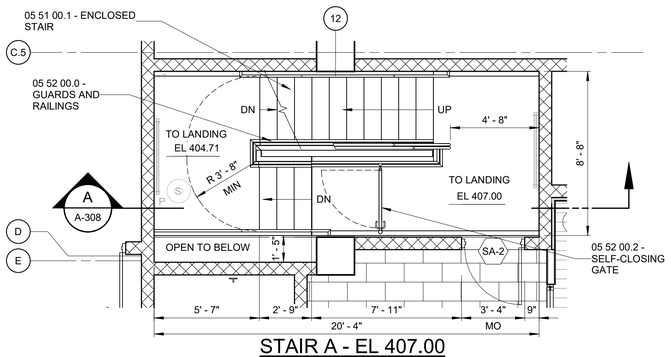

STAIR A - EL 407.00

1/4" = 1'-0"

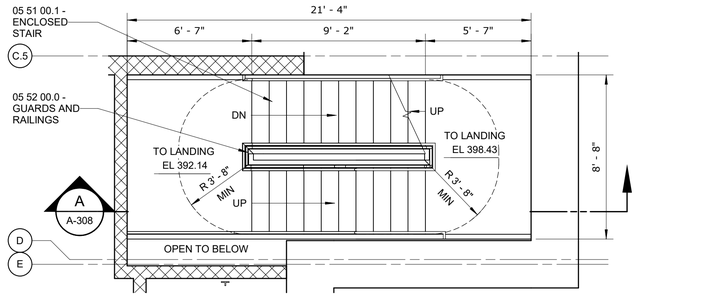

STAIR A - EL 395.00

1/4" = 1'-0"

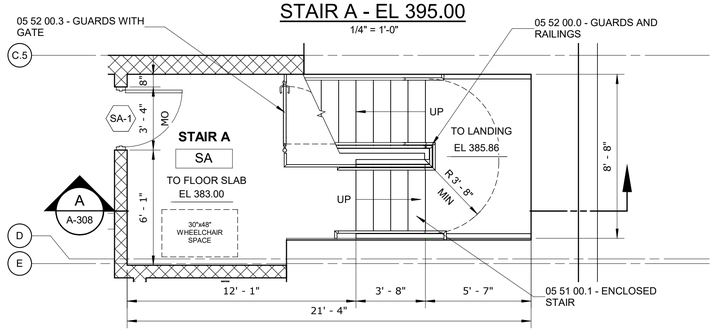

STAIR A - EL 383.00

1/4" = 1'-0"

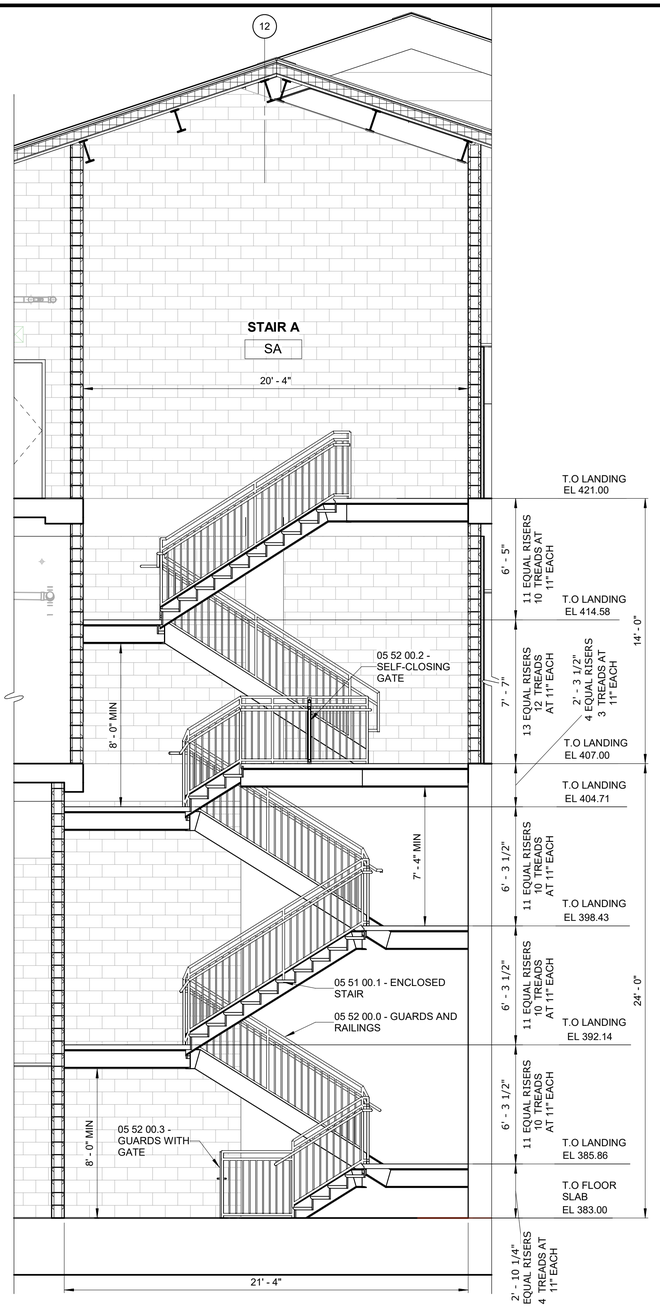

STAIR A

SECTION A / A-308

1/4" = 1'-0"

NOTES:

1. REFER TO DRAWINGS A-005 AND A-006 IN ARCHITECTURAL DRAWING SET FOR TEXT ASSOCIATED WITH ALL NOTE TAGS.

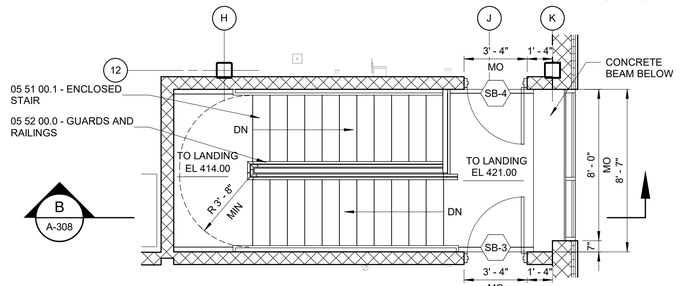

STAIR S03 - EL 421.00

1/4" = 1'-0"

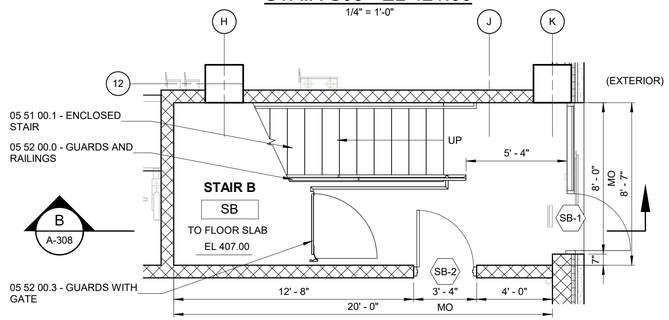

STAIR B - EL 407.00

1/4" = 1'-0"

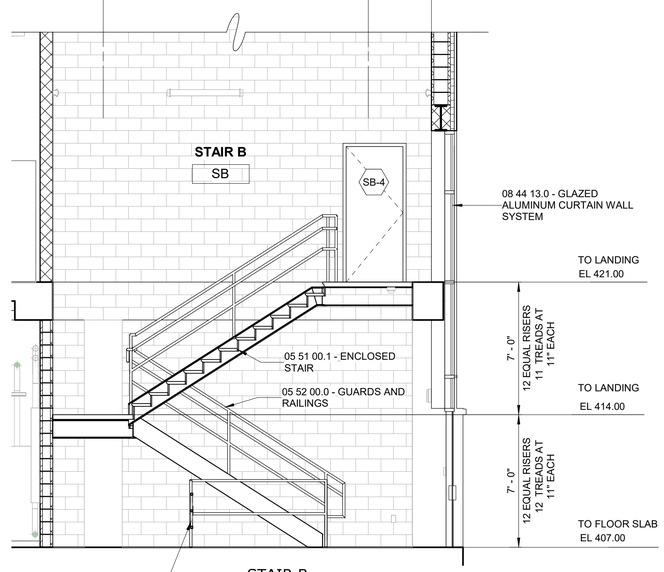

STAIR B

SECTION B / A-308

1/4" = 1'-0"

1/4" = 1'-0"

1 0 1 2 3 7'

WARNING
IT IS A VIOLATION OF SECTION 7209.2 OF THE NEW YORK STATE EDUCATION LAW FOR ANY PERSON, UNLESS ACTING UNDER THE DIRECTION OF A LICENSED PROFESSIONAL ENGINEER, TO ALTER IN ANY WAY PLANS, SPECIFICATIONS, PLATS OR REPORTS TO WHICH THE SEAL OF A PROFESSIONAL ENGINEER HAS BEEN APPLIED. IF AN ITEM BEARING THE SEAL OF A PROFESSIONAL ENGINEER IS ALTERED, THE ALTERING ENGINEER SHALL AFFIX TO THE ITEM HIS SEAL AND THE NOTATION "ALTERED BY" FOLLOWED BY HIS SIGNATURE, THE DATE, AND A SPECIFIC DESCRIPTION OF THE ALTERATION.

REV	ISSUED FOR	DATE	BY

PROJECT ENGINEER:	R. FROST
DESIGNED BY:	J. WOJCIESKI
DRAWN BY:	J.MARTINEZ
CHECKED BY:	M. STALLONE

IF THIS BAR DOES NOT MEASURE 1" THEN DRAWING IS NOT TO FULL SCALE 0 1/2" 1"

BID SET

REGISTERED ARCHITECT JENNIFER WOJCIESKI 034146 STATE OF NEW YORK

Hazen

HAZEN AND SAWYER
498 SEVENTH AVENUE, 11th FLOOR
NEW YORK, NEW YORK 10018

WESTCHESTER JOINT WATER WORKS
MAMARONECK, NY

RYE LAKE WATER FILTRATION PLANT
HARRISON, NY

FILTRATION PLANT
ARCHITECTURAL
STAIR PLANS, SECTIONS AND DETAILS - SHEET 1 OF 2

DATE:	FEB 2025
HAZEN NO.:	90388-000
CONTRACT NO.:	A1364-A
DRAWING NUMBER:	A-308

Autodesk Docs://90388-000_Rye_Lake_Filtration/90388-000-WFP-A.rvt
2/19/2025 4:38:52 PM

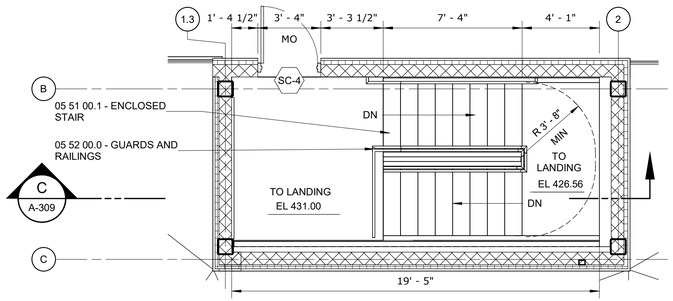

STAIR C - EL 431.00

1/4" = 1'-0"

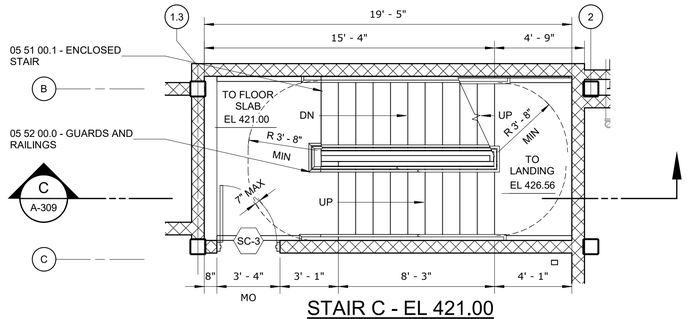

STAIR C - EL 421.00

1/4" = 1'-0"

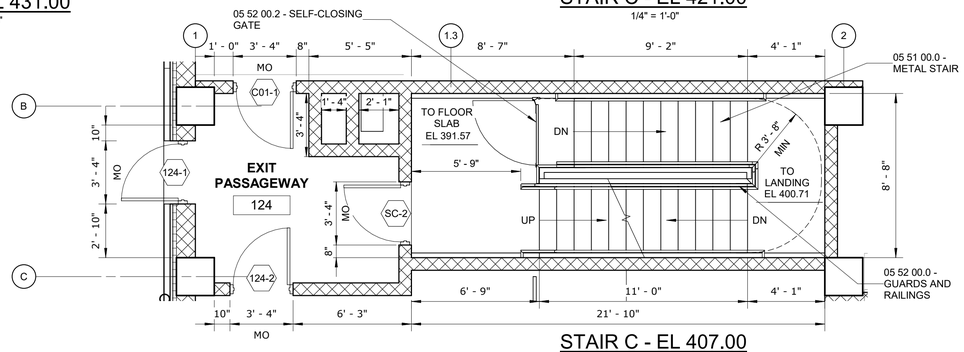

STAIR C - EL 407.00

1/4" = 1'-0"

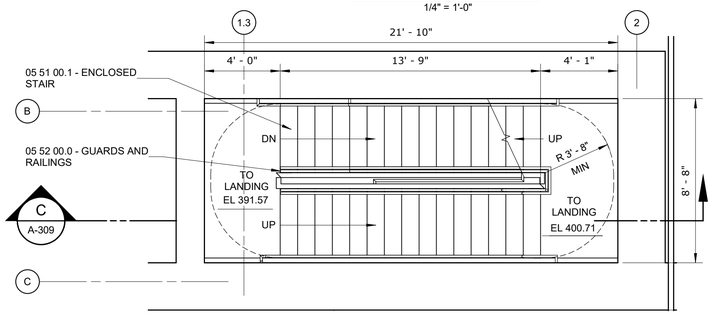

STAIR C - EL 391.00

1/4" = 1'-0"

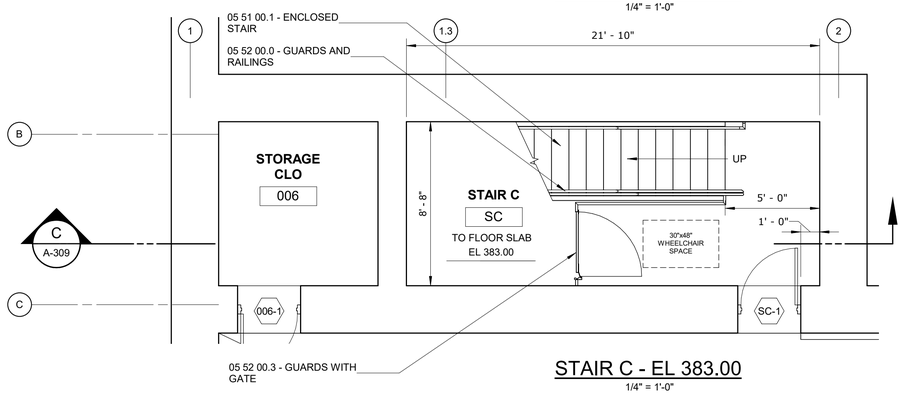

STAIR C - EL 383.00

1/4" = 1'-0"

NOTES:

1. REFER TO DRAWINGS A-005 AND A-006 IN ARCHITECTURAL DRAWING SET FOR TEXT ASSOCIATED WITH ALL NOTE TAGS.

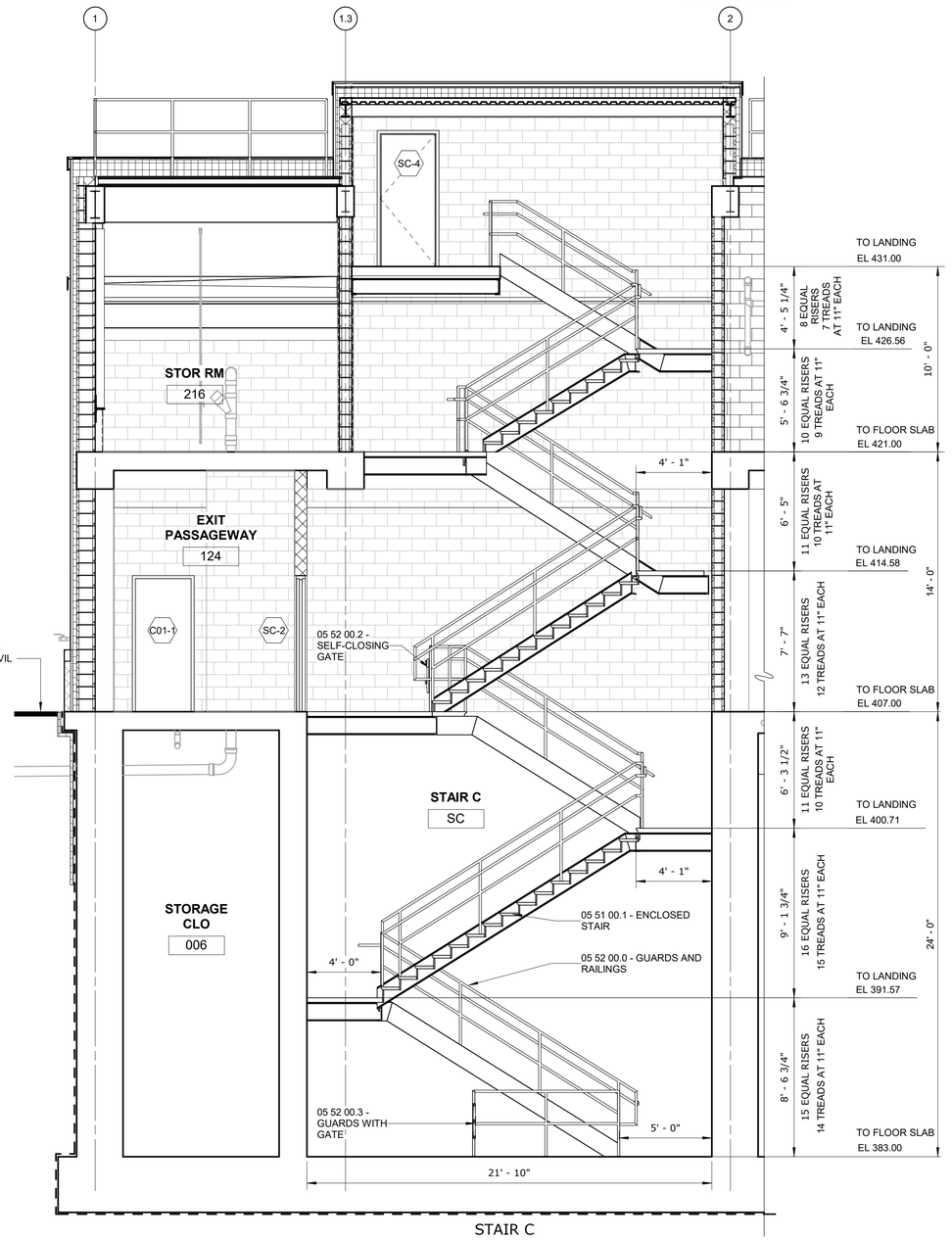

STAIR C

SECTION C / A-309

1/4" = 1'-0"

1/4" = 1'-0"

1 0 1 2 3 7'

WARNING
IT IS A VIOLATION OF SECTION 7209.2 OF THE NEW YORK STATE EDUCATION LAW FOR ANY PERSON, UNLESS ACTING UNDER THE DIRECTION OF A LICENSED PROFESSIONAL ENGINEER, TO ALTER IN ANY WAY PLANS, SPECIFICATIONS, PLATS OR REPORTS TO WHICH THE SEAL OF A PROFESSIONAL ENGINEER HAS BEEN APPLIED. IF AN ITEM BEARING THE SEAL OF A PROFESSIONAL ENGINEER IS ALTERED, THE ALTERING ENGINEER SHALL AFFIX TO THE ITEM HIS SEAL AND THE NOTATION "ALTERED BY" FOLLOWED BY HIS SIGNATURE, THE DATE, AND A SPECIFIC DESCRIPTION OF THE ALTERATION.

REV	ISSUED FOR	DATE	BY

PROJECT ENGINEER:	R. FROST
DESIGNED BY:	J. WOJCIESKI
DRAWN BY:	J.MARTINEZ
CHECKED BY:	M. STALLONE

IF THIS BAR DOES NOT MEASURE 1" THEN DRAWING IS NOT TO FULL SCALE 0 1/2" 1"

BID SET

REGISTERED ARCHITECT JENNIFER WOJCIESKI 034146 STATE OF NEW YORK

Hazen

HAZEN AND SAWYER
498 SEVENTH AVENUE, 11th FLOOR
NEW YORK, NEW YORK 10018

WESTCHESTER JOINT WATER WORKS
MAMARONECK, NY

RYE LAKE WATER FILTRATION PLANT
HARRISON, NY

FILTRATION PLANT
ARCHITECTURAL
STAIR PLANS, SECTIONS AND DETAILS - SHEET 2 OF 2

DATE:	FEB 2025
HAZEN NO.:	90388-000
CONTRACT NO.:	A1364-A
DRAWING NUMBER:	A-309

Autodesk Docs://90388-000_Rye_Lake_Filtration/90388-000-WFP-A.rvt
2/19/2025 4:38:57 PM

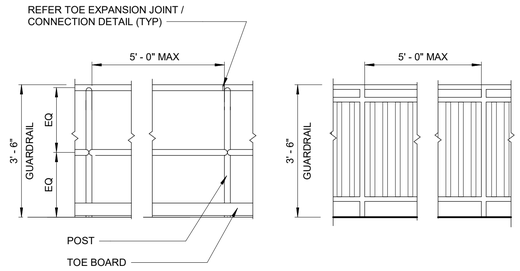

ELEVATION GUARDRAIL

DETAIL	1
1/2" = 1'-0"	

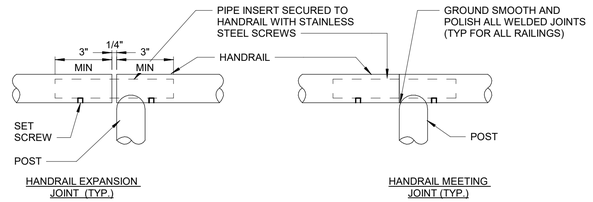

HANDRAIL JOINT

DETAIL	2
3" = 1'-0"	A-104

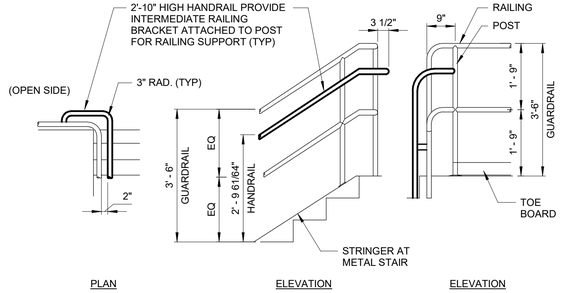

GUARDRAIL TO HANDRAIL "L" RETURN (OPN SIDE)

DETAIL	3
1/2" = 1'-0"	

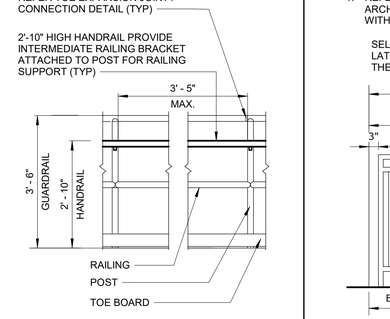

ELEVATION HANDRAIL AT LANDING

DETAIL	4
1/2" = 1'-0"	

NOTES:

1. REFER TO DRAWINGS A-005 AND A-006 IN ARCHITECTURAL DRAWING SET FOR TEXT ASSOCIATED WITH ALL NOTE TAGS.

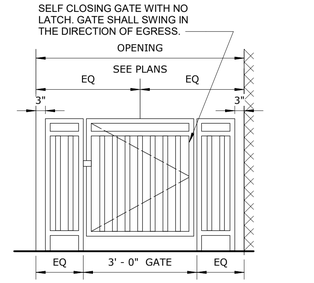

TYPE II RAILING GATE

DETAIL	13
1/2" = 1'-0"	

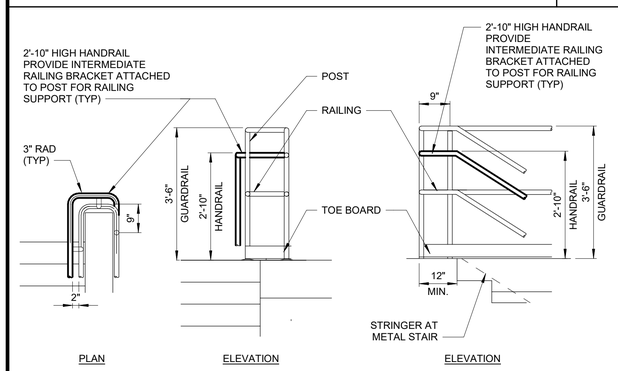

GUARDRAIL TO HANDRAIL "U" RETURN (OPP SIDE)

DETAIL	5
1/2" = 1'-0"	

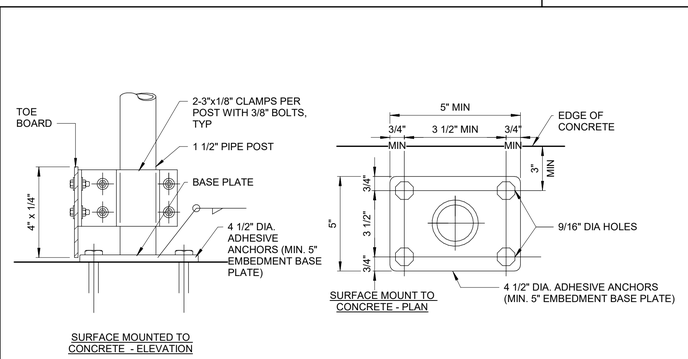

MOUNTING TO CONCRETE

DETAIL	6
3" = 1'-0"	

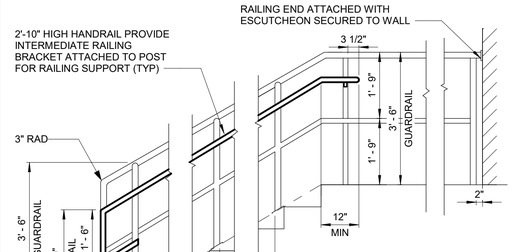

TYPE I STAIR RAILING AT LANDING

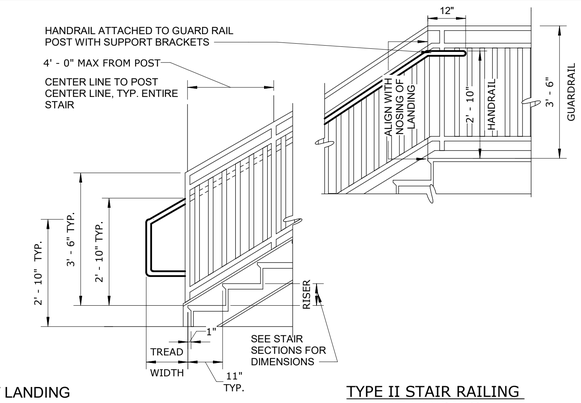

STAIR RAILING AT LANDING

DETAIL	7
1/2" = 1'-0"	

TYPE II STAIR RAILING AT LANDING

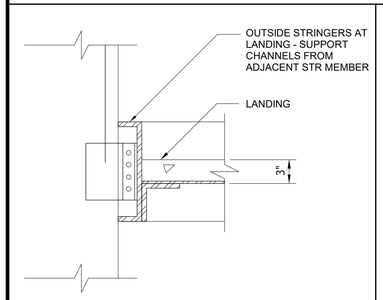

METAL PAN STAIR - LANDING ANCHORAGE

DETAIL	8
NTS	

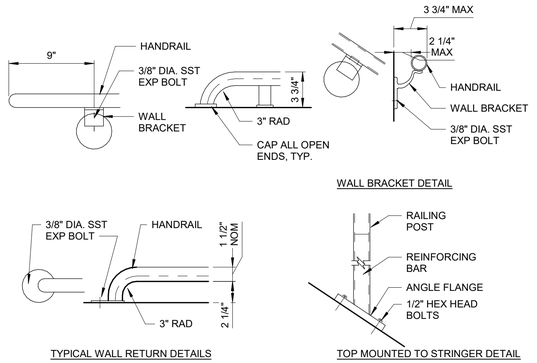

WALL BRACKET

DETAIL	9
1 1/2" = 1'-0"	

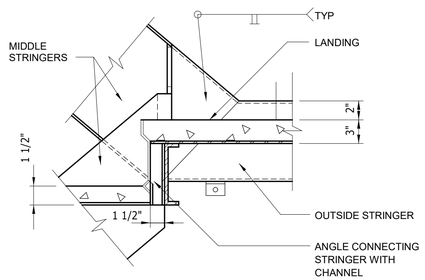

METAL PAN STAIR - INTERMEDIATE LANDING

DETAIL	10
NTS	

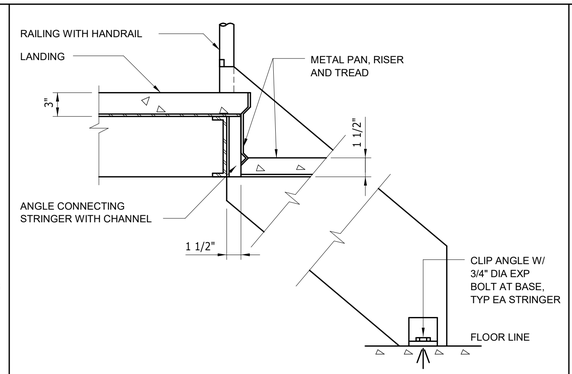

METAL PAN STAIR - TOP LANDING/BOTTOM ANCHORAGE

DETAIL	11
NTS	

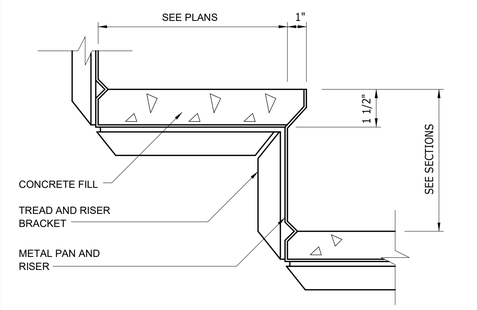

METAL PAN STAIR TREAD AND RISER

DETAIL	12
NTS	

3" = 1'-0" 2" 0 2 4 6"
1/2" = 1'-0" 12" 0 1 3'
1 1/2" = 1'-0" 4" 0 1'

WARNING
IT IS A VIOLATION OF SECTION 7209.2 OF THE NEW YORK STATE EDUCATION LAW FOR ANY PERSON, UNLESS ACTING UNDER THE DIRECTION OF A LICENSED PROFESSIONAL ENGINEER, TO ALTER IN ANY WAY PLANS, SPECIFICATIONS, PLATS OR REPORTS TO WHICH THE SEAL OF A PROFESSIONAL ENGINEER HAS BEEN APPLIED. IF AN ITEM BEARING THE SEAL OF A PROFESSIONAL ENGINEER IS ALTERED, THE ALTERING ENGINEER SHALL AFFIX TO THE ITEM HIS SEAL AND THE NOTATION "ALTERED BY" FOLLOWED BY HIS SIGNATURE, THE DATE, AND A SPECIFIC DESCRIPTION OF THE ALTERATION.

REV	ISSUED FOR	DATE	BY

PROJECT ENGINEER:	R. FROST
DESIGNED BY:	J. WOJCIESKI
DRAWN BY:	J.MARTINEZ
CHECKED BY:	M. STALLONE

IF THIS BAR DOES NOT MEASURE 1" THEN DRAWING IS NOT TO FULL SCALE 0 1/2" 1"

BID SET

REGISTERED ARCHITECT JENNIFER WOJCIESKI 034146 STATE OF NEW YORK

Hazen

HAZEN AND SAWYER
498 SEVENTH AVENUE, 11th FLOOR
NEW YORK, NEW YORK 10018

WESTCHESTER JOINT WATER WORKS
MAMARONECK, NY

RYE LAKE WATER FILTRATION PLANT
HARRISON, NY

FILTRATION PLANT
ARCHITECTURAL
STAIR AND RAILING DETAILS

DATE:	FEB 2025
HAZEN NO.:	90388-000
CONTRACT NO.:	A1364-A
DRAWING NUMBER:	A-401

Autodesk Docs://90388-000_Rye_Lake_Filtration/90388-000-WFP-A.rvt
2/19/2025 4:38:58 PM

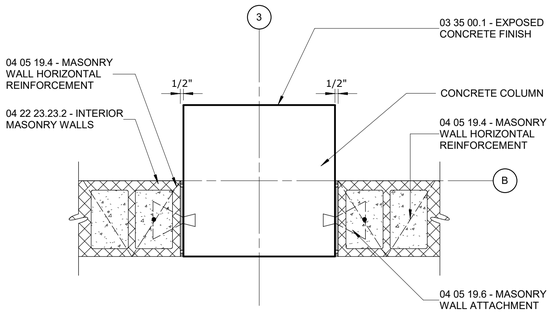

DETAIL 1 — 1" = 1'-0" — A-102

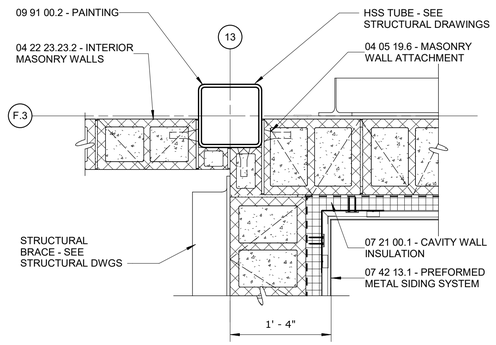

DETAIL 2 — 1" = 1'-0" — A-303

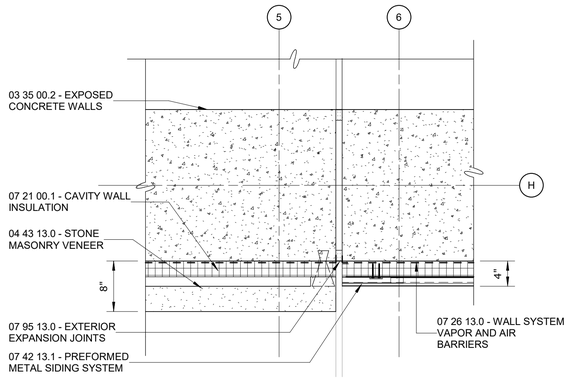

DETAIL 3 — 1" = 1'-0" — A-102

NOTES:

1. REFER TO DRAWINGS A-005 AND A-006 IN ARCHITECTURAL DRAWING SET FOR TEXT ASSOCIATED WITH ALL NOTE TAGS.

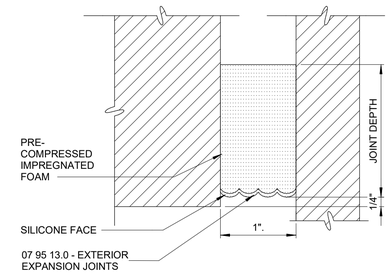

EXPANSION JOINT AT EXTERIOR WALLS

DETAIL 4 — NTS

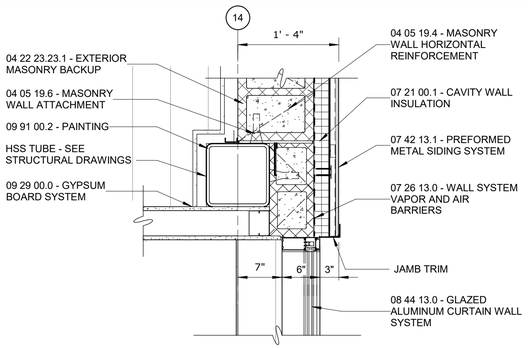

DETAIL 5 — 1" = 1'-0" — A-303

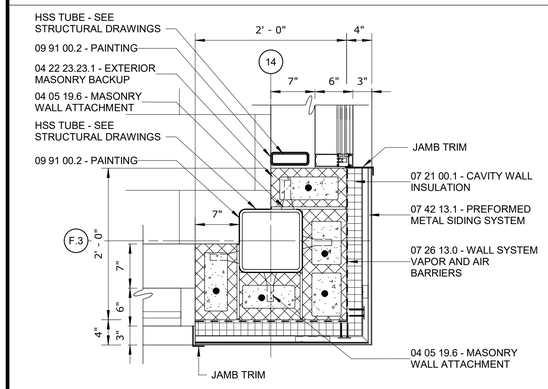

WARNING
IT IS A VIOLATION OF SECTION 7209.2 OF THE NEW YORK STATE EDUCATION LAW FOR ANY PERSON, UNLESS ACTING UNDER THE DIRECTION OF A LICENSED PROFESSIONAL ENGINEER, TO ALTER IN ANY WAY PLANS, SPECIFICATIONS, PLATS OR REPORTS TO WHICH THE SEAL OF A PROFESSIONAL ENGINEER HAS BEEN APPLIED. IF AN ITEM BEARING THE SEAL OF A PROFESSIONAL ENGINEER IS ALTERED, THE ALTERING ENGINEER SHALL AFFIX TO THE ITEM HIS SEAL AND THE NOTATION "ALTERED BY" FOLLOWED BY HIS SIGNATURE, THE DATE, AND A SPECIFIC DESCRIPTION OF THE ALTERATION.

DETAIL 6 — 1" = 1'-0" — A-301

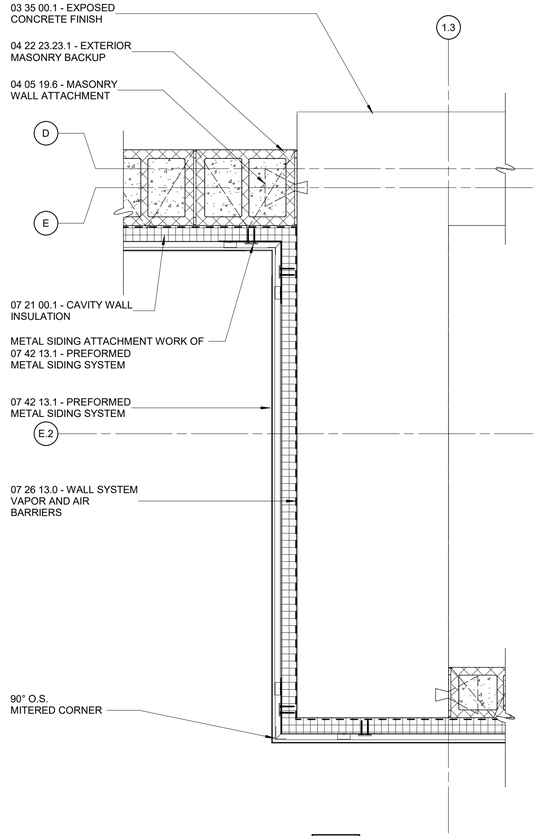

DETAIL 7 — 1" = 1'-0" — A-102

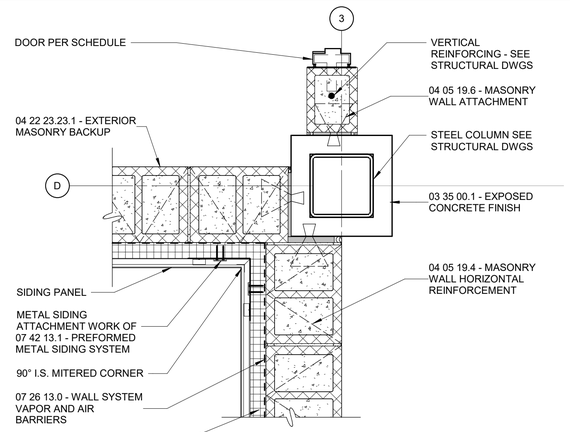

DETAIL 8 — 1" = 1'-0" — A-103

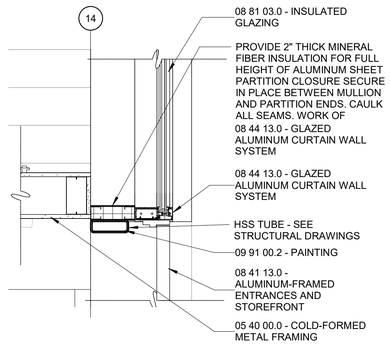

DETAIL 9 — 1" = 1'-0" — A-301

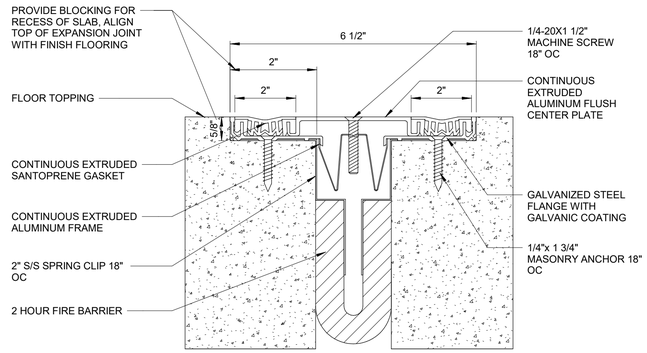

EXPANSION JOINT AT FLOOR

DETAIL 10 — 6" = 1'-0"

1" = 1'-0" 12" 6 0 1'

REV	ISSUED FOR	DATE	BY

PROJECT ENGINEER:	R. FROST
DESIGNED BY:	J. WOJCIESKI
DRAWN BY:	J.MARTINEZ
CHECKED BY:	M. STALLONE
IF THIS BAR DOES NOT MEASURE 1" THEN DRAWING IS NOT TO FULL SCALE	0 1/2" 1"

BID SET

REGISTERED ARCHITECT JENNIFER WOJCIESKI 034146 STATE OF NEW YORK

Hazen

HAZEN AND SAWYER
498 SEVENTH AVENUE, 11th FLOOR
NEW YORK, NEW YORK 10018

WESTCHESTER JOINT WATER WORKS
MAMARONECK, NY

RYE LAKE WATER FILTRATION PLANT
HARRISON, NY

FILTRATION PLANT
ARCHITECTURAL
PLAN DETAILS

DATE:	FEB 2025
HAZEN NO.:	90388-000
CONTRACT NO.:	A1364-A
DRAWING NUMBER:	A-402

Autodesk Docs://90388-000_Rye_Lake_Filtration/90388-000-WFP-A.rvt
2/19/2025 4:39:04 PM

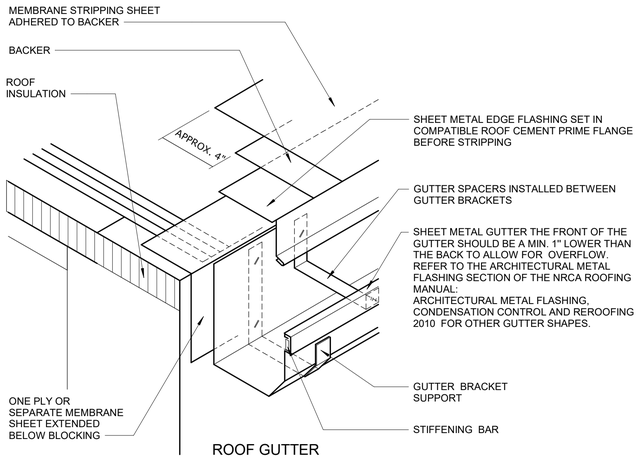

ROOF GUTTER

DETAIL	1
NTS	

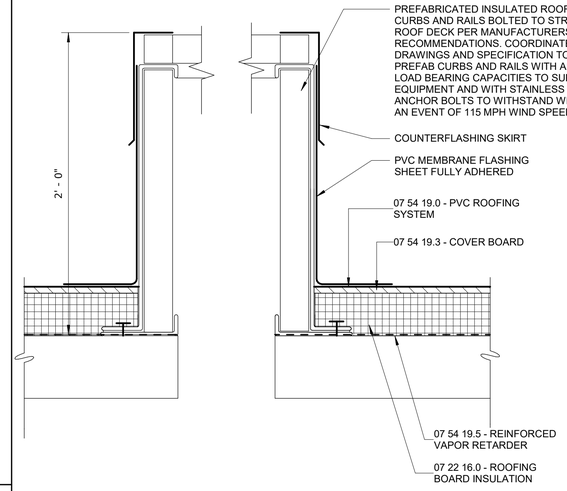

EQUIPMENT CURB OR SUPPORTING RAIL FLASHING

DETAIL	4
NTS	

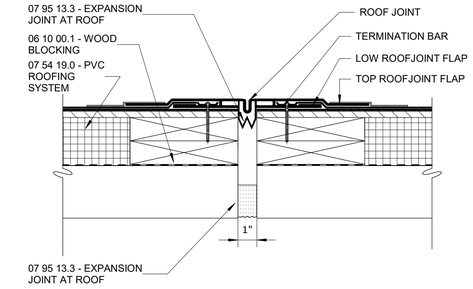

PVC ROOF EXPANSION JOINT

DETAIL	6
3" = 1'-0"	A-104

NOTES:

1. REFER TO DRAWINGS A-005 AND A-006 IN ARCHITECTURAL DRAWING SET FOR TEXT ASSOCIATED WITH ALL NOTE TAGS.

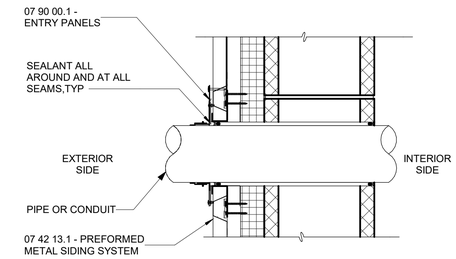

NOTES:
1. COORDINATE ALL ENTRY PANEL SIZES AND PORTS WITH PENETRATIONS, SINGLE OR MULTIPLE.

PENETRATION

DETAIL	9
1 1/2" = 1'-0"	

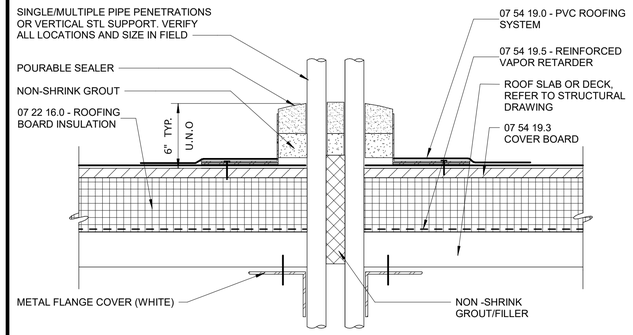

POURABLE SEALER POCKET

DETAIL	2
NTS	

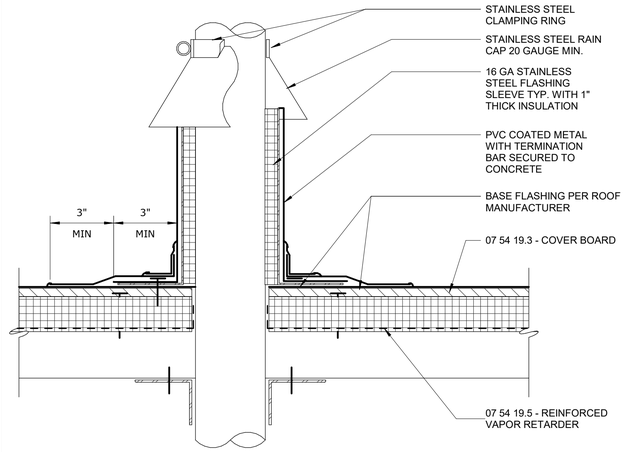

NOTE:
1. FOR PIPES NOT REQUIRING INSULATION, OPTIONAL PRE-MOLDED PVC BOOT IS ACCEPTABLE

COLD OR HOT STACK FLASHING

DETAIL	5
NTS	

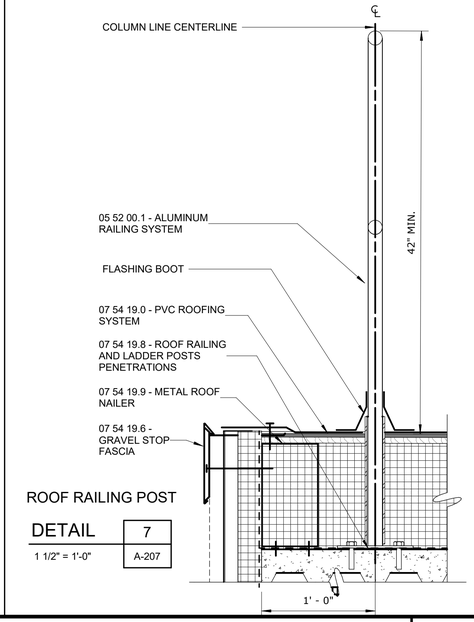

ROOF RAILING POST

DETAIL	7
1 1/2" = 1'-0"	A-207

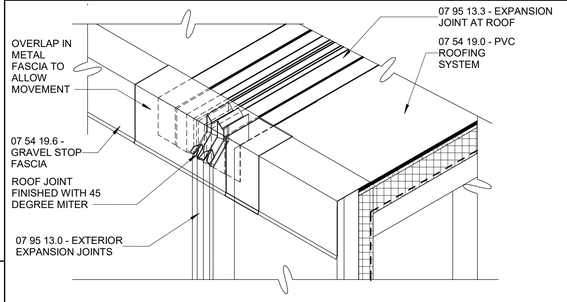

EXPANSION JOINT TRANSITION

DETAIL	12
NTS	

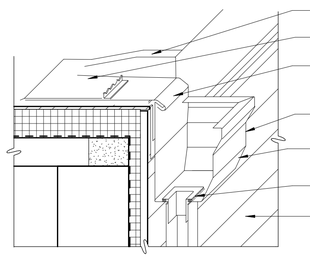

OVERFLOW SCUPPER

DETAIL	8
NTS	

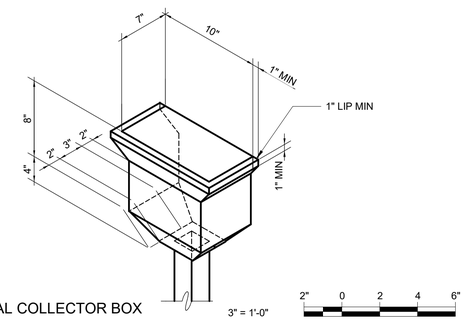

TYPICAL COLLECTOR BOX

DETAIL	10
NTS	

3" = 1'-0" 2" 0 2 4 6"

1/2" = 1'-0" 12" 0 1 3'

ROOF DRAIN

DETAIL	3
NTS	

WARNING
IT IS A VIOLATION OF SECTION 7209.2 OF THE NEW YORK STATE EDUCATION LAW FOR ANY PERSON, UNLESS ACTING UNDER THE DIRECTION OF A LICENSED PROFESSIONAL ENGINEER, TO ALTER IN ANY WAY PLANS, SPECIFICATIONS, PLATS OR REPORTS TO WHICH THE SEAL OF A PROFESSIONAL ENGINEER HAS BEEN AFFIXED. IF AN ITEM BEARING THE SEAL OF A PROFESSIONAL ENGINEER IS ALTERED, THE ALTERING ENGINEER SHALL AFFIX TO THE ITEM HIS SEAL AND THE NOTATION "ALTERED BY" FOLLOWED BY HIS SIGNATURE, THE DATE, AND A SPECIFIC DESCRIPTION OF THE ALTERATION.

REV	ISSUED FOR	DATE	BY

PROJECT ENGINEER:	R. FROST
DESIGNED BY:	J. WOJCIESKI
DRAWN BY:	J.MARTINEZ
CHECKED BY:	M. STALLONE
IF THIS BAR DOES NOT MEASURE 1" THEN DRAWING IS NOT TO FULL SCALE	0 1/2" 1"

BID SET

REGISTERED ARCHITECT JENNIFER WOJCIESKI 034146 STATE OF NEW YORK

Hazen

HAZEN AND SAWYER
498 SEVENTH AVENUE, 11th FLOOR
NEW YORK, NEW YORK 10018

WESTCHESTER JOINT WATER WORKS
MAMARONECK, NY

RYE LAKE WATER FILTRATION PLANT
HARRISON, NY

FILTRATION PLANT
ARCHITECTURAL
ROOF DETAILS - SHEET 1 OF 2

DATE:	FEB 2025
HAZEN NO.:	90388-000
CONTRACT NO.:	A1364-A
DRAWING NUMBER:	A-403

Autodesk Docs://90388-000_Rye_Lake_Filtration/90388-000-WFP-A.rvt
2/19/2025 4:39:06 PM

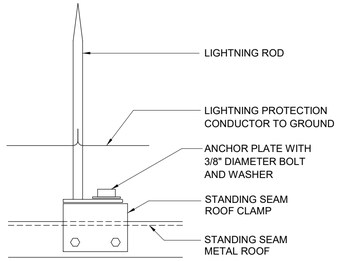

METAL ROOF LIGHTNING PROTECTION

DETAIL	1
NTS	

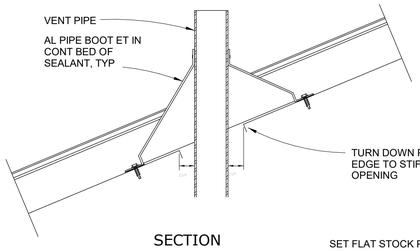

SECTION

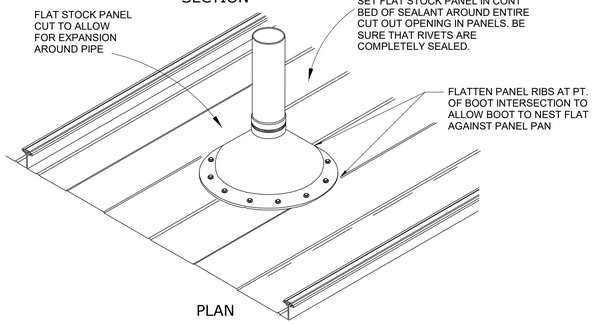

PLAN

METAL ROOF PIPE VENT

DETAIL	2
NTS	

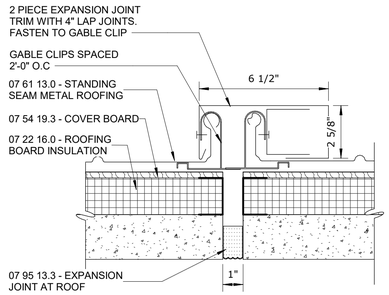

METAL ROOF EXPANSION JOINT

DETAIL	7
NTS	A-209

NOTES:

1. REFER TO DRAWINGS A-005 AND A-006 IN ARCHITECTURAL DRAWING SET FOR TEXT ASSOCIATED WITH ALL NOTE TAGS.

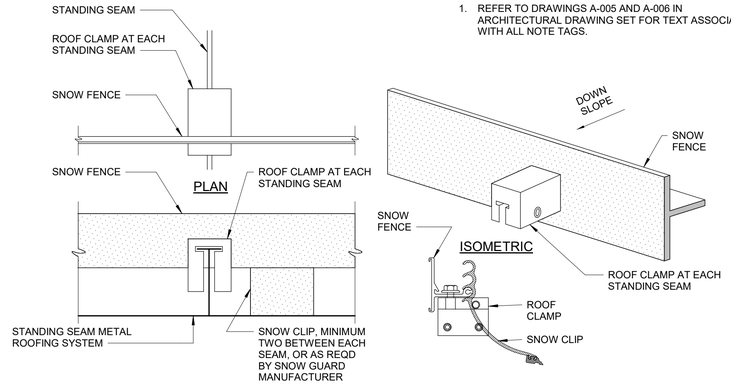

NOTE:
PROVIDE ADDITIONAL SNOW GUARD ROWS AS REQ'D TO SUPPORT THE SNOW LOAD REQUIREMENTS AND PER THE SNOW GUARD MANUFACTURERS RECOMMENDATIONS.

METAL ROOF SNOW GUARD

DETAIL	8
NTS	

NOTE:
NO FASTENER PENETRATIONS THROUGH PANEL AT RIDGE

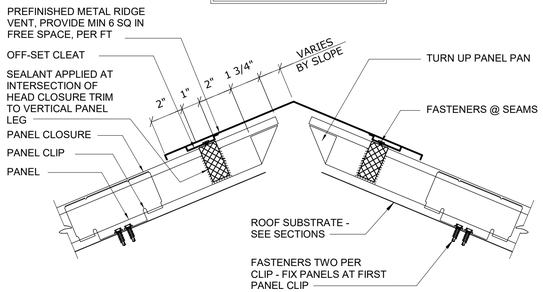

RIDGE VENT

DETAIL	3
NTS	

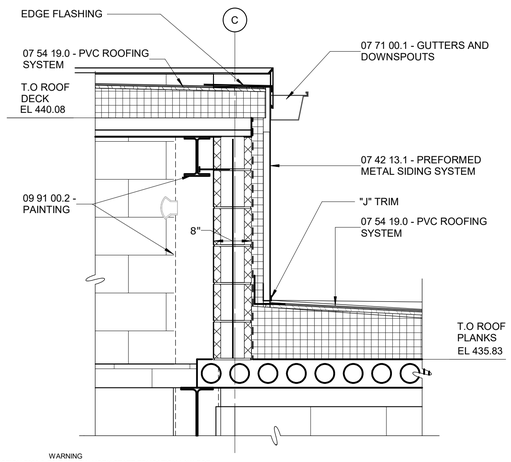

DETAIL	4
3/4" = 1'-0"	A-203

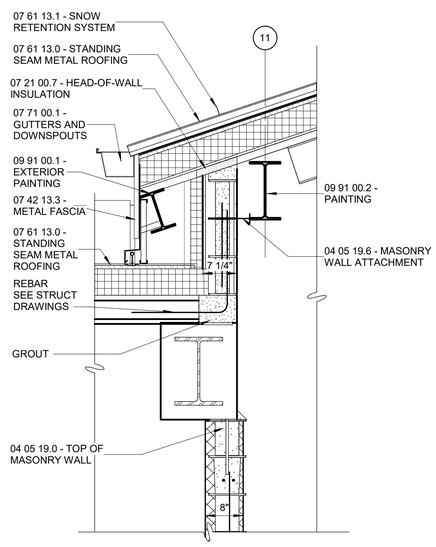

DETAIL	5
3/4" = 1'-0"	A-206

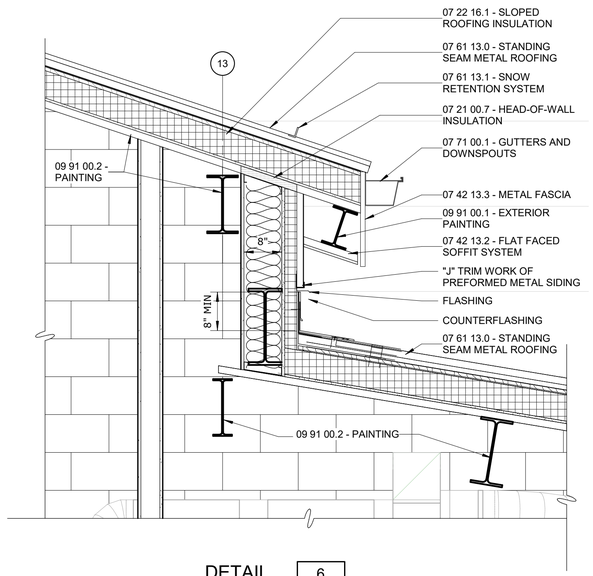

DETAIL	6
3/4" = 1'-0"	A-205

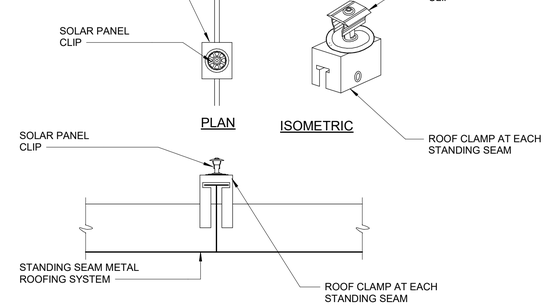

METAL ROOF SOLAR PANEL CLIP

DETAIL	9
NTS	

WARNING
IT IS A VIOLATION OF SECTION 7209.2 OF THE NEW YORK STATE EDUCATION LAW FOR ANY PERSON, UNLESS ACTING UNDER THE DIRECTION OF A LICENSED PROFESSIONAL ENGINEER, TO ALTER IN ANY WAY PLANS, SPECIFICATIONS, PLATS OR REPORTS TO WHICH THE SEAL OF A PROFESSIONAL ENGINEER HAS BEEN APPLIED. IF AN ITEM BEARING THE SEAL OF A PROFESSIONAL ENGINEER IS ALTERED, THE ALTERING ENGINEER SHALL AFFIX TO THE ITEM HIS SEAL AND THE NOTATION "ALTERED BY" FOLLOWED BY HIS SIGNATURE, THE DATE, AND A SPECIFIC DESCRIPTION OF THE ALTERATION.

REV	ISSUED FOR	DATE	BY

PROJECT ENGINEER:	R. FROST
DESIGNED BY:	J. WOJCIESKI
DRAWN BY:	J.MARTINEZ
CHECKED BY:	M. STALLONE
IF THIS BAR DOES NOT MEASURE 1" THEN DRAWING IS NOT TO FULL SCALE	0 1/2" 1"

BID SET

REGISTERED ARCHITECT JENNIFER WOJCIESKI 034146 STATE OF NEW YORK

Hazen
HAZEN AND SAWYER
498 SEVENTH AVENUE, 11th FLOOR
NEW YORK, NEW YORK 10018

WESTCHESTER JOINT WATER WORKS
MAMARONECK, NY

RYE LAKE WATER FILTRATION PLANT
HARRISON, NY

FILTRATION PLANT
ARCHITECTURAL
ROOF DETAILS - SHEET 2 OF 2

DATE:	FEB 2025
HAZEN NO.:	90388-000
CONTRACT NO.:	A1364-A
DRAWING NUMBER:	A-404

Autodesk Docs://90388-000_Rye_Lake_Filtration/90388-000-WFP-A.rvt
2/19/2025 4:39:08 PM

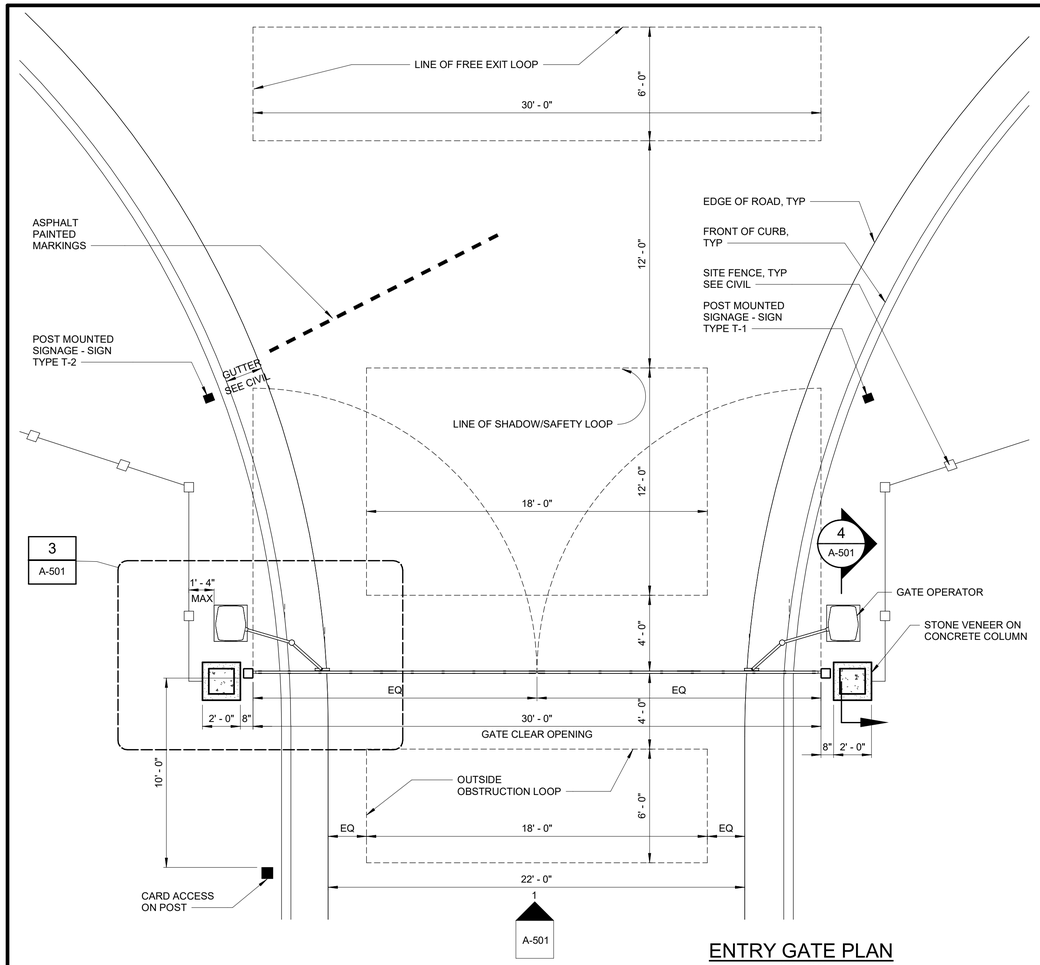

ENTRY GATE PLAN

1/4" = 1'-0"



TYPE T-1: TRAFFIC

SCALE 3" = 1'-0"

SIGNAGE

3" = 1'-0"

TYPE T-2: TRAFFIC

SCALE 3" = 1'-0"

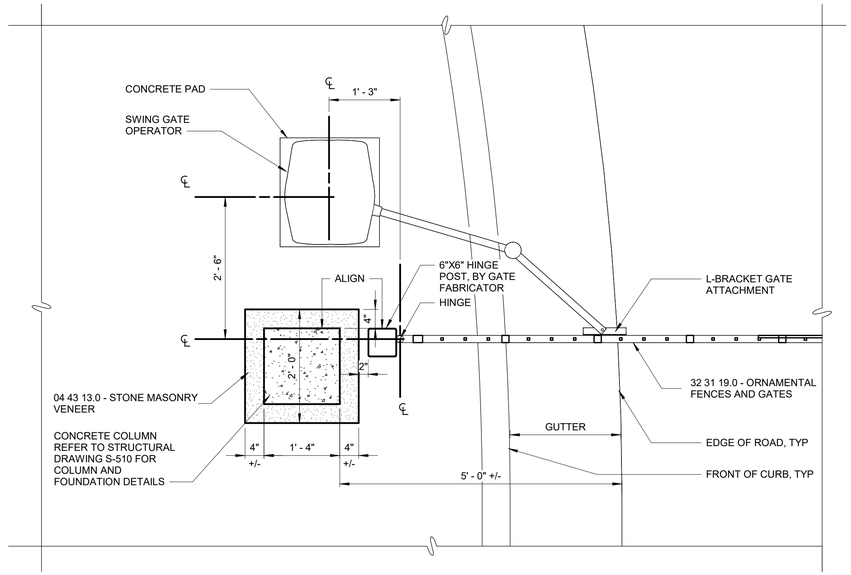

DETAIL 3

3/4" = 1'-0" — A-501

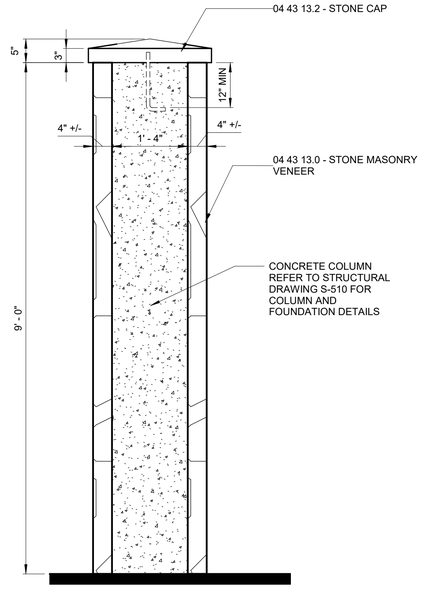

SECTION 4

3/4" = 1'-0" — A-501

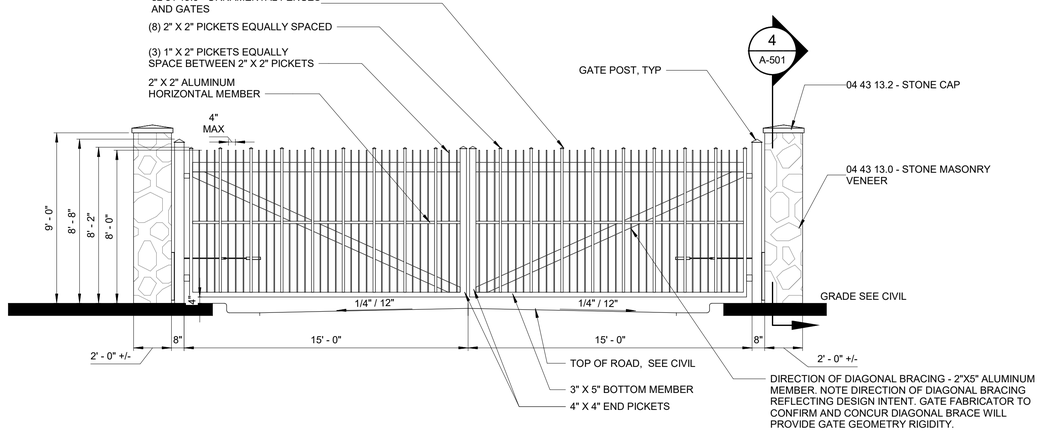

1 - ENTRY GATE - ELEVATION

1/4" = 1'-0"

ARCHITECTURAL KEYNOTES

THE ARCHITECTURAL NOTING SYSTEM PROVIDES IDENTIFICATION OF MATERIALS AND PRODUCTS ON THE DRAWINGS AND CONNECT THE DRAWING TO THE SPECIFICATIONS.

04 43 13.0 - STONE MASONRY VENEER	PROVIDE CONNECTICUT BLEND FULL BED STONE VENEER SECURED TO EXTERIOR MASONRY BACKUP WORK OF 04 22 23.23.1 IN AREAS INDICATED ON THE ARCHITECTURAL DRAWINGS AND IN ACCORDANCE WITH SECTIONS 04 43 13 – STONE MASONRY AND 04 05 19 – MASONRY ANCHORAGE AND REINFORCING.
04 43 13.2 - STONE CAP	PROVIDE BLUESTONE CAP WITH DRIP EDGE AT TOP OF CONCRETE PIER WITH STONE VENEER AT ENTRY GATE. SECURE BLUESTONE CAP TO CONCRETE PIER IN IN ACCORDANCE WITH SECTIONS 04 43 13 – STONE MASONRY AND 04 05 19 – MASONRY ANCHORAGE AND REINFORCING.
32 31 19.0 - ORNAMENTAL FENCES AND GATES	PROVIDE ORNAMENTAL METAL FENCES AND VEHICULAR SWING GATES IN ACCORDANCE WITH SECTION 32 31 19. REFER TO CIVIL DRAWINGS FOR FENCE AND GATE LOCATIONS. ALL REQUIRED SUPPORTS AND ANY NECESSARY ACCESSORY COMPONENTS TO THE GATES, WHETHER INDICATED IN CONTRACT DOCUMENTS OR NOT, SHALL BE PROVIDED TO ALLOW GATES TO BE FULLY OPERABLE AND FUNCTIONAL WITHOUT HINDERANCE OF ANY KIND.

WARNING
IT IS A VIOLATION OF SECTION 7209.2 OF THE NEW YORK STATE EDUCATION LAW FOR ANY PERSON, UNLESS ACTING UNDER THE DIRECTION OF A LICENSED PROFESSIONAL ENGINEER, TO ALTER IN ANY WAY PLANS, SPECIFICATIONS, PLATS OR REPORTS TO WHICH THE SEAL OF A PROFESSIONAL ENGINEER HAS BEEN APPLIED. IF AN ITEM BEARING THE SEAL OF A PROFESSIONAL ENGINEER IS ALTERED, THE ALTERING ENGINEER SHALL AFFIX TO THE ITEM HIS SEAL AND THE NOTATION "ALTERED BY" FOLLOWED BY HIS SIGNATURE, THE DATE, AND A SPECIFIC DESCRIPTION OF THE ALTERATION.

REV	ISSUED FOR	DATE	BY

PROJECT ENGINEER:	R. FROST
DESIGNED BY:	J. WOJCIESKI
DRAWN BY:	J. MARTINEZ
CHECKED BY:	M. STALLONE
IF THIS BAR DOES NOT MEASURE 1" THEN DRAWING IS NOT TO FULL SCALE	0 1/2" 1"

BID SET

REGISTERED ARCHITECT JENNIFER WOJCIESKI 034146 STATE OF NEW YORK

Hazen
HAZEN AND SAWYER
498 SEVENTH AVENUE, 11th FLOOR
NEW YORK, NEW YORK 10018

WESTCHESTER JOINT WATER WORKS
MAMARONECK, NY

RYE LAKE WATER FILTRATION PLANT
HARRISON, NY

FILTRATION PLANT
ARCHITECTURAL
SITE ENTRANCE PLAN AND DETAILS

DATE:	FEB 2025
HAZEN NO.:	90388-000
CONTRACT NO.:	A1364-A
DRAWING NUMBER:	A-501

Autodesk Docs://90388-000_Rye_Lake_Filtration/90388-000-EG-A.rvt
2/19/2025 9:40:47 AM

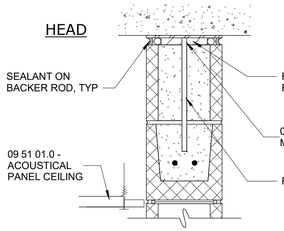

1A / 0 — 8" GFB

1A / 1 — 8" GFB
1-HOUR FIRE RATED
UL U905

1A / 2 — 8" GFB
2-HOUR FIRE RATED
UL U905

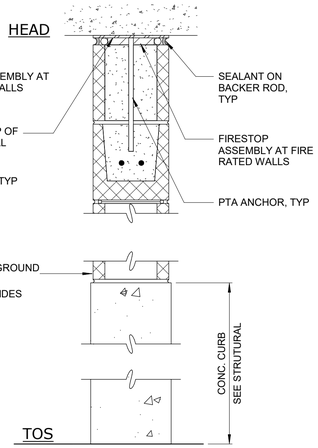

1B / 0 — 8" GFB ON CONC CURB

1B / 1 — 8" GFB
1-HOUR FIRE RATED
UL U905

1B / 2 — 8" GFB
2-HOUR FIRE RATED
UL U905

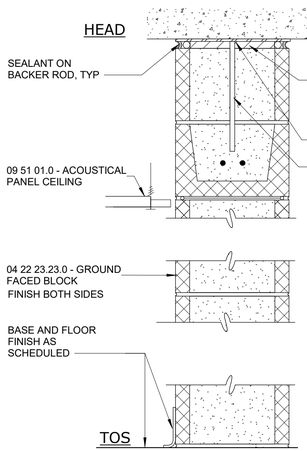

2A / 0 — INTERIOR 12" GFB

2A / 1 — INTERIOR 12" GFB
1-HOUR FIRE RATED
UL U905

2A / 2 — INTERIOR 12" GFB
2-HOUR FIRE RATED
UL U905

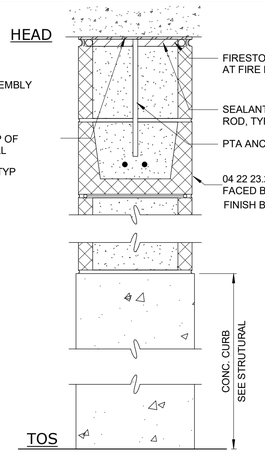

2B / 0 — INTERIOR 12" GFB ON CONC CURB

2B / 1 — INTERIOR 12" GFB ON CONC CURB
1-HOUR FIRE RATED
UL U905

2B / 2 — INTERIOR 12" GFB ON CONC CURB
2-HOUR FIRE RATED
UL U905

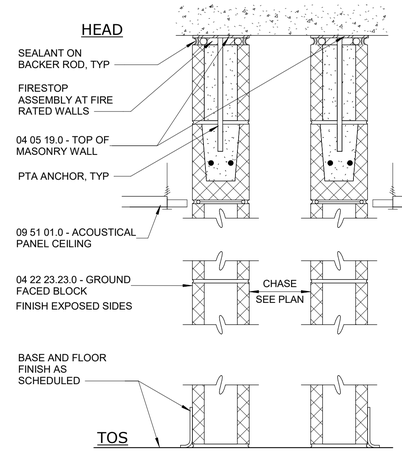

3A / 0 — 6" MASONRY CHASE WALL

3A / 1 — 6" MASONRY CHASE WALL
1-HOUR FIRE RATED
UL U906

3A / 2 — 6" MASONRY CHASE WALL
2-HOUR FIRE RATED
UL U906

NOTES:

1. REFER TO DRAWINGS A-005 AND A-006 IN ARCHITECTURAL DRAWING SET FOR TEXT ASSOCIATED WITH ALL NOTE TAGS.

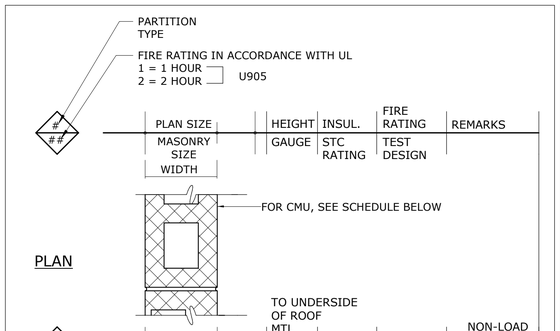

MASONRY WALL LEGEND

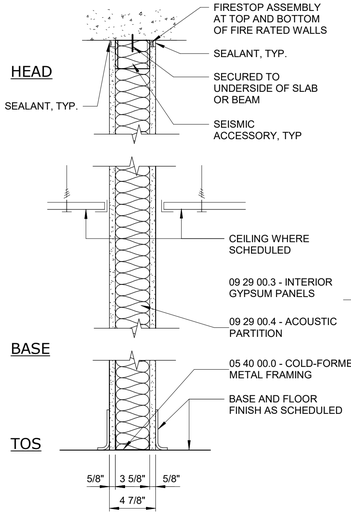

4A / 0 — 3 5/8" PARTITION - ACOUSTIC

4A / 1 — 3 5/8" PARTITION - ACOUSTIC
1-HOUR FIRE RATED
UL U419, STC 52

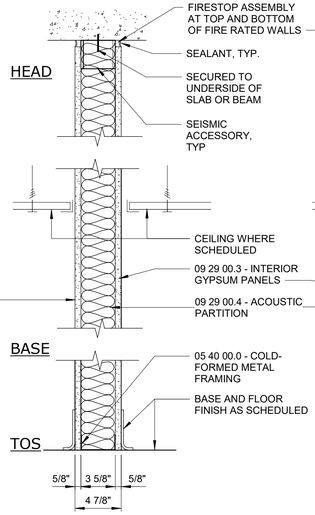

4B / 0 — 3 5/8" PARTITION

4B / 1 — 3 5/8" PARTITION
1-HOUR FIRE RATED
UL U419, STC 52

4B / 2 — 3 5/8" PARTITION
2-HOUR FIRE RATED
UL U419, STC 52

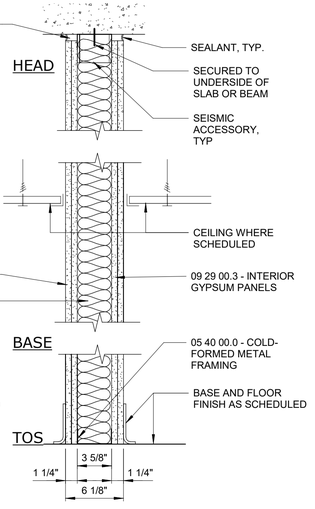

4C / 0 — 3 5/8" PARTITION

4C / 1 — 3 5/8" PARTITION
1-HOUR FIRE RATED
UL U419, STC 52

4C / 2 — 3 5/8" PARTITION
2-HOUR FIRE RATED
UL U419, STC 52

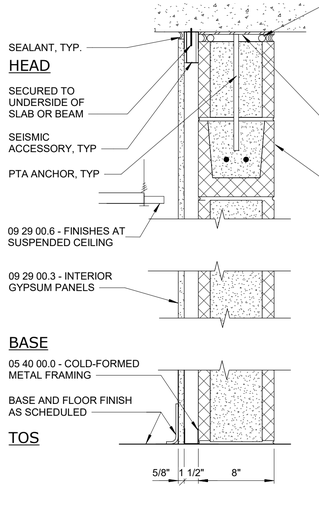

4D / 0 — MASONRY FURRING

4D / 1 — MASONRY FURRING
1-HOUR FIRE RATED
UL U905

4D / 2 — MASONRY FURRING
2-HOUR FIRE RATED
UL U905

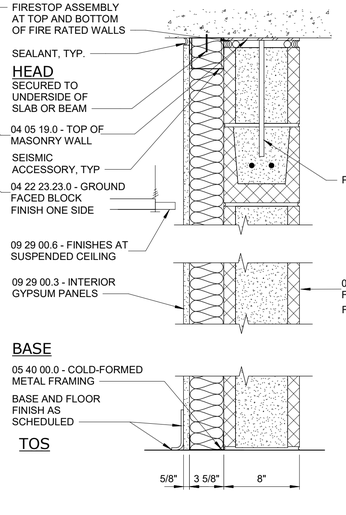

4E / 0 — ACOUSTIC MASONRY FURRING

4E / 1 — ACOUSTIC MASONRY FURRING
1-HOUR FIRE RATED
UL U905

4E / 2 — ACOUSTIC MASONRY FURRING
2-HOUR FIRE RATED
UL U905

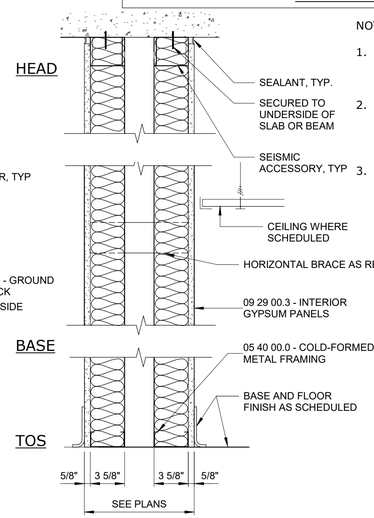

4F / 0 — 3 5/8" PARTITION PLUMBING CHASE

4F / 1 — 3 5/8" PARTITION PLUMBING CHASE
1-HOUR FIRE RATED
UL U493, STC 58

4F / 2 — 3 5/8" PARTITION PLUMBING CHASE
2-HOUR FIRE RATED
UL U493, STC 58

NOTES:

1. REFER TO STRUCTURAL DRAWING S-006 FOR ADDITIONAL INFORMATION IN REGARD TO ALL MASONRY WALL SYSTEMS.
2. REFER TO ARCHITECTURAL NOTE 04 22 23.23.8 - UNIT MASONRY PARTITIONS REGARDING PARTITIONS THAT ARE NOT INDICATED ON THE PLANS.
3. REFER TO ARCHITECTURAL NOTE 09 29 00.2 - PARTITION TYPES REGARDING GYPSUM SYSTEM PARTITIONS THAT ARE NOT INDICATED ON THE PLANS.

1 1/2" = 1'-0"

WARNING
IT IS A VIOLATION OF SECTION 7209.2 OF THE NEW YORK STATE EDUCATION LAW FOR ANY PERSON, UNLESS ACTING UNDER THE DIRECTION OF A LICENSED PROFESSIONAL ENGINEER, TO ALTER IN ANY WAY PLANS, SPECIFICATIONS, PLATS OR REPORTS TO WHICH THE SEAL OF A PROFESSIONAL ENGINEER HAS BEEN APPLIED. IF AN ITEM BEARING THE SEAL OF A PROFESSIONAL ENGINEER IS ALTERED, THE ALTERING ENGINEER SHALL AFFIX TO THE ITEM HIS SEAL AND THE NOTATION "ALTERED BY" FOLLOWED BY HIS SIGNATURE, THE DATE, AND A SPECIFIC DESCRIPTION OF THE ALTERATION.

REV	ISSUED FOR	DATE	BY

PROJECT ENGINEER:	R. FROST
DESIGNED BY:	J. WOJCIESKI
DRAWN BY:	J.MARTINEZ
CHECKED BY:	M. STALLONE

IF THIS BAR DOES NOT MEASURE 1" THEN DRAWING IS NOT TO FULL SCALE — 0 1/2" 1"

BID SET

REGISTERED ARCHITECT JENNIFER WOJCIESKI 034146 STATE OF NEW YORK

Hazen
HAZEN AND SAWYER
498 SEVENTH AVENUE, 11th FLOOR
NEW YORK, NEW YORK 10018

WESTCHESTER JOINT WATER WORKS
MAMARONECK, NY

RYE LAKE WATER FILTRATION PLANT
HARRISON, NY

FILTRATION PLANT ARCHITECTURAL PARTITION TYPES AND DETAILS

DATE:	FEB 2025
HAZEN NO.:	90388-000
CONTRACT NO.:	A1364-A
DRAWING NUMBER:	A-601

Autodesk Docs://90388-000_Rye_Lake_Filtration/90388-000-WFP-A.rvt
2/19/2025 4:39:09 PM

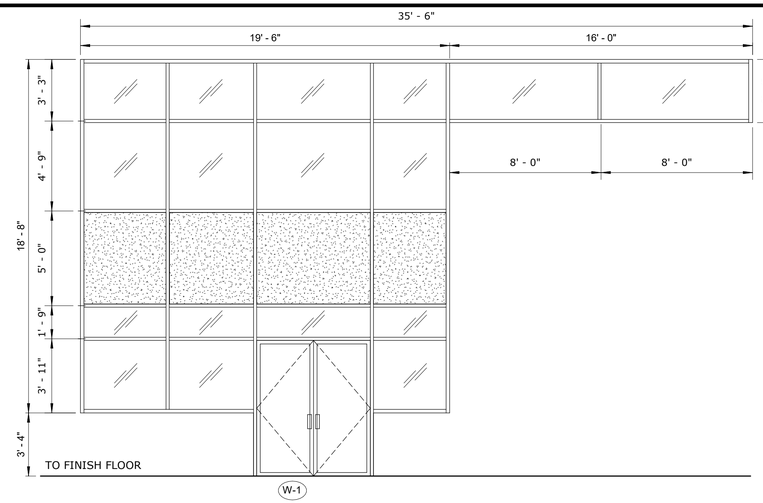

W-1

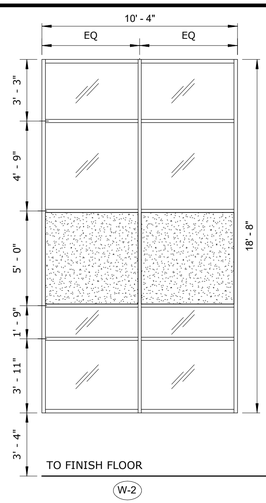

W-2

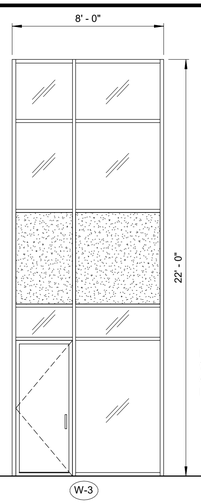

W-3

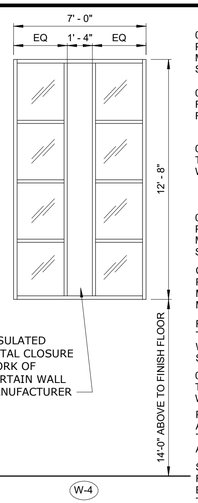

W-4

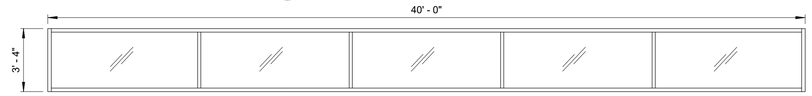

W-5

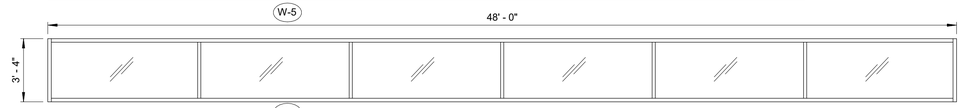

W-6

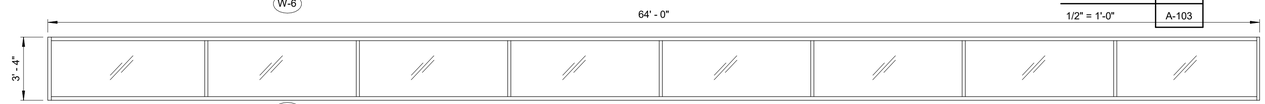

W-7

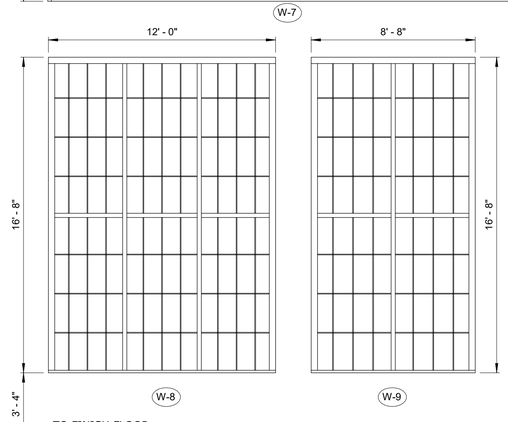

W-8

W-9

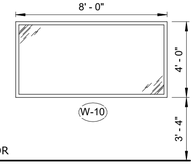

W-10

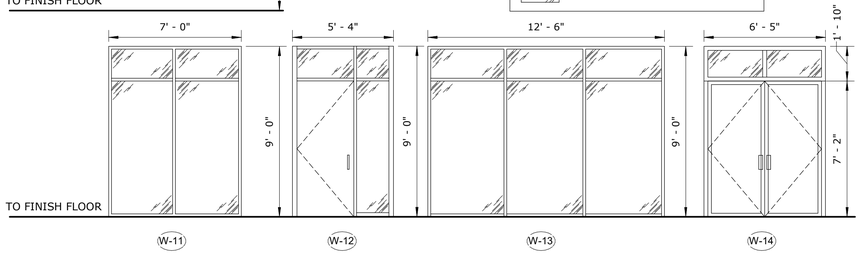

W-11 W-12 W-13 W-14

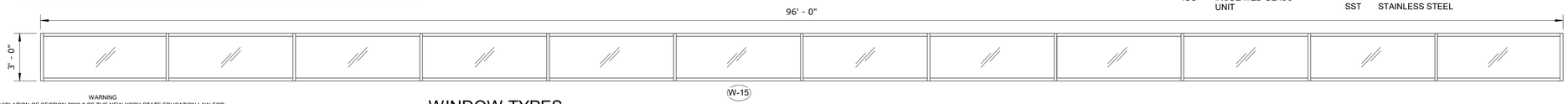

W-15

WINDOW TYPES

1/4" = 1'-0"

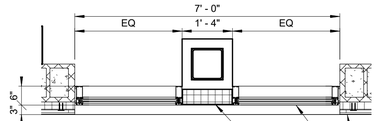

W4 - PLAN VIEW

DETAIL 4 — 1/2" = 1'-0" — A-103

LEGEND

- 08 81 03.0 INSULATED GLAZING
- 08 81 03.1 INSULATED SPANDREL
- TEMPERED GLASS

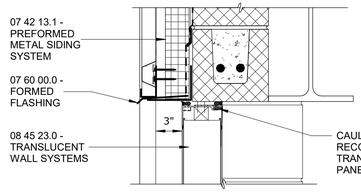

HEAD

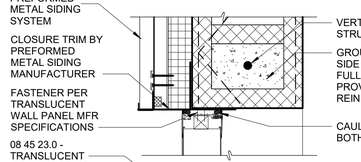

JAMB

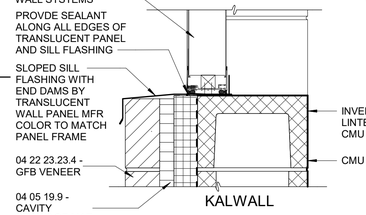

SILL

DETAIL 1 — 1 1/2" = 1'-0"

NOTES:

1. REFER TO DRAWINGS A-005 AND A-006 IN ARCHITECTURAL DRAWING SET FOR TEXT ASSOCIATED WITH ALL NOTE TAGS.

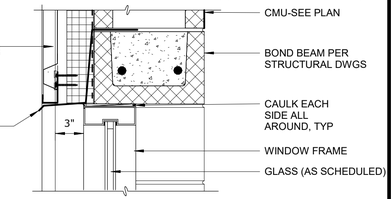

HEAD

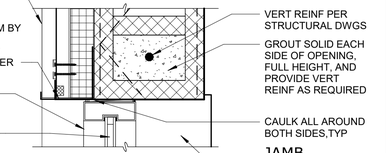

JAMB

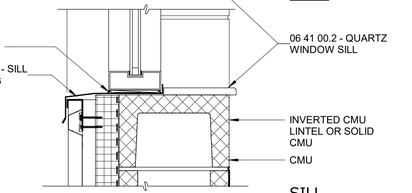

WINDOW

SILL

DETAIL 2 — 1 1/2" = 1'-0"

HEAD

JAMB

SILL

CURTAINWALL

DETAIL 3 — 1 1/2" = 1'-0"

1/4" = 1'-0" — 1 0 1 2 3 7'

1 1/2" = 1'-0" — 4" 0 1'

WINDOW SCHEDULE

TYPE	FRAME MATERIAL	WIDTH	HEIGHT	DETAILS		
				HEAD	JAMB	SILL
W1	AL	36' - 0"	18' - 8"	3	3	3
W2	AL	10' - 4"	18' - 8"	3	3	3
W3	AL	8' - 0	22' - 0"	3	3	3
W4	AL	7' - 0"	12' - 8"	3	3	3
W5	AL	40' - 0"	3' - 4"	2	2	2
W6	AL	48' - 0"	3' - 4"	2	2	2
W7	AL	64' - 0"	3' - 4"	2	2	2
W8	AL	12' - 0"	16' - 8"	1	1	1
W9	AL	8' - 8"	16' - 8"	1	1	1
W10	AL	8' - 0"	4' - 0"	2	2	2
W11	AL	7' - 0"	9' - 0"	2	2	2
W12	AL	5' - 4	9' - 0"	2	2	2
W13	AL	12' - 6"	9' - 0"	2	2	2
W14	AL	6' - 5"	1' - 10"	2	2	2
W15	AL	96' - 0"	3' - 0"	2	2	2

WINDOW LEGEND

AL	ALUMINUM	LSG	LAMINATED SAFETY GLASS	TG	TEMPERED GLASS
EX	EXISTING	MFR	MANUFACTURER	TWS	TRANSLUCENT WALL SYSTEM
FRP	FIBERGLASS REINFORCED PLASTIC	PCG	POLYCARBONATE GLASS		
ISU	INSULATED SPANDREL UNIT	PT	PAINT		
IGU	INSULATED GLASS UNIT	SST	STAINLESS STEEL		

WARNING
IT IS A VIOLATION OF SECTION 7209.2 OF THE NEW YORK STATE EDUCATION LAW FOR ANY PERSON, UNLESS ACTING UNDER THE DIRECTION OF A LICENSED PROFESSIONAL ENGINEER, TO ALTER IN ANY WAY PLANS, SPECIFICATIONS, PLATS OR REPORTS TO WHICH THE SEAL OF A PROFESSIONAL ENGINEER HAS BEEN APPLIED. IF AN ITEM BEARING THE SEAL OF A PROFESSIONAL ENGINEER IS ALTERED, THE ALTERING ENGINEER SHALL AFFIX TO THE ITEM HIS SEAL AND THE NOTATION "ALTERED BY" FOLLOWED BY HIS SIGNATURE, THE DATE, AND A SPECIFIC DESCRIPTION OF THE ALTERATION.

REV	ISSUED FOR	DATE	BY

PROJECT ENGINEER:	R. FROST
DESIGNED BY:	J. WOJCIESKI
DRAWN BY:	J.MARTINEZ
CHECKED BY:	M. STALLONE

IF THIS BAR DOES NOT MEASURE 1" THEN DRAWING IS NOT TO FULL SCALE — 0 1/2" 1"

BID SET

REGISTERED ARCHITECT JENNIFER WOJCIESKI 034146 STATE OF NEW YORK

Hazen

HAZEN AND SAWYER
498 SEVENTH AVENUE, 11th FLOOR
NEW YORK, NEW YORK 10018

WESTCHESTER JOINT WATER WORKS
MAMARONECK, NY

RYE LAKE WATER FILTRATION PLANT
HARRISON, NY

FILTRATION PLANT
ARCHITECTURAL
WINDOW SCHEDULE AND DETAILS

DATE:	FEB 2025
HAZEN NO.:	90388-000
CONTRACT NO.:	A1364-A
DRAWING NUMBER:	A-602

Autodesk Docs://90388-000_Rye_Lake_Filtration/90388-000-WFP-A.rvt
2/19/2025 4:38:11 PM

DOOR SCHEDULE

NO.	FRAME		DOOR					DETAILS			GLAZING	FIRE LABEL	HDWR NO	THRSHLD	REMARKS
	TYPE	MATL	TYPE	MATL	WIDTH	HEIGHT	THICKNESS	HEAD	JAMB	SILL					
006-1	F1	FRP	F	FRP	3' - 0"	7' - 2"	1 3/4"	6	6	6			11		
008-1	F1	FRP	F	FRP	6' - 0"	7' - 2"	1 3/4"	5	5	5			10	TYPE 1	
101-1	F1	FRP	F	FRP	3' - 0"	7' - 2"	1 3/4"	5	5	5		1 1/2 HR	13	TYPE 1	
102-1	F1	FRP	F	FRP	3' - 0"	7' - 2"	1 3/4"	5	5	5		1 1/2 HR	13	TYPE 1	
103-1	F1	FRP	F	FRP	3' - 0"	7' - 2"	1 3/4"	5	5	5		1 1/2 HR	13	TYPE 1	
105-1	F1	FRP	F	FRP	6' - 0"	7' - 2"	1 3/4"	5	5	5		1 1/2 HR	4	TYPE 1	
106-1	F1	FRP	F	FRP	6' - 0"	7' - 2"	1 3/4"	5	5	5			12	-	
106-2	MFR	MFR	OH	AL	12' - 0"	14' - 8"	2"	7	7	7			-	-	
107-1	F1	FRP	F	FRP	3' - 0"	7' - 2"	1 3/4"	5	5	5		1 1/2 HR	13	TYPE 1	
108-1	F1	FRP	F	FRP	3' - 0"	7' - 2"	1 3/4"	5	5	5			11	-	
109-1	F1	FRP	F	FRP	3' - 0"	7' - 2"	1 3/4"	5	5	5			1	TYPE 2	
109-2	MFR	MFR	OH	AL	12' - 0"	14' - 8"	2"	4	4	4			-	-	
109-3	MFR	MFR	OH	AL	12' - 0"	14' - 8"	2"	7	7	7			-	-	
109-4	F1	FRP	F	FRP	3' - 0"	7' - 2"	1 3/4"	7	7	7			14	-	
110-1	F1	FRP	F	FRP	3' - 0"	7' - 2"	1 3/4"	3	3	3			1	TYPE 2	
110-2	F1	FRP	F	FRP	3' - 0"	7' - 2"	1 3/4"	5	5	5			11	TYPE 1	
111-1	MFR	AL	FG	AL	3' - 0"	7' - 2"	2 1/4"	MFR	MFR	MFR	IGU		6		
112-1	F1	FRP	F	FRP	6' - 0"	7' - 2"	1 3/4"	5	5	5			10	TYPE 1	
113-1	MFR	AL	FG	AL	6' - 0"	7' - 2"	2 1/4"	MFR	MFR	MFR	IGU		2	TYPE 2	
113-2	MFR	AL	FG	AL	6' - 0"	7' - 2"	2 1/4"	MFR	MFR	MFR	IGU		4	-	
114-1	F1	FRP	F	FRP	3' - 0"	7' - 2"	1 3/4"	1	1	1			11	TYPE 1	
115-1	F1	FRP	F	FRP	3' - 0"	7' - 2"	1 3/4"	1	1	1			6	TYPE 1	
116-1	F1	FRP	F	FRP	3' - 0"	7' - 2"	1 3/4"	1	1	1			6	-	
117-1	F1	FRP	F	FRP	3' - 0"	7' - 2"	1 3/4"	1	1	1			6	TYPE 1	
118-1	F1	FRP	F	FRP	3' - 0"	7' - 2"	1 3/4"	1	1	1			6	-	
119-1	F1	FRP	F	FRP	6' - 0"	7' - 2"	1 3/4"	4	4	4		1 1/2 HR	2	TYPE 2	
119-2	F1	FRP	F	FRP	3' - 0"	7' - 2"	1 3/4"	5	5	5		1 1/2 HR	9	-	
120-1	F1	FRP	F	FRP	6' - 0"	7' - 2"	1 3/4"	5	5	5			12	-	
124-1	F1	FRP	F	FRP	3' - 0"	7' - 2"	1 3/4"	4	4	4		3/4 HR	1	TYPE 2	
124-2	F1	FRP	NG	FRP	3' - 0"	7' - 2"	1 3/4"	5	5	5	LSG	3/4 HR	9	TYPE 1	
129-2	MFR	MFR	OH	AL	10' - 0"	10' - 0"	2"	7	7	7			-	-	
201-1	F1	FRP	F	FRP	6' - 0"	7' - 2"	1 3/4"	5	5	5			12	-	
202-1	F1	FRP	F	FRP	6' - 0"	7' - 2"	1 3/4"	5	5	5			12	-	
203-1	F1	FRP	F	FRP	6' - 0"	7' - 2"	1 3/4"	5	5	5		1 1/2 HR	10	-	
203-2	F1	FRP	F	FRP	3' - 0"	7' - 2"	1 3/4"	5	5	5		1 1/2 HR	9	-	
205-1	F1	FRP	F	FRP	3' - 0"	7' - 2"	1 3/4"	5	5	5			5	TYPE 1	
205-2	F1	FRP	F	FRP	3' - 0"	7' - 2"	1 3/4"	5	5	5			11	TYPE 1	
206-1	F1	FRP	F	FRP	3' - 0"	7' - 2"	1 3/4"	5	5	5			5	TYPE 1	
206-2	F1	FRP	F	FRP	3' - 0"	7' - 2"	1 3/4"	5	5	5			5	-	
207-1	F1	FRP	F	FRP	3' - 0"	7' - 2"	1 3/4"	5	5	5			11	-	
208-1	F1	FRP	F	FRP	6' - 0"	7' - 2"	1 3/4"	5	5	5			12	-	
209-1	F1	FRP	F	FRP	3' - 0"	7' - 2"	1 3/4"	1	1	1			8	-	
210-1	F1	FRP	F	FRP	3' - 0"	7' - 2"	1 3/4"	1	1	1			8	-	
211-1	F1	FRP	NG	FRP	3' - 0"	7' - 2"	1 3/4"	5	5	5	LSG		9	TYPE 1	
212-1	F1	FRP	F	FRP	3' - 0"	7' - 2"	1 3/4"	2	2	2			11	TYPE 1	
213-1	F1	FRP	F	FRP	3' - 0"	7' - 2"	1 3/4"	2	2	2			7	TYPE 1	
214-1	F1	FRP	F	FRP	3' - 0"	7' - 2"	1 3/4"	2	2	2			5	-	
215-1	F1	FRP	F	FRP	6' - 0"	7' - 2"	1 3/4"	5	5	5		3/4 HR	4	-	
216-1	F1	FRP	F	FRP	3' - 0"	7' - 2"	1 3/4"	5	5	5			11	-	
C01-1	F1	FRP	NG	FRP	3' - 0"	7' - 2"	1 3/4"	5	5	5	LSG	3/4 HR	9	-	
C01-2	F1	FRP	F	FRP	6' - 0"	7' - 2"	1 3/4"	4	4	4			2	TYPE 2	
C01-3	F1	FRP	NG	FRP	3' - 0"	7' - 2"	1 3/4"	5	5	5	LSG		11	TYPE 1	
C01-4	F1	FRP	NG	FRP	6' - 0"	7' - 2"	1 3/4"	5	5	5	LSG		4	-	
C03-1	F1	FRP	NG	FRP	6' - 0"	7' - 2"	1 3/4"	5	5	5	LSG		4	-	
C04-1	F1	FRP	NG	FRP	6' - 0"	7' - 2"	1 3/4"	5	5	5	LSG		4	-	
C04-2	F1	FRP	NG	FRP	6' - 0"	7' - 2"	1 3/4"	5	5	5	LSG		4	-	
SA-1	F1	FRP	NG	FRP	3' - 0"	7' - 2"	1 3/4"	5	5	5	LSG	3/4 HR	3	TYPE 1	
SA-2	F1	FRP	NG	FRP	3' - 0"	7' - 2"	1 3/4"	5	5	5	LSG	3/4 HR	3	TYPE 1	
SA-3	F1	FRP	NG	FRP	3' - 0"	7' - 2"	1 3/4"	5	5	5	LSG	3/4 HR	3	TYPE 1	
SB-1	MFR	AL	FG	AL	3' - 0"	7' - 2"	2 1/4"	MFR	MFR	MFR	IGU		1	TYPE 2	
SB-2	F1	FRP	NG	FRP	3' - 0"	7' - 2"	1 3/4"	5	5	5	LSG	3/4 HR	3	TYPE 1	
SB-3	F1	FRP	NG	FRP	3' - 0"	7' - 2"	1 3/4"	5	5	5	LSG	3/4 HR	3	TYPE 1	
SB-4	F1	FRP	F	FRP	3' - 0"	7' - 2"	1 3/4"	5	5	5	LSG	3/4 HR	3	TYPE 1	
SC-1	F1	FRP	NG	FRP	3' - 0"	7' - 2"	1 3/4"	6	6	6	LSG	3/4 HR	3		
SC-2	F1	FRP	NG	FRP	3' - 0"	7' - 2"	1 3/4"	5	5	5	LSG	3/4 HR	3	TYPE 1	
SC-3	F1	FRP	NG	FRP	3' - 0"	7' - 2"	1 3/4"	5	5	5	LSG	3/4 HR	3	TYPE 1	
SC-4	F1	FRP	F	FRP	3' - 0"	7' - 2"	1 3/4"	3	3	3			15	TYPE 2	

DOOR LEGEND

AL	ALUMINUM	IGU	INSULATED GLASS UNIT	PCG	POLYCARBONATE GLASS
EX	EXISTING	LSG	LAMINATED SAFETY GLASS	PT	PAINT
FRP	FIBERGLASS REINFORCED PLASTIC	MFR	MANUFACTURER	SST	STAINLESS STEEL
ISU	INSULATED SPANDREL UNIT			TG	TEMPERED GLASS
				TWS	TRANSLUCENT WALL SYSTEM

NOTES:

1. REFER TO DRAWINGS A-005 AND A-006 IN ARCHITECTURAL DRAWING SET FOR TEXT ASSOCIATED WITH ALL NOTE TAGS.

FRAME TYPES

1/4" = 1'-0"



F-1

DOOR TYPES

1/4" = 1'-0"

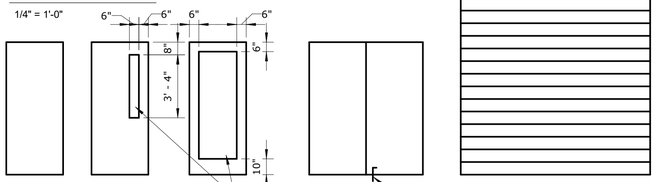

F NG FG F OH

WARNING
IT IS A VIOLATION OF SECTION 7209.2 OF THE NEW YORK STATE EDUCATION LAW FOR ANY PERSON, UNLESS ACTING UNDER THE DIRECTION OF A LICENSED PROFESSIONAL ENGINEER, TO ALTER IN ANY WAY PLANS, SPECIFICATIONS, PLATS OR REPORTS TO WHICH THE SEAL OF A PROFESSIONAL ENGINEER HAS BEEN APPLIED. IF AN ITEM BEARING THE SEAL OF A PROFESSIONAL ENGINEER IS ALTERED, THE ALTERING ENGINEER SHALL AFFIX TO THE ITEM HIS SEAL AND THE NOTATION "ALTERED BY" FOLLOWED BY HIS SIGNATURE, THE DATE, AND A SPECIFIC DESCRIPTION OF THE ALTERATION.

THRESHOLD TYPES

3" = 1'-0"

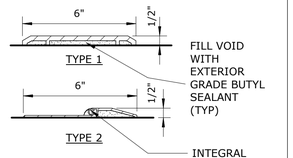

FRAME PROFILES

3" = 1'-0"

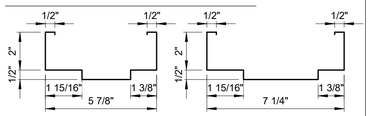

FP-1 FP-2

HEAD

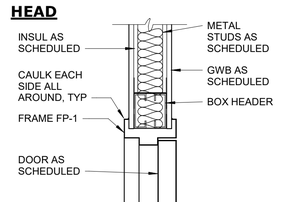

JAMB

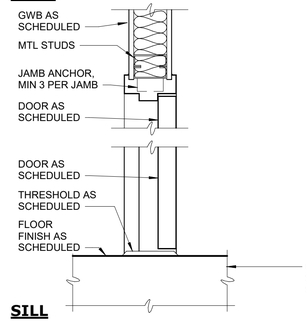

SILL

DOOR IN METAL STUD WALL

DETAIL 1 — 1 1/2" = 1'-0"

HEAD

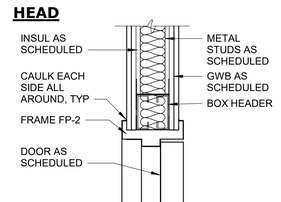

JAMB

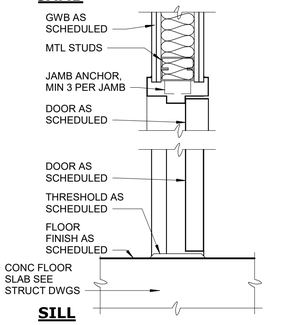

SILL

DOOR IN METAL STUD

DETAIL 2 — 1 1/2" = 1'-0"

HEAD

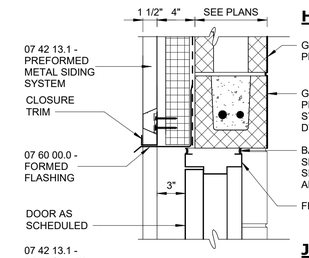

JAMB

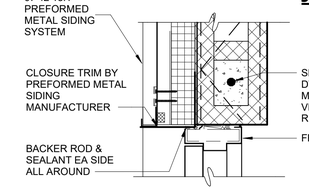

SILL

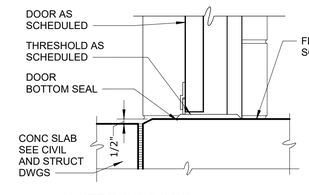

EXTERIOR DOOR

DETAIL 3 — 1 1/2" = 1'-0"

HEAD

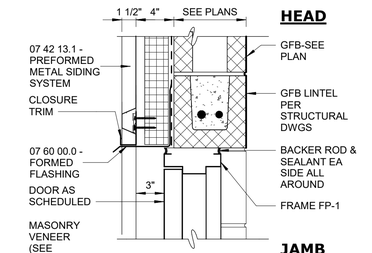

JAMB

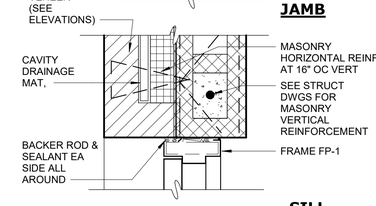

SILL

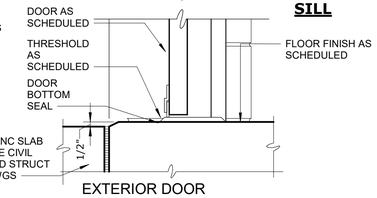

EXTERIOR DOOR

DETAIL 4 — 1 1/2" = 1'-0"

HEAD

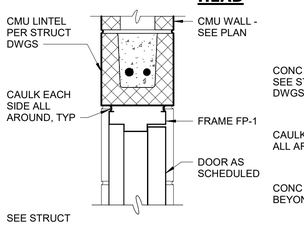

JAMB

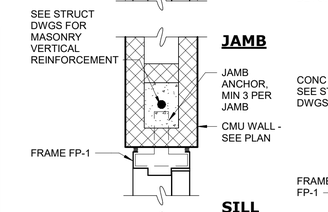

SILL

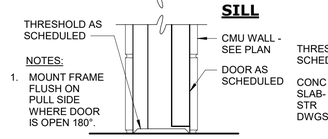

NOTES:
1. MOUNT FRAME FLUSH ON PULL SIDE WHERE DOOR IS OPEN 180°.

INTERIOR DOOR

DETAIL 5 — 1 1/2" = 1'-0"

HEAD

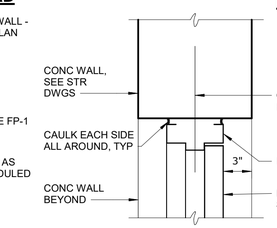

JAMB

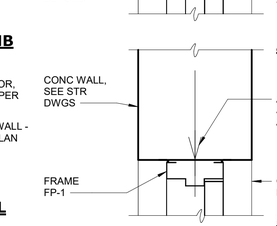

SILL

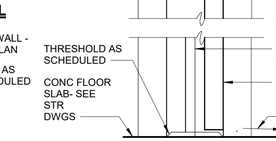

DOOR IN CONC WALL

DETAIL 6 — 1 1/2" = 1'-0"

HEAD

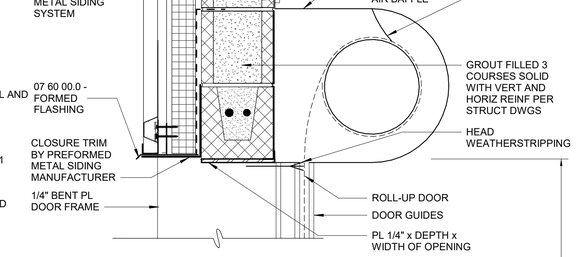

JAMB

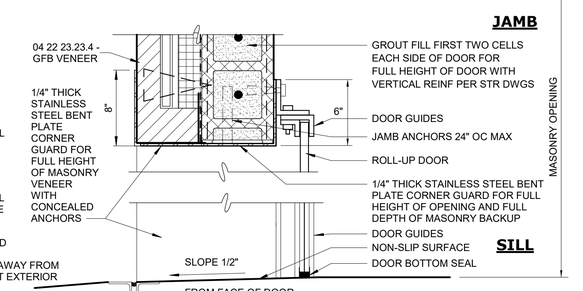

SILL

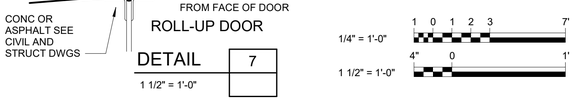

ROLL-UP DOOR

DETAIL 7 — 1 1/2" = 1'-0"

1/4" = 1'-0" — 1 0 1 2 3 7'

1 1/2" = 1'-0" — 4" 0 1'

REV	ISSUED FOR	DATE	BY

PROJECT ENGINEER:	R. FROST
DESIGNED BY:	J. WOJCIESKI
DRAWN BY:	J.MARTINEZ
CHECKED BY:	M. STALLONE

IF THIS BAR DOES NOT MEASURE 1" THEN DRAWING IS NOT TO FULL SCALE — 0 1/2" 1"

BID SET

REGISTERED ARCHITECT JENNIFER WOJCIESKI 034146 STATE OF NEW YORK

Hazen

HAZEN AND SAWYER
498 SEVENTH AVENUE, 11th FLOOR
NEW YORK, NEW YORK 10018

WESTCHESTER JOINT WATER WORKS
MAMARONECK, NY

RYE LAKE WATER FILTRATION PLANT
HARRISON, NY

FILTRATION PLANT
ARCHITECTURAL
DOOR SCHEDULE AND DETAILS

DATE:	FEB 2025
HAZEN NO.:	90388-000
CONTRACT NO.:	A1364-A
DRAWING NUMBER:	A-603

Autodesk Docs://90388-000_Rye_Lake_Filtration/90388-000-WFP-A.rvt
2/19/2025 4:39:16 PM

NO.	DESCRIPTION	FLOOR		BASE		WALL		CEILING			REMARKS
		SUBSTRATE	FINISH	SUBSTRATE	FINISH	SUBSTRATE	FINISH	SUBSTRATE	FINISH	HEIGHT	
001	BACKWASH TANK	-	-	-	-	-	-	-	-	-	
002	FILTERED WATER TRANSFER TANKS	-	-	-	-	-	-	-	-	-	
003	FLOATED SOLIDS BUFFER TANK	-	-	-	-	-	-	-	-	-	
004	UV DISINFECTION SYSTEM	ECF	CH	ECF	-	ECF	ECF	ECF	ECF	23' - 0"	
005	RESIDUALS STORAGE TANKS	-	-	-	-	-	-	-	-	-	
006	STORAGE CLO	ECF	CH	-	-	ECF	ECF	ECF	ECF	23' - 0"	
007	PIPE GALLERY	ECF	CH	-	-	ECF/GFB	ECF/GFB	ECF	ECF	23' - 0"	
008	CORRIDOR	ECF	CH	-	-	ECF/GFB	ECF/GFB	ECF	APC	8' - 0"	ACOUSTICAL PANEL CEILING TYPE 2
009	COMBINED WASTE WASHWATER TANK 1	-	-	-	-	-	-	-	-	-	
010	COMBINED WASTE WASHWATER TANK 2	-	-	-	-	-	-	-	-	-	
101	HYDROFLUOROSILICIC ACID	ECF	CRC	-	-	ECF/GFB	CRC/GFB	MTL	CRC	22' - 0"	
102	SODIUM HYPOCHLORITE	ECF	CRC	-	-	ECF/GFB	CRC/GFB	MTL	CRC	22' - 0"	
103	COAGULANT	ECF	CRC	-	-	ECF/GFB	CRC/GFB	MTL	CRC	22' - 0"	
104	CORROSION INHIBITOR	ECF	CRC	-	-	ECF/GFB	CRC/GFB	MTL	CRC	22' - 0"	
105	POLYMER/ SOFTENER (FUTURE)	ECF	CRC	-	-	ECF/GFB	CRC/GFB	MTL	CRC	22' - 0"	
106	FILTERED WATER PUMPING AND DAF ROOM	ECF	CH	-	-	ECF/GFB	ECFF/GFB	MTL	PT	22' - 0"	
107	SODIUM HYDROXIDE	ECF	CRC	-	-	ECF/GFB	CRC/GFB	MTL	CRC	22' - 0"	
108	CLO	ECF	CFS	-	-	GFB	GFB	MTL	ECF	22' - 0"	
109	DEWATERING ROOM	ECF	CH	-	-	GFB	GFB	MTL	PT	-	
110	FIRE SPRINKLER RISER ROOM	ECF	CFS	-	-	GFB	GFB	ECF	ECF	13' - 0"	
111	CONFERENCE ROOM	ECF	RF	GFB	VB	AWS/GYP	AWS/PT	ECF	APC	9' - 0"	ACOUSTICAL PANEL CEILING TYPE 1
112	LOBBY	ECF	PFT	GFB	VB	GFB/GYP	GFB/PT	ECF	APC	9' - 0"	ACOUSTICAL PANEL CEILING TYPE 1
113	VESTIBULE	ECF	PFT	GFB	VB	GFB/GYP	GFB/PT	ECF	APC	9' - 0"	ACOUSTICAL PANEL CEILING TYPE 1
114	MAINT CLO	ECF	PFT	-	-	GFB/GYP	PWT	ECF	ECF	13' - 0"	
115	WOMENS BATHROOM	ECF	PFT	GFB/GYP	PCB	GFB/GYP	PWT	ECF	APC	8' - 0"	ACOUSTICAL PANEL CEILING TYPE 2
116	WOMENS LOCKER ROOM	ECF	PFT	GFB/GYP	PCB	GFB/GYP	PWT	ECF	APC/PT	8' - 0"	ACOUSTICAL PANEL CEILING TYPE 2
117	MENS BATHROOM	ECF	PFT	GFB/GYP	PCB	GFB/GYP	PWT	ECF	APC	8' - 0"	ACOUSTICAL PANEL CEILING TYPE 2
118	MENS LOCKER ROOM	ECF	PFT	GFB/GYP	PCB	GFB/GYP	PWT	ECF	APC/PT	8' - 0"	ACOUSTICAL PANEL CEILING TYPE 2
119	ELECTRICAL	ECF	CFS	-	-	GFB	GFB	ECF	ECF	13' - 0"	
120	RAW WATER PIPING	ECF	CFS	-	-	GFB	GFB	ECF	ECF	-	
121	STATIC MIXER AND OVERFLOW	-	-	-	-	-	-	-	-	-	
122	DAF TANKS	-	-	-	-	-	-	-	-	-	
123	EQUIPMENT PLATFORM	ECF	CH	-	-	GFB	GFB	ECF	ECF	13' - 0"	
124	EXIT PASSAGEWAY	ECF	CFS	-	-	GFB	GFB	ECF	ECF	13' - 0"	03 35 00.4 - HEAVY-DUTY CONCRETE FLOOR FINISH
201	HVAC	ECF	CFS	-	-	GFB	GFB	ECF	ECF	14' - 4"	
202	AIR SCOUR	ECF	CFS	-	-	GFB	GFB	ECF	ECF	14' - 4"	
203	ELECTRICAL ROOM	ECF	CFS	-	-	GFB	GFB	ECF	ECF	14' - 4"	
204	STORAGE ROOM	ECF	CFS	-	-	GFB	GFB	ECF	ECF	14' - 4"	
205	PROCESS ANALYSIS ROOM	ECF	CRC	GFB	CRC	GFB	GFB	ECF	APC	9' - 0"	ACOUSTICAL PANEL CEILING TYPE 2
206	CONTROL ROOM	ECF	RF	GFB	VB	GFB	GFB	ECF	APC	9' - 0"	ACOUSTICAL PANEL CEILING TYPE 1
207	SCADA ROOM	ECF	CFS	GFB	VB	GFB	GFB	ECF	ECF	14' - 4"	
208	HVAC	ECF	CFS	-	-	GFB	GFB	ECF	PT	-	
209	COPY ROOM	ECF	RF	GFB	VB	GYP	PT	MTL	APC	8' - 0"	ACOUSTICAL PANEL CEILING TYPE 1
210	CHIEF'S OFFICE	ECF	RF	AWS/GYP	VB	AWS/GYP	AWS/PT	MTL	APC	8' - 0"	ACOUSTICAL PANEL CEILING TYPE 1
211	CORRIDOR	ECF	RF	GFB/GYP	VB	GFB/GYP	PT	MTL	APC	8' - 0"	ACOUSTICAL PANEL CEILING TYPE 1
212	MAINT CLO	ECF	PFT	-	-	GFB/GYP	PT	MTL	PT	-	
213	WC	ECF	PFT	-	-	GFB/GYP	PWT	MTL	APC	8' - 0"	ACOUSTICAL PANEL CEILING TYPE 1
214	OPEN OFFICE	ECF	RF	AWS/GYP	VB	AWS/GYP	AWS/PT	MTL	APC	8' - 0"	ACOUSTICAL PANEL CEILING TYPE 1
215	HVAC	ECF	CFS	-	-	GFB	GFB	MTL	PT	-	
216	STOR RM	ECF	CFS	-	-	GFB	GFB	ECF	ECF	14' - 4"	
217	HVAC PLENUM	ECF	CFS	-	-	GFB	GFB	MTL	PT	8' - 0"	
218	OPERATING LEVEL	ECF	CFS	-	-	GFB	GFB	ECF	ECF	-	
C01	CORRIDOR	ECF	CFS	-	-	GFB	GFB	ECF	ECF	13' - 0"	03 35 00.4 - HEAVY-DUTY CONCRETE FLOOR FINISH
C02	CORRIDOR	ECF	CFS	-	-	GFB	GFB	ECF	ECF	13' - 0" - 22' - 0"	03 35 00.4 - HEAVY-DUTY CONCRETE FLOOR FINISH
C03	CORRIDOR	ECF	CFS	-	-	GFB	GFB	MTL	ECF	14' - 4"	03 35 00.4 - HEAVY-DUTY CONCRETE FLOOR FINISH
C04	CORRIDOR	ECF	CFS	-	-	GFB	GFB	MTL	PT	15' - 6" - 18' - 6"	03 35 00.4 - HEAVY-DUTY CONCRETE FLOOR FINISH
SA	STAIR A	ECF	CFS	-	-	GFB	GFB	MTL	PT	19' - 0" - 22' - 4"	03 35 00.4 - HEAVY-DUTY CONCRETE FLOOR FINISH
SB	STAIR B	ECF	CFS	-	-	GFB	GFB	MTL	PT	19' - 0" - 21' - 8"	03 35 00.4 - HEAVY-DUTY CONCRETE FLOOR FINISH
SC	STAIR C	ECF	CFS	-	-	GFB	GFB	MTL	PT	8' - 8"	03 35 00.4 - HEAVY-DUTY CONCRETE FLOOR FINISH

FINISH LEGEND

APC	ACOUSTICAL PANEL CEILING 09 51 01
AWS	ALUMINUM-FRAMED ENTRANCES AND STOREFRONT 08 41 13
CH	CONCRETE HARDENER 03 35 00
CFS	CONCRETE FLOOR SEALER 03 35 00
CRC	CR-CT INTERIOR 09 97 00.0
ECF	EXPOSED CONCRETE FINISH 03 35 00
GCW	GLAZED ALUMINUM CURTAIN WALL SYSTEM 08 44 13
GFB	GROUND FACE BLOCK 04 22 23.23
GRT	GRATINGS 06 51 00
GYP	GYPSUM WALL SYSTEM 09 29 00
MTL	METAL DECKING 05 31 00
MFR	MANUFACTURER
PCB	PORCELAIN TILE COVE BASE 09 31 13
PFT	PORCELAIN FLOOR TILE 09 31 13
PT	PAINTING 09 91 00
PWT	PORCELAIN WALL TILE 09 31 13
RF	RESILIENT FLOORING 09 65 00
TWS	TRANSLUCENT WALL SYSTEMS 08 45 23
VB	VINYL COVE BASE 09 65 00

ROOM FINISH SCHEDULE NOTES:

1. REFER TO DRAWING A-005 AND A-006 FOR ARCHITECTURAL NOTES.

2. FURNITURE LOCATIONS SHOWN ON THE ARCHITECTURAL DRAWINGS ARE FOR COORDINATION PURPOSES. ALL FLOOR, WALL, AND CEILING FINISHES ARE TO BE INSTALLED FOR FULL EXTENT OF SPACE, UNDER AND AROUND PROPOSED FURNITURE.

NOTES:

1. REFER TO DRAWINGS A-005 AND A-006 IN ARCHITECTURAL DRAWING SET FOR TEXT ASSOCIATED WITH ALL NOTE TAGS.

IDENTIFYING DEVICES

SIGN TYPE	NAME	MESSAGE	REMARKS	QUANTITY
A-1	ACCESSIBLE AREA	WOMEN		1
A-2	ACCESSIBLE AREA	MEN		1
A-3	ACCESSIBLE AREA	RESTROOM		1
B	ROOM NAME AND NUMBER		PROVIDE ONE PER ROOM	-
B-1	DOOR NUMBER		PROVIDE ONE PER DOOR	-
B-2	FIRE SPRINKLER ROOM			1
C	FIRE EXTINGUISHER - 3 WAY SIGN		PROVIDE ONE PER FIRE EXTINGUISHER	18
D-1	EXIT			10
D-2	EXIT WITH BRAILLE			10
D-3	AREA OF RESCUE			10
E-1	WARNING	EMERGENCY - SAFETY SHOWER KEEP AREA CLEAR		10
E-2	WARNING	EYE PROTECTION REQUIRED IN THIS AREA		10
E-3	WARNING	EAR PROTECTION REQUIRED IN THIS AREA		10
E-4	WARNING	MOVING DOOR CAN CAUSE SERIOUS INJURY OR DEATH		4
F-1	NOTICE	NO SMOKING ON PREMISES		10
F-2	NOTICE	WATER QUALITY SAMPLE SINK		1
F-3	NOTICE	EMERGENCY SHUT OFF		15
F-4	NOTICE	DO NOT ENTER, AUTHORIZED PERSONELL ONLY		8
F-5	NOTICE	THIS DOOR MUST BE KEPT CLOSED		6
F-6	NOTICE	AVOID CONTAMINATION WASH YOUR HANDS		8
F-7	NOTICE	NOT AN EXIT		6
F-8	NOTICE	SAFETY FIRST REMEMBER WEAR SAFETY EQUIPMENT		10
F-9	CAUTION	NON-POTABLE WATER DO NOT DRINK		2
F-10	NOTICE	FDC - FIRE DEPARTMENT CONNECTION		1
F-11	NOTICE	FACP - FIRE ALARM CONTROL PANEL		1
F-12	NOTICE	FLOOR LOAD CAPACITY		8
F-13	NOTICE	ELEVATOR CAPACITY		3
H-1	DANGER	HIGH VOLTAGE		2
H-2	DANGER	FLAMMABLE		10
H-3	HAZARD	PERMIT REQUIRED CONFINED SPACE DO NOT ENTER		6
H-4	HAZARD	HAZARD RATING SIGN W/ EMERGENCY GUIDE		10
H-5	HAZARD	HAZARD RATING		10
I	STAIR IDENTIFICATION		PROVIDE ONE AT EACH STAIR AT EACH FLOOR	
J	EVACUATION PLAN			8

LOUVER SCHEDULE

TYPE	WIDTH	HEIGHT	FRAME TYPE	REMARKS
L1	8' - 0"	2' - 0"	AL	08 91 20.1 - FIXED LOUVER SIZES
L2	8' - 0"	2' - 8"	AL	08 91 20.1 - FIXED LOUVER SIZES
L3	14' - 0"	2' - 8"	AL	08 91 20.1 - FIXED LOUVER SIZES
L4	36' - 0"	2' - 8"	AL	08 91 20.1 - FIXED LOUVER SIZES
L5	3' - 0"	1' - 4"	AL	08 91 20.1 - FIXED LOUVER SIZES
L6	8' - 0"	4' - 0"	AL	08 91 20.1 - FIXED LOUVER SIZES
L7	8' - 0"	4' - 0"	AL	08 91 20.1 - FIXED LOUVER SIZES
L8	8' - 0"	4' - 0"	AL	08 91 20.1 - FIXED LOUVER SIZES
L9	24' - 0"	2' - 8"	AL	08 91 20.1 - FIXED LOUVER SIZES

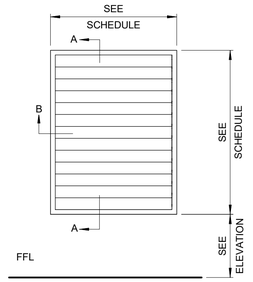

LOUVER TYPES

1/2" = 1'-0"

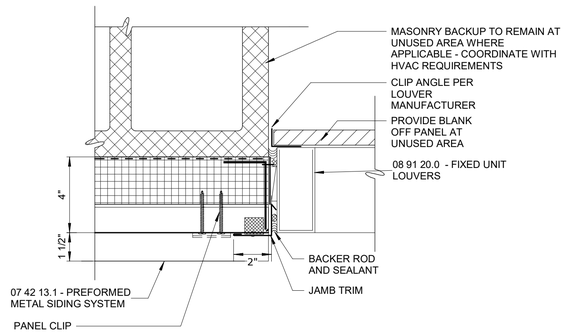

LOUVER JAMB

DETAIL B

3" = 1'-0"

LOUVER HEAD AND SILL

DETAIL A

3" = 1'-0"

3" = 1'-0" 2" 0 2 4 6"

1/2" = 1'-0" 12" 0 1 3'

WARNING
IT IS A VIOLATION OF SECTION 7209.2 OF THE NEW YORK STATE EDUCATION LAW FOR ANY PERSON, UNLESS ACTING UNDER THE DIRECTION OF A LICENSED PROFESSIONAL ENGINEER, TO ALTER IN ANY WAY PLANS, SPECIFICATIONS, PLATS OR REPORTS TO WHICH THE SEAL OF A PROFESSIONAL ENGINEER HAS BEEN APPLIED. IF AN ITEM BEARING THE SEAL OF A PROFESSIONAL ENGINEER IS ALTERED, THE ALTERING ENGINEER SHALL AFFIX TO THE ITEM HIS SEAL AND THE NOTATION "ALTERED BY" FOLLOWED BY HIS SIGNATURE, THE DATE, AND A SPECIFIC DESCRIPTION OF THE ALTERATION.

REV	ISSUED FOR	DATE	BY

PROJECT ENGINEER:	R. FROST
DESIGNED BY:	J. WOJCIESKI
DRAWN BY:	J.MARTINEZ
CHECKED BY:	M. STALLONE
IF THIS BAR DOES NOT MEASURE 1" THEN DRAWING IS NOT TO FULL SCALE	0 1/2" 1"

BID SET

REGISTERED ARCHITECT JENNIFER WOJCIESKI 034146 STATE OF NEW YORK

Hazen

HAZEN AND SAWYER
498 SEVENTH AVENUE, 11th FLOOR
NEW YORK, NEW YORK 10018

WESTCHESTER JOINT WATER WORKS
MAMARONECK, NY

RYE LAKE WATER FILTRATION PLANT
HARRISON, NY

FILTRATION PLANT
ARCHITECTURAL
FINISH, IDENTIFYING DEVICES AND LOUVER SCHEDULES AND DETAILS

DATE:	FEB 2025
HAZEN NO.:	90388-000
CONTRACT NO.:	A1364-A
DRAWING NUMBER:	A-604

Autodesk Docs://90388-000_Rye_Lake_Filtration/90388-000-WFP-A.rvt
2/19/2025 4:39:17 PM

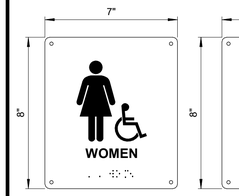

TYPE A-1:
ACCESSIBLE AREAS
SCALE 3" = 1'-0"

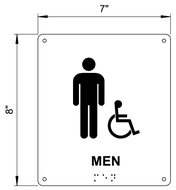

TYPE A-2:
ACCESSIBLE AREAS
SCALE 3" = 1'-0"



TYPE A-3:
ACCESSIBLE AREAS
SCALE 3" = 1'-0"

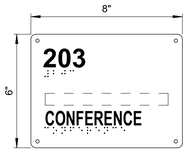

TYPE B:
ROOM NAME & NUMBER
SCALE 3" = 1'-0"



TYPE B-1:
DOOR NUMBER
SCALE 3" = 1'-0"



TYPE B-2:
FIRE SPRINKLER ROOM
SCALE 3" = 1'-0"

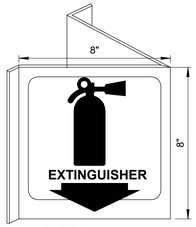

TYPE C:
FIRE EXTINGUISHER
3-WAY SIGN
SCALE 3" = 1'-0"

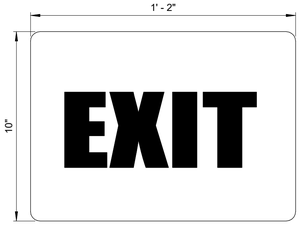

TYPE D-1:
EXIT
SCALE 3" = 1'-0"

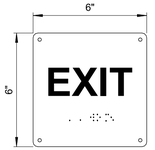

TYPE D-2:
EXIT WITH RAISED BRAILLE
SCALE 3" = 1'-0"



TYPE D-3:
AREA OF RESCUE
SCALE 3" = 1'-0"



TYPE E-1:
WARNING
SCALE 3" = 1'-0"

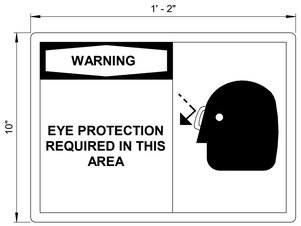

TYPE E-2:
WARNING
SCALE 3" = 1'-0"



TYPE E-3:
WARNING
SCALE 3" = 1'-0"



TYPE F-1:
NOTICE
SCALE 3" = 1'-0"



TYPE F-2:
NOTICE
SCALE 3" = 1'-0"

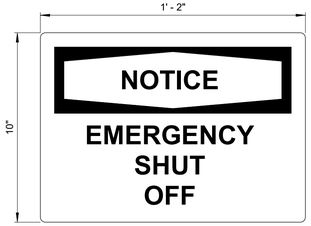

TYPE F-3:
NOTICE
SCALE 3" = 1'-0"

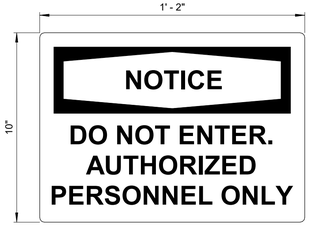

TYPE F-4:
NOTICE
SCALE 3" = 1'-0"



TYPE F-5:
NOTICE
SCALE 3" = 1'-0"



TYPE F-6:
NOTICE
SCALE 3" = 1'-0"

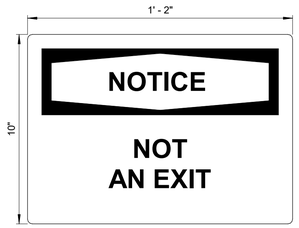

TYPE F-7:
NOTICE
SCALE 3" = 1'-0"



TYPE F-8:
NOTICE
SCALE 3" = 1'-0"



TYPE F-9:
NOTICE
SCALE 3" = 1'-0"

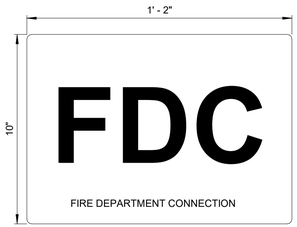

TYPE F-10:
NOTICE
SCALE 3" = 1'-0"

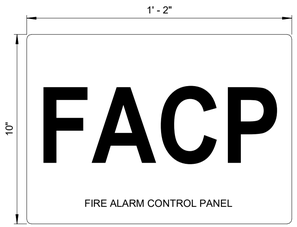

TYPE F-11:
NOTICE
SCALE 3" = 1'-0"

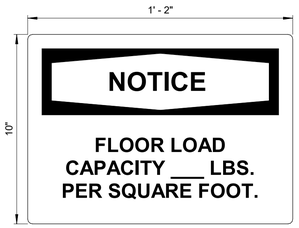

TYPE F-12:
NOTICE
SCALE 3" = 1'-0"

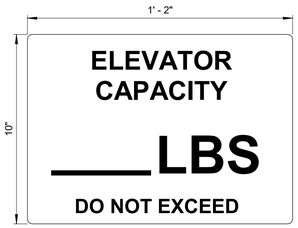

TYPE F-13:
NOTICE
SCALE 3" = 1'-0"

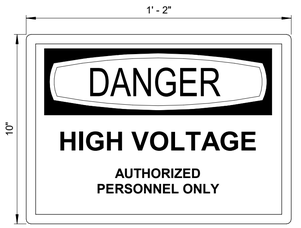

TYPE H-1:
DANGER
SCALE 3" = 1'-0"



TYPE E-4:
WARNING
SCALE 3" = 1'-0"

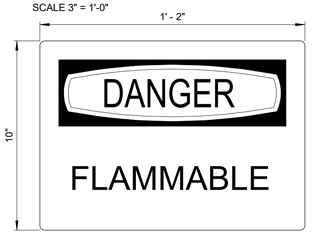

TYPE H-2:
DANGER
SCALE 3" = 1'-0"



TYPE H-3:
DANGER
SCALE 3" = 1'-0"

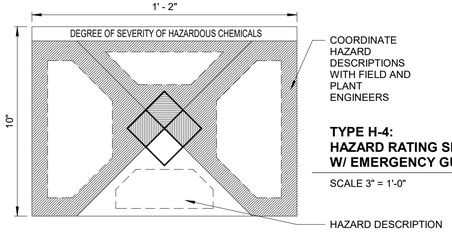

TYPE H-4:
HAZARD RATING SIGN
W/ EMERGENCY GUIDE
SCALE 3" = 1'-0"

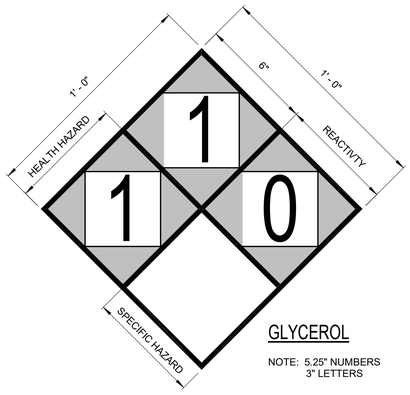

TYPE H-5:
HAZARD RATING
SCALE 3" = 1'-0"



TYPE I:
STAIR IDENTIFICATION
SCALE 3" = 1'-0"

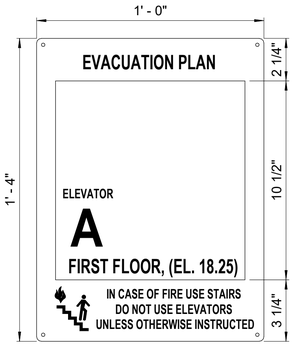

TYPE J:
EVACUATION PLAN
SCALE 3" = 1'-0"

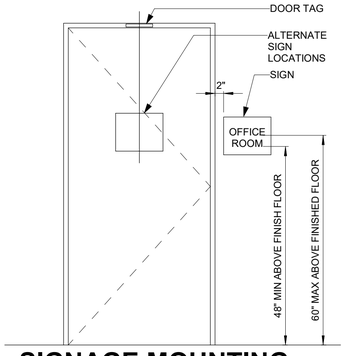

SIGNAGE MOUNTING

NOTE:
1. PROVIDE EQUIVALENT INFORMATION IN TACTILE TEXT DESCRIPTOR COMPLYING WITH ICC A117.1.

3" = 1'-0"

2" 0 2 4 6"

WARNING
IT IS A VIOLATION OF SECTION 7209.2 OF THE NEW YORK STATE EDUCATION LAW FOR ANY PERSON, UNLESS ACTING UNDER THE DIRECTION OF A LICENSED PROFESSIONAL ENGINEER, TO ALTER IN ANY WAY PLANS, SPECIFICATIONS, PLATS OR REPORTS TO WHICH THE SEAL OF A PROFESSIONAL ENGINEER HAS BEEN AFFIXED. IF AN ITEM BEARING THE SEAL OF A PROFESSIONAL ENGINEER IS ALTERED, THE ALTERING ENGINEER SHALL AFFIX TO THE ITEM HIS SEAL AND THE NOTATION "ALTERED BY" FOLLOWED BY HIS SIGNATURE, THE DATE, AND A SPECIFIC DESCRIPTION OF THE ALTERATION.

REV	ISSUED FOR	DATE	BY

PROJECT ENGINEER:	R. FROST
DESIGNED BY:	J. WOJCIESKI
DRAWN BY:	J.MARTINEZ
CHECKED BY:	M. STALLONE
IF THIS BAR DOES NOT MEASURE 1" THEN DRAWING IS NOT TO FULL SCALE	0 1/2" 1"

BID SET

REGISTERED ARCHITECT JENNIFER WOJCIESKI 034146 STATE OF NEW YORK

Hazen

HAZEN AND SAWYER
498 SEVENTH AVENUE, 11th FLOOR
NEW YORK, NEW YORK 10018

WESTCHESTER JOINT WATER WORKS
MAMARONECK, NY

RYE LAKE WATER FILTRATION PLANT
HARRISON, NY

FILTRATION PLANT
ARCHITECTURAL
IDENTIFYING DEVICES

DATE:	FEB 2025
HAZEN NO.:	90388-000
CONTRACT NO.:	A1364-A
DRAWING NUMBER:	A-605

Autodesk Docs://90388-000_Rye_Lake_Filtration/90388-000-WFP-A.rvt
2/19/2025 4:39:17 PM

UL DESIGN C-AJ-1079

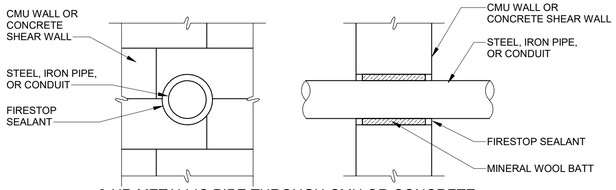

2-HR METALLIC PIPE THROUGH CMU OR CONCRETE SHEAR WALL

DETAIL 1 — 1" = 1'-0"

UL DESIGN C-AJ-5051 OR C-AJ-5042

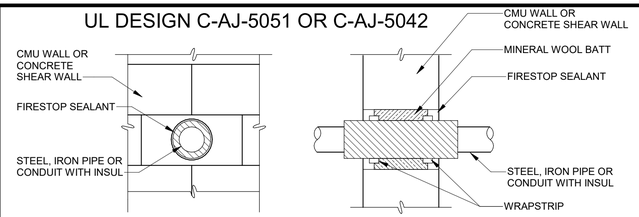

2-HR INSULATED METALLIC PIPE THROUGH CMU OR CONCRETE SHEAR WALL

DETAIL 2 — 1" = 1'-0"

UL DESIGN HW-D-0027

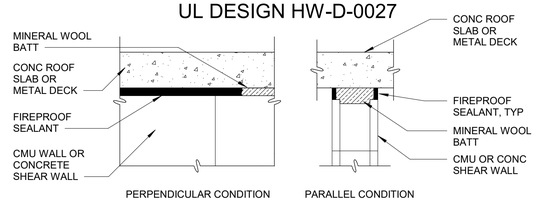

2-HR TOP OF WALL

DETAIL 3 — 1" = 1'-0"

UL DESIGN C-AJ-2031

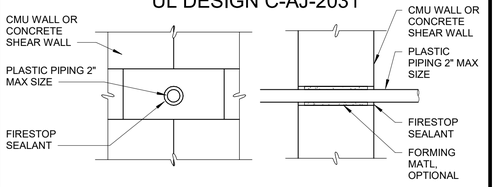

2-HR PLASTIC PIPE THROUGH CMU OR CONCRETE SHEAR WALL 2

DETAIL 4 — 1" = 1'-0"

UL DESIGN C-AJ-2063

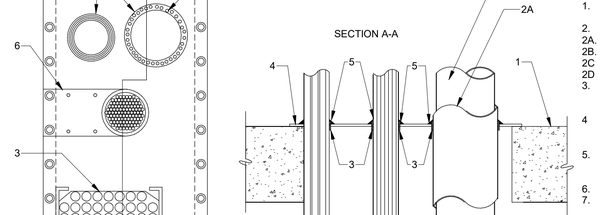

2-HR PLASTIC PIPE THROUGH CMU OR CONCRETE SHEAR WALL 1

DETAIL 5 — 1" = 1'-0"

UL DESIGN C-AJ-3042

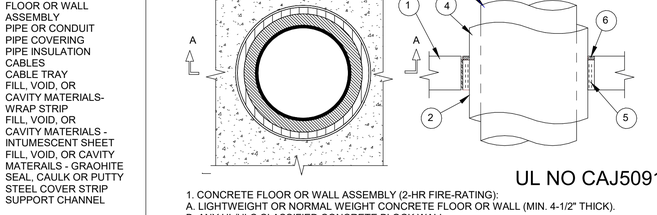

2-HR ELECTRICAL CABLE THROUGH CMU WALL

DETAIL 6 — 1" = 1'-0"

UL DESIGN C-AJ-1388

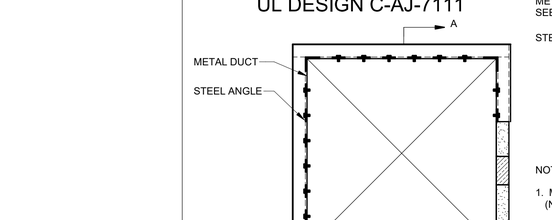

2-HR MULTIPLE METAL CONDUITS THROUGH CONCRETE FLOOR/WALL

DETAIL 7 — 1" = 1'-0"

UL DESIGN FF-D-1039

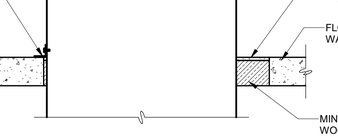

2-HR FIRE RATED JOINT THROUGH CONCRETE FLOOR ASSEMBLY

DETAIL 8 — 1" = 1'-0"

UL DESIGN C-AJ-8016

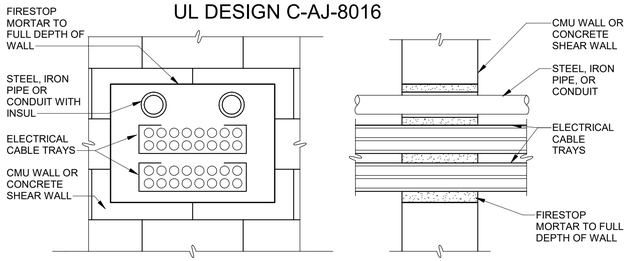

2-HR MULTIPLE PIPE/CABLE TRAY THROUGH CMU /SHEAR WALL

DETAIL 9 — 1" = 1'-0"

UL DESIGN C-AJ-1382

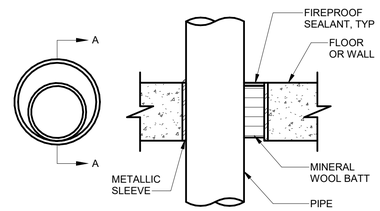

2-HR PIPE THROUGH FLOOR

DETAIL 10 — 12" = 1'-0"

UL DESIGN C-AJ-8033

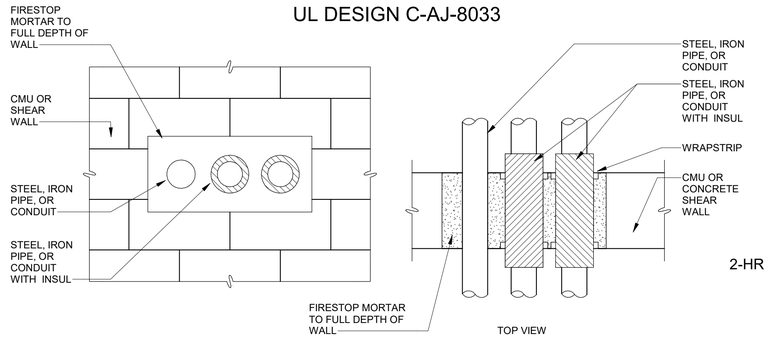

NOTES:

1. REFER TO DRAWINGS A-005 AND A-006 IN ARCHITECTURAL DRAWING SET FOR TEXT ASSOCIATED WITH ALL NOTE TAGS.
2. 2-HOUR FIRESTOPPING DEAIL SHALL APPLY TO ALL PENETRATIONS REQUIRING A 2-HOUR FIRE RATING OR LESS.

2-HR MULTIPLE PIPES THROUGH CMU OR CONCRETE SHEAR WALL

DETAIL 11 — 1" = 1'-0"

UL DESIGN C-AJ-8001

LEGEND

1. FLOOR OR WALL ASSEMBLY
2. PIPE OR CONDUIT
2A. PIPE COVERING
2B. PIPE INSULATION
2C CABLES
2D CABLE TRAY
3. FILL, VOID, OR CAVITY MATERIALS-WRAP STRIP
4 FILL, VOID, OR CAVITY MATERIALS - INTUMESCENT SHEET
5. FILL, VOID, OR CAVITY MATERAILS - GRAOHITE SEAL, CAULK OR PUTTY
6. STEEL COVER STRIP
7. SUPPORT CHANNEL

WARNING
IT IS A VIOLATION OF SECTION 7209.2 OF THE NEW YORK STATE EDUCATION LAW FOR ANY PERSON, UNLESS ACTING UNDER THE DIRECTION OF A LICENSED PROFESSIONAL ENGINEER, TO ALTER IN ANY WAY PLANS, SPECIFICATIONS, PLATS OR REPORTS TO WHICH THE SEAL OF A PROFESSIONAL ENGINEER HAS BEEN APPLIED. IF AN ITEM BEARING THE SEAL OF A PROFESSIONAL ENGINEER IS ALTERED, THE ALTERING ENGINEER SHALL AFFIX TO THE ITEM HIS SEAL AND THE NOTATION "ALTERED BY" FOLLOWED BY HIS SIGNATURE, THE DATE, AND A SPECIFIC DESCRIPTION OF THE ALTERATION.

2-HOUR FLOOR/WALL PENETRATION

DETAIL 12 — 1" = 1'-0"

UL NO CAJ5091

1. CONCRETE FLOOR OR WALL ASSEMBLY (2-HR FIRE-RATING):
A. LIGHTWEIGHT OR NORMAL WEIGHT CONCRETE FLOOR OR WALL (MIN. 4-1/2" THICK).
B. ANY UL/ULC CLASSIFIED CONCRETE BLOCK WALL.
2. OPTIONAL: MAX. 20" NOMINAL DIAMETER STEEL PIPE SLEEVE (SCHEDULE 10 OR HEAVIER).
3. PENETRATING ITEM TO BE ONE OF THE FOLLOWING:
A. MAX. 12" NOMINAL DIAMETER STEEL PIPE (SCHEDULE 10 OR HEAVIER).
B. MAX. 6" NOMINAL DIAMETER COPPER PIPE.
4. MAX. 2" THICK GLASS FIBER INSULATION.
5. MIN. 4" THICKNESS MINERAL WOOL (MIN. 4 PCF DENSITY) TIGHTLY PACKED.
6. MIN. 1/2" DEPTH HILTI FS-ONE INTUMESCENT OR EQUAL FIRESTOP SEALANT. FIRESTOP COLOR TO MATCH MORTAR COLOR.

2-HR INSULATED METAL PIPE

DETAIL 13 — NTS

UL DESIGN C-AJ-7111

NOTES:

1. MAXIMUM 30" X 30" RECTANGULAR STEEL DUCT (MIN. 24 GUAGE). (NOTE: NOT FOR USE IN DUCT SYSTEM CONTAINING A DAMPER).

2-HR METAL DUCT (WITHOUT DAMPER) THROUGH CONCRETE FLOOR/WALL

DETAIL 14 — 1" = 1'-0"

1" = 1'-0" 12" 6 0 1'

REV	ISSUED FOR	DATE	BY

PROJECT ENGINEER:	R. FROST
DESIGNED BY:	J. WOJCIESKI
DRAWN BY:	J.MARTINEZ
CHECKED BY:	M. STALLONE

IF THIS BAR DOES NOT MEASURE 1" THEN DRAWING IS NOT TO FULL SCALE — 0 1/2" 1"

BID SET

REGISTERED ARCHITECT JENNIFER WOJCIESKI 034146 STATE OF NEW YORK

Hazen
HAZEN AND SAWYER
498 SEVENTH AVENUE, 11th FLOOR
NEW YORK, NEW YORK 10018

WESTCHESTER JOINT WATER WORKS
MAMARONECK, NY

RYE LAKE WATER FILTRATION PLANT
HARRISON, NY

FILTRATION PLANT
ARCHITECTURAL
FIRESTOPPING DETAILS

DATE:	FEB 2025
HAZEN NO.:	90388-000
CONTRACT NO.:	A1364-A
DRAWING NUMBER:	A-606

Autodesk Docs://90388-000_Rye_Lake_Filtration/90388-000-WFP-A.rvt
2/19/2025 4:39:18 PM

GENERAL STRUCTURAL NOTES

G-1 THESE NOTES ARE GENERAL AND SUPPLEMENT THE SPECIFICATIONS. THESE NOTES APPLY TO THE ENTIRE PROJECT UNLESS MODIFIED OR NOTED OTHERWISE IN THE CONTRACT DOCUMENTS.

G-2 STANDARD DETAILS SHALL BE USED WHEN REFERRED TO OR WHEN NO MORE RESTRICTIVE OR DIFFERENT DETAILS ARE SHOWN ON THE DRAWINGS.

G-3 DESIGN IS IN ACCORDANCE WITH AND CONSTRUCTION SHALL COMPLY WITH THE PROVISIONS OF THE BUILDING CODE OF NEW YORK STATE. THE DESIGN LOADS AND OTHER DESIGN VALUES GIVEN IN NOTES G-4 THROUGH G-8 WERE USED FOR DESIGN OF STRUCTURES UNLESS NOTED OTHERWISE ON THE DRAWINGS.

G-4 LIVE LOAD ON STAIRS AND PLATFORMS 100 PSF. FOR ADDITIONAL LIVE LOAD INFORMATION SEE LIVE LOAD PLANS ON S-002.

G-5 SNOW LOAD:

GROUND SNOW LOAD (Pg) = 30 PSF
FLAT-ROOF SNOW LOAD (Pf) = 23 PSF
SLOPED ROOF SNOW LOAD (Ps) = 23 PSF
SNOW EXPOSURE FACTOR (Ce) = 1
SNOW LOAD IMPORTANCE FACTOR (Is) = 1.1
THERMAL FACTOR (Ct) = 1
SEE PLANS FOR ADDITIONAL SNOW LOADS.

G-6 WIND DESIGN CRITERIA:

BASIC DESIGN WIND SPEED (V) = 125 MPH
RISK CATEGORY = III
WIND EXPOSURE = B

PARAMETER / STRUCTURE	PRESSURE COEFFICIENT GCpi	WIND DESIGN PRESSURE	COMPONENTS AND CLADDING	LATERAL LOAD RESISTING SYSTEM
FILTRATION PLANT	±0.55	28 PSF	24 PSF	BRACED FRAME

G-7 SEISMIC LOAD:

RISK CATEGORY = III
SEISMIC IMPORTANCE FACTOR (Ie) = 1.25
SITE CLASS = D
MAPPED SPECTRAL RESPONSE ACCELERATIONS (Ss/S1) = 0.285/0.06
SPECTRAL RESPONSE ACCELERATIONS (SMS/SM1) = 0.448/0.145
SPECTRAL RESPONSE COEFFICIENTS (SDS/SD1) = 0.299/0.097
SEISMIC DESIGN CATEGORY = B

PARAMETER / STRUCTURE	BASIC STRUCTURAL SYSTEM	DESIGN BASE SHEAR	SEISMIC RESPONSE COEFFICIENT Cs	RESPONSE MODIFICATION COEFFICIENT R	ANALYSIS PROCEDURE
FILTRATION PLANT	G	200 K	0.13	3	EQUIVALENT LATERAL FORCE

G-8 RAIN LOAD:
RAIN INTENSITY (i) = 2.61 IN/HR

G-9 ALL DIMENSIONS INDICATED FOR EXISTING STRUCTURES SHALL BE VERIFIED BY FIELD MEASUREMENT. ALL DIMENSIONS THAT ARE CONTROLLED BY OR RELATED TO EQUIPMENT SHALL BE VERIFIED BY THE CONTRACTOR WITH THE MANUFACTURER SHOP DRAWINGS PRIOR TO CONSTRUCTION.

G-10 THE CONTRACTOR IS RESPONSIBLE FOR VERIFYING ALL EXISTING INFORMATION IN THE FIELD AS REQUIRED FOR NEW WORK.

G-11 IF A CONFLICT IS FOUND BETWEEN DIFFERENT PORTIONS OF THE CONTRACT DOCUMENTS, THE CONTRACTOR SHALL NOTIFY THE ENGINEER IMMEDIATELY. CONTINUED CONSTRUCTION OF THE AREA IN CONFLICT SHALL BE AT THE CONTRACTOR'S OWN RISK UNTIL THE CONFLICT IS RESOLVED.

G-12 EQUIPMENT ANCHOR SIZES, TYPES, EMBEDMENT AND PATTERNS SHALL BE VERIFIED WITH THE MANUFACTURER. ALL ANCHOR PATTERNS SHALL BE TEMPLATED TO INSURE ACCURACY OF PLACEMENT.

G-13 STRUCTURAL DRAWINGS SHALL BE USED IN COORDINATION WITH THE DRAWINGS OF ALL OTHER DISCIPLINES AND MANUFACTURER'S SHOP DRAWINGS.

G-14 STRUCTURES HAVE BEEN DESIGNED FOR OPERATIONAL LOADS ON THE COMPLETED STRUCTURE. DURING CONSTRUCTION, THE STRUCTURES SHALL BE PROTECTED BY BRACING AND TEMPORARY SUPPORTS WHEREVER EXCESSIVE CONSTRUCTION LOADS MAY OCCUR. OVERSTRESSING OF ANY STRUCTURAL ELEMENT IS PROHIBITED.

G-15 IF CONTRACTOR DESIRES TO TEMPORARILY PLACE OR MOVE LOADS ON OR ADJACENT TO EXISTING STRUCTURES OR UTILITIES DURING CONSTRUCTION PROCESS, CONTRACTOR IS EXCLUSIVELY RESPONSIBLE FOR MAINTAINING STRUCTURAL INTEGRITY AND AVOIDING OVERSTRESSING AND DAMAGING EXISTING STRUCTURES AND UTILITIES. CONTRACTOR SHALL SUBMIT STRUCTURAL CALCULATIONS AND DRAWINGS VERIFYING THAT PROPOSED CONSTRUCTION (INCLUDING APPLICATION OF TEMPORARY CONSTRUCTION LOADS) WILL NOT OVERSTRESS OR DAMAGE EXISTING STRUCTURES AND UTILITIES. DRAWINGS AND CALCULATIONS SHALL BE SEALED BY A PROFESSIONAL ENGINEER CURRENTLY REGISTERED IN THE STATE OF NEW YORK.

G-16 NO BACKFILL SHALL BE PLACED AGAINST ANY SUBSTRUCTURE WALLS UNLESS ALL ADJACENT SUPPORTING ELEMENTS HAVE ACHIEVED DESIGN STRENGTH, OR WALLS HAVE BEEN PROPERLY BRACED, AND IN ANY CASE NOT SOONER THAN 28 DAYS AFTER THE PLACING OF CONCRETE UNLESS APPROVED BY THE ENGINEER. SUPPORTING ELEMENTS SHALL INCLUDE ADJACENT WALLS, SLABS, BEAMS AND COLUMNS.

G-17 LEAKAGE TESTING OF HYDRAULIC STRUCTURES SHALL NOT BEGIN UNTIL ALL STRUCTURAL ELEMENTS HAVE REACHED THE SPECIFIED MINIMUM CONCRETE STRENGTH. BACKFILL SHALL NOT BE PLACED AROUND ANY HYDRAULIC STRUCTURE UNTIL THE LEAKAGE TEST HAS BEEN COMPLETED UNLESS APPROVED BY THE ENGINEER.

STRUCTURAL METALS

M-1 DETAIL, FABRICATE, AND ERECT STRUCTURAL STEEL IN ACCORDANCE WITH ANSI/AISC 360 SPECIFICATION FOR STRUCTURAL STEEL BUILDINGS, LATEST EDITION.

M-2 STEEL MATERIAL:

A)	STRUCTURAL HSS:	ASTM A500, GRADE C (46/50 KSI) OR A1085 GRADE A (50 KSI)
B)	STRUCTURAL PIPE:	ASTM A53, GRADE B (35 KSI)
C)	PLATES, BARS AND ANGLES:	ASTM A36 UNO (36 KSI)
D)	STRUCTURAL W, C, & MC SHAPES:	ASTM A992 (50 KSI)
E)	STRUCTURAL M & S SHAPES:	ASTM A36 (36 KSI)
F)	STRUCTURAL HP	ASTM A572 GRADE 50 (50 KSI)
G)	ANCHOR RODS	ASTM F1554 GRADE 55 (55 KSI)

WARNING
IT IS A VIOLATION OF SECTION 7209.2 OF THE NEW YORK STATE EDUCATION LAW FOR ANY PERSON, UNLESS ACTING UNDER THE DIRECTION OF A LICENSED PROFESSIONAL ENGINEER, TO ALTER IN ANY WAY PLANS, SPECIFICATIONS, PLATS OR REPORTS TO WHICH THE SEAL OF A PROFESSIONAL ENGINEER HAS BEEN APPLIED. IF AN ITEM BEARING THE SEAL OF A PROFESSIONAL ENGINEER IS ALTERED, THE ALTERING ENGINEER SHALL AFFIX TO THE ITEM HIS SEAL AND THE NOTATION "ALTERED BY" FOLLOWED BY HIS SIGNATURE, THE DATE, AND A SPECIFIC DESCRIPTION OF THE ALTERATION.

REV	ISSUED FOR	DATE	BY

PROJECT ENGINEER: R. FROST
DESIGNED BY: J. EDER
DRAWN BY: R. HERNANDEZ
CHECKED BY: C. PHILLIPS
IF THIS BAR DOES NOT MEASURE 1" THEN DRAWING IS NOT TO FULL SCALE 0 1/2" 1"

BID SET

STATE OF NEW YORK · JC EDER · 097035 · LICENSED PROFESSIONAL ENGINEER

Hazen
HAZEN AND SAWYER
498 SEVENTH AVENUE, 11th FLOOR
NEW YORK, NEW YORK 10018

WESTCHESTER JOINT WATER WORKS
MAMARONECK, NY

RYE LAKE WATER FILTRATION PLANT
HARRISON, NY

STRUCTURAL
GENERAL STRUCTURAL NOTES

DATE: FEB 2025
HAZEN NO.: 90388-000
CONTRACT NO.: A1364-A
DRAWING NUMBER: S-001

STRUCTURAL METALS, CONTINUED

M-3 PROVIDE MINIMUM 3/4" DIAMETER ASTM F3125 GRADE A325 TYPE 1 OR GRADE F1852 TYPE 1 HIGH STRENGTH BOLTS WITH SNUG TIGHTENED TYPE N CONNECTIONS FOR STRUCTURAL STEEL UNLESS NOTED OTHERWISE. HOLES FOR BOLTS SHALL BE STANDARD SIZE UNLESS NOTED OTHERWISE.

M-4 PROVIDE TYPICAL STEEL BEAM CONNECTIONS FOR A CAPACITY OF NOT LESS THAN ONE HALF OF THE TOTAL UNIFORM LOAD CAPACITY TABULATED IN THE AISC TABLES FOR ALLOWABLE LOADS OF BEAMS UNLESS NOTED OTHERWISE.

M-5 DO NOT PAINT STEEL SURFACES WHICH ARE TO BE WELDED OR ARE TO BE ENCASED IN CONCRETE.

M-6 ALL STAINLESS STEEL FABRICATIONS EXPOSED TO UNDERWATER SERVICE SHALL BE TYPE 316. ALL OTHER STAINLESS STEEL FABRICATIONS SHALL BE TYPE 304 UNLESS NOTED OTHERWISE.

M-7 ALUMINUM SHALL BE ALLOY 6061-T6 UNLESS NOTED OTHERWISE.

M-8 ALL BOLTS, ANCHORS, AND CONCRETE ANCHORS CONNECTING ALUMINUM SHALL BE STAINLESS STEEL TYPE 316 FOR UNDERWATER APPLICATIONS AND TYPE 304 FOR ALL OTHER APPLICATIONS.

M-9 ALUMINUM SHALL BE ISOLATED FROM CONTACT WITH CONCRETE AND DISSIMILAR METALS.

M-10 ALL GROOVE AND BUTT WELDS SHALL BE FULL PENETRATION.

M-11 FILLET WELD SIZES SHALL NOT BE LESS THAN THE MINIMUM SIZE REQUIRED BY AISC CODE FOR PLATE SIZES TO BE CONNECTED AND SHALL BE APPLIED TO THE ENTIRE JOINT CONTACT LENGTH, AND NOT LESS THAN 3/16".

M-12 ALL WELDS SHALL BE PERFORMED IN THE SHOP UNLESS NOTED BY A FIELD WELD SYMBOL OR APPROVED BY ENGINEER.

M-13 BOTTOM SURFACES OF BASE PLATES SHALL BE GROUTED TO ENSURE FULL BEARING CONTACT WITH CONCRETE SLAB.

M-14 WHENEVER ONE MEMBER IS FASTENED TO ANOTHER WITH FASTENINGS (BOLTS, WELDS, ETC.) SET AT A UNIFORM SPACING, A MINIMUM OF TWO FASTENINGS PER PIECE SHALL BE CONNECTED AND THE FIRST AND LAST FASTENINGS SHALL BE LOCATED NOT TO EXCEED 0.25 OF FASTENER SPACING FROM EACH END.

M-15 GRATING PANELS SHALL BE CONFINED TO PREVENT MOVEMENT PER STANDARD DETAIL S-05-0706. USE OF GRATING CLIP ATTACHMENT IS NOT ACCEPTABLE TO PREVENT GRATING MOVEMENT.

FOUNDATIONS

F-1 CONCRETE (CAST-IN-PLACE) NOTES APPLY TO FOUNDATIONS.

F-2 ALLOWABLE SOIL BEARING PRESSURE

PARAMETER / STRUCTURE	ALLOWABLE SOIL BEARING PRESSURE
FILTRATION PLANT	6000 PSF
WASTE WASHWATER TANKS	6000 PSF

F-3 MINIMUM DEPTH FROM ADJACENT FINISHED GRADE TO BOTTOM OF FOUNDATION (FROST DEPTH) = 48 INCHES.

F-4 DEWATERING OPERATIONS MAY END WHEN SLABS AT GRADE ARE FULLY CURED. WHERE THERE IS NO SLAB AT GRADE, DEWATERING OPERATIONS MAY END WHEN THE FULL HEIGHT OF THE WALL IS FULLY CURED.

PRECAST CONCRETE

PC-1 PRECAST STRUCTURAL MEMBERS SHALL BE DESIGNED BY A PROFESSIONAL ENGINEER REGISTERED IN THE STATE OF NEW YORK. OPENINGS TO ALLOW VENT PIPES, STRUCTURAL STEEL BRACING AND COLUMNS TO PASS THROUGH SHALL BE PROVIDED.

PC-2 PRECAST VAULTS AND MANHOLES SHALL BE DESIGNED BY A PROFESSIONAL ENGINEER REGISTERED IN THE STATE OF NEW YORK. STRUCTURAL DRAWINGS SHALL INDICATE DESIGN IS IN COMPLIANCE WITH THE BUILDING CODE OF NEW YORK STATE.

CONCRETE (CAST-IN-PLACE)

C-1 DESIGN OF CONCRETE ELEMENTS INCLUDING WALLS, FORMED SLABS, BEAMS, AND COLUMNS IS IN ACCORDANCE WITH ACI 318 (CODE REQUIREMENTS FOR STRUCTURAL CONCRETE) AND 350 (CODE REQUIREMENTS FOR ENVIRONMENTAL ENGINEERING CONCRETE STRUCTURES).

C-2 CONCRETE STRENGTH CLASSES (28-DAY COMPRESSIVE STRENGTH):

A) CLASS A1 CONCRETE (4,500 PSI): NORMAL WEIGHT STRUCTURAL CONCRETE TO BE USED IN ALL STRUCTURES QUALIFYING AS ENVIRONMENTAL CONCRETE STRUCTURES THAT ARE DESIGNED IN ACCORDANCE WITH ACI 350 INCLUDING PUMP STATIONS, TANKS, BASINS, PROCESS STRUCTURES, AND ANY STRUCTURES CONTAINING FLUID OR PROCESS CHEMICALS OR OTHER MATERIALS USED IN TREATMENT PROCESS.

B) CLASS A2 CONCRETE (4,500 PSI): NORMAL WEIGHT STRUCTURAL CONCRETE IN ALL STRUCTURES OTHER THAN STRUCTURES QUALIFYING AS ENVIRONMENTAL CONCRETE STRUCTURES AS DESCRIBED ABOVE, AND FOR ALL SIDEWALKS, CURB AND GUTTERS, AND PAVEMENT.

C) CLASS A3 CONCRETE (4,500 PSI): NORMAL WEIGHT STRUCTURAL CONCRETE TO BE USED FOR INTERIOR SLABS WHERE A TYPE "D" STEEL TROWELED FINISH OR TYPE "G" HARDENED FINISH IS REQUIRED. CLASS A3 CONCRETE SHALL NOT CONTAIN ENTRAINED AIR.

D) CLASS A6 CONCRETE (4500 PSI): NSF 61 CERTIFIED NORMAL WEIGHT STRUCTURAL CONCRETE TO BE USED FOR CLASS A6 CONCRETE IN LOCATIONS INDICATED ON CONTRACT DRAWINGS.

E) CLASS B CONCRETE (3,000 PSI): NORMAL WEIGHT STRUCTURAL CONCRETE USED FOR DUCT BANK ENCASEMENTS, CATCH BASINS, FENCE AND GUARD POST EMBEDMENT, CONCRETE FILL, AND OTHER AREAS WHERE SPECIFICALLY NOTED ON CONTRACT DRAWINGS.

C-3 ALL BAR REINFORCING SHALL CONFORM TO ASTM A615, GRADE 60 UNLESS NOTED OTHERWISE. WELDED WIRE FABRIC SHALL CONFORM TO ASTM A1064.

C-4 CONCRETE COVER FOR REINFORCING (UNLESS NOTED OTHERWISE ON THE DRAWINGS):

A)	CONCRETE DEPOSITED DIRECTLY AGAINST SOIL:	3"
B)	CONCRETE EXPOSED TO WEATHER (#5 OR SMALLER):	1 1/2"
	CONCRETE EXPOSED TO WEATHER (#6 OR LARGER):	2"
C)	SLABS:	1 1/2"
	AT SURFACES CONTACTING FLUID:	2"
D)	BEAMS AND COLUMNS (TO MAIN REINFORCEMENT):	2"
	BEAMS AND COLUMNS (TO COLUMN TIES OR STIRRUPS):	1 1/2"
E)	WALLS 12" OR MORE:	2"
	WALLS LESS THAN 12" (#5 OR SMALLER):	1 1/2"
	WALLS LESS THAN 12" (#6 OR LARGER):	2"
F)	FOR SURFACES EXPOSED TO FLUID IN BEAMS, COLUMNS AND WALLS:	ADD 1/2" TO ABOVE VALUES

C-5 SPLICES SHALL BE CLASS "B" CONFORMING TO THE PROVISIONS OF ACI 318 UNLESS NOTED OTHERWISE. SPLICE LENGTH FOR TWO DIFFERENT SIZED BARS TO BE LAP SPLICED TOGETHER SHALL BE THE LENGTH OF THE LARGER BAR UNLESS NOTED OTHERWISE.

C-6 CONSTRUCTION JOINTS SHALL BE LOCATED AS SHOWN ON THE DRAWINGS. CONSTRUCTION JOINTS NOT SHOWN SHALL BE SUBMITTED BY THE CONTRACTOR FOR THE APPROVAL OF THE ENGINEER PRIOR TO SUBMITTING REBAR SHOP DRAWINGS.

CONCRETE (CAST-IN-PLACE), CONTINUED

C-7 ALL JOINTS WHICH ARE IN MEMBERS IN CONTACT WITH LIQUID OR BELOW GRADE SHALL HAVE A WATERSTOP. CONSTRUCTION JOINTS SHALL HAVE A 6" PVC RIBBED WATERSTOP. EXPANSION JOINTS SHALL HAVE A 9" PVC CENTER BULB RIBBED WATERSTOP. IN VERTICAL JOINTS, WATERSTOPS SHALL TERMINATE NO LESS THAN 18" ABOVE THE MAXIMUM WATER SURFACE OR 18" ABOVE GRADE, WHICHEVER IS HIGHER.

C-8 ALL EXPOSED CORNERS SHALL HAVE A 3/4" CHAMFER.

C-9 EQUIPMENT SUPPORTS, ANCHORAGES, OPENINGS, RECESSES AND REVEALS NOT SHOWN ON THE STRUCTURAL DRAWINGS BUT REQUIRED BY OTHER CONTRACT DOCUMENTS, SHALL BE INSTALLED PRIOR TO PLACING CONCRETE.

C-10 REINFORCING BARS AND ACCESSORIES SHALL NOT BE IN CONTACT WITH ANY METAL PIPE, PIPE FLANGE, METAL CONDUIT, OR OTHER METAL PARTS EMBEDDED IN CONCRETE. A MINIMUM CLEARANCE OF 2" SHALL BE PROVIDED.

C-11 CONDUITS AND OTHER SIMILAR ITEMS EMBEDDED IN OR PENETRATING THROUGH CONCRETE SHALL BE SPACED ON CENTER NOT LESS THAN 3 TIMES THEIR OUTSIDE DIMENSION, BUT NOT LESS THAN 2 1/2" CLEAR. WHEN SUCH ITEMS ARE EMBEDDED IN WALLS OR SLABS, THEY SHALL NOT OCCUPY MORE THAN 1/3 OF THE MEMBER THICKNESS.

C-12 AT ALL TYPICAL CURBS, EQUIPMENT PADS, AND PIPE SUPPORT PIERS, REINFORCING DOWELS SHOWN MAY BE REPLACED WITH MATCHING DOWELS SET IN EPOXY IN DRILLED HOLES AS SPECIFIED. DOWELS LOCATED CLOSER THAN 3" FROM ANY EDGE OF CONCRETE SHALL NOT BE REPLACED WITH DRILLED DOWELS.

C-13 ADJUST THE LOCATION OF DOWELS OR ANCHORS PLACED INTO HARDENED CONCRETE AS NEEDED TO AVOID DRILLING THROUGH ANY REINFORCING BARS. IF THE LOCATION NEEDS TO BE MODIFIED, CONTACT THE ENGINEER. CONTRACTOR SHALL USE NON-DESTRUCTIVE MEANS TO FIELD LOCATE REINFORCEMENT PRIOR TO DRILLING HOLES FOR DOWELS OR ANCHORS.

C-14 CLEAR DISTANCE FROM ANCHOR RODS TO ANY CONCRETE EDGE SHALL BE 4" MINIMUM UNLESS NOTED OTHERWISE.

MASONRY

M-1 MASONRY MORTAR SHALL BE ASTM C 270 TYPE "S" AND MASONRY GROUT SHALL CONFORM TO REQUIREMENTS OF ASTM C 476.

M-2 CONCRETE MASONRY UNIT NET AREA COMPRESSIVE STRENGTH SHALL BE 2,000 PSI WHEN TESTED IN ACCORDANCE WITH ASTM C 140. COMPLETE TEST REPORTS SHALL BE SUBMITTED TO THE BUILDING INSPECTOR.

M-3 HORIZONTAL JOINT REINFORCEMENT SHALL BE AS SHOWN ON ARCHITECTURAL DRAWINGS. HORIZONTAL JOINT REINFORCEMENT SHALL CONFORM TO ASTM A 951 AND REINFORCEMENT STEEL SHALL CONFORM TO REQUIREMENTS OF ASTM A 615 FOR GRADE 60 BILLET STEEL.

M-4 EXTERIOR CONCRETE MASONRY UNIT WALLS SHALL BE REINFORCED WITH #5 VERTICAL BARS AT 32 INCHES ON CENTER, CENTERED IN FULLY GROUTED CELLS, UNLESS SHOWN OTHERWISE ON THE DRAWINGS. INTERIOR CONCRETE MASONRY UNIT WALLS SHALL BE REINFORCED WITH #5 VERTICAL BARS AT 48 INCHES ON CENTER, CENTERED IN FULLY GROUTED CELLS, UNLESS SHOWN OTHERWISE ON DRAWINGS.

M-5 VERTICAL REINFORCEMENT SHALL BE PROVIDED AT WALL ENDS, CORNERS, AND INTERSECTIONS AND IMMEDIATELY ADJACENT TO ALL OPENINGS, CONTROL JOINTS, AND COLUMNS. SEE STANDARD DETAILS FOR MASONRY OPENINGS.

M-6 MASONRY REINFORCEMENT LAP SPLICES SHALL BE CONTACT SPLICES. UNLESS NOTED OTHERWISE, LENGTH OF SPLICE FOR SINGLE BARS IN CENTER OF CELLS OF 8" OR LARGER CMU SHALL BE A MINIMUM OF 25 INCHES FOR #4 BARS, 32 INCHES FOR #5 BARS, AND 50 INCHES FOR #6 BARS. LENGTH OF SPLICE FOR OTHER CONDITIONS SHALL BE AS SHOWN ON THE DRAWINGS.

M-7 BOND BEAM REINFORCEMENT SHALL BE CONTINUOUS AT ALL WALL INTERSECTIONS, SEE STANDARD DETAILS. WHERE BOND BEAM REINFORCEMENT IS INTERRUPTED BY OPENINGS REINFORCEMENT SHALL BE PROVIDED WITH 90° HOOKS AT EACH ENDS. BOND BEAM REINFORCEMENT SHALL BE 2-#5 BARS UNLESS OTHERWISE INDICATED.

M-8 DOWELS SHALL BE EITHER CAST INTO CONCRETE OR INSTALLED WITH A DOWEL ADHESIVE SYSTEM. IF CAST, DOWELS SHALL BE EMBEDDED IN STEM WALL OR FOUNDATION SLAB A MINIMUM 9" AND SHALL HAVE A STD 90° HOOK. IF INSTALLED WITH A DOWEL ADHESIVE SYSTEM DOWELS SHALL BE STRAIGHT BARS EMBEDDED A MINIMUM OF 10" INTO CONCRETE.

M-9 VENEER SUPPORT STEEL ANGLES SHALL BE GALVANIZED L6x6x3/8 WITH 1/2" DIAMETER GALVANIZED ADHESIVE ANCHORS AT 24" ON CENTER AND 4" EMBEDMENT (MIN 3 ANCHORS PER ANGLE). ANGLE SHALL EXTEND 8" BEYOND OPENINGS.

M-10 MASONRY LINTELS SHALL BE EITHER PRECAST CONCRETE "U" SECTIONS OR CONCRETE MASONRY "U" BLOCKS UNLESS SHOWN OTHERWISE.

M-11 FOR CONCRETE MASONRY "U" BLOCK LINTELS SEE STANDARD DETAILS FOR MASONRY OPENINGS AND THE CMU OPENING REINFORCEMENT SCHEDULE, UNLESS OTHERWISE NOTED ON DRAWINGS.

NONSTRUCTURAL COMPONENT ANCHORAGE

A-1 ANCHORAGE OF ALL ARCHITECTURAL, MECHANICAL, AND ELECTRICAL COMPONENTS SHALL BE DESIGNED AND INSTALLED TO RESIST THE CONTROLLING CONDITION OF OPERATIONAL FORCES, WIND FORCES OR SEISMIC FORCES IN ACCORDANCE WITH THE GOVERNING BUILDING CODE. SEISMIC FORCES SHALL BE AS PER ASCE 7. COMPONENTS SHALL BE BOLTED, WELDED, OR OTHERWISE POSITIVELY FASTENED WITHOUT CONSIDERATION OF FRICTIONAL RESISTANCE PRODUCED BY THE EFFECTS OF GRAVITY. A CONTINUOUS LOAD PATH OF SUFFICIENT STRENGTH AND STIFFNESS TO RESIST REQUIRED FORCES SHALL BE PROVIDED BETWEEN THE COMPONENT AND THE SUPPORTING STRUCTURE. ANCHORAGE SHALL BE DESIGNED TO RESIST LOADS IN BOTH ORTHOGONAL DIRECTIONS (TRANSVERSE AND LONGITUDINAL) AND SHALL BE DESIGNED AND SEALED BY THE CONTRACTOR'S ENGINEER CURRENTLY REGISTERED IN THE STATE OF NEW YORK.

A-2 COMPONENT REACTION FORCES AT THE POINT OF ATTACHMENT TO THE STRUCTURE SHALL BE SUBMITTED TO AND COORDINATED WITH THE ENGINEER FOR CONFIRMATION THAT SUPPORTING STRUCTURE IS ADEQUATE TO RESIST REQUIRED REACTION FORCES.

A-3 CONTRACTOR SHALL PROVIDE SPECIAL SEISMIC CERTIFICATION (SSC) FROM MANUFACTURER OF EQUIPMENT FOR ALL SYSTEMS DEEMED NECESSARY BY SPECIFICATIONS. SPECIAL SEISMIC CERTIFICATION SHALL BE IN COMPLIANCE WITH ASCE 7.

SPECIAL INSPECTIONS

SI-1 SPECIAL INSPECTIONS SHALL BE IN ACCORDANCE WITH SPECIFICATIONS AND THE BUILDING CODE OF NEW YORK STATE.

DELEGATED STRUCTURAL DESIGN ITEMS

DSD-1 THE FOLLOWING ITEMS SHALL BE SUBMITTED AS DELEGATED STRUCTURAL DESIGNS DURING CONSTRUCTION, IN ACCORDANCE WITH THE CONTRACT DRAWINGS AND SPECIFICATIONS. THIS LIST OF ITEMS IS NOT NECESSARILY COMPREHENSIVE.

A. EXCAVATION SUPPORT SYSTEMS
B. SOIL TIEDOWNS
C. PRECAST CONCRETE STRUCTURES
D. PRECAST CONCRETE PLANKS
E. PIPE SUPPORTS NOT SPECIFICALLY DESIGNED AND DETAILED ON THE CONTRACT DRAWINGS
F. EQUIPMENT ANCHORAGE

DSD-2 DRAWINGS AND CALCULATIONS FOR EACH ITEM SHALL BE SIGNED AND SEALED BY A PROFESSIONAL ENGINEER REGISTERED IN THE STATE OF NEW YORK.

Autodesk Docs://90388-000_Rye_Lake_Filtration/90388-000-WFP-S.rvt
2/20/2025 9:39:28 AM

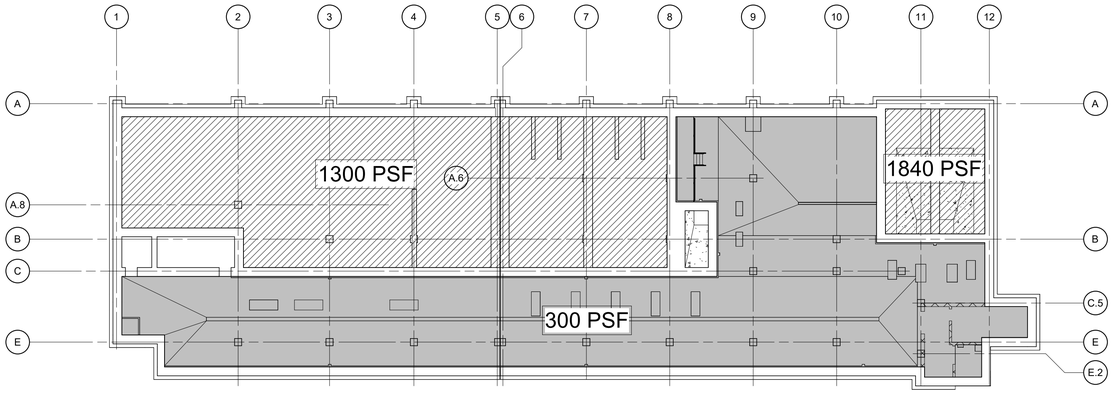

LIVE LOAD PLAN EL 383.00

3/64" = 1'-0"

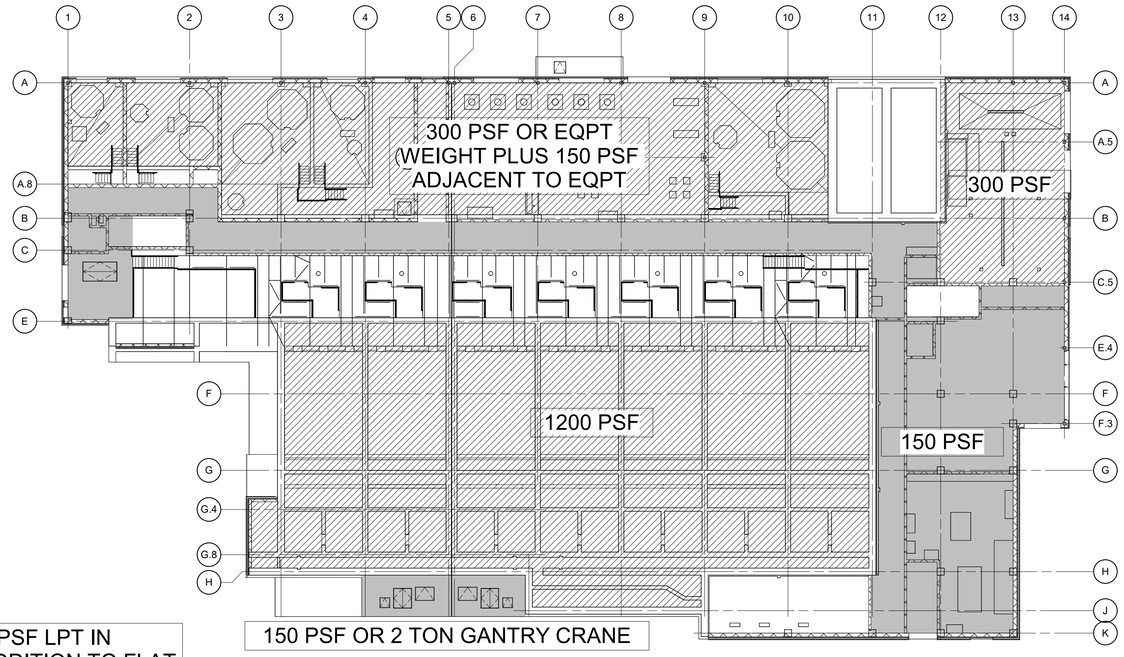

LIVE LOAD PLAN EL 407.00

3/64" = 1'-0"

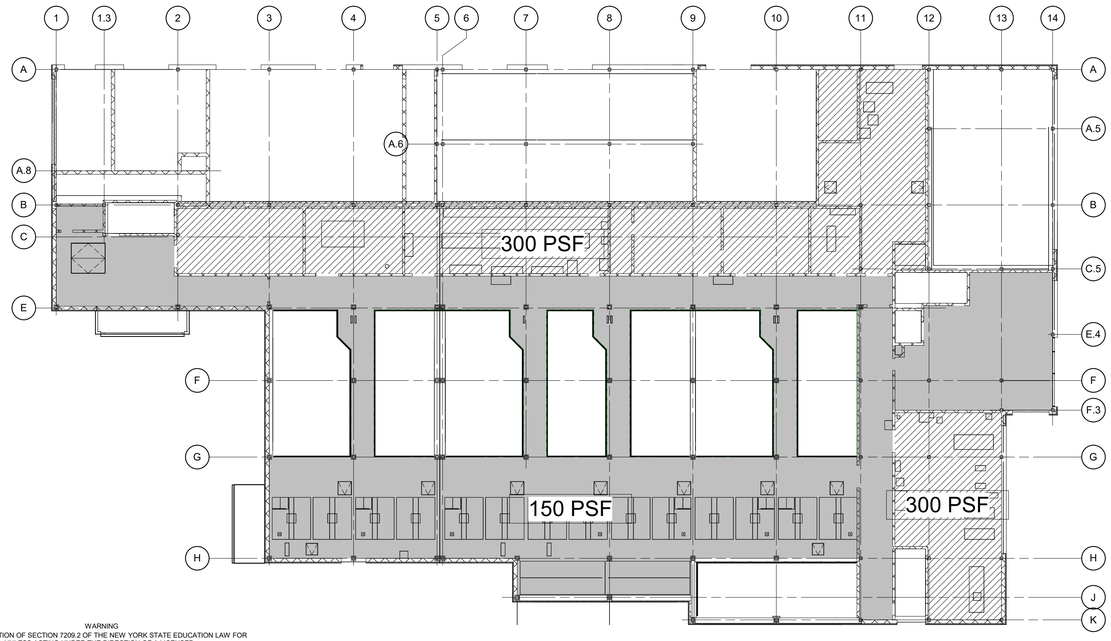

LIVE LOAD PLAN EL 421.00

3/64" = 1'-0"

0 PSF LPT IN ADDITION TO FLAT ROOF SNOW LOAD, TYP

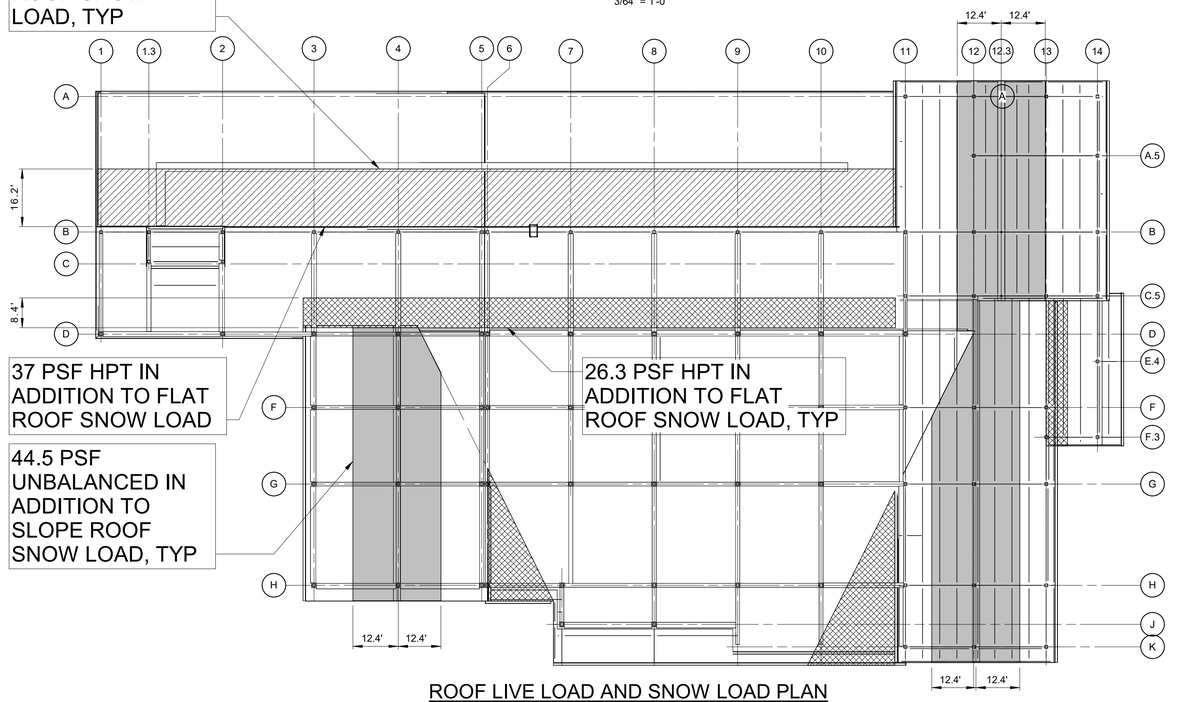

ROOF LIVE LOAD AND SNOW LOAD PLAN

3/64" = 1'-0"

WARNING
IT IS A VIOLATION OF SECTION 7209.2 OF THE NEW YORK STATE EDUCATION LAW FOR ANY PERSON, UNLESS ACTING UNDER THE DIRECTION OF A LICENSED PROFESSIONAL ENGINEER, TO ALTER IN ANY WAY PLANS, SPECIFICATIONS, PLATS OR REPORTS TO WHICH THE SEAL OF A PROFESSIONAL ENGINEER HAS BEEN APPLIED. IF AN ITEM BEARING THE SEAL OF A PROFESSIONAL ENGINEER IS ALTERED, THE ALTERING ENGINEER SHALL AFFIX TO THE ITEM HIS SEAL AND THE NOTATION "ALTERED BY" FOLLOWED BY HIS SIGNATURE, THE DATE, AND A SPECIFIC DESCRIPTION OF THE ALTERATION.

REV	ISSUED FOR	DATE	BY

PROJECT ENGINEER:	R. FROST
DESIGNED BY:	J. EDER
DRAWN BY:	M. ROBLE
CHECKED BY:	C. PHILLIPS

IF THIS BAR DOES NOT MEASURE 1" THEN DRAWING IS NOT TO FULL SCALE 0 1/2" 1"

BID SET

STATE OF NEW YORK · JC EDER · 097035 · LICENSED PROFESSIONAL ENGINEER

Hazen

HAZEN AND SAWYER
498 SEVENTH AVENUE, 11th FLOOR
NEW YORK, NEW YORK 10018

WESTCHESTER JOINT WATER WORKS
MAMARONECK, NY

RYE LAKE WATER FILTRATION PLANT
HARRISON, NY

STRUCTURAL
LOAD DIAGRAMS

DATE:	FEB 2025
HAZEN NO.:	90388-000
CONTRACT NO.:	A1364-A
DRAWING NUMBER:	S-002

Autodesk Docs://90388-000_Rye_Lake_Filtration/90388-000-WFP-S.rvt
2/20/2025 9:39:33 AM

NOTES:

1. SOIL TIEDOWNS SHALL BE DESIGNED FOR AN ALLOWABLE UPLIFT LOAD OF 158 KIPS, SEE DETAIL 1/S-300.
2. SOIL TIEDOWNS SHALL BE DESIGNED AND TESTED IN ACCORDANCE WITH SPECIFICATION 31 68 13.
3. CONTRACTOR SHALL BE RESPONSIBLE FOR DETERMINING SOIL TIEDOWNS STRESSING AND LOCKOFF METHOD PRIOR TO PLACEMENT OF THE BASE SLAB. DESIGN AND INSTALLATION SHALL BE THE EXCLUSIVE RESPONSIBILITY OF THE CONTRACTOR.
4. CONTRACTOR SHALL FIELD VERIFY LOCATION OF ALL SOIL TIEDOWNS AND NOTIFY ENGINEER OF INTERFERENCES. ENGINEER WILL PROVIDE REVISED SOIL TIEDOWN LOCATIONS IF NECESSARY.
5. CONTRACTOR SHALL FIELD VERIFY ELEVATIONS FOR TOP OF COMPETENT DECOMPOSED ROCK PRIOR TO INSTALLATION OF SOIL TIEDOWNS.
6. FOR SUPPORT OF EXCAVATION, SEE DRAWING S-126

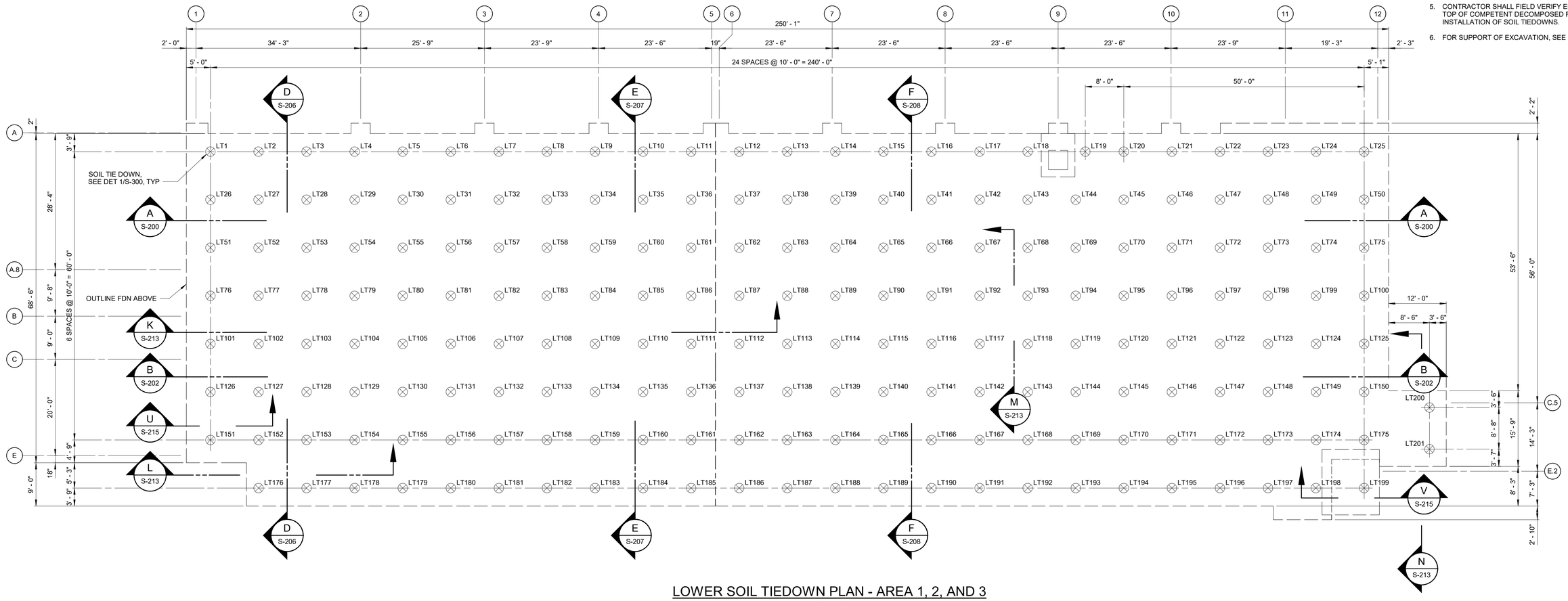

LOWER SOIL TIEDOWN PLAN - AREA 1, 2, AND 3

3/32" = 1'-0"

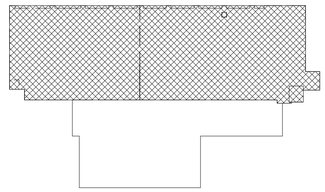

KEYPLAN

1/64" = 1'-0"

WARNING
IT IS A VIOLATION OF SECTION 7209.2 OF THE NEW YORK STATE EDUCATION LAW FOR ANY PERSON, UNLESS ACTING UNDER THE DIRECTION OF A LICENSED PROFESSIONAL ENGINEER, TO ALTER IN ANY WAY PLANS, SPECIFICATIONS, PLATS OR REPORTS TO WHICH THE SEAL OF A PROFESSIONAL ENGINEER HAS BEEN APPLIED. IF AN ITEM BEARING THE SEAL OF A PROFESSIONAL ENGINEER IS ALTERED, THE ALTERING ENGINEER SHALL AFFIX TO THE ITEM HIS SEAL AND THE NOTATION "ALTERED BY" FOLLOWED BY HIS SIGNATURE, THE DATE, AND A SPECIFIC DESCRIPTION OF THE ALTERATION.

REV	ISSUED FOR	DATE	BY

PROJECT ENGINEER:	R. FROST
DESIGNED BY:	J. EDER
DRAWN BY:	R. HERNANDEZ
CHECKED BY:	C. PHILLIPS

IF THIS BAR DOES NOT MEASURE 1" THEN DRAWING IS NOT TO FULL SCALE 0 1/2" 1"

BID SET

STATE OF NEW YORK · JC EDER · 097035 · LICENSED PROFESSIONAL ENGINEER

Hazen

HAZEN AND SAWYER
498 SEVENTH AVENUE, 11th FLOOR
NEW YORK, NEW YORK 10018

WESTCHESTER JOINT WATER WORKS
MAMARONECK, NY

RYE LAKE WATER FILTRATION PLANT
HARRISON, NY

FILTRATION PLANT
STRUCTURAL
SOIL TIEDOWN PLAN AREA 1, 2, AND 3

DATE:	FEB 2025
HAZEN NO.:	90388-000
CONTRACT NO.:	A1364-A
DRAWING NUMBER:	S-100

Autodesk Docs://90388-000_Rye_Lake_Filtration/90388-000-WFP-S.rvt
2/20/2025 10:58:49 AM

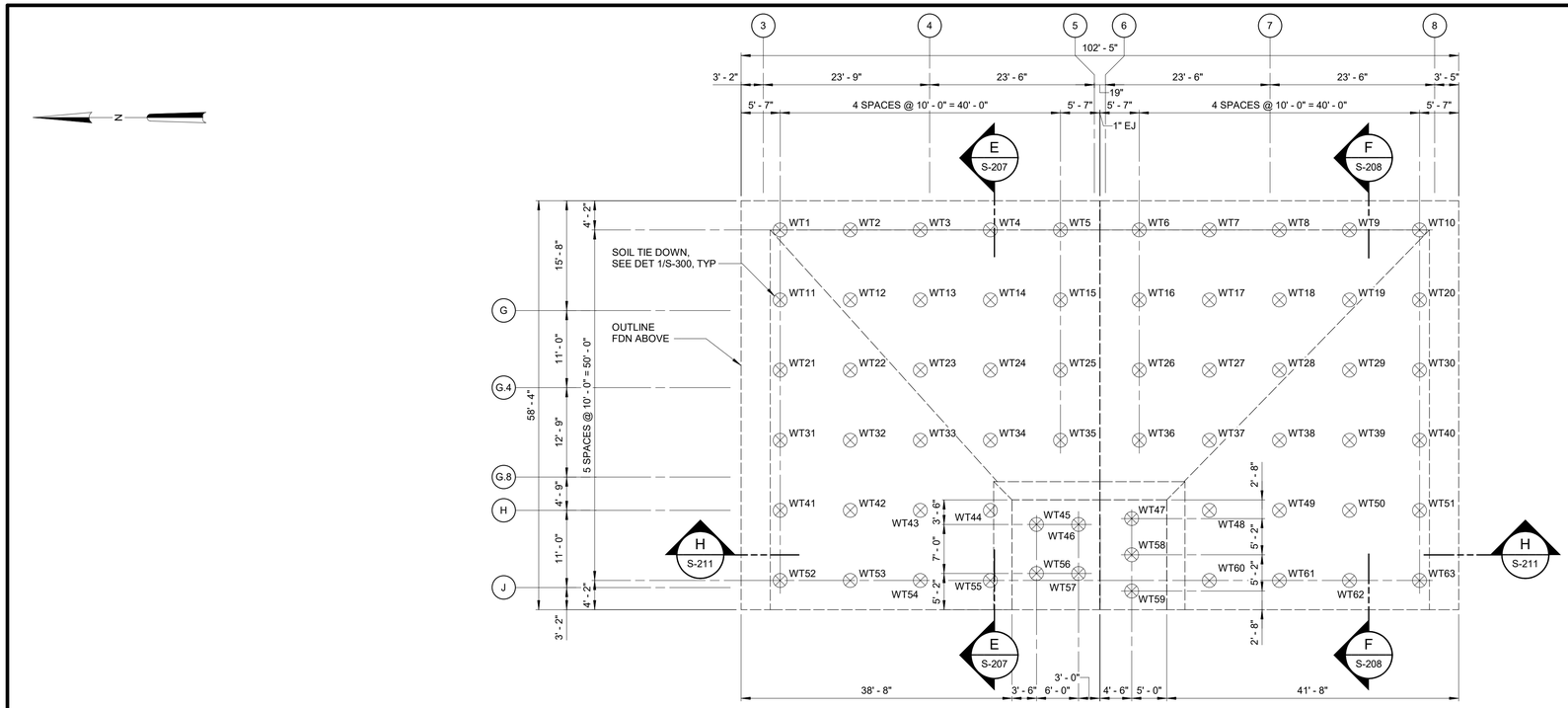

WASTE WASH WATER TANK SOIL TIEDOWN PLAN - AREA 4 AND 5

3/32" = 1'-0"

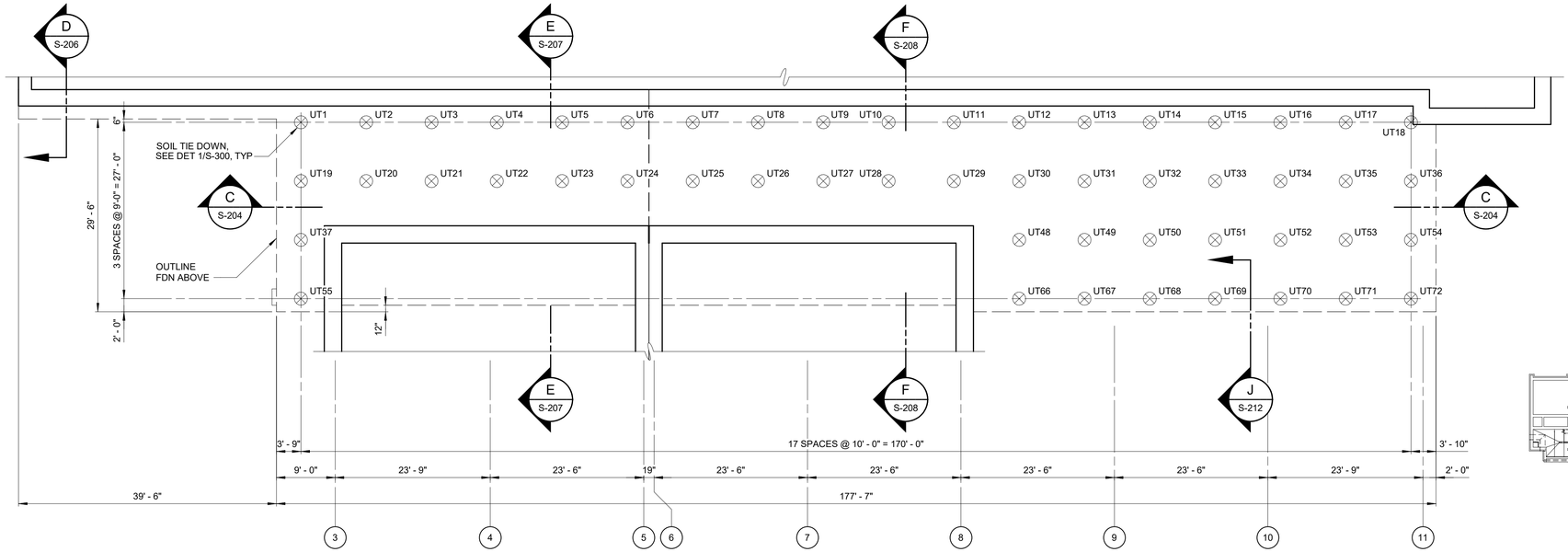

UPPER SOIL TIEDOWN PLAN - AREA 4 AND 5

3/32" = 1'-0"

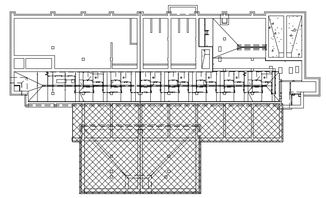

KEYPLAN

1/64" = 1'-0"

NOTES:

1. ALL STRUCTURAL STEEL THAT IS NOT ENCASED IN CONCRETE SHALL BE GALVANIZED.
2. SOIL TIEDOWNS SHALL BE DESIGNED FOR AN ALLOWABLE UPLIFT LOAD OF 158 KIPS, SEE DETAIL 1/S-300.
3. SOIL TIEDOWNS SHALL BE DESIGNED AND TESTED IN ACCORDANCE WITH SPECIFICATION 31 68 13.
4. CONTRACTOR SHALL BE RESPONSIBLE FOR DETERMINING SOIL TIEDOWNS STRESSING AND LOCKOFF METHOD PRIOR TO PLACEMENT OF THE BASE SLAB. DESIGN AND INSTALLATION SHALL BE THE EXCLUSIVE RESPONSIBILITY OF THE CONTRACTOR.
5. CONTRACTOR SHALL FIELD VERIFY LOCATION OF ALL SOIL TIEDOWNS AND NOTIFY ENGINEER OF INTERFERENCES. ENGINEER WILL PROVIDE REVISED SOIL TIEDOWN LOCATIONS IF NECESSARY.
6. CONTRACTOR SHALL FIELD VERIFY ELEVATIONS FOR TOP OF COMPETENT DECOMPOSED ROCK PRIOR TO INSTALLATION OF SOIL TIEDOWNS.
7. FOR SUPPORT OF EXCAVATION, SEE DRAWING S-126.

WARNING
IT IS A VIOLATION OF SECTION 7209.2 OF THE NEW YORK STATE EDUCATION LAW FOR ANY PERSON, UNLESS ACTING UNDER THE DIRECTION OF A LICENSED PROFESSIONAL ENGINEER, TO ALTER IN ANY WAY PLANS, SPECIFICATIONS, PLATS OR REPORTS TO WHICH THE SEAL OF A PROFESSIONAL ENGINEER HAS BEEN APPLIED. IF AN ITEM BEARING THE SEAL OF A PROFESSIONAL ENGINEER IS ALTERED, THE ALTERING ENGINEER SHALL AFFIX TO THE ITEM HIS SEAL AND THE NOTATION "ALTERED BY" FOLLOWED BY HIS SIGNATURE, THE DATE, AND A SPECIFIC DESCRIPTION OF THE ALTERATION.

REV	ISSUED FOR	DATE	BY

PROJECT ENGINEER:	R. FROST
DESIGNED BY:	J. EDER
DRAWN BY:	R. HERNANDEZ
CHECKED BY:	C. PHILLIPS
IF THIS BAR DOES NOT MEASURE 1" THEN DRAWING IS NOT TO FULL SCALE	0 1/2" 1"

BID SET

STATE OF NEW YORK · JC EDER · 097035 · LICENSED PROFESSIONAL ENGINEER

Hazen
HAZEN AND SAWYER
498 SEVENTH AVENUE, 11th FLOOR
NEW YORK, NEW YORK 10018

WESTCHESTER JOINT WATER WORKS
MAMARONECK, NY

RYE LAKE WATER FILTRATION PLANT
HARRISON, NY

FILTRATION PLANT
STRUCTURAL
SOIL TIEDOWN PLAN AREA 4 AND 5

DATE:	FEB 2025
HAZEN NO.:	90388-000
CONTRACT NO.:	A1364-A
DRAWING NUMBER:	S-101

Autodesk Docs://90388-000_Rye_Lake_Filtration/90388-000-WFP-S.rvt
2/20/2025 10:58:51 AM

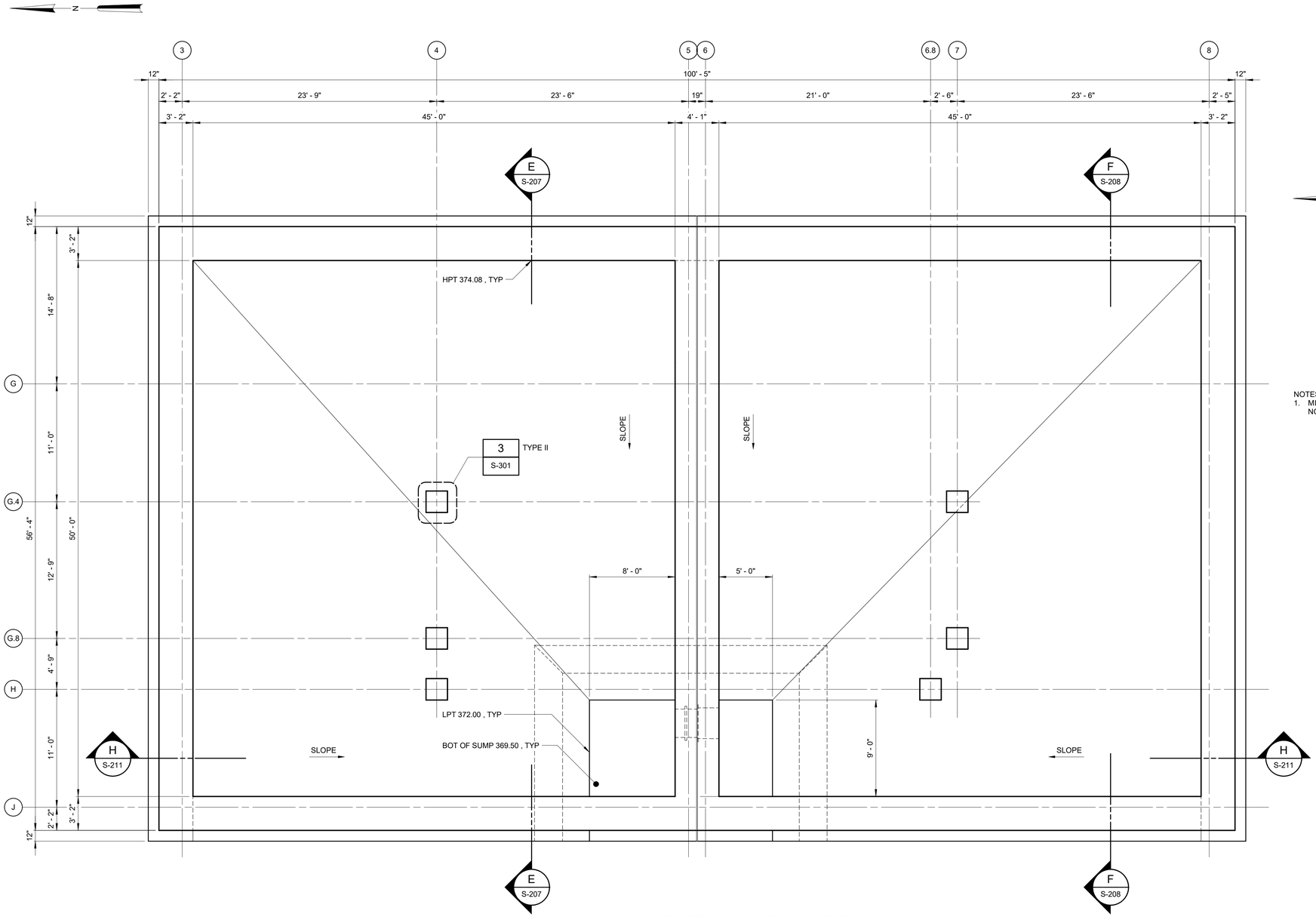

PLAN AT EL 374.08 - AREA 4 AND 5

3/16" = 1'-0"

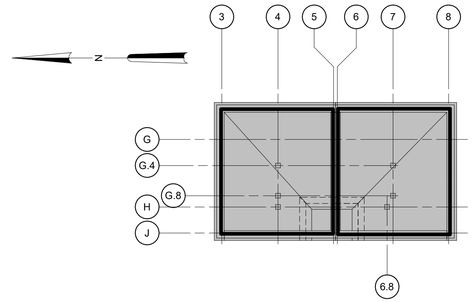

NOTES:
1. MINIMUM EXTENT OF CLASS A6 CONCRETE AS INDICATED. REFER TO NOTE C-2 ON DWG S-001.

LEGEND

- PROVIDE CLASS A6 CONCRETE FULL HEIGHT OF WALL
- PROVIDE CLASS A6 CONCRETE FOR SLAB AT EL 374.08

CLASS A6 CONCRETE LOCATION PLAN AT 374.08

1/32" = 1'-0"

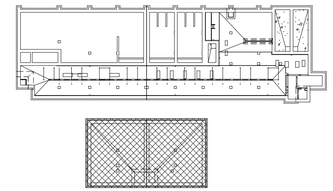

KEYPLAN

1/64" = 1'-0"

WARNING
IT IS A VIOLATION OF SECTION 7209.2 OF THE NEW YORK STATE EDUCATION LAW FOR ANY PERSON, UNLESS ACTING UNDER THE DIRECTION OF A LICENSED PROFESSIONAL ENGINEER, TO ALTER IN ANY WAY PLANS, SPECIFICATIONS, PLATS OR REPORTS TO WHICH THE SEAL OF A PROFESSIONAL ENGINEER HAS BEEN APPLIED. IF AN ITEM BEARING THE SEAL OF A PROFESSIONAL ENGINEER IS ALTERED, THE ALTERING ENGINEER SHALL AFFIX TO THE ITEM HIS SEAL AND THE NOTATION "ALTERED BY" FOLLOWED BY HIS SIGNATURE, THE DATE, AND A SPECIFIC DESCRIPTION OF THE ALTERATION.

REV	ISSUED FOR	DATE	BY

PROJECT ENGINEER:	R. FROST
DESIGNED BY:	J. EDER
DRAWN BY:	R. HERNANDEZ
CHECKED BY:	C. PHILLIPS

IF THIS BAR DOES NOT MEASURE 1" THEN DRAWING IS NOT TO FULL SCALE (0 1/2" 1")

BID SET

STATE OF NEW YORK · JC EDER · 097035 · LICENSED PROFESSIONAL ENGINEER

Hazen
HAZEN AND SAWYER
498 SEVENTH AVENUE, 11th FLOOR
NEW YORK, NEW YORK 10018

WESTCHESTER JOINT WATER WORKS
MAMARONECK, NY

RYE LAKE WATER FILTRATION PLANT
HARRISON, NY

FILTRATION PLANT
STRUCTURAL
PLAN AT EL 374.08 - AREA 4 AND 5

DATE:	FEB 2025
HAZEN NO.:	90388-000
CONTRACT NO.:	A1364-A
DRAWING NUMBER:	S-102

Autodesk Docs://90388-000_Rye_Lake_Filtration/90388-000-WFP-S.rvt
2/20/2025 10:58:52 AM

NOTES:

1. OVERALL FACILITY PLANS ARE SHOWN ON G-100 (EL 384.00), G-101 (EL 421.00), G-103 (ROOF).

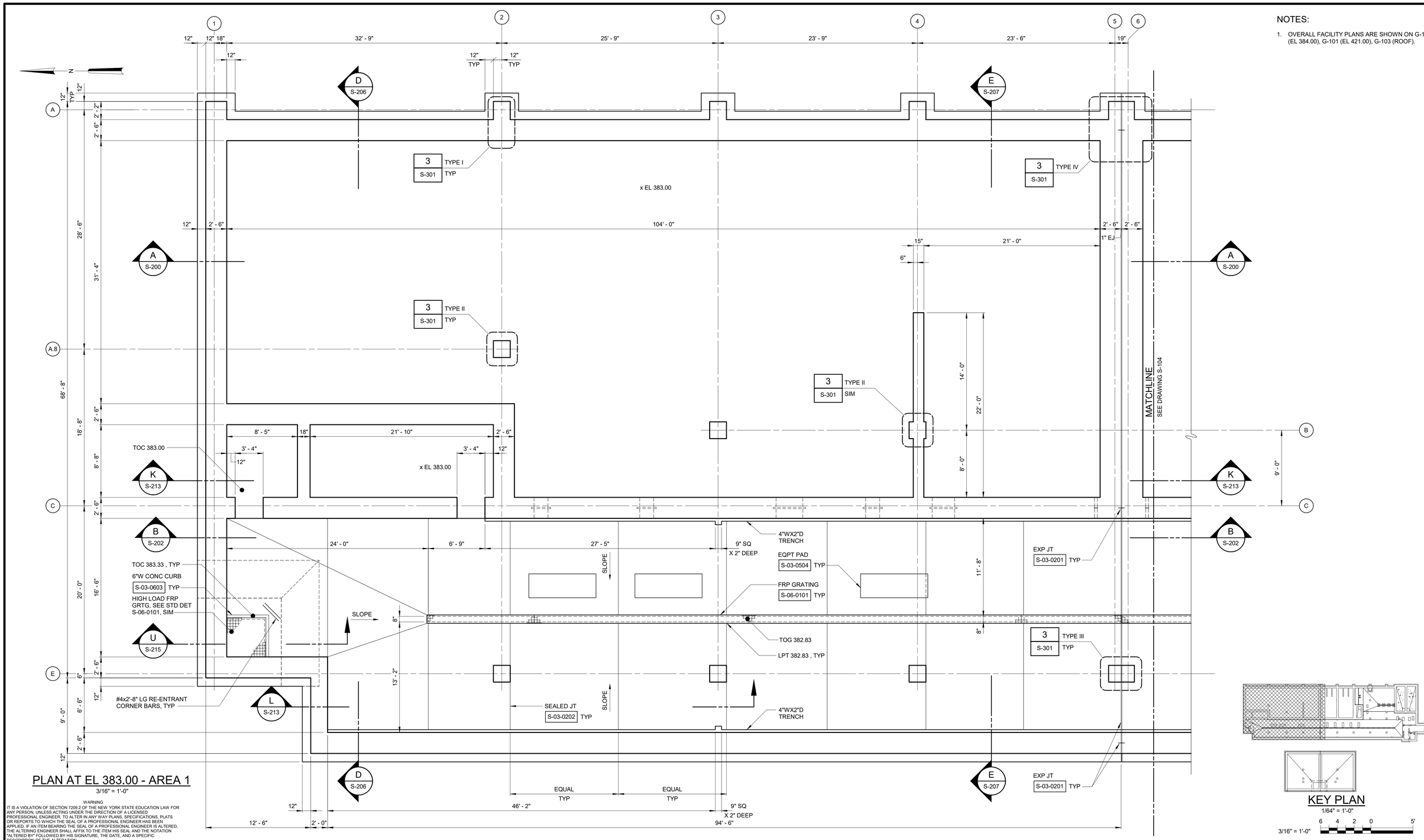

PLAN AT EL 383.00 - AREA 1

3/16" = 1'-0"

KEY PLAN

1/64" = 1'-0"

3/16" = 1'-0" 6 4 2 0 5'

WARNING
IT IS A VIOLATION OF SECTION 7209.2 OF THE NEW YORK STATE EDUCATION LAW FOR ANY PERSON, UNLESS ACTING UNDER THE DIRECTION OF A LICENSED PROFESSIONAL ENGINEER, TO ALTER IN ANY WAY PLANS, SPECIFICATIONS, PLATS OR REPORTS TO WHICH THE SEAL OF A PROFESSIONAL ENGINEER HAS BEEN APPLIED. IF AN ITEM BEARING THE SEAL OF A PROFESSIONAL ENGINEER IS ALTERED, THE ALTERING ENGINEER SHALL AFFIX TO THE ITEM HIS SEAL AND THE NOTATION "ALTERED BY" FOLLOWED BY HIS SIGNATURE, THE DATE, AND A SPECIFIC DESCRIPTION OF THE ALTERATION.

REV	ISSUED FOR	DATE	BY

PROJECT ENGINEER:	R. FROST
DESIGNED BY:	J. EDER
DRAWN BY:	R. HERNANDEZ
CHECKED BY:	C. PHILLIPS

IF THIS BAR DOES NOT MEASURE 1" THEN DRAWING IS NOT TO FULL SCALE 0 1/2" 1"

BID SET

STATE OF NEW YORK · JC EDER · 097035 · LICENSED PROFESSIONAL ENGINEER

Hazen

HAZEN AND SAWYER
498 SEVENTH AVENUE, 11th FLOOR
NEW YORK, NEW YORK 10018

WESTCHESTER JOINT WATER WORKS
MAMARONECK, NY

RYE LAKE WATER FILTRATION PLANT
HARRISON, NY

FILTRATION PLANT
STRUCTURAL
PLAN AT EL 383.00 - AREA 1

DATE:	FEB 2025
HAZEN NO.:	90388-000
CONTRACT NO.:	A1364-A
DRAWING NUMBER:	S-103

Autodesk Docs://90388-000_Rye_Lake_Filtration/90388-000-WFP-S.rvt
2/20/2025 10:58:53 AM

NOTES:

1. OVERALL FACILITY PLANS ARE SHOWN ON G-100 (EL 384.00), G-101 (EL 421.00), G-103 (ROOF).
2. COORDINATE LOCATION AND DIMENSIONS OF TRENCH DRAIN WITH PLUMBING DRAWINGS.

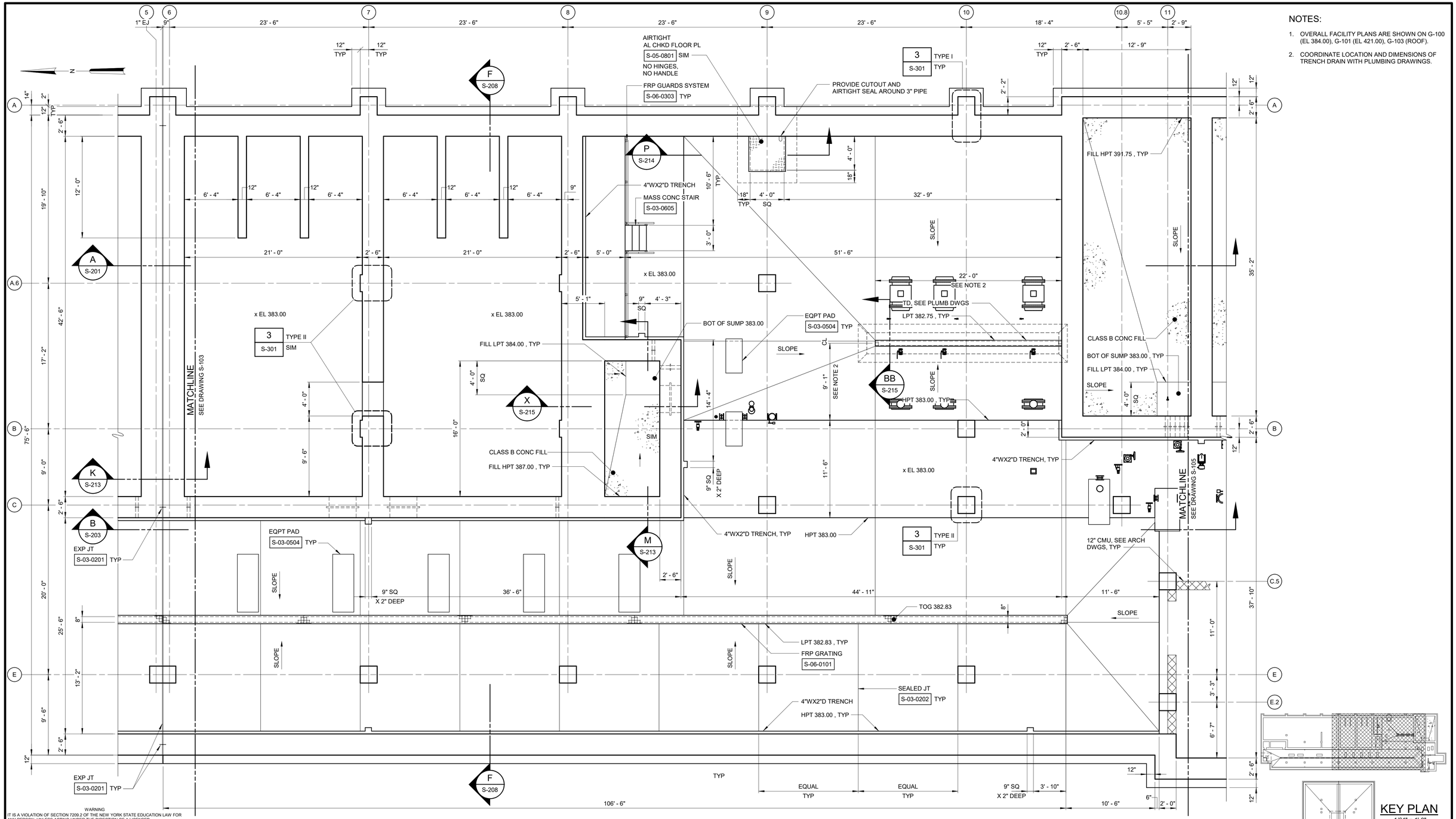

PLAN AT EL 383.00 - AREA 2

3/16" = 1'-0"

KEY PLAN

1/64" = 1'-0"

3/16" = 1'-0"

WARNING
IT IS A VIOLATION OF SECTION 7209.2 OF THE NEW YORK STATE EDUCATION LAW FOR ANY PERSON, UNLESS ACTING UNDER THE DIRECTION OF A LICENSED PROFESSIONAL ENGINEER, TO ALTER IN ANY WAY PLANS, SPECIFICATIONS, PLATS OR REPORTS TO WHICH THE SEAL OF A PROFESSIONAL ENGINEER HAS BEEN APPLIED. IF AN ITEM BEARING THE SEAL OF A PROFESSIONAL ENGINEER IS ALTERED, THE ALTERING ENGINEER SHALL AFFIX TO THE ITEM HIS SEAL AND THE NOTATION "ALTERED BY" FOLLOWED BY HIS SIGNATURE, THE DATE, AND A SPECIFIC DESCRIPTION OF THE ALTERATION.

REV	ISSUED FOR	DATE	BY

PROJECT ENGINEER:	R. FROST
DESIGNED BY:	J. EDER
DRAWN BY:	R. HERNANDEZ
CHECKED BY:	C. PHILLIPS

IF THIS BAR DOES NOT MEASURE 1" THEN DRAWING IS NOT TO FULL SCALE (0, 1/2", 1")

BID SET

STATE OF NEW YORK · JC EDER · 097035 · LICENSED PROFESSIONAL ENGINEER

Hazen

HAZEN AND SAWYER
498 SEVENTH AVENUE, 11th FLOOR
NEW YORK, NEW YORK 10018

WESTCHESTER JOINT WATER WORKS
MAMARONECK, NY

RYE LAKE WATER FILTRATION PLANT
HARRISON, NY

FILTRATION PLANT
STRUCTURAL
PLAN AT EL 383.00 - AREA 2

DATE:	FEB 2025
HAZEN NO.:	90388-000
CONTRACT NO.:	A1364-A
DRAWING NUMBER:	S-104

Autodesk Docs://90388-000_Rye_Lake_Filtration/90388-000-WFP-S.rvt
2/20/2025 10:58:55 AM

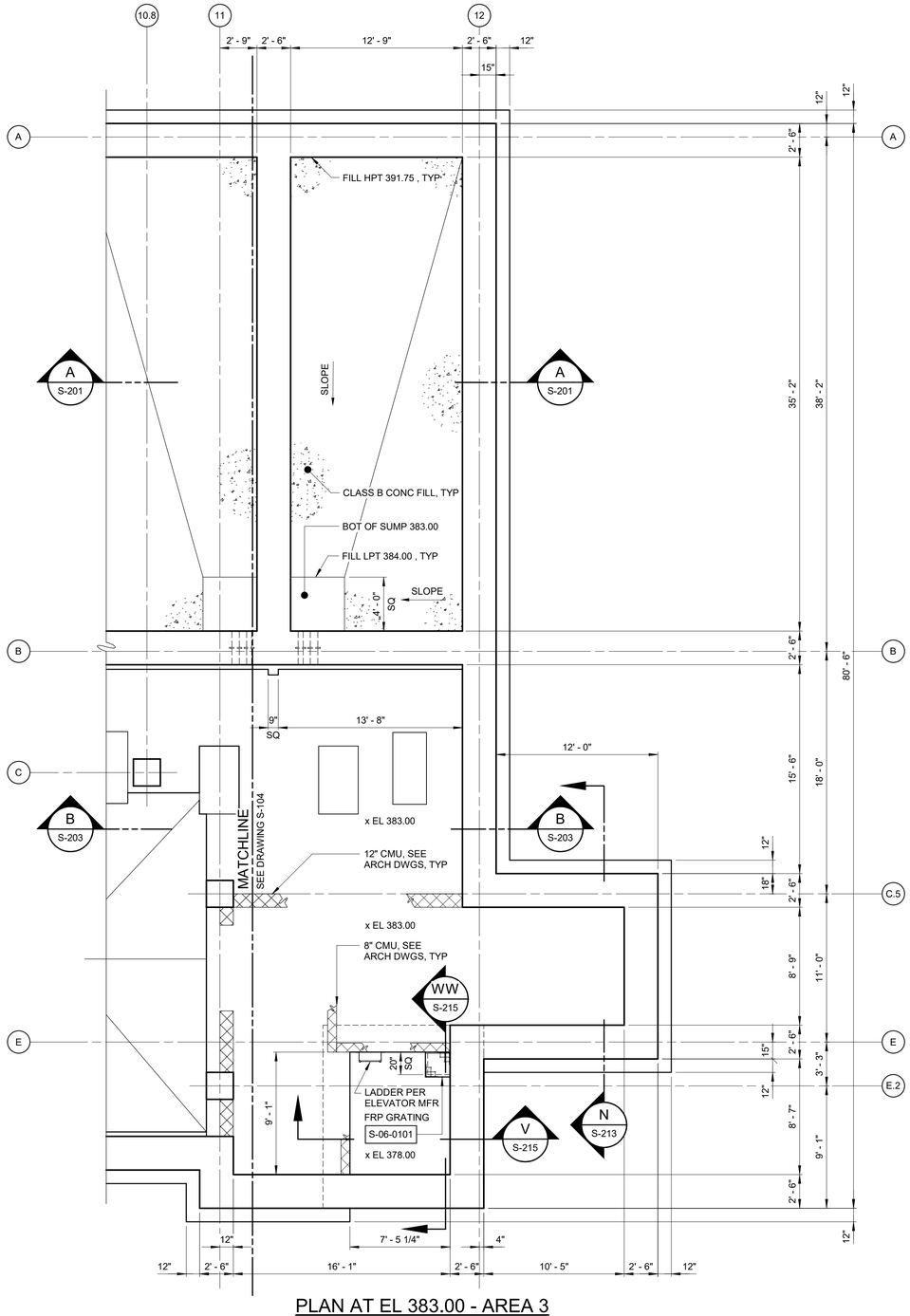

PLAN AT EL 383.00 - AREA 3

3/16" = 1'-0"

NOTES:

1. OVERALL FACILITY PLANS ARE SHOWN ON G-100 (EL 384.00), G-101 (EL 421.00), G-103 (ROOF).

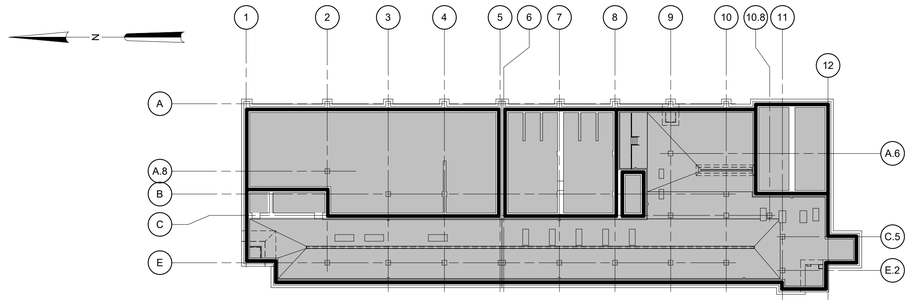

NOTES:
1. MINIMUM EXTENT OF CLASS A6 CONCRETE AS INDICATED. REFER TO NOTE C-2 ON DWG S-001.

LEGEND

- PROVIDE CLASS A6 CONCRETE FULL HEIGHT OF WALL
- PROVIDE CLASS A6 CONCRETE FOR SLAB AT EL 383.00

CLASS A6 CONCRETE LOCATION PLAN AT EL 383.00

1/32" = 1'-0"

NOTES:
1. MINIMUM EXTENT OF CLASS A6 CONCRETE AS INDICATED. REFER TO NOTE C-2 ON DWG S-001.

LEGEND

- PROVIDE CLASS A6 CONCRETE FULL HEIGHT OF WALL
- PROVIDE CLASS A6 CONCRETE FOR SLAB AT EL 398.00

CLASS A6 CONCRETE LOCATION PLAN AT EL 398.00

1/32" = 1'-0"

KEY PLAN

1/64" = 1'-0"

1/32" = 1'-0" 32 16 0 32'

3/16" = 1'-0" 6 4 2 0 5'

WARNING
IT IS A VIOLATION OF SECTION 7209.2 OF THE NEW YORK STATE EDUCATION LAW FOR ANY PERSON, UNLESS ACTING UNDER THE DIRECTION OF A LICENSED PROFESSIONAL ENGINEER, TO ALTER IN ANY WAY PLANS, SPECIFICATIONS, PLATS OR REPORTS TO WHICH THE SEAL OF A PROFESSIONAL ENGINEER HAS BEEN APPLIED. IF AN ITEM BEARING THE SEAL OF A PROFESSIONAL ENGINEER IS ALTERED, THE ALTERING ENGINEER SHALL AFFIX TO THE ITEM HIS SEAL AND THE NOTATION "ALTERED BY" FOLLOWED BY HIS SIGNATURE, THE DATE, AND A SPECIFIC DESCRIPTION OF THE ALTERATION.

REV	ISSUED FOR	DATE	BY

PROJECT ENGINEER:	R. FROST
DESIGNED BY:	J. EDER
DRAWN BY:	R. HERNANDEZ
CHECKED BY:	C. PHILLIPS

IF THIS BAR DOES NOT MEASURE 1" THEN DRAWING IS NOT TO FULL SCALE 0 1/2" 1"

BID SET

STATE OF NEW YORK · JC EDER · 097035 · LICENSED PROFESSIONAL ENGINEER

Hazen

HAZEN AND SAWYER
498 SEVENTH AVENUE, 11th FLOOR
NEW YORK, NEW YORK 10018

WESTCHESTER JOINT WATER WORKS
MAMARONECK, NY

RYE LAKE WATER FILTRATION PLANT
HARRISON, NY

FILTRATION PLANT
STRUCTURAL
PLAN AT EL 383.00 - AREA 3

DATE:	FEB 2025
HAZEN NO.:	90388-000
CONTRACT NO.:	A1364-A
DRAWING NUMBER:	S-105

Autodesk Docs://90388-000_Rye_Lake_Filtration/90388-000-WFP-S.rvt
2/20/2025 10:58:59 AM

NOTES:

1. OVERALL FACILITY PLANS ARE SHOWN ON G-100 (EL 384.00), G-101 (EL 421.00), G-103 (ROOF).
2. L3 DENOTES L3X3X1/4 GALVANIZED
   W10 DENOTES W10X22 GALVANIZED
   W12 DENOTES W12X72 GALVANIZED
   W12** DENOTES W12X40 GALVANIZED
3. ALL STRUCTURAL STEEL SHALL BE GALVANIZED.
4. LIVE LOAD 100 PSF.
5. * DENOTES EXTENTS OF 21" HIGH FRP GUARDS, CONTRACTOR SHALL COORDINATE EXTENTS NECESSARY TO AVOID RAILING INTERFERENCE WITH MECHANICAL PIPING AND FITTINGS.
6. (-X") INDICATES THE DISTANCE FROM THE TOP OF GRATING TO THE TOP OF STEEL.

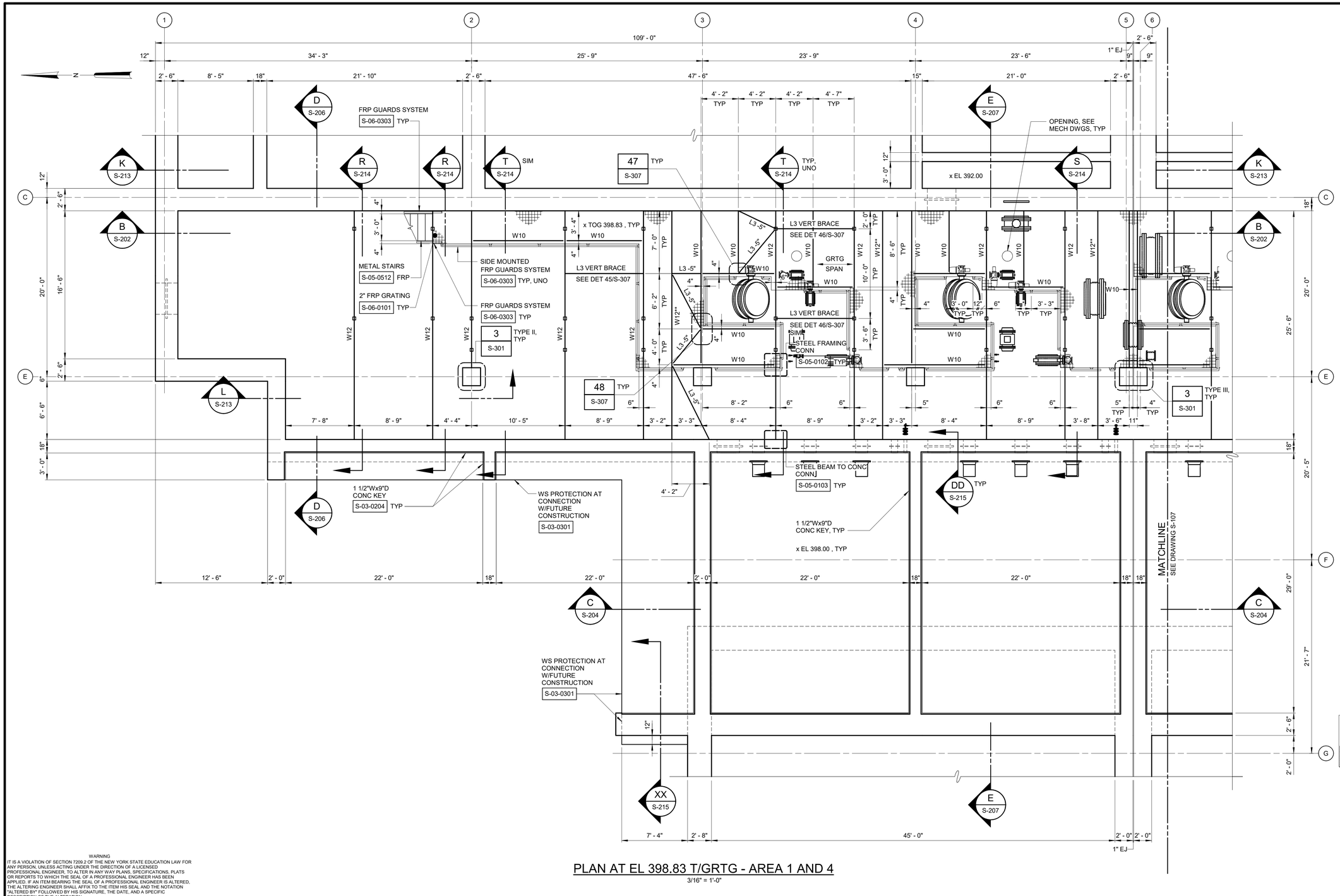

PLAN AT EL 398.83 T/GRTG - AREA 1 AND 4

3/16" = 1'-0"

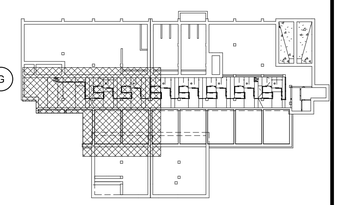

KEY PLAN

1/64" = 1'-0"

3/16" = 1'-0"

WARNING
IT IS A VIOLATION OF SECTION 7209.2 OF THE NEW YORK STATE EDUCATION LAW FOR ANY PERSON, UNLESS ACTING UNDER THE DIRECTION OF A LICENSED PROFESSIONAL ENGINEER, TO ALTER IN ANY WAY PLANS, SPECIFICATIONS, PLATS OR REPORTS TO WHICH THE SEAL OF A PROFESSIONAL ENGINEER HAS BEEN APPLIED. IF AN ITEM BEARING THE SEAL OF A PROFESSIONAL ENGINEER IS ALTERED, THE ALTERING ENGINEER SHALL AFFIX TO THE ITEM HIS SEAL AND THE NOTATION "ALTERED BY" FOLLOWED BY HIS SIGNATURE, THE DATE, AND A SPECIFIC DESCRIPTION OF THE ALTERATION.

REV	ISSUED FOR	DATE	BY

PROJECT ENGINEER:	R. FROST
DESIGNED BY:	J. EDER
DRAWN BY:	R. HERNANDEZ
CHECKED BY:	C. PHILLIPS

IF THIS BAR DOES NOT MEASURE 1" THEN DRAWING IS NOT TO FULL SCALE (0, 1/2", 1")

BID SET

STATE OF NEW YORK · JC EDER · 097035 · LICENSED PROFESSIONAL ENGINEER

Hazen
HAZEN AND SAWYER
498 SEVENTH AVENUE, 11th FLOOR
NEW YORK, NEW YORK 10018

WESTCHESTER JOINT WATER WORKS
MAMARONECK, NY

RYE LAKE WATER FILTRATION PLANT
HARRISON, NY

FILTRATION PLANT
STRUCTURAL
PLAN AT EL 398.83 - AREA 1 AND 4

DATE:	FEB 2025
HAZEN NO.:	90388-000
CONTRACT NO.:	A1364-A
DRAWING NUMBER:	S-106

Autodesk Docs://90388-000_Rye_Lake_Filtration/90388-000-WFP-S.rvt
2/20/2025 10:59:00 AM

NOTES:

1. OVERALL FACILITY PLANS ARE SHOWN ON G-100 (EL 384.00), G-101 (EL 421.00), G-103 (ROOF).
2. L3 DENOTES L3X3X1/4 GALVANIZED
   W10 DENOTES W10X22 GALVANIZED
   W12 DENOTES W12X72 GALVANIZED
   W12** DENOTES W12X40 GALVANIZED
3. ALL STRUCTURAL STEEL SHALL BE GALVANIZED.
4. LIVE LOAD 100 PSF.
5. * DENOTES EXTENTS OF 21" HIGH FRP GUARDS, CONTRACTOR SHALL COORDINATE EXTENTS NECESSARY TO AVOID RAILING INTERFERENCE WITH MECHANICAL PIPING AND FITTINGS.
6. (-X") INDICATES THE DISTANCE FROM THE TOP OF GRATING TO THE TOP OF STEEL.

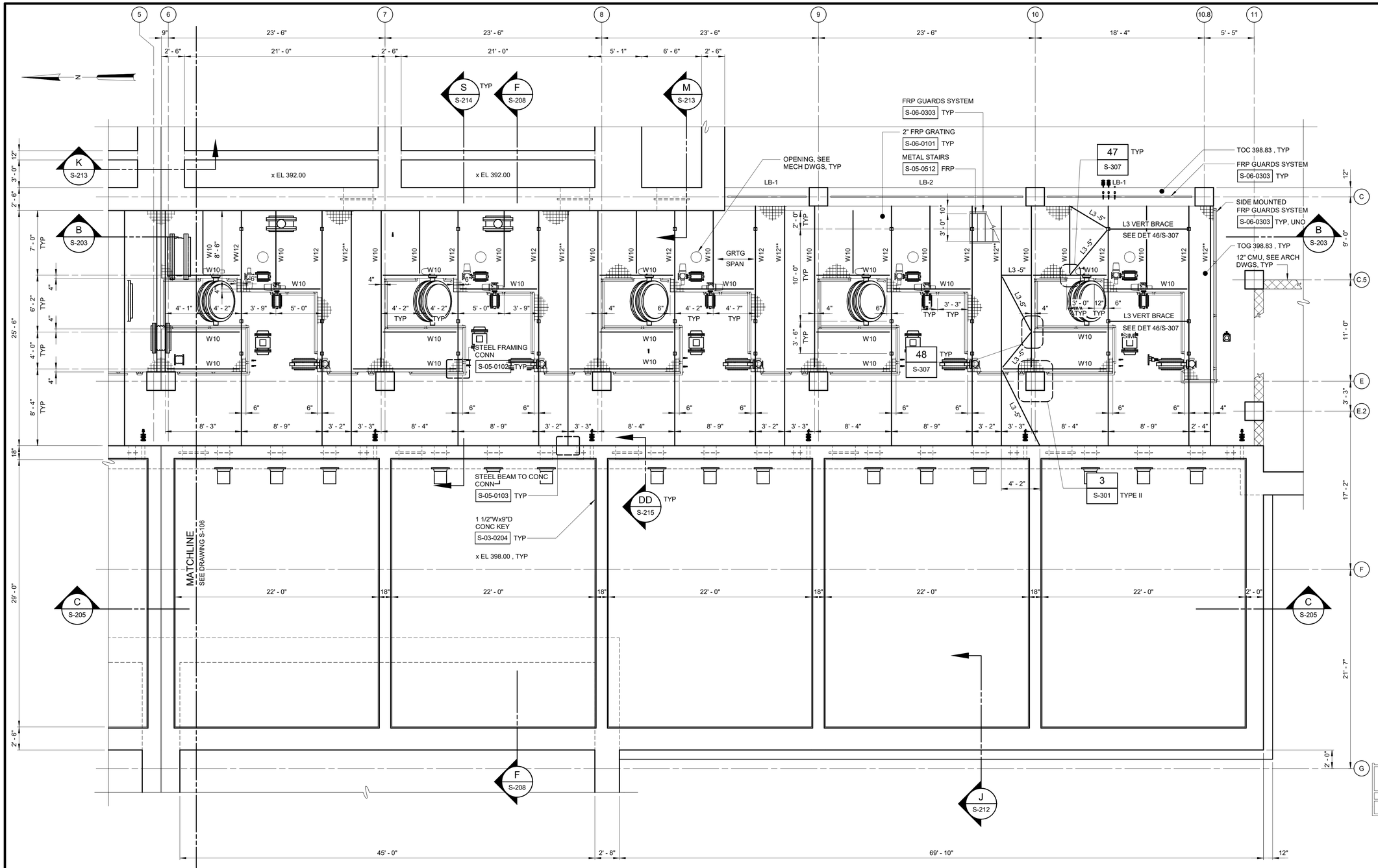

PLAN AT EL 398.83 T/GTRG - AREA 2 AND 5

3/16" = 1'-0"

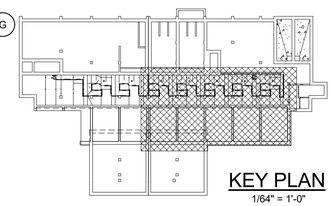

KEY PLAN

1/64" = 1'-0"

3/16" = 1'-0"

WARNING
IT IS A VIOLATION OF SECTION 7209.2 OF THE NEW YORK STATE EDUCATION LAW FOR ANY PERSON, UNLESS ACTING UNDER THE DIRECTION OF A LICENSED PROFESSIONAL ENGINEER, TO ALTER IN ANY WAY PLANS, SPECIFICATIONS, PLATS OR REPORTS TO WHICH THE SEAL OF A PROFESSIONAL ENGINEER HAS BEEN APPLIED. IF AN ITEM BEARING THE SEAL OF A PROFESSIONAL ENGINEER IS ALTERED, THE ALTERING ENGINEER SHALL AFFIX TO THE ITEM HIS SEAL AND THE NOTATION "ALTERED BY" FOLLOWED BY HIS SIGNATURE, THE DATE, AND A SPECIFIC DESCRIPTION OF THE ALTERATION.

REV	ISSUED FOR	DATE	BY

PROJECT ENGINEER:	R. FROST
DESIGNED BY:	J. EDER
DRAWN BY:	R. HERNANDEZ
CHECKED BY:	C. PHILLIPS
IF THIS BAR DOES NOT MEASURE 1" THEN DRAWING IS NOT TO FULL SCALE	0 1/2" 1"

BID SET

STATE OF NEW YORK · JC. EDER · 097035 · LICENSED PROFESSIONAL ENGINEER

Hazen

HAZEN AND SAWYER
498 SEVENTH AVENUE, 11th FLOOR
NEW YORK, NEW YORK 10018

WESTCHESTER JOINT WATER WORKS
MAMARONECK, NY

RYE LAKE WATER FILTRATION PLANT
HARRISON, NY

FILTRATION PLANT
STRUCTURAL
PLAN AT EL 398.83 - AREA 2 AND 5

DATE:	FEB 2025
HAZEN NO.:	90388-000
CONTRACT NO.:	A1364-A
DRAWING NUMBER:	S-107

Autodesk Docs://90388-000_Rye_Lake_Filtration/90388-000-WFP-S.rvt
2/20/2025 10:59:02 AM

NOTES:

1. OVERALL FACILITY PLANS ARE SHOWN ON G-100 (EL 384.00), G-101 (EL 421.00), G-103 (ROOF)
2. FOR FLOOR SLOPES, SEE FLOOR SLOPE PLAN AT EL 407.00 - AREA 1/S-110.
3. INDICATES LOCATION OF VERTICAL BRACE, SEE FRAMING ELEVATIONS.

PLAN AT EL 407.00 - AREA 1
3/16" = 1'-0"

KEY PLAN
1/64" = 1'-0"
3/16" = 1'-0"

WARNING
IT IS A VIOLATION OF SECTION 7209.2 OF THE NEW YORK STATE EDUCATION LAW FOR ANY PERSON, UNLESS ACTING UNDER THE DIRECTION OF A LICENSED PROFESSIONAL ENGINEER, TO ALTER IN ANY WAY PLANS, SPECIFICATIONS, PLATS OR REPORTS TO WHICH THE SEAL OF A PROFESSIONAL ENGINEER HAS BEEN APPLIED. IF AN ITEM BEARING THE SEAL OF A PROFESSIONAL ENGINEER IS ALTERED, THE ALTERING ENGINEER SHALL AFFIX TO THE ITEM HIS SEAL AND THE NOTATION "ALTERED BY" FOLLOWED BY HIS SIGNATURE, THE DATE, AND A SPECIFIC DESCRIPTION OF THE ALTERATION.

REV	ISSUED FOR	DATE	BY

PROJECT ENGINEER:	R. FROST
DESIGNED BY:	J. EDER
DRAWN BY:	R. HERNANDEZ
CHECKED BY:	C. PHILLIPS

IF THIS BAR DOES NOT MEASURE 1" THEN DRAWING IS NOT TO FULL SCALE (0, 1/2", 1")

BID SET

STATE OF NEW YORK · JC EDER · 097035 · LICENSED PROFESSIONAL ENGINEER

Hazen
HAZEN AND SAWYER
498 SEVENTH AVENUE, 11th FLOOR
NEW YORK, NEW YORK 10018

WESTCHESTER JOINT WATER WORKS
MAMARONECK, NY

RYE LAKE WATER FILTRATION PLANT
HARRISON, NY

FILTRATION PLANT
STRUCTURAL
PLAN AT EL 407.00 - AREA 1

DATE:	FEB 2025
HAZEN NO.:	90388-000
CONTRACT NO.:	A1364-A
DRAWING NUMBER:	S-108

Autodesk Docs://90388-000_Rye_Lake_Filtration/90388-000-WFP-S.rvt
2/20/2025 10:59:06 AM

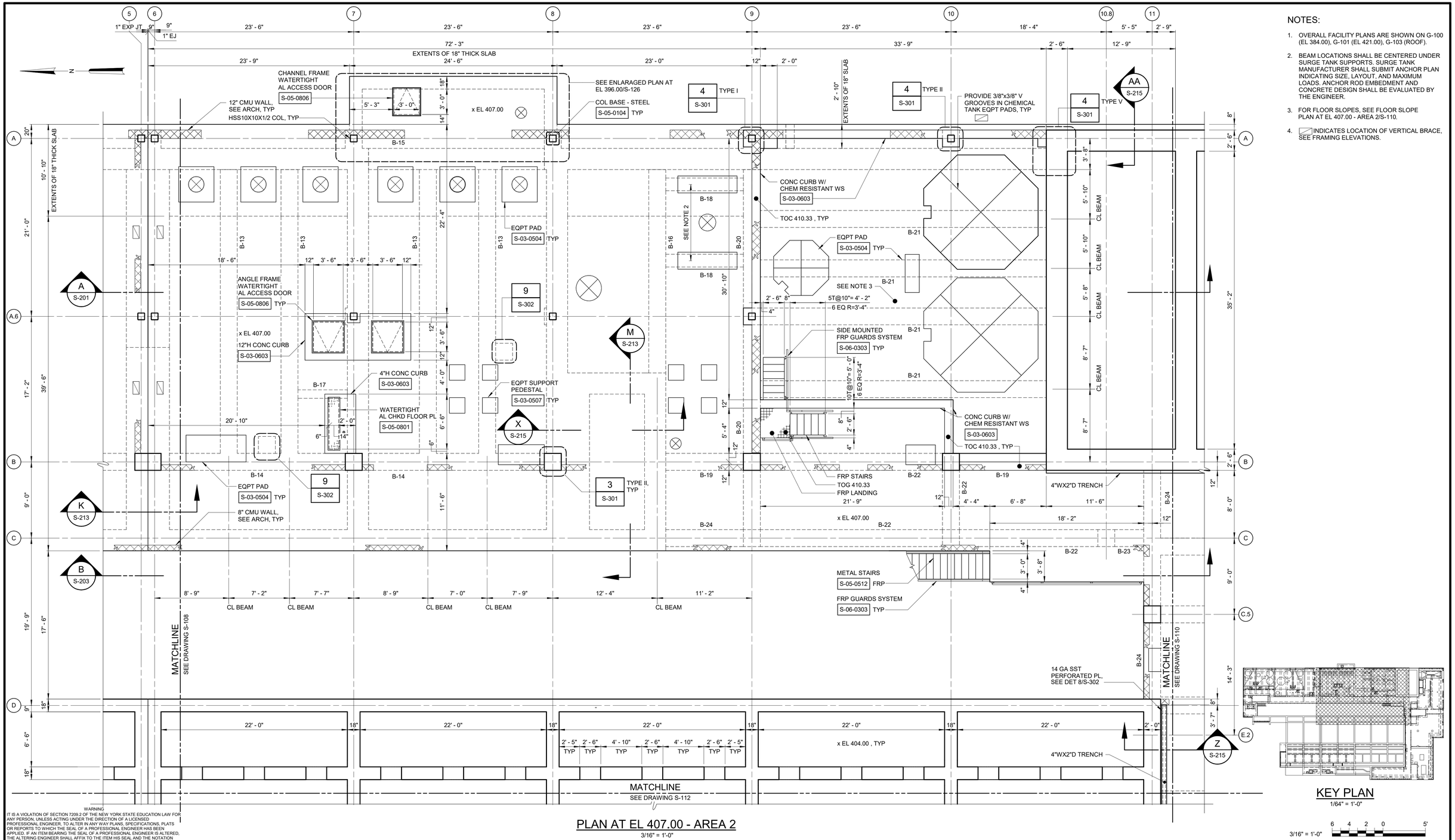

PLAN AT EL 407.00 - AREA 2

3/16" = 1'-0"

KEY PLAN

1/64" = 1'-0"

3/16" = 1'-0"

NOTES:

1. OVERALL FACILITY PLANS ARE SHOWN ON G-100 (EL 384.00), G-101 (EL 421.00), G-103 (ROOF).
2. BEAM LOCATIONS SHALL BE CENTERED UNDER SURGE TANK SUPPORTS. SURGE TANK MANUFACTURER SHALL SUBMIT ANCHOR PLAN INDICATING SIZE, LAYOUT, AND MAXIMUM LOADS. ANCHOR ROD EMBEDMENT AND CONCRETE DESIGN SHALL BE EVALUATED BY THE ENGINEER.
3. FOR FLOOR SLOPES, SEE FLOOR SLOPE PLAN AT EL 407.00 - AREA 2/S-110.
4. INDICATES LOCATION OF VERTICAL BRACE, SEE FRAMING ELEVATIONS.

WARNING
IT IS A VIOLATION OF SECTION 7209.2 OF THE NEW YORK STATE EDUCATION LAW FOR ANY PERSON, UNLESS ACTING UNDER THE DIRECTION OF A LICENSED PROFESSIONAL ENGINEER, TO ALTER IN ANY WAY PLANS, SPECIFICATIONS, PLATS OR REPORTS TO WHICH THE SEAL OF A PROFESSIONAL ENGINEER HAS BEEN APPLIED. IF AN ITEM BEARING THE SEAL OF A PROFESSIONAL ENGINEER IS ALTERED, THE ALTERING ENGINEER SHALL AFFIX TO THE ITEM HIS SEAL AND THE NOTATION "ALTERED BY" FOLLOWED BY HIS SIGNATURE, THE DATE, AND A SPECIFIC DESCRIPTION OF THE ALTERATION.

REV	ISSUED FOR	DATE	BY

PROJECT ENGINEER:	R. FROST
DESIGNED BY:	J. EDER
DRAWN BY:	R. HERNANDEZ
CHECKED BY:	C. PHILLIPS

IF THIS BAR DOES NOT MEASURE 1" THEN DRAWING IS NOT TO FULL SCALE 0 1/2" 1"

BID SET

STATE OF NEW YORK · JC EDER · 097035 · LICENSED PROFESSIONAL ENGINEER

Hazen

HAZEN AND SAWYER
498 SEVENTH AVENUE, 11th FLOOR
NEW YORK, NEW YORK 10018

WESTCHESTER JOINT WATER WORKS
MAMARONECK, NY

RYE LAKE WATER FILTRATION PLANT
HARRISON, NY

FILTRATION PLANT
STRUCTURAL
PLAN AT EL 407.00 - AREA 2

DATE:	FEB 2025
HAZEN NO.:	90388-000
CONTRACT NO.:	A1364-A
DRAWING NUMBER:	S-109

Autodesk Docs://90388-000_Rye_Lake_Filtration/90388-000-WFP-S.rvt
2/20/2025 10:59:09 AM

NOTES:

1. OVERALL FACILITY PLANS ARE SHOWN ON G-100 (EL 384.00), G-101 (EL 421.00), G-103 (ROOF).
2. * DENOTES DIMENSIONS SHALL BE VERIFIED WITH EQUIPMENT MANUFACTURER.
3. COORDINATE LOCATION AND DIMENSIONS OF TRENCH DRAIN WITH PLUMBING DRAWINGS.
4. ▨ INDICATES LOCATION OF VERTICAL BRACE, SEE FRAMING ELEVATIONS.

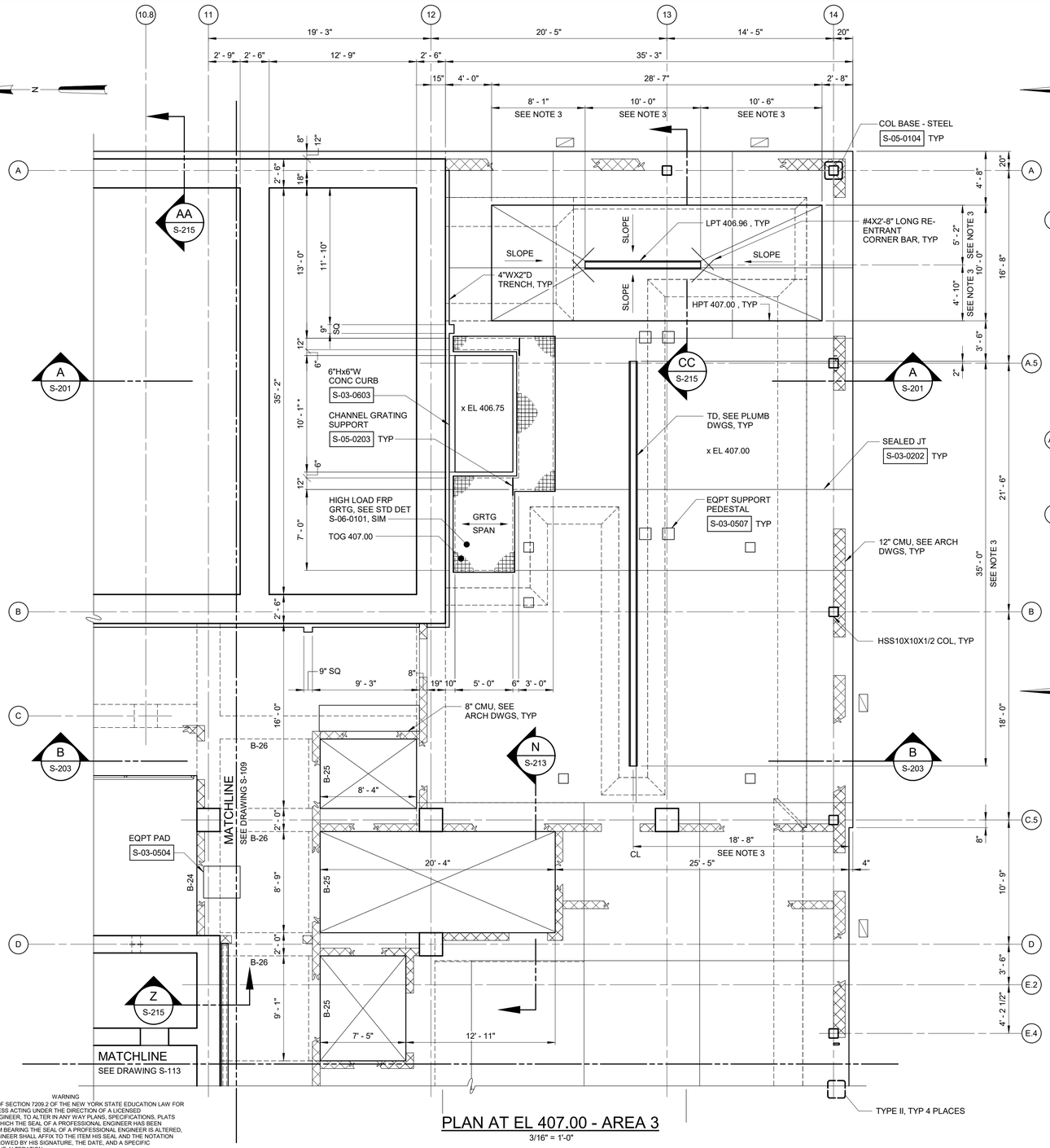

PLAN AT EL 407.00 - AREA 3

3/16" = 1'-0"

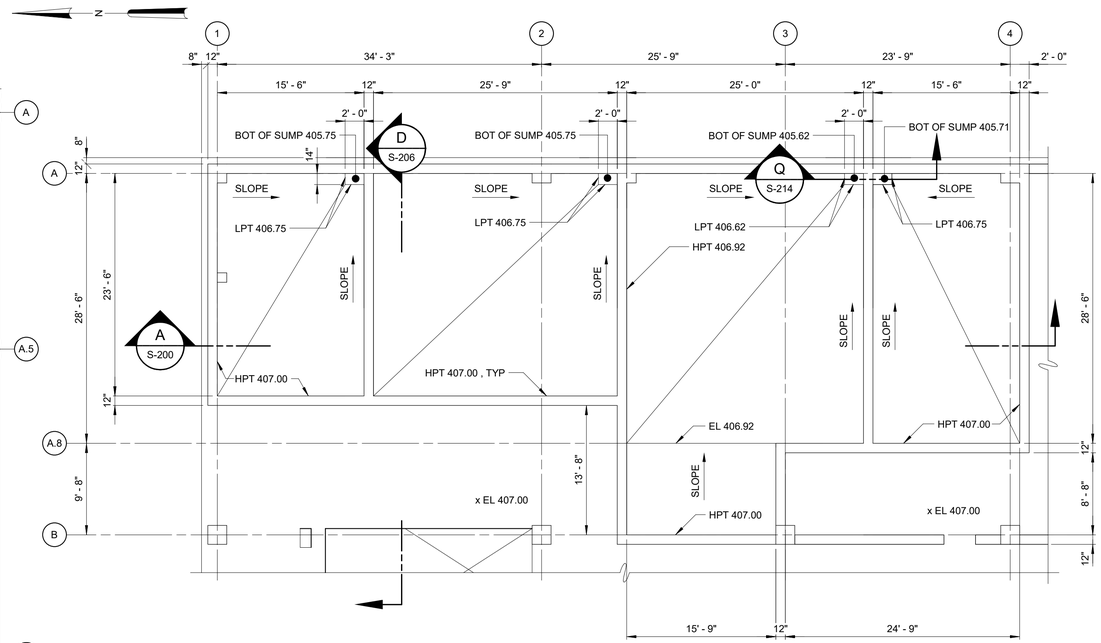

FLOOR SLOPE PLAN AT EL 407.00 - AREA 1

1/8" = 1'-0"

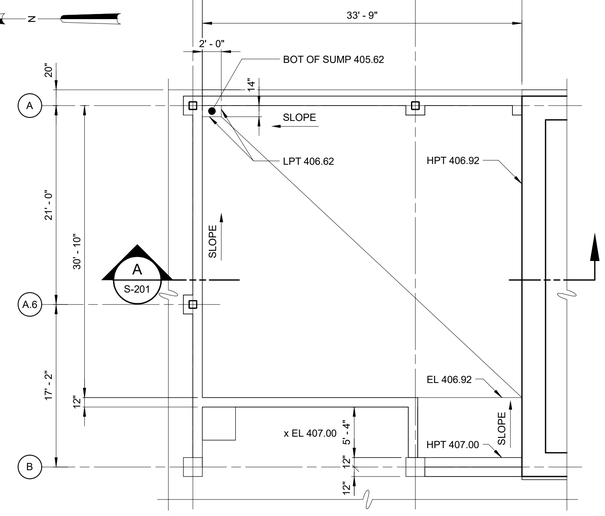

FLOOR SLOPE PLAN AT EL 407.00 - AREA 2

1/8" = 1'-0"

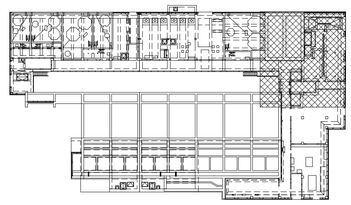

KEY PLAN

1/64" = 1'-0"

1/8" = 1'-0" 8 6 4 2 0 8'

3/16" = 1'-0" 6 4 2 0 5'

WARNING
IT IS A VIOLATION OF SECTION 7209.2 OF THE NEW YORK STATE EDUCATION LAW FOR ANY PERSON, UNLESS ACTING UNDER THE DIRECTION OF A LICENSED PROFESSIONAL ENGINEER, TO ALTER IN ANY WAY PLANS, SPECIFICATIONS, PLATS OR REPORTS TO WHICH THE SEAL OF A PROFESSIONAL ENGINEER HAS BEEN APPLIED. IF AN ITEM BEARING THE SEAL OF A PROFESSIONAL ENGINEER IS ALTERED, THE ALTERING ENGINEER SHALL AFFIX TO THE ITEM HIS SEAL AND THE NOTATION "ALTERED BY" FOLLOWED BY HIS SIGNATURE, THE DATE, AND A SPECIFIC DESCRIPTION OF THE ALTERATION.

REV	ISSUED FOR	DATE	BY

PROJECT ENGINEER:	R. FROST
DESIGNED BY:	J. EDER
DRAWN BY:	R. HERNANDEZ
CHECKED BY:	C. PHILLIPS

IF THIS BAR DOES NOT MEASURE 1" THEN DRAWING IS NOT TO FULL SCALE 0 1/2" 1"

BID SET

STATE OF NEW YORK · JC EDER · 097035 · LICENSED PROFESSIONAL ENGINEER

Hazen

HAZEN AND SAWYER
498 SEVENTH AVENUE, 11th FLOOR
NEW YORK, NEW YORK 10018

WESTCHESTER JOINT WATER WORKS
MAMARONECK, NY

RYE LAKE WATER FILTRATION PLANT
HARRISON, NY

FILTRATION PLANT
STRUCTURAL
PLAN AT EL 407.00 - AREA 3 AND FLOOR SLOPE PLAN AT EL 407.00 - AREA 1 AND 2

DATE:	FEB 2025
HAZEN NO.:	90388-000
CONTRACT NO.:	A1364-A
DRAWING NUMBER:	S-110

Autodesk Docs://90388-000_Rye_Lake_Filtration/90388-000-WFP-S.rvt
2/20/2025 10:59:13 AM

N

NOTES:

1. OVERALL FACILITY PLANS ARE SHOWN ON G-100 (EL 384.00), G-101 (EL 421.00), G-103 (ROOF).

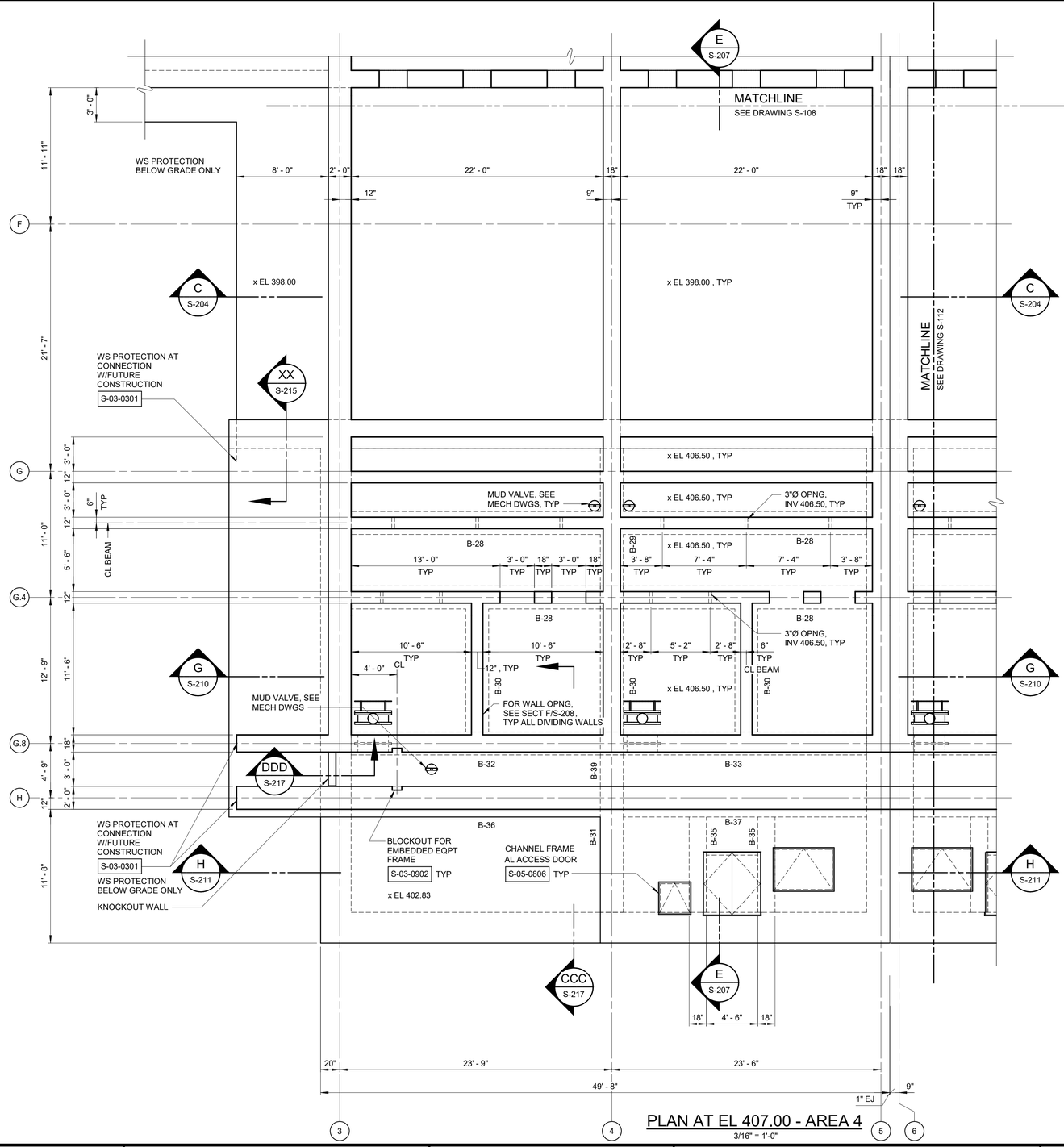

PLAN AT EL 407.00 - AREA 4

3/16" = 1'-0"

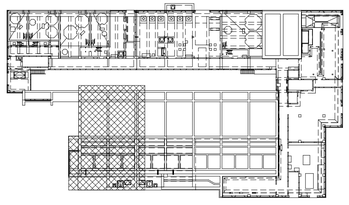

KEY PLAN

1/64" = 1'-0"

3/16" = 1'-0" 6 4 2 0 5'

WARNING
IT IS A VIOLATION OF SECTION 7209.2 OF THE NEW YORK STATE EDUCATION LAW FOR ANY PERSON, UNLESS ACTING UNDER THE DIRECTION OF A LICENSED PROFESSIONAL ENGINEER, TO ALTER IN ANY WAY PLANS, SPECIFICATIONS, PLATS OR REPORTS TO WHICH THE SEAL OF A PROFESSIONAL ENGINEER HAS BEEN APPLIED. IF AN ITEM BEARING THE SEAL OF A PROFESSIONAL ENGINEER IS ALTERED, THE ALTERING ENGINEER SHALL AFFIX TO THE ITEM HIS SEAL AND THE NOTATION "ALTERED BY" FOLLOWED BY HIS SIGNATURE, THE DATE, AND A SPECIFIC DESCRIPTION OF THE ALTERATION.

REV	ISSUED FOR	DATE	BY

PROJECT ENGINEER:	R. FROST
DESIGNED BY:	J. EDER
DRAWN BY:	R. HERNANDEZ
CHECKED BY:	C. PHILLIPS

IF THIS BAR DOES NOT MEASURE 1" THEN DRAWING IS NOT TO FULL SCALE 0 1/2" 1"

BID SET

STATE OF NEW YORK · JC EDER · 097035 · LICENSED PROFESSIONAL ENGINEER

Hazen

HAZEN AND SAWYER
498 SEVENTH AVENUE, 11th FLOOR
NEW YORK, NEW YORK 10018

WESTCHESTER JOINT WATER WORKS
MAMARONECK, NY

RYE LAKE WATER FILTRATION PLANT
HARRISON, NY

FILTRATION PLANT
STRUCTURAL
PLAN AT EL 407.00 - AREA 4

DATE:	FEB 2025
HAZEN NO.:	90388-000
CONTRACT NO.:	A1364-A
DRAWING NUMBER:	S-111

Autodesk Docs://90388-000_Rye_Lake_Filtration/90388-000-WFP-S.rvt
2/20/2025 10:59:15 AM

NOTES:

1. OVERALL FACILITY PLANS ARE SHOWN ON G-100 (EL 384.00), G-101 (EL 421.00), G-103 (ROOF).

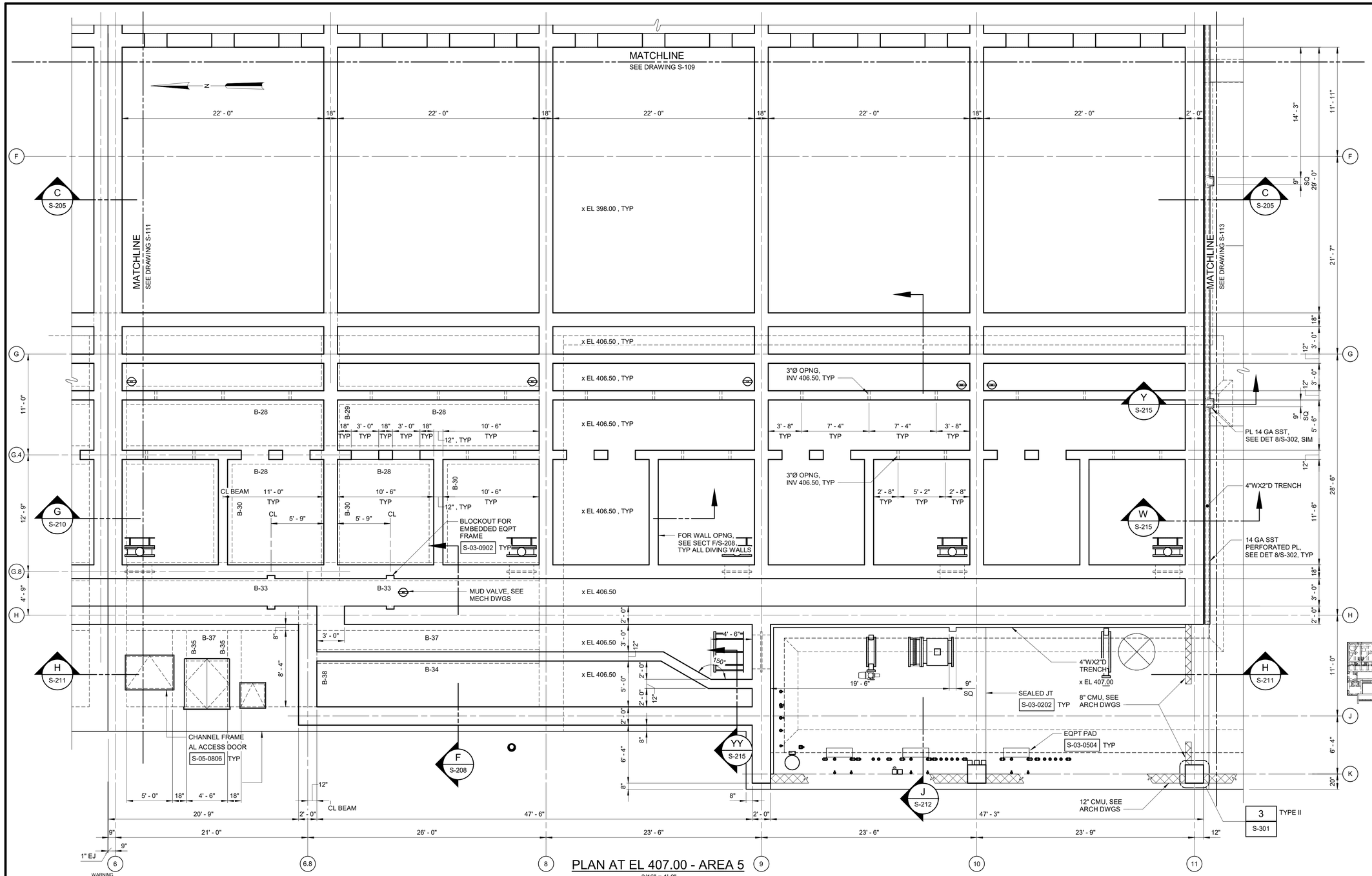

PLAN AT EL 407.00 - AREA 5

3/16" = 1'-0"

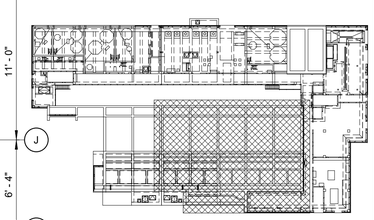

KEY PLAN

1/64" = 1'-0"

3/16" = 1'-0"

WARNING

IT IS A VIOLATION OF SECTION 7209.2 OF THE NEW YORK STATE EDUCATION LAW FOR ANY PERSON, UNLESS ACTING UNDER THE DIRECTION OF A LICENSED PROFESSIONAL ENGINEER, TO ALTER IN ANY WAY PLANS, SPECIFICATIONS, PLATS OR REPORTS TO WHICH THE SEAL OF A PROFESSIONAL ENGINEER HAS BEEN APPLIED. IF AN ITEM BEARING THE SEAL OF A PROFESSIONAL ENGINEER IS ALTERED, THE ALTERING ENGINEER SHALL AFFIX TO THE ITEM HIS SEAL AND THE NOTATION "ALTERED BY" FOLLOWED BY HIS SIGNATURE, THE DATE, AND A SPECIFIC DESCRIPTION OF THE ALTERATION.

REV	ISSUED FOR	DATE	BY

PROJECT ENGINEER:	R. FROST
DESIGNED BY:	J. EDER
DRAWN BY:	R. HERNANDEZ
CHECKED BY:	C. PHILLIPS
IF THIS BAR DOES NOT MEASURE 1" THEN DRAWING IS NOT TO FULL SCALE	0 1/2" 1"

BID SET

STATE OF NEW YORK JC EDER 097035 LICENSED PROFESSIONAL ENGINEER

Hazen

HAZEN AND SAWYER
498 SEVENTH AVENUE, 11th FLOOR
NEW YORK, NEW YORK 10018

WESTCHESTER JOINT WATER WORKS
MAMARONECK, NY

RYE LAKE WATER FILTRATION PLANT
HARRISON, NY

FILTRATION PLANT
STRUCTURAL
PLAN AT EL 407.00 - AREA 5

DATE:	FEB 2025
HAZEN NO.:	90388-000
CONTRACT NO.:	A1364-A
DRAWING NUMBER:	S-112

Autodesk Docs://90388-000_Rye_Lake_Filtration/90388-000-WFP-S.rvt
2/20/2025 10:59:19 AM

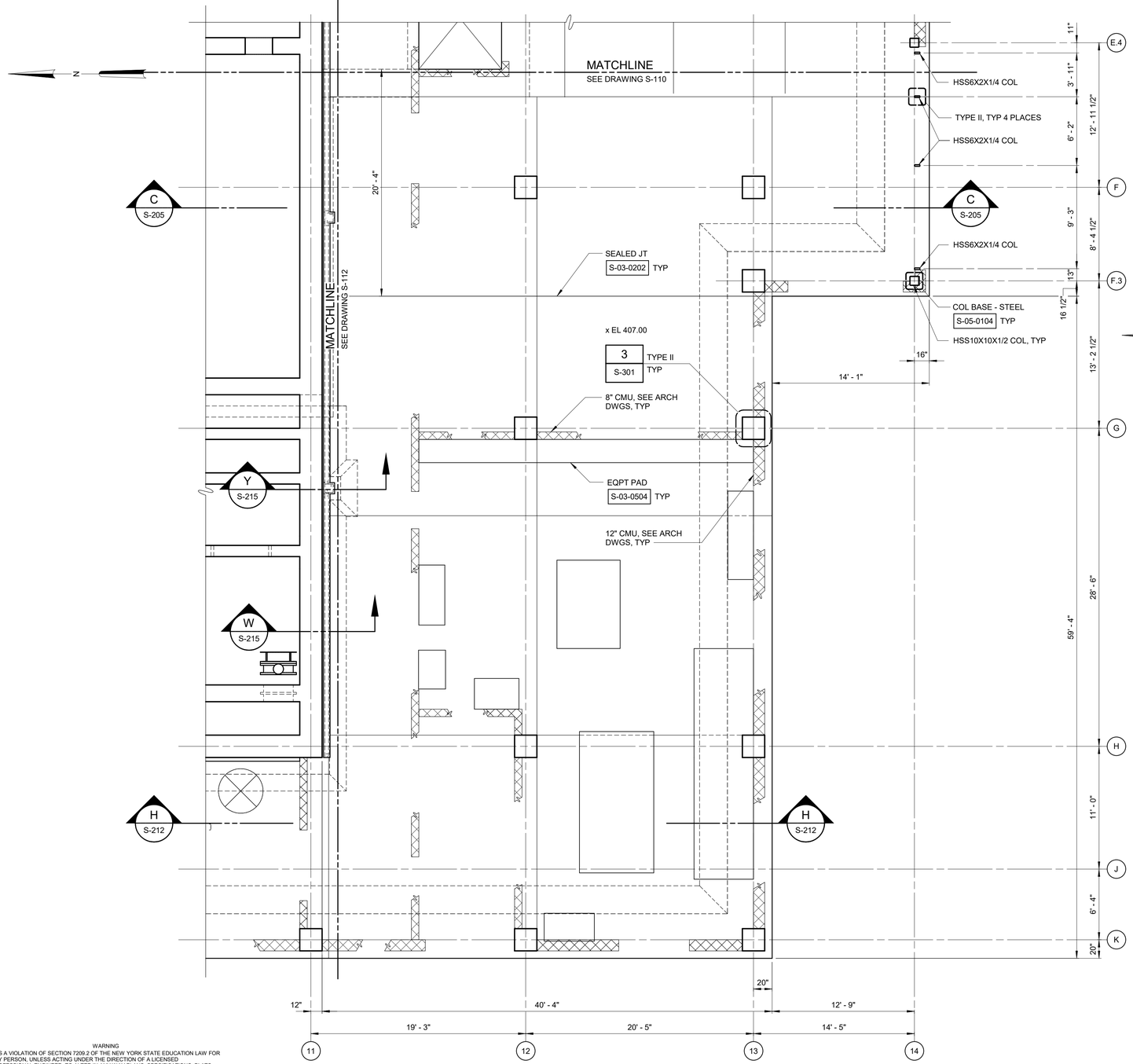

PLAN AT EL 407.00 - AREA 6

3/16" = 1'-0"

NOTES:

1. OVERALL FACILITY PLANS ARE SHOWN ON G-100 (EL 384.00), G-101 (EL 421.00), G-103 (ROOF).

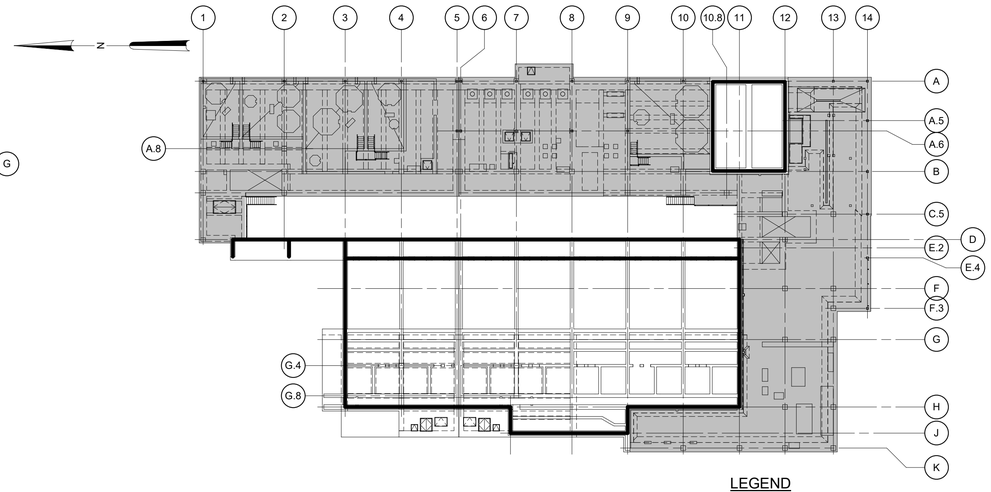

LEGEND

- PROVIDE CLASS A6 CONCRETE FULL HEIGHT OF WALL
- PROVIDE CLASS A6 CONCRETE FOR SLAB AT EL 407.00

NOTES:

1. MINIMUM EXTENT OF CLASS A6 CONCRETE AS INDICATED. REFER TO NOTE C-2 ON DWG S-001.

CLASS A6 CONCRETE LOCATION PLAN AT EL 407.00

1/32" = 1'-0"

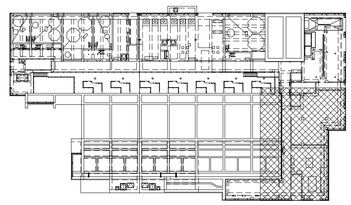

KEY PLAN

1/64" = 1'-0"

1/32" = 1'-0" 32 16 0 32'

3/16" = 1'-0" 6 4 2 0 5'

WARNING
IT IS A VIOLATION OF SECTION 7209.2 OF THE NEW YORK STATE EDUCATION LAW FOR ANY PERSON, UNLESS ACTING UNDER THE DIRECTION OF A LICENSED PROFESSIONAL ENGINEER, TO ALTER IN ANY WAY PLANS, SPECIFICATIONS, PLATS OR REPORTS TO WHICH THE SEAL OF A PROFESSIONAL ENGINEER HAS BEEN APPLIED. IF AN ITEM BEARING THE SEAL OF A PROFESSIONAL ENGINEER IS ALTERED, THE ALTERING ENGINEER SHALL AFFIX TO THE ITEM HIS SEAL AND THE NOTATION "ALTERED BY" FOLLOWED BY HIS SIGNATURE, THE DATE, AND A SPECIFIC DESCRIPTION OF THE ALTERATION.

REV	ISSUED FOR	DATE	BY

PROJECT ENGINEER:	R. FROST
DESIGNED BY:	J. EDER
DRAWN BY:	R. HERNANDEZ
CHECKED BY:	C. PHILLIPS
IF THIS BAR DOES NOT MEASURE 1" THEN DRAWING IS NOT TO FULL SCALE	0 1/2" 1"

BID SET

STATE OF NEW YORK JC EDER 097035 LICENSED PROFESSIONAL ENGINEER

Hazen

HAZEN AND SAWYER
498 SEVENTH AVENUE, 11th FLOOR
NEW YORK, NEW YORK 10018

WESTCHESTER JOINT WATER WORKS
MAMARONECK, NY

RYE LAKE WATER FILTRATION PLANT
HARRISON, NY

FILTRATION PLANT
STRUCTURAL
PLAN AT EL 407.00 - AREA 6 AND CLASS A6 CONCRETE LOCATION PLAN AT EL 407.00

DATE:	FEB 2025
HAZEN NO.:	90388-000
CONTRACT NO.:	A1364-A
DRAWING NUMBER:	S-113

Autodesk Docs://90388-000_Rye_Lake_Filtration/90388-000-WFP-S.rvt
2/20/2025 10:59:23 AM

NOTES:

1. OVERALL FACILITY PLANS ARE SHOWN ON G-100 (EL 384.00), G-101 (EL 421.00), G-103 (ROOF).
2. ALL HSS10 COLUMNS ALONG GRID LINE D SHALL BE ENCASED IN CONCRETE PER DETAIL 12/S-302.
3. INDICATES LOCATION OF VERTICAL BRACE, SEE FRAMING ELEVATIONS.

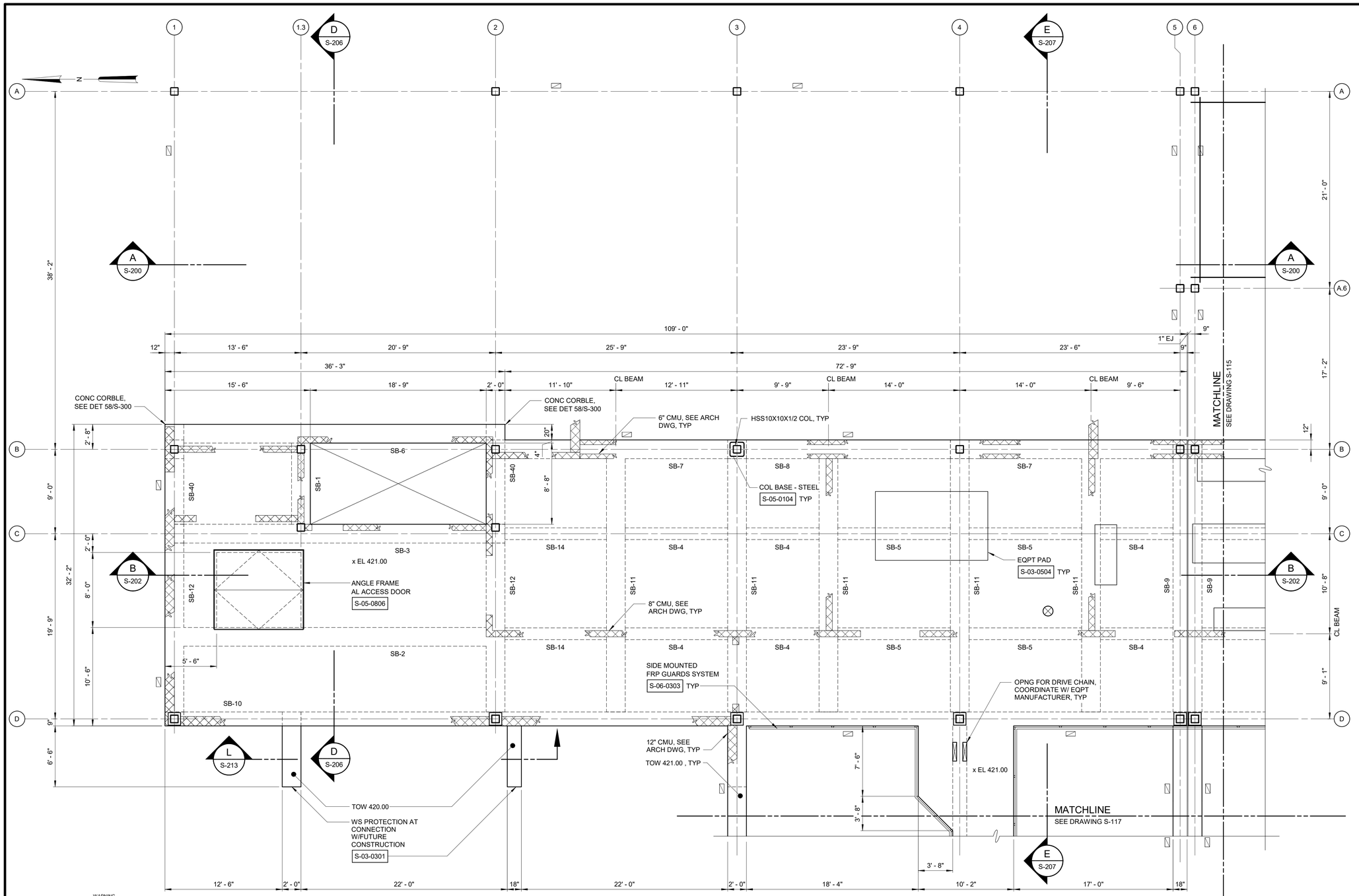

PLAN AT EL 421.00 - AREA 1

3/16" = 1'-0"

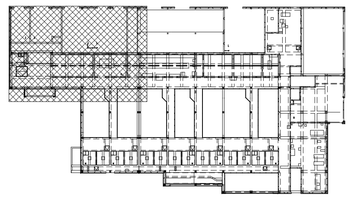

KEY PLAN

1/64" = 1'-0"

3/16" = 1'-0"

6 4 2 0 5'

WARNING
IT IS A VIOLATION OF SECTION 7209.2 OF THE NEW YORK STATE EDUCATION LAW FOR ANY PERSON, UNLESS ACTING UNDER THE DIRECTION OF A LICENSED PROFESSIONAL ENGINEER, TO ALTER IN ANY WAY PLANS, SPECIFICATIONS, PLATS OR REPORTS TO WHICH THE SEAL OF A PROFESSIONAL ENGINEER HAS BEEN APPLIED. IF AN ITEM BEARING THE SEAL OF A PROFESSIONAL ENGINEER IS ALTERED, THE ALTERING ENGINEER SHALL AFFIX TO THE ITEM HIS SEAL AND THE NOTATION "ALTERED BY" FOLLOWED BY HIS SIGNATURE, THE DATE, AND A SPECIFIC DESCRIPTION OF THE ALTERATION.

REV	ISSUED FOR	DATE	BY

PROJECT ENGINEER:	R. FROST
DESIGNED BY:	J. EDER
DRAWN BY:	R. HERNANDEZ
CHECKED BY:	C. PHILLIPS

IF THIS BAR DOES NOT MEASURE 1" THEN DRAWING IS NOT TO FULL SCALE 0 1/2" 1"

BID SET

STATE OF NEW YORK · JC EDER · 097035 · LICENSED PROFESSIONAL ENGINEER

Hazen

HAZEN AND SAWYER
498 SEVENTH AVENUE, 11th FLOOR
NEW YORK, NEW YORK 10018

WESTCHESTER JOINT WATER WORKS
MAMARONECK, NY

RYE LAKE WATER FILTRATION PLANT
HARRISON, NY

FILTRATION PLANT
STRUCTURAL
PLAN AT EL 421.00 - AREA 1

DATE:	FEB 2025
HAZEN NO.:	90388-000
CONTRACT NO.:	A1364-A
DRAWING NUMBER:	S-114

Autodesk Docs://90388-000_Rye_Lake_Filtration/90388-000-WFP-S.rvt
2/20/2025 10:59:29 AM

NOTES:

1. OVERALL FACILITY PLANS ARE SHOWN ON G-100 (EL 384.00), G-101 (EL 421.00), G-103 (ROOF).
2. ALL HSS10 COLUMNS ALONG GRID LINE D SHALL BE ENCASED IN CONCRETE PER DETAIL 12/S-302.
3. ▨ INDICATES LOCATION OF VERTICAL BRACE, SEE FRAMING ELEVATIONS.

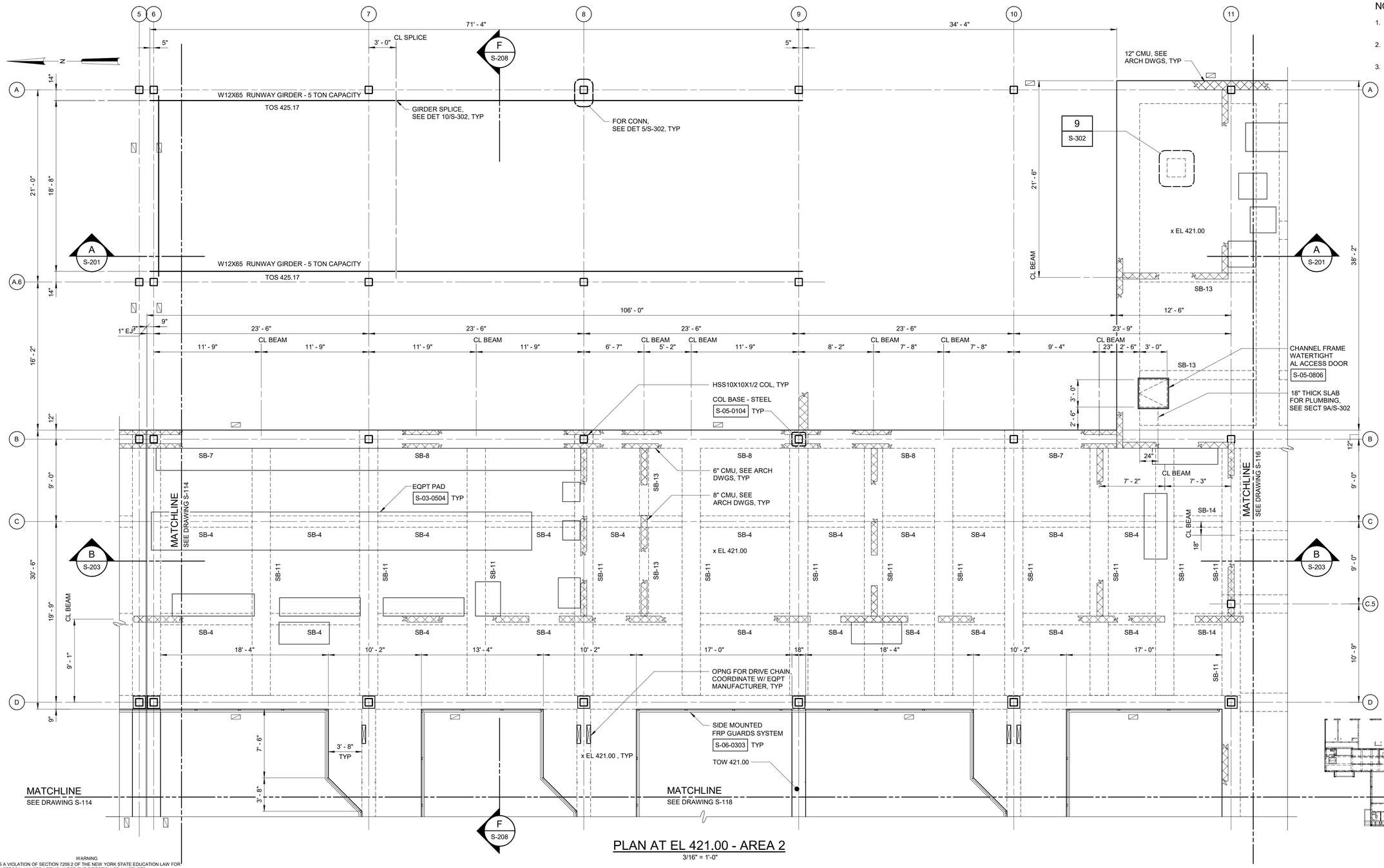

PLAN AT EL 421.00 - AREA 2

3/16" = 1'-0"

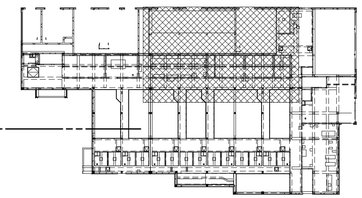

KEY PLAN

1/64" = 1'-0"

3/16" = 1'-0"

6 4 2 0 5'

WARNING
IT IS A VIOLATION OF SECTION 7209.2 OF THE NEW YORK STATE EDUCATION LAW FOR ANY PERSON, UNLESS ACTING UNDER THE DIRECTION OF A LICENSED PROFESSIONAL ENGINEER, TO ALTER IN ANY WAY PLANS, SPECIFICATIONS, PLATS OR REPORTS TO WHICH THE SEAL OF A PROFESSIONAL ENGINEER HAS BEEN APPLIED. IF AN ITEM BEARING THE SEAL OF A PROFESSIONAL ENGINEER IS ALTERED, THE ALTERING ENGINEER SHALL AFFIX TO THE ITEM HIS SEAL AND THE NOTATION "ALTERED BY" FOLLOWED BY HIS SIGNATURE, THE DATE, AND A SPECIFIC DESCRIPTION OF THE ALTERATION.

REV	ISSUED FOR	DATE	BY

PROJECT ENGINEER:	R. FROST
DESIGNED BY:	J. EDER
DRAWN BY:	R. HERNANDEZ
CHECKED BY:	C. PHILLIPS

IF THIS BAR DOES NOT MEASURE 1" THEN DRAWING IS NOT TO FULL SCALE 0 1/2" 1"

BID SET

STATE OF NEW YORK · J.C. EDER · 097035 · LICENSED PROFESSIONAL ENGINEER

Hazen

HAZEN AND SAWYER
498 SEVENTH AVENUE, 11th FLOOR
NEW YORK, NEW YORK 10018

WESTCHESTER JOINT WATER WORKS
MAMARONECK, NY

RYE LAKE WATER FILTRATION PLANT
HARRISON, NY

FILTRATION PLANT
STRUCTURAL
PLAN AT EL 421.00 - AREA 2

DATE:	FEB 2025
HAZEN NO.:	90388-000
CONTRACT NO.:	A1364-A
DRAWING NUMBER:	S-115

Autodesk Docs://90388-000_Rye_Lake_Filtration/90388-000-WPP-S.rvt
2/20/2025 10:59:28 AM

NOTES:

1. OVERALL FACILITY PLANS ARE SHOWN ON G-100 (EL 384.00), G-101 (EL 421.00), G-103 (ROOF).
2. ALL HSS10 COLUMNS ALONG GRID LINE D SHALL BE ENCASED IN CONCRETE PER DETAIL 12/S-302.
3. ALL STRUCTURAL STEEL THAT IS NOT ENCASED IN CONCRETE SHALL BE GALVANIZED.
4. ▨ INDICATES LOCATION OF VERTICAL BRACE, SEE FRAMING ELEVATIONS.

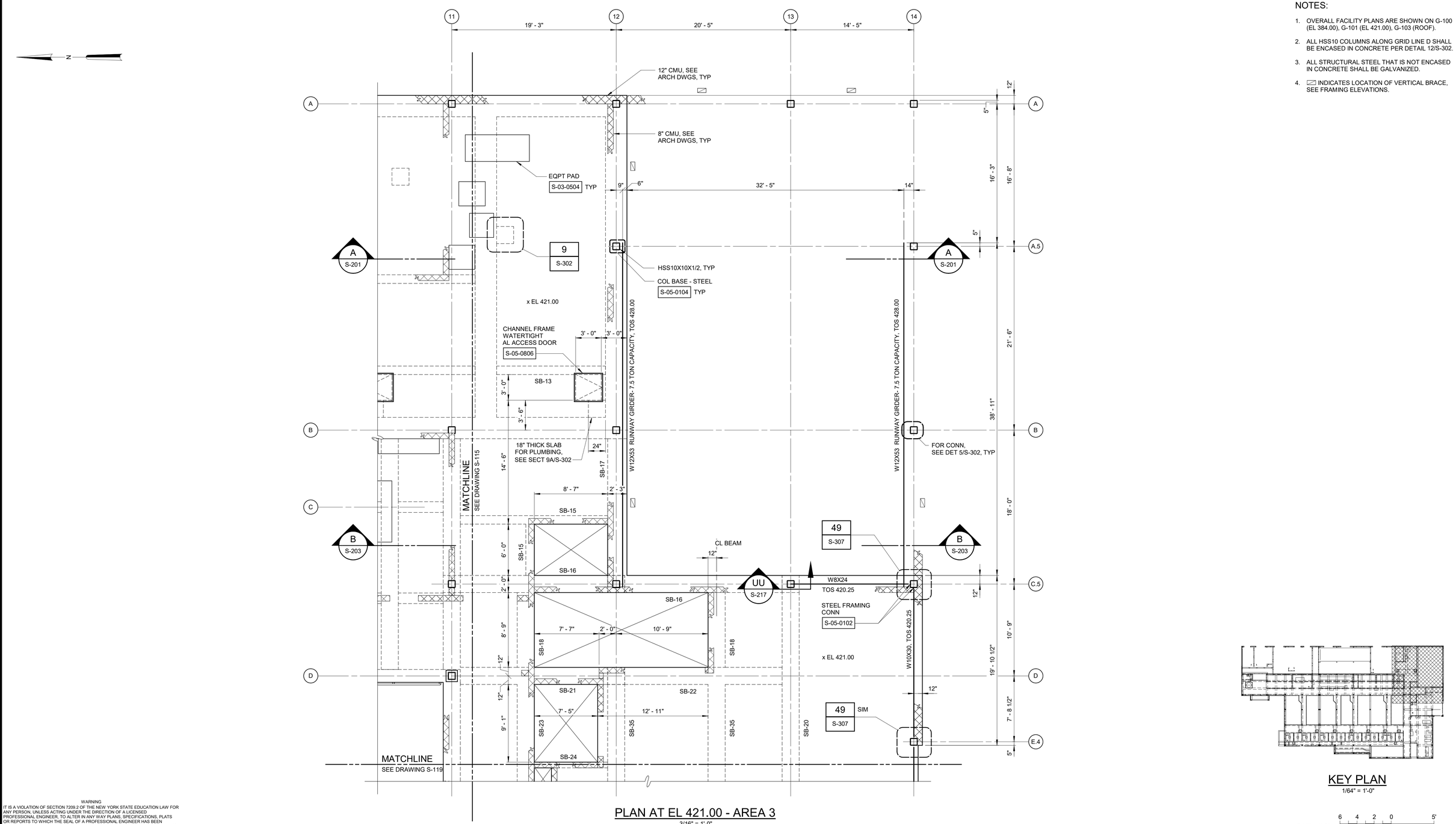

PLAN AT EL 421.00 - AREA 3

3/16" = 1'-0"

KEY PLAN

1/64" = 1'-0"

3/16" = 1'-0" 6 4 2 0 5'

WARNING
IT IS A VIOLATION OF SECTION 7209.2 OF THE NEW YORK STATE EDUCATION LAW FOR ANY PERSON, UNLESS ACTING UNDER THE DIRECTION OF A LICENSED PROFESSIONAL ENGINEER, TO ALTER IN ANY WAY PLANS, SPECIFICATIONS, PLATS OR REPORTS TO WHICH THE SEAL OF A PROFESSIONAL ENGINEER HAS BEEN APPLIED. IF AN ITEM BEARING THE SEAL OF A PROFESSIONAL ENGINEER IS ALTERED, THE ALTERING ENGINEER SHALL AFFIX TO THE ITEM HIS SEAL AND THE NOTATION "ALTERED BY" FOLLOWED BY HIS SIGNATURE, THE DATE, AND A SPECIFIC DESCRIPTION OF THE ALTERATION.

REV	ISSUED FOR	DATE	BY

PROJECT ENGINEER:	R. FROST
DESIGNED BY:	J. EDER
DRAWN BY:	R. HERNANDEZ
CHECKED BY:	C. PHILLIPS
IF THIS BAR DOES NOT MEASURE 1" THEN DRAWING IS NOT TO FULL SCALE	0 1/2" 1"

BID SET

STATE OF NEW YORK · JC. EDER · 097035 · LICENSED PROFESSIONAL ENGINEER

Hazen

HAZEN AND SAWYER
498 SEVENTH AVENUE, 11th FLOOR
NEW YORK, NEW YORK 10018

WESTCHESTER JOINT WATER WORKS
MAMARONECK, NY

RYE LAKE WATER FILTRATION PLANT
HARRISON, NY

FILTRATION PLANT
STRUCTURAL
PLAN AT EL 421.00 - AREA 3

DATE:	FEB 2025
HAZEN NO.:	90388-000
CONTRACT NO.:	A1364-A
DRAWING NUMBER:	S-116

Autodesk Docs://90388-000_Rye_Lake_Filtration/90388-000-WFP-S.rvt
2/20/2025 10:59:30 AM

NOTES:

1. OVERALL FACILITY PLANS ARE SHOWN ON G-100 (EL 384.00), G-101 (EL 421.00), G-103 (ROOF).
2. ALL HSS10 COLUMNS SHOWN ON THIS DRAWING SHALL BE ENCASED IN CONCRETE PER DETAIL 12/S-302.
3. * DENOTES DIMENSIONS SHALL BE VERIFIED WITH EQUIPMENT MANUFACTURER.
4. ▨ INDICATES LOCATION OF VERTICAL BRACE, SEE FRAMING ELEVATIONS.

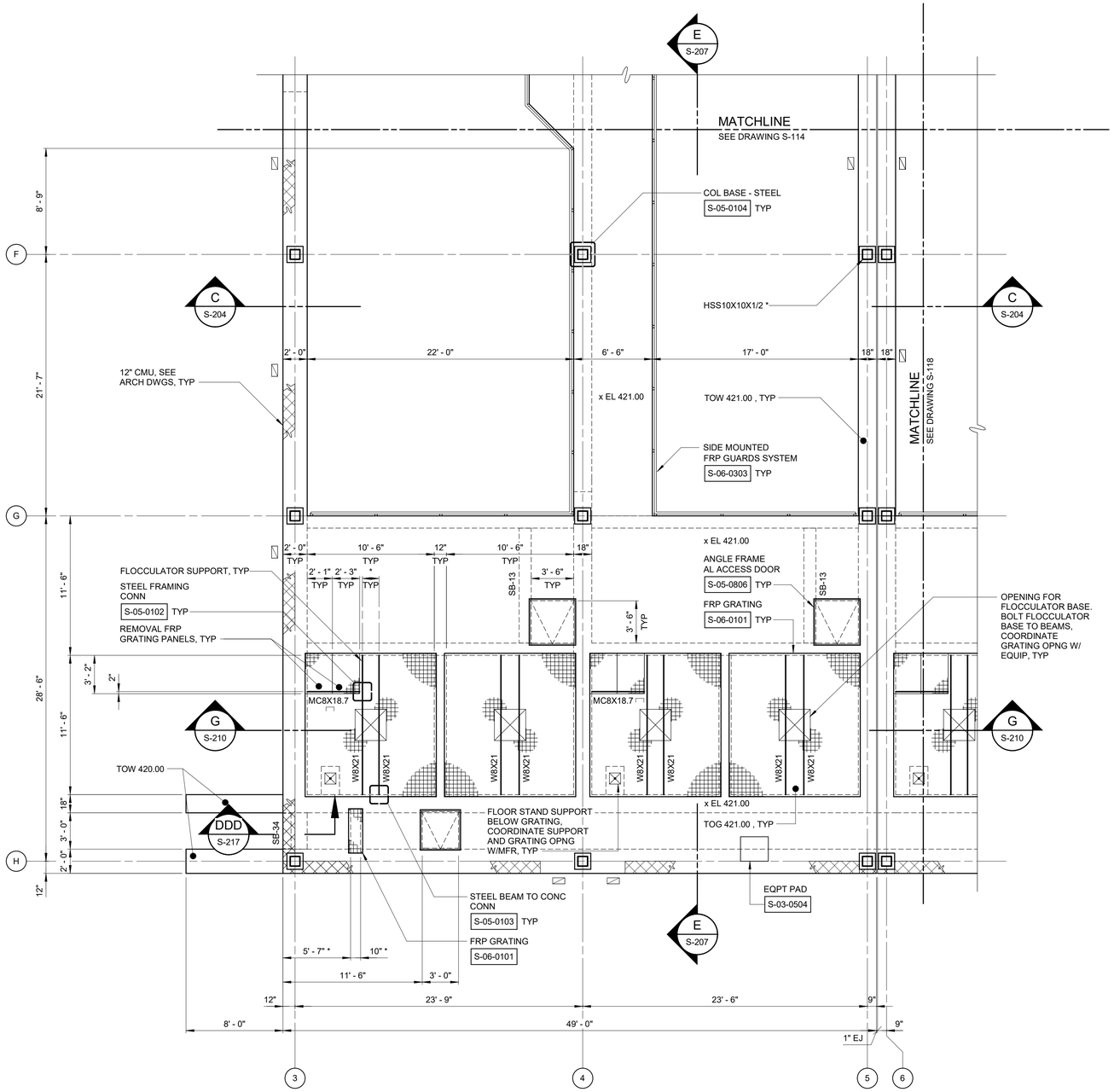

PLAN AT EL 421.00 - AREA 4

3/16" = 1'-0"

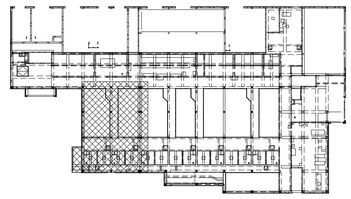

KEY PLAN

1/64" = 1'-0"

3/16" = 1'-0" 6 4 2 0 5'

WARNING
IT IS A VIOLATION OF SECTION 7209.2 OF THE NEW YORK STATE EDUCATION LAW FOR ANY PERSON, UNLESS ACTING UNDER THE DIRECTION OF A LICENSED PROFESSIONAL ENGINEER, TO ALTER IN ANY WAY PLANS, SPECIFICATIONS, PLATS OR REPORTS TO WHICH THE SEAL OF A PROFESSIONAL ENGINEER HAS BEEN APPLIED. IF AN ITEM BEARING THE SEAL OF A PROFESSIONAL ENGINEER IS ALTERED, THE ALTERING ENGINEER SHALL AFFIX TO THE ITEM HIS SEAL AND THE NOTATION "ALTERED BY" FOLLOWED BY HIS SIGNATURE, THE DATE, AND A SPECIFIC DESCRIPTION OF THE ALTERATION.

REV	ISSUED FOR	DATE	BY

PROJECT ENGINEER:	R. FROST
DESIGNED BY:	J. EDER
DRAWN BY:	R. HERNANDEZ
CHECKED BY:	C. PHILLIPS

IF THIS BAR DOES NOT MEASURE 1" THEN DRAWING IS NOT TO FULL SCALE 0 1/2" 1"

BID SET

STATE OF NEW YORK · JC EDER · 097035 · LICENSED PROFESSIONAL ENGINEER

Hazen
HAZEN AND SAWYER
498 SEVENTH AVENUE, 11th FLOOR
NEW YORK, NEW YORK 10018

WESTCHESTER JOINT WATER WORKS
MAMARONECK, NY

RYE LAKE WATER FILTRATION PLANT
HARRISON, NY

FILTRATION PLANT
STRUCTURAL
PLAN AT EL 421.00 - AREA 4

DATE:	FEB 2025
HAZEN NO.:	90388-000
CONTRACT NO.:	A1364-A
DRAWING NUMBER:	S-117

Autodesk Docs://90388-000_Rye_Lake_Filtration/90388-000-WPP-S.rvt
2/20/2025 10:59:33 AM

NOTES:

1. OVERALL FACILITY PLANS ARE SHOWN ON G-100 (EL 384.00), G-101 (EL 421.00), G-103 (ROOF).
2. ALL HSS10 COLUMNS SHOWN ON THIS DRAWING SHALL BE ENCASED IN CONCRETE PER DETAIL 12/S-302 UNLESS NOTED OTHERWISE.
3. * DENOTES DIMENSIONS SHALL BE VERIFIED WITH EQUIPMENT MANUFACTURER.
4. ▨ INDICATES LOCATION OF VERTICAL BRACE, SEE FRAMING ELEVATIONS.

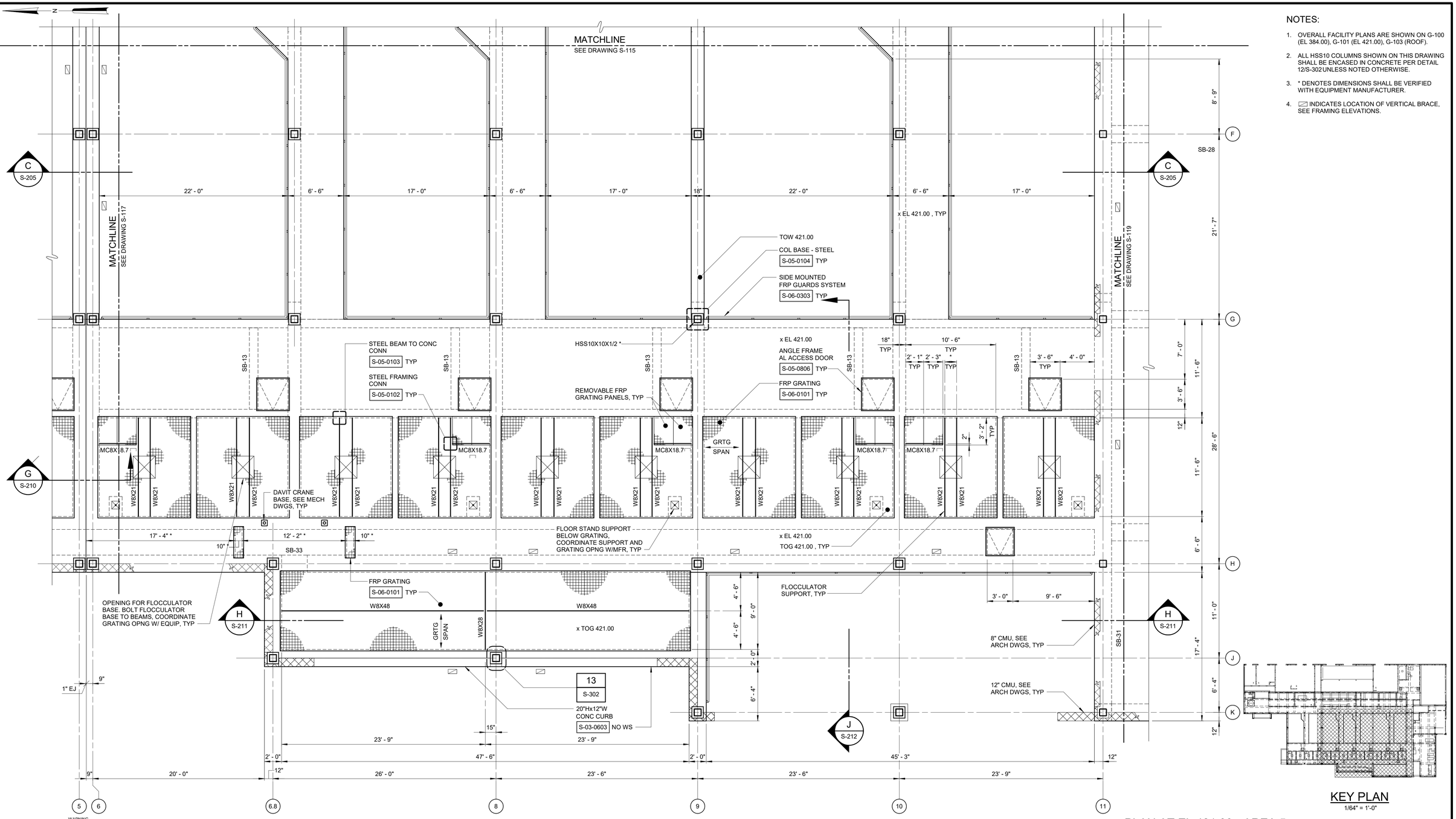

KEY PLAN
1/64" = 1'-0"

PLAN AT EL 421.00 - AREA 5
3/16" = 1'-0"

3/16" = 1'-0" 6 4 2 0 5'

WARNING
IT IS A VIOLATION OF SECTION 7209.2 OF THE NEW YORK STATE EDUCATION LAW FOR ANY PERSON, UNLESS ACTING UNDER THE DIRECTION OF A LICENSED PROFESSIONAL ENGINEER, TO ALTER IN ANY WAY PLANS, SPECIFICATIONS, PLATS OR REPORTS TO WHICH THE SEAL OF A PROFESSIONAL ENGINEER HAS BEEN APPLIED. IF AN ITEM BEARING THE SEAL OF A PROFESSIONAL ENGINEER IS ALTERED, THE ALTERING ENGINEER SHALL AFFIX TO THE ITEM HIS SEAL AND THE NOTATION "ALTERED BY" FOLLOWED BY HIS SIGNATURE, THE DATE, AND A SPECIFIC DESCRIPTION OF THE ALTERATION.

REV	ISSUED FOR	DATE	BY

PROJECT ENGINEER:	R. FROST
DESIGNED BY:	J. EDER
DRAWN BY:	R. HERNANDEZ
CHECKED BY:	C. PHILLIPS

IF THIS BAR DOES NOT MEASURE 1" THEN DRAWING IS NOT TO FULL SCALE 0 1/2" 1"

BID SET

STATE OF NEW YORK · JC EDER · 097035 · LICENSED PROFESSIONAL ENGINEER

Hazen

HAZEN AND SAWYER
498 SEVENTH AVENUE, 11th FLOOR
NEW YORK, NEW YORK 10018

WESTCHESTER JOINT WATER WORKS
MAMARONECK, NY

RYE LAKE WATER FILTRATION PLANT
HARRISON, NY

FILTRATION PLANT
STRUCTURAL
PLAN AT EL 421.00 - AREA 5

DATE:	FEB 2025
HAZEN NO.:	90388-000
CONTRACT NO.:	A1364-A
DRAWING NUMBER:	S-118

Autodesk Docs://90388-000_Rye_Lake_Filtration/90388-000-WFP-S.rvt
2/20/2025 10:59:35 AM

NOTES:

1. OVERALL FACILITY PLANS ARE SHOWN ON G-100 (EL 384.00), G-101 (EL 421.00), G-103 (ROOF).
2. ALL HSS10 COLUMNS ALONG GRID LINE 11 SHALL BE ENCASED IN CONCRETE PER DETAIL 12/S-302.
3. ALL STRUCTURAL STEEL THAT IS NOT ENCASED IN CONCRETE SHALL BE GALVANIZED.
4. ▨ INDICATES LOCATION OF VERTICAL BRACE, SEE FRAMING ELEVATIONS.

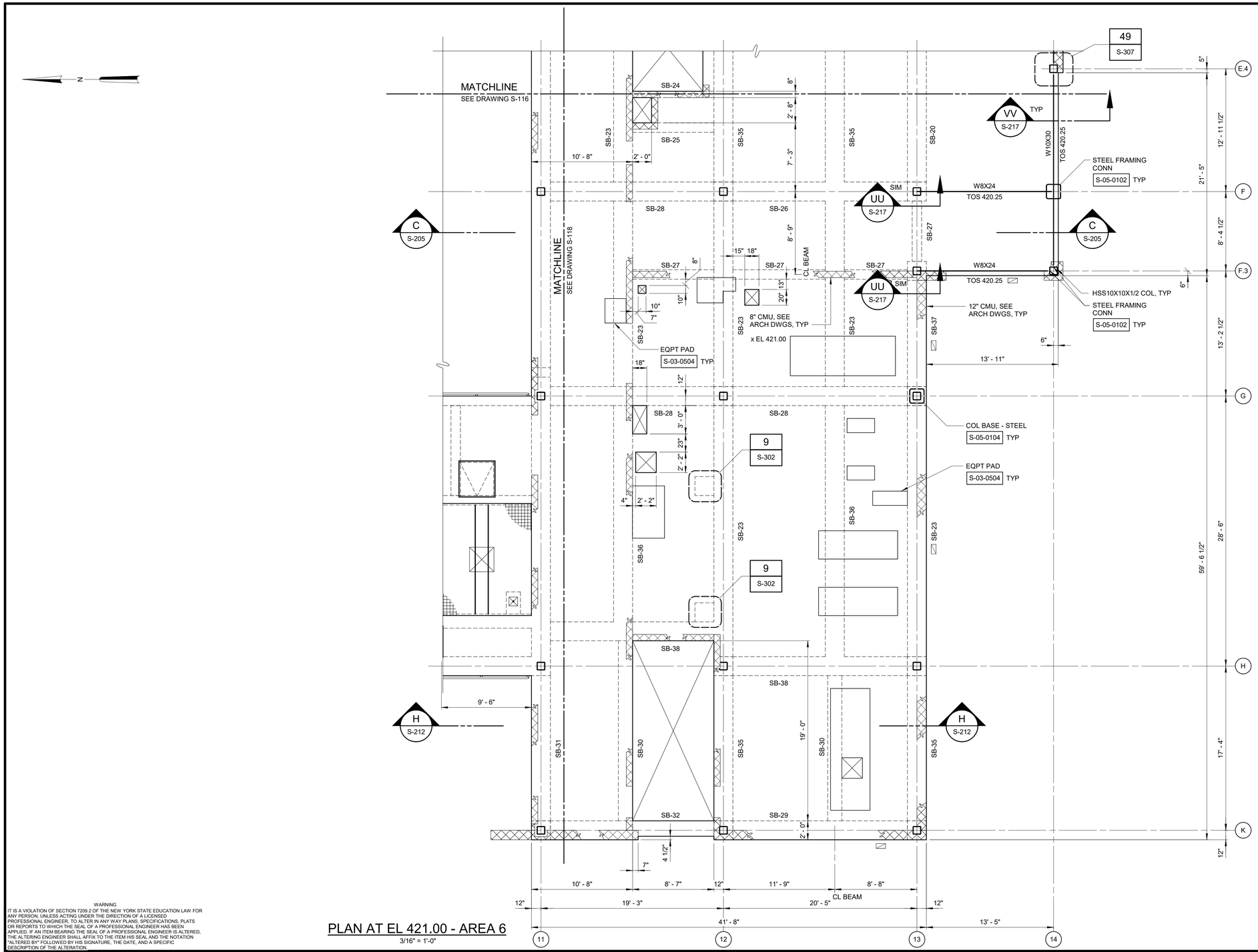

PLAN AT EL 421.00 - AREA 6

3/16" = 1'-0"

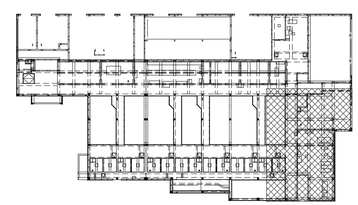

KEY PLAN

1/64" = 1'-0"

3/16" = 1'-0"

6 4 2 0 5'

WARNING

IT IS A VIOLATION OF SECTION 7209.2 OF THE NEW YORK STATE EDUCATION LAW FOR ANY PERSON, UNLESS ACTING UNDER THE DIRECTION OF A LICENSED PROFESSIONAL ENGINEER, TO ALTER IN ANY WAY PLANS, SPECIFICATIONS, PLATS OR REPORTS TO WHICH THE SEAL OF A PROFESSIONAL ENGINEER HAS BEEN APPLIED. IF AN ITEM BEARING THE SEAL OF A PROFESSIONAL ENGINEER IS ALTERED, THE ALTERING ENGINEER SHALL AFFIX TO THE ITEM HIS SEAL AND THE NOTATION "ALTERED BY" FOLLOWED BY HIS SIGNATURE, THE DATE, AND A SPECIFIC DESCRIPTION OF THE ALTERATION.

REV	ISSUED FOR	DATE	BY

PROJECT ENGINEER:	R. FROST
DESIGNED BY:	J. EDER
DRAWN BY:	R. HERNANDEZ
CHECKED BY:	C. PHILLIPS
IF THIS BAR DOES NOT MEASURE 1" THEN DRAWING IS NOT TO FULL SCALE	0 1/2" 1"

BID SET

STATE OF NEW YORK
JC EDER
097035
LICENSED PROFESSIONAL ENGINEER

Hazen

HAZEN AND SAWYER
498 SEVENTH AVENUE, 11th FLOOR
NEW YORK, NEW YORK 10018

WESTCHESTER JOINT WATER WORKS
MAMARONECK, NY

RYE LAKE WATER FILTRATION PLANT
HARRISON, NY

FILTRATION PLANT
STRUCTURAL
PLAN AT EL 421.00 - AREA 6

DATE:	FEB 2025
HAZEN NO.:	90388-000
CONTRACT NO.:	A1364-A
DRAWING NUMBER:	S-119

Autodesk Docs://90388-000_Rye_Lake_Filtration/90388-000-WFP-S.rvt
2/20/2025 10:59:38 AM

NOTES:

1. OVERALL FACILITY PLANS ARE SHOWN ON G-100 (EL 384.00), G-101 (EL 421.00), G-103 (ROOF).
2. * DENOTES CONCRETE ENCASED FRAMING. FOR CONCRETE ENCASED BEAMS, SEE DETAIL 7/S-302 UNLESS NOTED OTHERWISE.
3. ALL HSS10 COLUMNS ALONG GRID LINE D SHALL BE ENCASED IN CONCRETE PER DETAIL 12/S-302.
4. FOR STEEL BEAM TO COLUMN CONNECTIONS, SEE STANDARD DETAIL S-05-0102 TYPE II. FOR STEEL BEAM TO BEAM CONNECTIONS, SEE STANDARD DETAIL S-05-0102 TYPE I UNLESS NOTED OTHERWISE.
5. INDICATES LOCATION OF VERTICAL BRACE, SEE FRAMING ELEVATIONS.
6. ALL STRUCTURAL STEEL THAT IS NOT ENCASED IN CONCRETE SHALL BE GALVANIZED.
7. METAL DECK SHALL BE 1.5 C 20 GAGE. FASTENER PATTERN SHALL BE 36/4, 5/8" PUDDLE WELDS W/ 2#10 SCREW SIDELAP FASTENERS PER SPAN EQUALLY SPACED. AT OPENINGS IN METAL DECK, DECK SHALL BE ATTACHED TO STRUCTURAL MEMBERS ON ALL SIDES WITH #10 SCREWS AT 9" MAX. PROVIDE POUR STOPS AT ALL EDGES UNO.
8. PROVIDE CONNECTION PLATES FOR FUTURE CONSTRUCTION IDENTICAL TO THOSE UNDER THIS CONTRACT.

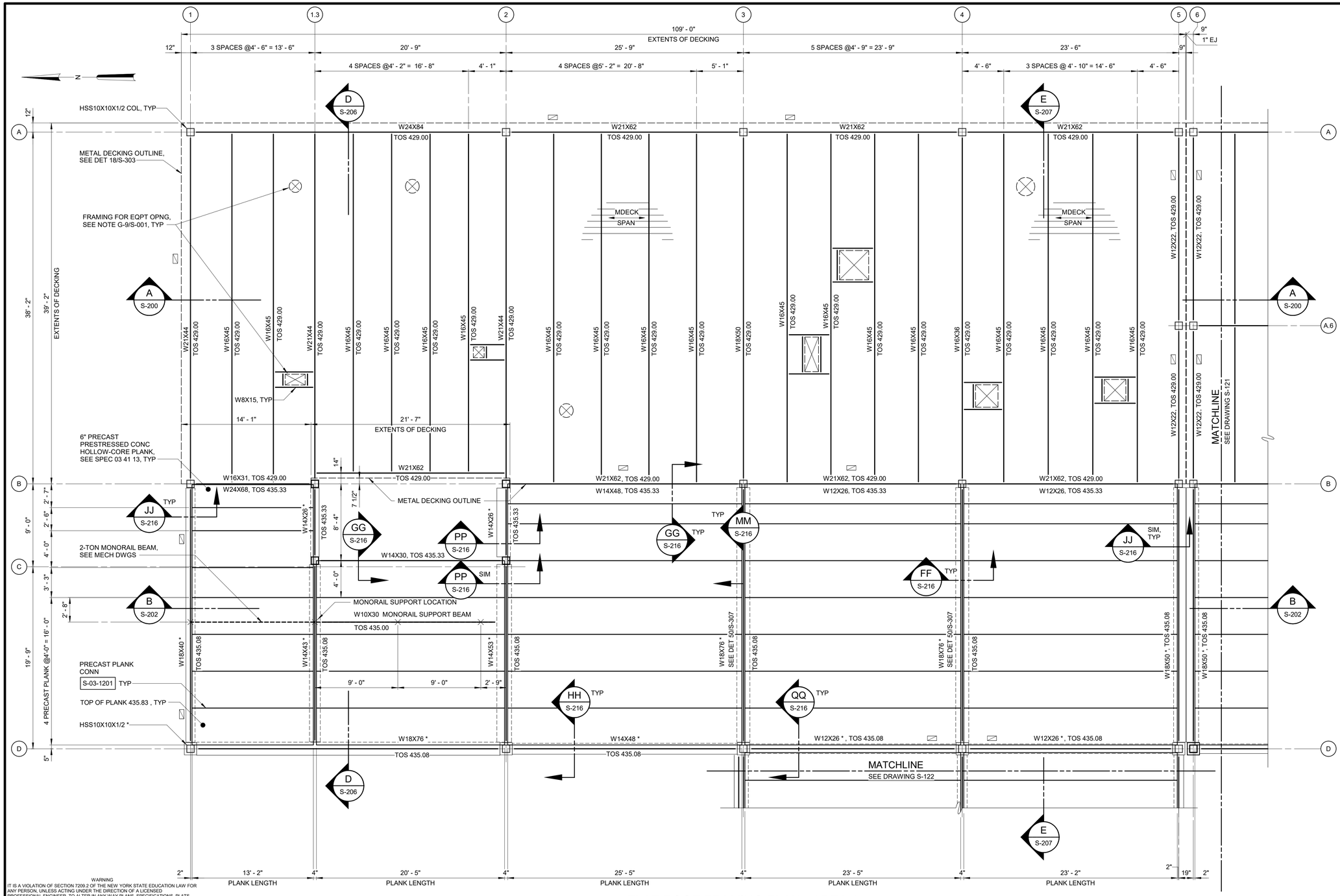

FLAT ROOF FRAMING PLAN - AREA 1

3/16" = 1'-0"

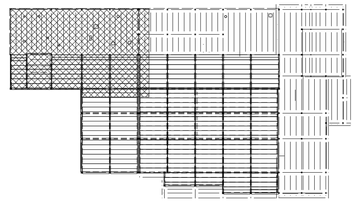

KEY PLAN

1/64" = 1'-0"

3/16" = 1'-0"

WARNING
IT IS A VIOLATION OF SECTION 7209.2 OF THE NEW YORK STATE EDUCATION LAW FOR ANY PERSON, UNLESS ACTING UNDER THE DIRECTION OF A LICENSED PROFESSIONAL ENGINEER, TO ALTER IN ANY WAY PLANS, SPECIFICATIONS, PLATS OR REPORTS TO WHICH THE SEAL OF A PROFESSIONAL ENGINEER HAS BEEN APPLIED. IF AN ITEM BEARING THE SEAL OF A PROFESSIONAL ENGINEER IS ALTERED, THE ALTERING ENGINEER SHALL AFFIX TO THE ITEM HIS SEAL AND THE NOTATION "ALTERED BY" FOLLOWED BY HIS SIGNATURE, THE DATE, AND A SPECIFIC DESCRIPTION OF THE ALTERATION.

REV	ISSUED FOR	DATE	BY

PROJECT ENGINEER:	R. FROST
DESIGNED BY:	J. EDER
DRAWN BY:	R. HERNANDEZ
CHECKED BY:	C. PHILLIPS
IF THIS BAR DOES NOT MEASURE 1" THEN DRAWING IS NOT TO FULL SCALE	0 1/2" 1"

BID SET

STATE OF NEW YORK · JC EDER · 097035 · LICENSED PROFESSIONAL ENGINEER

Hazen
HAZEN AND SAWYER
498 SEVENTH AVENUE, 11th FLOOR
NEW YORK, NEW YORK 10018

WESTCHESTER JOINT WATER WORKS
MAMARONECK, NY

RYE LAKE WATER FILTRATION PLANT
HARRISON, NY

FILTRATION PLANT
STRUCTURAL
FLAT ROOF FRAMING PLAN - AREA 1

DATE:	FEB 2025
HAZEN NO.:	90388-000
CONTRACT NO.:	A1364-A
DRAWING NUMBER:	S-120

Autodesk Docs://90388-000_Rye_Lake_Filtration/90388-000-WFP-S.rvt
2/20/2025 10:59:40 AM

NOTES:

1. OVERALL FACILITY PLANS ARE SHOWN ON G-100 (EL 384.00), G-101 (EL 421.00), G-103 (ROOF).
2. * DENOTES CONCRETE ENCASED FRAMING. FOR CONCRETE ENCASED BEAMS, SEE DETAIL 7/S-302 UNLESS NOTED OTHERWISE.
3. ALL HSS10 COLUMNS ALONG GRID LINE D SHALL BE ENCASED IN CONCRETE PER DETAIL 12/S-302.
4. FOR STEEL BEAM TO COLUMN CONNECTIONS, SEE STANDARD DETAIL S-05-0102 TYPE II. FOR STEEL BEAM TO BEAM CONNECTIONS, SEE STANDARD DETAIL S-05-0102 TYPE I UNLESS NOTED OTHERWISE.
5. ▱ INDICATES LOCATION OF VERTICAL BRACE, SEE FRAMING ELEVATIONS.
6. ALL STRUCTURAL STEEL THAT IS NOT ENCASED IN CONCRETE SHALL BE GALVANIZED.
7. METAL DECK SHALL BE 1.5 C 20 GAGE. FASTENER PATTERN SHALL BE 36/4, 5/8" PUDDLE WELDS W/ 2#10 SCREW SIDELAP FASTENERS PER SPAN EQUALLY SPACED. AT OPENINGS IN METAL DECK, DECK SHALL BE ATTACHED TO STRUCTURAL MEMBERS ON ALL SIDES WITH #10 SCREWS AT 9" MAX. PROVIDE POUR STOPS AT ALL EDGES UNO.

FLAT ROOF FRAMING PLAN - AREA 2

3/16" = 1'-0"

KEY PLAN

1/64" = 1'-0"

WARNING
IT IS A VIOLATION OF SECTION 7209.2 OF THE NEW YORK STATE EDUCATION LAW FOR ANY PERSON, UNLESS ACTING UNDER THE DIRECTION OF A LICENSED PROFESSIONAL ENGINEER, TO ALTER IN ANY WAY PLANS, SPECIFICATIONS, PLATS OR REPORTS TO WHICH THE SEAL OF A PROFESSIONAL ENGINEER HAS BEEN APPLIED. IF AN ITEM BEARING THE SEAL OF A PROFESSIONAL ENGINEER IS ALTERED, THE ALTERING ENGINEER SHALL AFFIX TO THE ITEM HIS SEAL AND THE NOTATION "ALTERED BY" FOLLOWED BY HIS SIGNATURE, THE DATE, AND A SPECIFIC DESCRIPTION OF THE ALTERATION.

REV	ISSUED FOR	DATE	BY

PROJECT ENGINEER:	R. FROST
DESIGNED BY:	J. EDER
DRAWN BY:	R. HERNANDEZ
CHECKED BY:	C. PHILLIPS

IF THIS BAR DOES NOT MEASURE 1" THEN DRAWING IS NOT TO FULL SCALE (0, 1/2", 1")

BID SET

STATE OF NEW YORK · JC EDER · 097035 · LICENSED PROFESSIONAL ENGINEER

Hazen
HAZEN AND SAWYER
498 SEVENTH AVENUE, 11th FLOOR
NEW YORK, NEW YORK 10018

WESTCHESTER JOINT WATER WORKS
MAMARONECK, NY

RYE LAKE WATER FILTRATION PLANT
HARRISON, NY

FILTRATION PLANT
STRUCTURAL
FLAT ROOF FRAMING PLAN - AREA 2

DATE:	FEB 2025
HAZEN NO.:	90388-000
CONTRACT NO.:	A1364-A
DRAWING NUMBER:	S-121

Autodesk Docs://90388-000_Rye_Lake_Filtration/90388-000-WFP-S.rvt
2/20/2025 10:59:43 AM

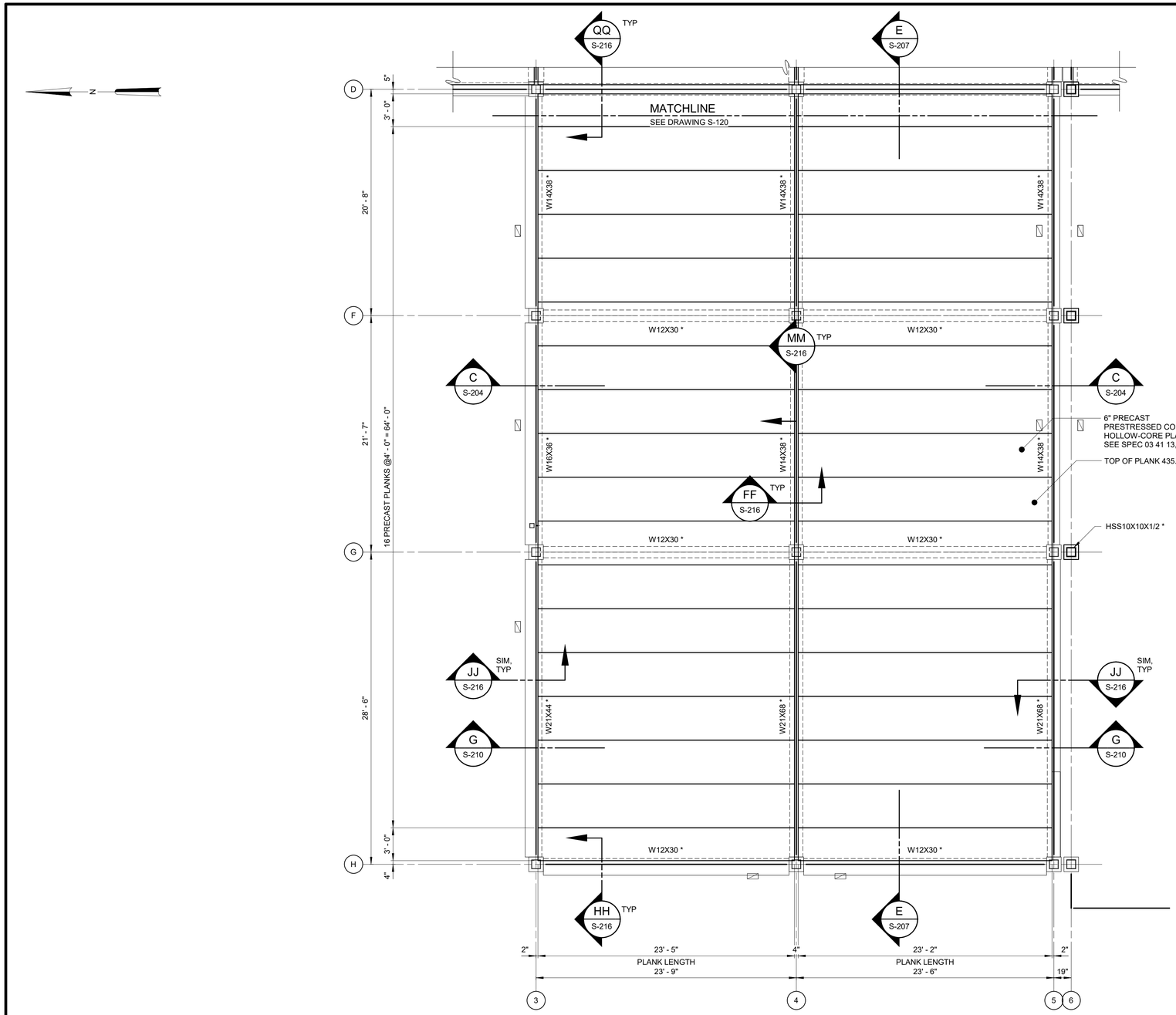

NOTE:
TOP OF STEEL ELEVATION 435.08
UNLESS NOTED OTHERWISE.

FLAT ROOF FRAMING PLAN - AREA 4

3/16" = 1'-0"

NOTES:

1. OVERALL FACILITY PLANS ARE SHOWN ON G-100 (EL 384.00), G-101 (EL 421.00), G-103 (ROOF).
2. * DENOTES CONCRETE ENCASED FRAMING. FOR CONCRETE ENCASED BEAMS, SEE DETAIL 7/S-302 UNLESS NOTED OTHERWISE.
3. ALL HSS10 COLUMNS SHOWN ON FLAT ROOF FRAMING PLAN - AREA 4 SHALL BE ENCASED IN CONCRETE PER DETAIL 12/S-302.
4. FOR STEEL BEAM TO COLUMN CONNECTIONS, SEE STANDARD DETAIL S-05-0102 TYPE II. FOR STEEL BEAM TO BEAM CONNECTIONS, SEE STANDARD DETAIL S-05-0102 TYPE I UNLESS NOTED OTHERWISE.
5. ▨ INDICATES LOCATION OF VERTICAL BRACE, SEE FRAMING ELEVATIONS.
6. ALL STRUCTURAL STEEL THAT IS NOT ENCASED SHALL BE GALVANIZED.

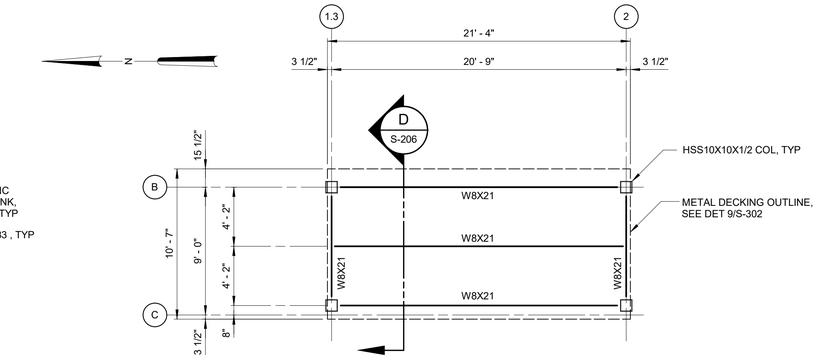

NOTE:
TOP OF STEEL 439.75.

FLAT ROOF FRAMING TOP OF STEEL 439.67

3/16" = 1'-0"

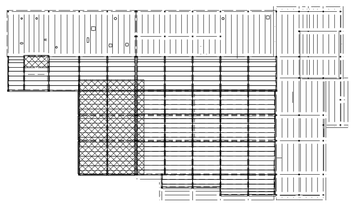

KEY PLAN

1/64" = 1'-0"

3/16" = 1'-0" 6 4 2 0 5'

WARNING
IT IS A VIOLATION OF SECTION 7209.2 OF THE NEW YORK STATE EDUCATION LAW FOR ANY PERSON, UNLESS ACTING UNDER THE DIRECTION OF A LICENSED PROFESSIONAL ENGINEER, TO ALTER IN ANY WAY PLANS, SPECIFICATIONS, PLATS OR REPORTS TO WHICH THE SEAL OF A PROFESSIONAL ENGINEER HAS BEEN APPLIED. IF AN ITEM BEARING THE SEAL OF A PROFESSIONAL ENGINEER IS ALTERED, THE ALTERING ENGINEER SHALL AFFIX TO THE ITEM HIS SEAL AND THE NOTATION "ALTERED BY" FOLLOWED BY HIS SIGNATURE, THE DATE, AND A SPECIFIC DESCRIPTION OF THE ALTERATION.

REV	ISSUED FOR	DATE	BY

PROJECT ENGINEER:	R. FROST
DESIGNED BY:	J. EDER
DRAWN BY:	R. HERNANDEZ
CHECKED BY:	C. PHILLIPS

IF THIS BAR DOES NOT MEASURE 1" THEN DRAWING IS NOT TO FULL SCALE 0 1/2" 1"

BID SET

STATE OF NEW YORK · JC EDER · 097035 · LICENSED PROFESSIONAL ENGINEER

Hazen

HAZEN AND SAWYER
498 SEVENTH AVENUE, 11th FLOOR
NEW YORK, NEW YORK 10018

WESTCHESTER JOINT WATER WORKS
MAMARONECK, NY

RYE LAKE WATER FILTRATION PLANT
HARRISON, NY

FILTRATION PLANT
STRUCTURAL
FLAT ROOF FRAMING PLANS - AREA 4 AND TOP OF STEEL 439.67

DATE:	FEB 2025
HAZEN NO.:	90388-000
CONTRACT NO.:	A1364-A
DRAWING NUMBER:	S-122

Autodesk Docs://90388-000_Rye_Lake_Filtration/90388-000-WPP-S.rvt
2/20/2025 10:59:46 AM

NOTES:

1. OVERALL FACILITY PLANS ARE SHOWN ON G-100 (EL 384.00), G-101 (EL 421.00), G-103 (ROOF).
2. * DENOTES CONCRETE ENCASED FRAMING. FOR CONCRETE ENCASED BEAMS, SEE DETAIL 7/S-302 UNLESS NOTED OTHERWISE.
3. ALL HSS10 COLUMNS SHOWN ON THIS DRAWING SHALL BE ENCASED IN CONCRETE PER DETAIL 12/S-302.
4. FOR STEEL BEAM TO COLUMN CONNECTIONS, SEE STANDARD DETAIL S-05-0102 TYPE II. FOR STEEL BEAM TO BEAM CONNECTIONS, SEE STANDARD DETAIL S-05-0102 TYPE I UNLESS NOTED OTHERWISE.
5. ▨ INDICATES LOCATION OF VERTICAL BRACE, SEE FRAMING ELEVATIONS.
6. METAL DECK SHALL BE 1.5 C 20 GAGE. FASTENER PATTERN SHALL BE 36/4, 5/8" PUDDLE WELDS W/ 2#10 SCREW SIDELAP FASTENERS PER SPAN EQUALLY SPACED. WHERE METAL DECK IS SUPPORTED ON CONCRETE ENCASED STEEL BEAMS, FASTENER PATTERN SHALL BE 36/4, 1/4"ø SCREW ANCHORS WITH 2 1/2" EMBED.

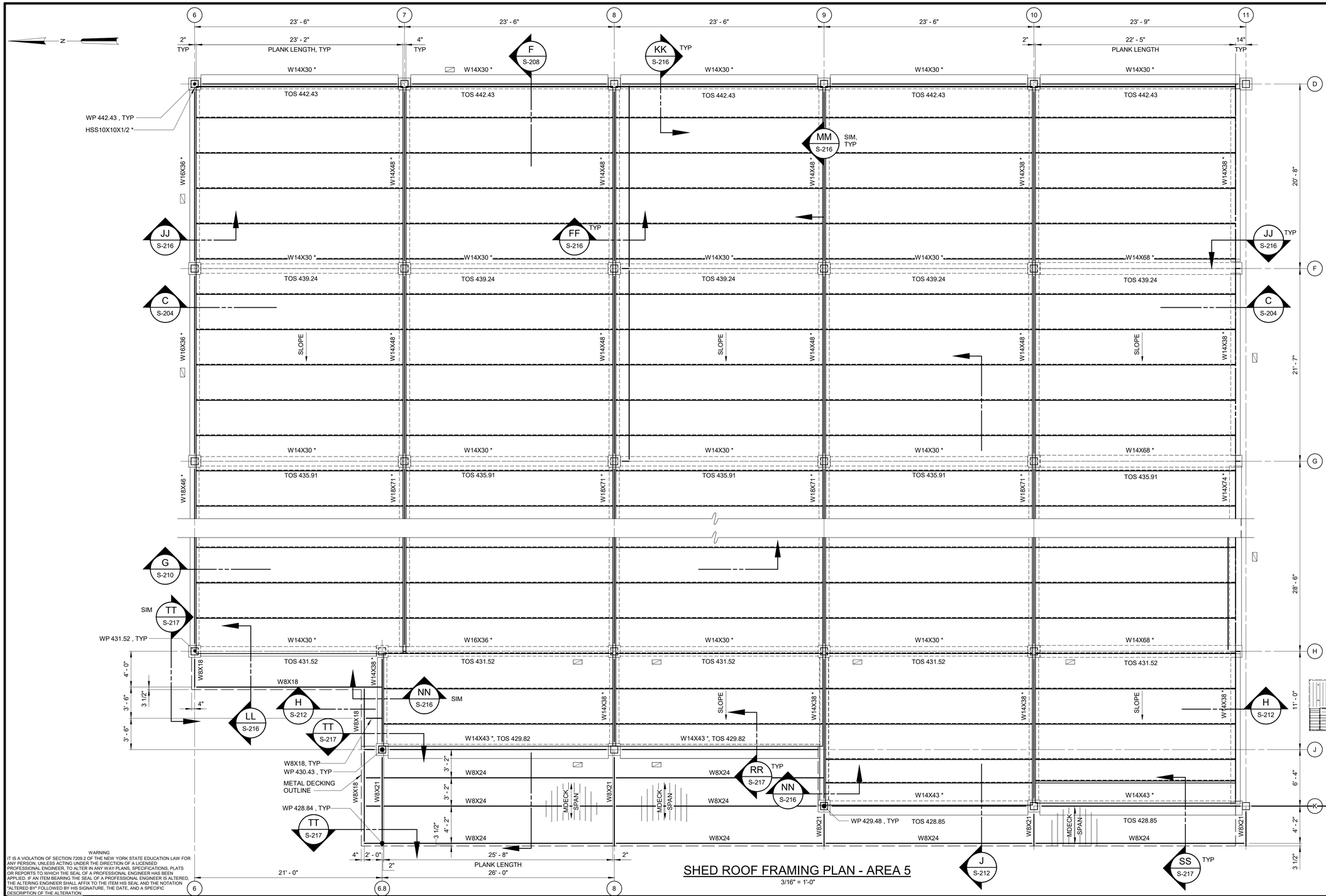

SHED ROOF FRAMING PLAN - AREA 5
3/16" = 1'-0"

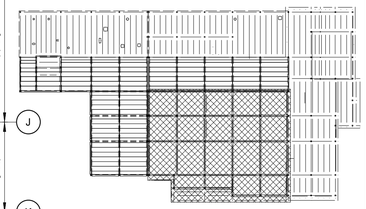

KEY PLAN
1/64" = 1'-0"

3/16" = 1'-0"

WARNING
IT IS A VIOLATION OF SECTION 7209.2 OF THE NEW YORK STATE EDUCATION LAW FOR ANY PERSON, UNLESS ACTING UNDER THE DIRECTION OF A LICENSED PROFESSIONAL ENGINEER, TO ALTER IN ANY WAY PLANS, SPECIFICATIONS, PLATS OR REPORTS TO WHICH THE SEAL OF A PROFESSIONAL ENGINEER HAS BEEN APPLIED. IF AN ITEM BEARING THE SEAL OF A PROFESSIONAL ENGINEER IS ALTERED, THE ALTERING ENGINEER SHALL AFFIX TO THE ITEM HIS SEAL AND THE NOTATION "ALTERED BY" FOLLOWED BY HIS SIGNATURE, THE DATE, AND A SPECIFIC DESCRIPTION OF THE ALTERATION.

REV	ISSUED FOR	DATE	BY

PROJECT ENGINEER:	R. FROST
DESIGNED BY:	J. EDER
DRAWN BY:	R. HERNANDEZ
CHECKED BY:	C. PHILLIPS
IF THIS BAR DOES NOT MEASURE 1" THEN DRAWING IS NOT TO FULL SCALE	0 1/2" 1"

BID SET

STATE OF NEW YORK · JC EDER · 097035 · LICENSED PROFESSIONAL ENGINEER

Hazen
HAZEN AND SAWYER
498 SEVENTH AVENUE, 11th FLOOR
NEW YORK, NEW YORK 10018

WESTCHESTER JOINT WATER WORKS
MAMARONECK, NY

RYE LAKE WATER FILTRATION PLANT
HARRISON, NY

FILTRATION PLANT
STRUCTURAL
SHED ROOF FRAMING PLAN - AREA 5

DATE:	FEB 2025
HAZEN NO.:	90388-000
CONTRACT NO.:	A1364-A
DRAWING NUMBER:	S-123

Autodesk Docs://90388-000_Rye_Lake_Filtration/90388-000-WFP-S.rvt
2/20/2025 10:59:48 AM

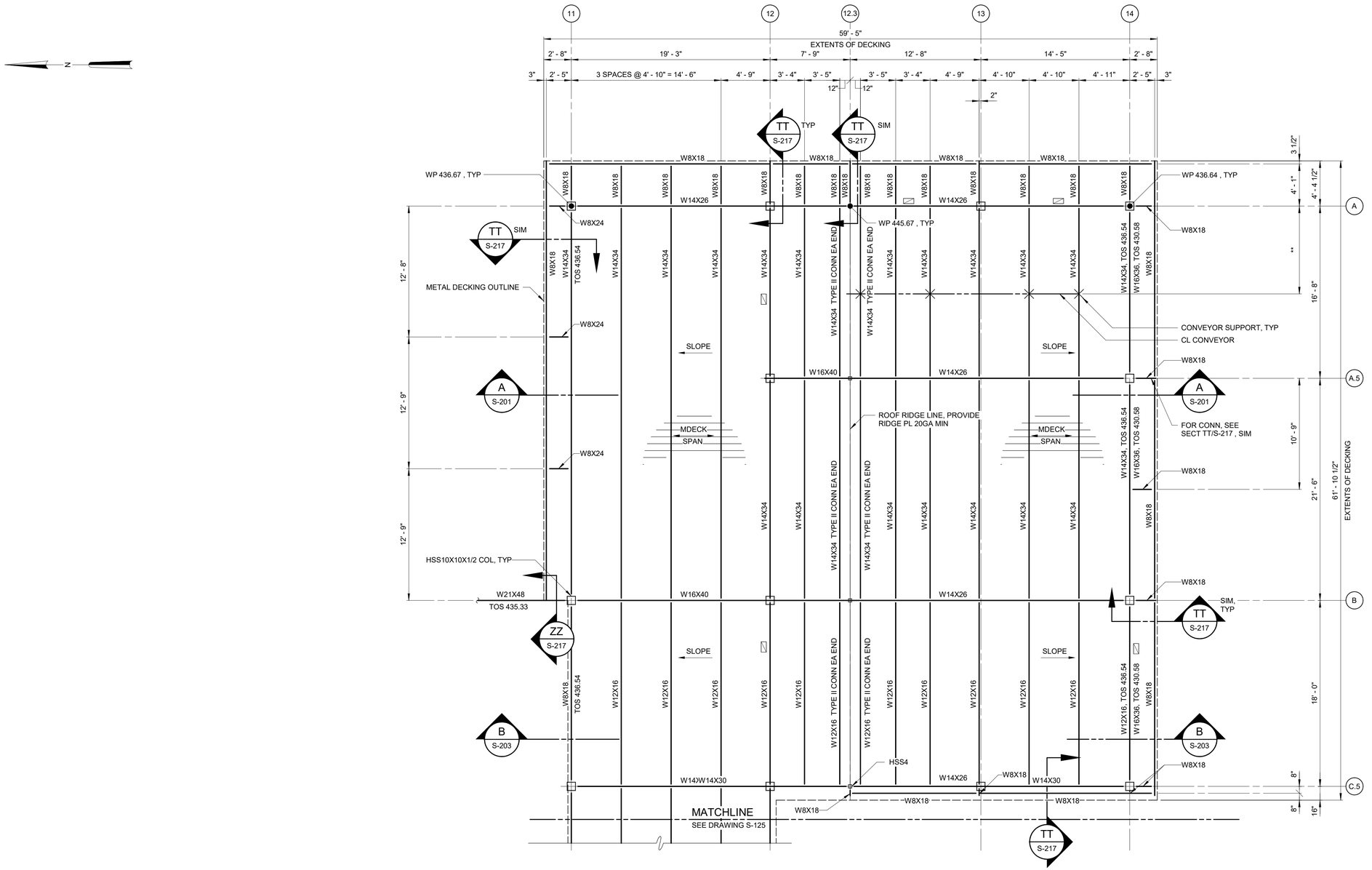

GABLE ROOF FRAMING PLAN - AREA 3

3/16" = 1'-0"

NOTES:

1. OVERALL FACILITY PLANS ARE SHOWN ON G-100 (EL 384.00), G-101 (EL 421.00), G-103 (ROOF).
2. FOR STEEL BEAM TO COLUMN CONNECTIONS, SEE STANDARD DETAIL S-05-0102 TYPE II. FOR STEEL BEAM TO BEAM CONNECTIONS, SEE STANDARD DETAIL S-05-0102 TYPE I UNLESS NOTED OTHERWISE.
3. INDICATES LOCATION OF VERTICAL BRACE, SEE FRAMING ELEVATIONS.
4. ALL STRUCTURAL STEEL SHALL BE GALVANIZED.
5. ** DENOTES DIMENSIONS SHALL BE VERIFIED WITH EQUIPMENT MANUFACTURER.
6. METAL DECK SHALL BE 1.5 WR 20 GAGE. FASTENER PATTERN SHALL BE 36/5 5/8" PUDDLE WELDS W/ 2#10 SCREW SIDELAP FASTENERS PER SPAN EQUALLY SPACED. WHERE BEAM FLANGES ARE NOT PARALLEL TO METAL DECK, PROVIDE BENT PLATES WELDED TO BEAMS AND TO METAL DECK.



KEY PLAN

1/64" = 1'-0"

3/16" = 1'-0" 6 4 2 0 5'

WARNING
IT IS A VIOLATION OF SECTION 7209.2 OF THE NEW YORK STATE EDUCATION LAW FOR ANY PERSON, UNLESS ACTING UNDER THE DIRECTION OF A LICENSED PROFESSIONAL ENGINEER, TO ALTER IN ANY WAY PLANS, SPECIFICATIONS, PLATS OR REPORTS TO WHICH THE SEAL OF A PROFESSIONAL ENGINEER HAS BEEN APPLIED. IF AN ITEM BEARING THE SEAL OF A PROFESSIONAL ENGINEER IS ALTERED, THE ALTERING ENGINEER SHALL AFFIX TO THE ITEM HIS SEAL AND THE NOTATION "ALTERED BY" FOLLOWED BY HIS SIGNATURE, THE DATE, AND A SPECIFIC DESCRIPTION OF THE ALTERATION.

REV	ISSUED FOR	DATE	BY

PROJECT ENGINEER:	R. FROST
DESIGNED BY:	J. EDER
DRAWN BY:	R. HERNANDEZ
CHECKED BY:	C. PHILLIPS
IF THIS BAR DOES NOT MEASURE 1" THEN DRAWING IS NOT TO FULL SCALE	0 1/2" 1"

BID SET

STATE OF NEW YORK · JC EDER · 097035 · LICENSED PROFESSIONAL ENGINEER

Hazen
HAZEN AND SAWYER
498 SEVENTH AVENUE, 11th FLOOR
NEW YORK, NEW YORK 10018

WESTCHESTER JOINT WATER WORKS
MAMARONECK, NY

RYE LAKE WATER FILTRATION PLANT
HARRISON, NY

FILTRATION PLANT
STRUCTURAL
GABLE ROOF FRAMING PLAN - AREA 3

DATE:	FEB 2025
HAZEN NO.:	90388-000
CONTRACT NO.:	A1364-A
DRAWING NUMBER:	S-124

Autodesk Docs://90388-000_Rye_Lake_Filtration/90388-000-WFP-S.rvt
2/20/2025 10:59:50 AM

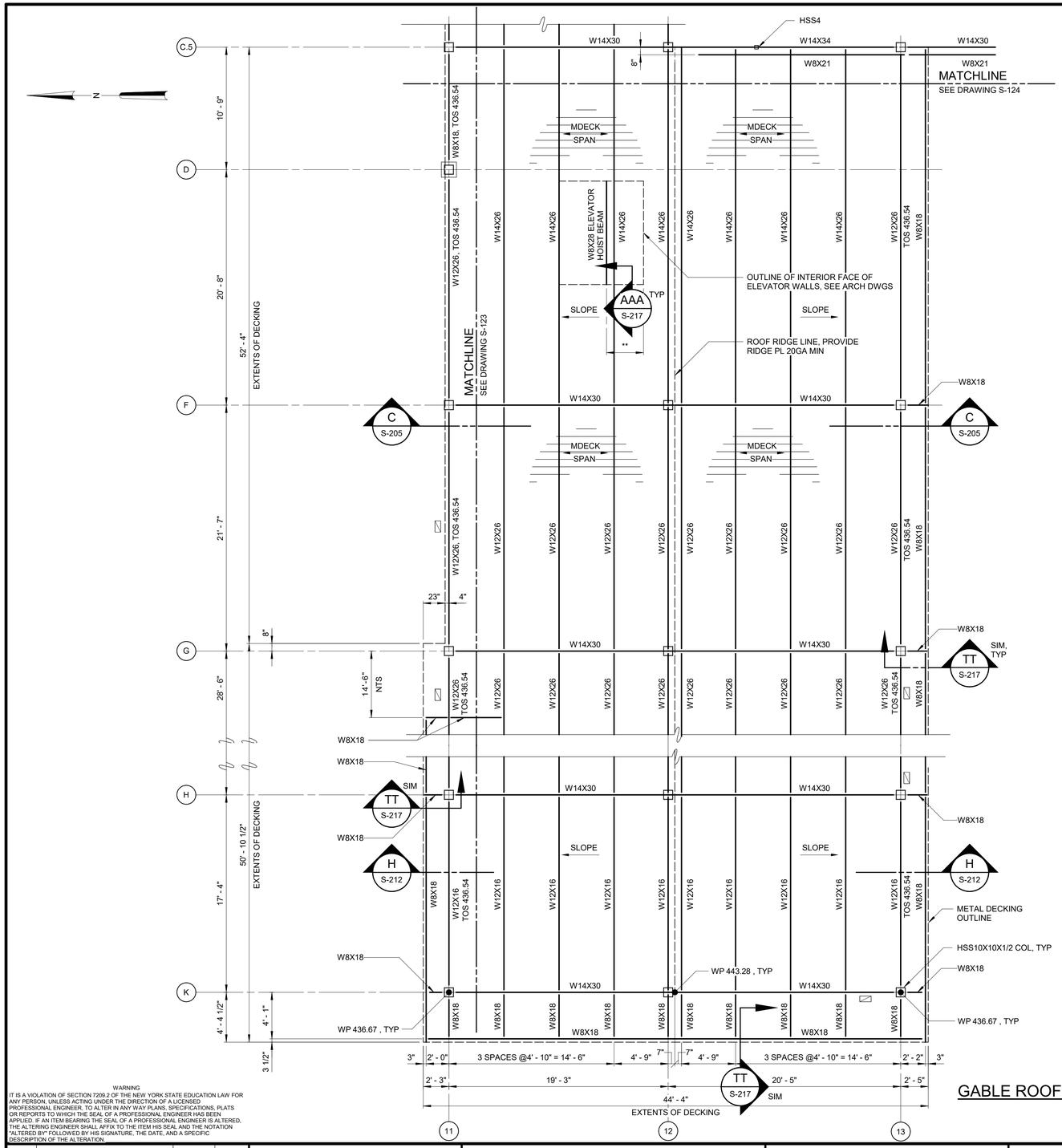

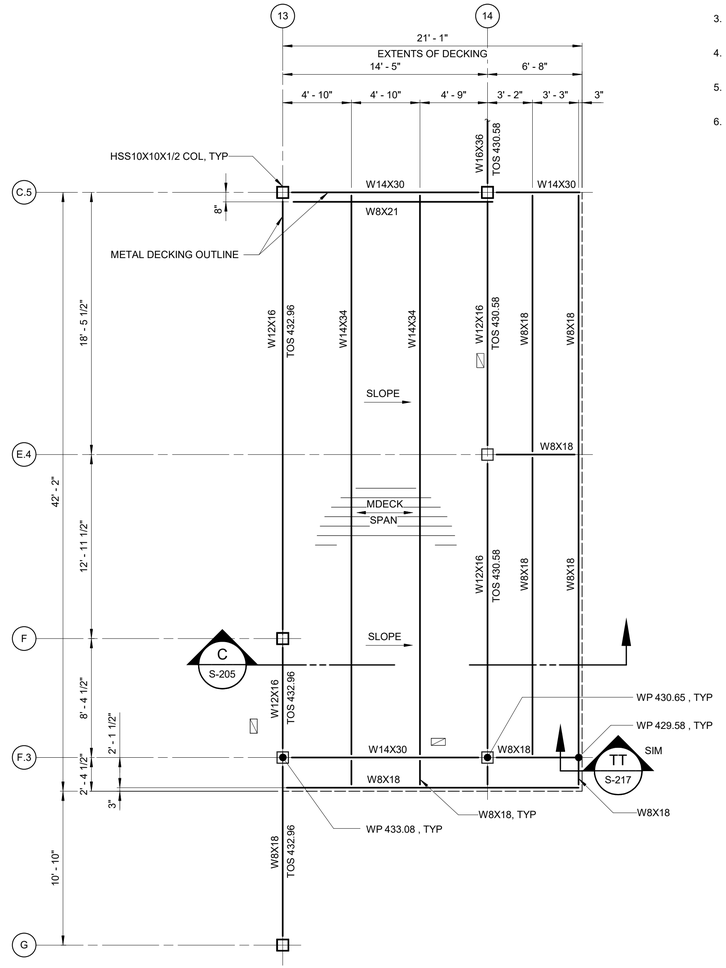

NOTES:

1. OVERALL FACILITY PLANS ARE SHOWN ON G-100 (EL 384.00), G-101 (EL 421.00), G-103 (ROOF).
2. FOR STEEL BEAM TO COLUMN CONNECTIONS, SEE STANDARD DETAIL S-05-0102 TYPE II. FOR STEEL BEAM TO BEAM CONNECTIONS, SEE STANDARD DETAIL S-05-0102 TYPE I UNLESS NOTED OTHERWISE.
3. ▨ INDICATES LOCATION OF VERTICAL BRACE, SEE FRAMING ELEVATIONS.
4. ALL STRUCTURAL STEEL THAT IS NOT ENCASED IN CONCRETE SHALL BE GALVANIZED.
5. ** DENOTES DIMENSIONS SHALL BE VERIFIED WITH EQUIPMENT MANUFACTURER.
6. METAL DECK SHALL BE 1.5 C 20 GAGE. FASTENER PATTERN SHALL BE 36/5 5/8" PUDDLE WELDS W/ 2#10 SCREW SIDELAP FASTENERS PER SPAN EQUALLY SPACED. WHERE BEAM FLANGES ARE NOT PARALLEL TO METAL DECK, PROVIDE BENT PLATES WELDED TO BEAMS AND TO METAL DECK.

GABLE ROOF FRAMING PLAN - AREA 6

3/16" = 1'-0"

LOW ROOF - AREA 6

3/16" = 1'-0"

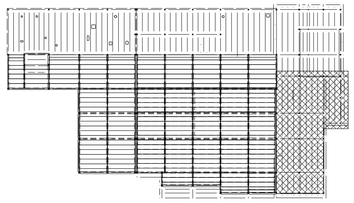

KEY PLAN

1/64" = 1'-0"

3/16" = 1'-0"

WARNING
IT IS A VIOLATION OF SECTION 7209.2 OF THE NEW YORK STATE EDUCATION LAW FOR ANY PERSON, UNLESS ACTING UNDER THE DIRECTION OF A LICENSED PROFESSIONAL ENGINEER, TO ALTER IN ANY WAY PLANS, SPECIFICATIONS, PLATS OR REPORTS TO WHICH THE SEAL OF A PROFESSIONAL ENGINEER HAS BEEN APPLIED. IF AN ITEM BEARING THE SEAL OF A PROFESSIONAL ENGINEER IS ALTERED, THE ALTERING ENGINEER SHALL AFFIX TO THE ITEM HIS SEAL AND THE NOTATION "ALTERED BY" FOLLOWED BY HIS SIGNATURE, THE DATE, AND A SPECIFIC DESCRIPTION OF THE ALTERATION.

REV	ISSUED FOR	DATE	BY

PROJECT ENGINEER:	R. FROST
DESIGNED BY:	J. EDER
DRAWN BY:	R. HERNANDEZ
CHECKED BY:	C. PHILLIPS

IF THIS BAR DOES NOT MEASURE 1" THEN DRAWING IS NOT TO FULL SCALE (0, 1/2", 1")

BID SET

STATE OF NEW YORK · JC EDER · 097035 · LICENSED PROFESSIONAL ENGINEER

Hazen
HAZEN AND SAWYER
498 SEVENTH AVENUE, 11th FLOOR
NEW YORK, NEW YORK 10018

WESTCHESTER JOINT WATER WORKS
MAMARONECK, NY

RYE LAKE WATER FILTRATION PLANT
HARRISON, NY

FILTRATION PLANT
STRUCTURAL
ROOF FRAMING PLANS - AREA 6

DATE:	FEB 2025
HAZEN NO.:	90388-000
CONTRACT NO.:	A1364-A
DRAWING NUMBER:	S-125

Autodesk Docs://90388-000_Rye_Lake_Filtration/90388-000-WFP-S.rvt
2/20/2025 10:59:53 AM

NOTES:

1. REFER TO SPECIFICATION 31 00 01 EARTHWORK.

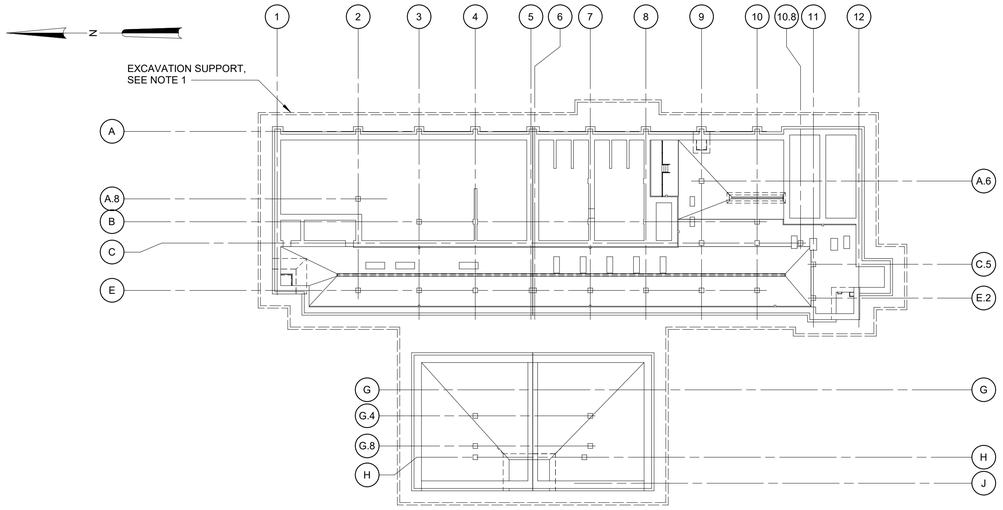

SUPPORT OF EXCAVATION PLAN AT EL 383.00

1/32" = 1'-0"

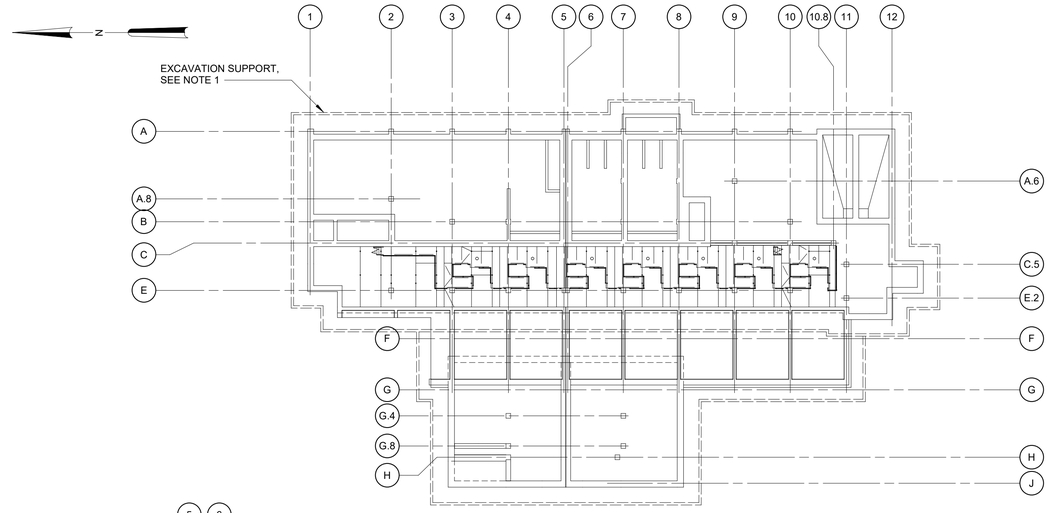

SUPPORT OF EXCAVATION PLAN AT EL 398.00

1/32" = 1'-0"

ENLARGED PLAN AT EL 396.00

1/4" = 1'-0"

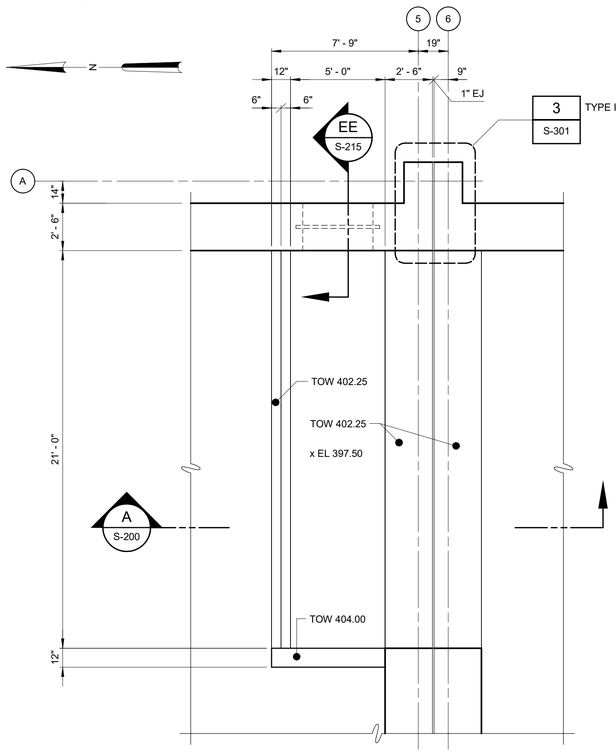

ENLARGED PLAN AT EL 397.50

1/4" = 1'-0"

1/32" = 1'-0" 32 16 0 32'

1/4" = 1'-0" 1 0 1 2 3 7'

WARNING
IT IS A VIOLATION OF SECTION 7209.2 OF THE NEW YORK STATE EDUCATION LAW FOR ANY PERSON, UNLESS ACTING UNDER THE DIRECTION OF A LICENSED PROFESSIONAL ENGINEER, TO ALTER IN ANY WAY PLANS, SPECIFICATIONS, PLATS OR REPORTS TO WHICH THE SEAL OF A PROFESSIONAL ENGINEER HAS BEEN APPLIED. IF AN ITEM BEARING THE SEAL OF A PROFESSIONAL ENGINEER IS ALTERED, THE ALTERING ENGINEER SHALL AFFIX TO THE ITEM HIS SEAL AND THE NOTATION "ALTERED BY" FOLLOWED BY HIS SIGNATURE, THE DATE, AND A SPECIFIC DESCRIPTION OF THE ALTERATION.

REV	ISSUED FOR	DATE	BY

PROJECT ENGINEER:	R. FROST
DESIGNED BY:	J. EDER
DRAWN BY:	R. HERNANDEZ
CHECKED BY:	C. PHILLIPS

IF THIS BAR DOES NOT MEASURE 1" THEN DRAWING IS NOT TO FULL SCALE 0 1/2" 1"

BID SET

STATE OF NEW YORK · JC EDER · 097035 · LICENSED PROFESSIONAL ENGINEER

Hazen

HAZEN AND SAWYER
498 SEVENTH AVENUE, 11th FLOOR
NEW YORK, NEW YORK 10018

WESTCHESTER JOINT WATER WORKS
MAMARONECK, NY

RYE LAKE WATER FILTRATION PLANT
HARRISON, NY

FILTRATION PLANT
STRUCTURAL
PLANS

DATE:	FEB 2025
HAZEN NO.:	90388-000
CONTRACT NO.:	A1364-A
DRAWING NUMBER:	S-126

Autodesk Docs://90388-000_Rye_Lake_Filtration/90388-000-WFP-S.rvt
2/20/2025 10:59:55 AM

NOTES:

1. ALL STRUCTURAL STEEL THAT IS NOT ENCASED IN CONCRETE SHALL BE GALVANIZED.
2. SOIL TIEDOWNS NOT SHOWN, SEE SOIL TIEDOWN PLANS.

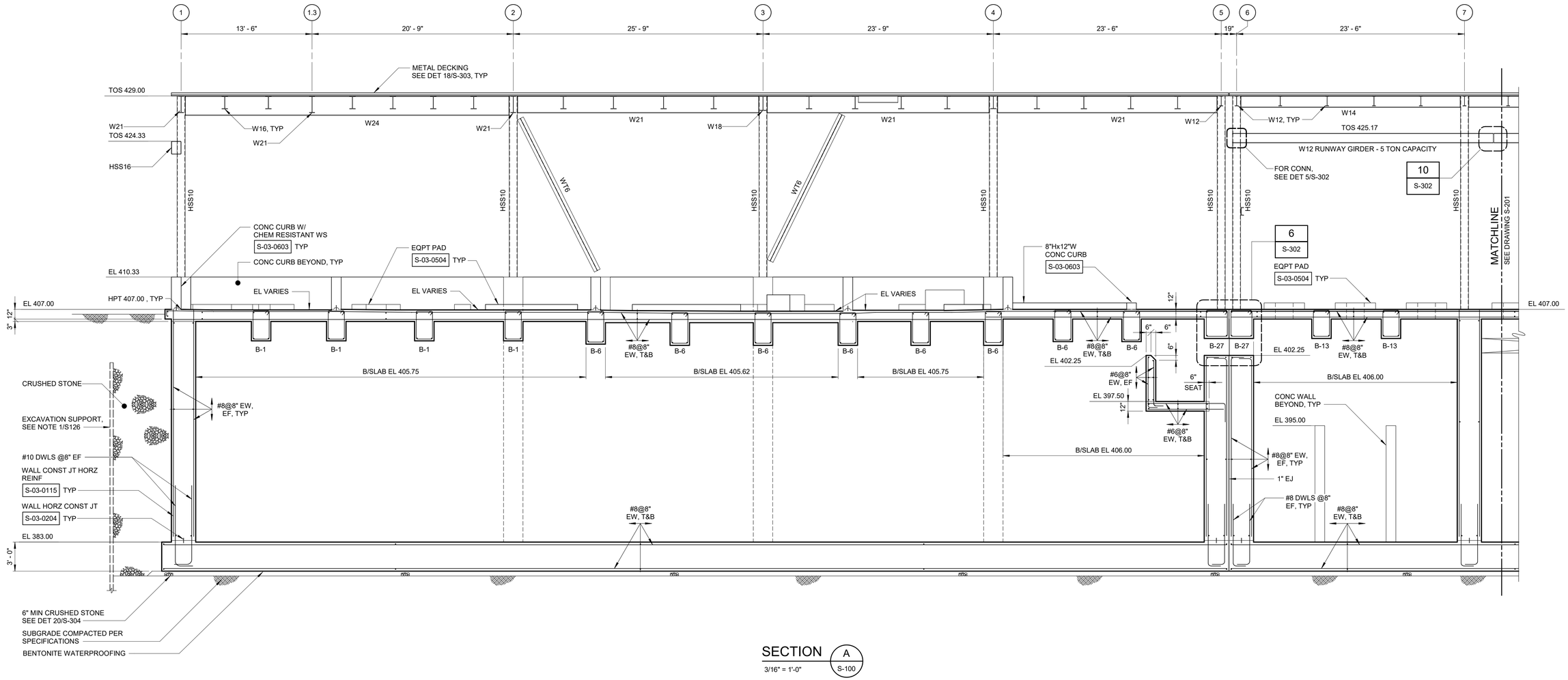

SECTION A S-100
3/16" = 1'-0"

3/16" = 1'-0" 6 4 2 0 5'

WARNING
IT IS A VIOLATION OF SECTION 7209.2 OF THE NEW YORK STATE EDUCATION LAW FOR ANY PERSON, UNLESS ACTING UNDER THE DIRECTION OF A LICENSED PROFESSIONAL ENGINEER, TO ALTER IN ANY WAY PLANS, SPECIFICATIONS, PLATS OR REPORTS TO WHICH THE SEAL OF A PROFESSIONAL ENGINEER HAS BEEN APPLIED. IF AN ITEM BEARING THE SEAL OF A PROFESSIONAL ENGINEER IS ALTERED, THE ALTERING ENGINEER SHALL AFFIX TO THE ITEM HIS SEAL AND THE NOTATION "ALTERED BY" FOLLOWED BY HIS SIGNATURE, THE DATE, AND A SPECIFIC DESCRIPTION OF THE ALTERATION.

REV	ISSUED FOR	DATE	BY

PROJECT ENGINEER:	R. FROST
DESIGNED BY:	J. EDER
DRAWN BY:	R. HERNANDEZ
CHECKED BY:	C. PHILLIPS

IF THIS BAR DOES NOT MEASURE 1" THEN DRAWING IS NOT TO FULL SCALE 0 1/2" 1"

BID SET

STATE OF NEW YORK · JC EDER · 097035 · LICENSED PROFESSIONAL ENGINEER

Hazen
HAZEN AND SAWYER
498 SEVENTH AVENUE, 11th FLOOR
NEW YORK, NEW YORK 10018

WESTCHESTER JOINT WATER WORKS
MAMARONECK, NY

RYE LAKE WATER FILTRATION PLANT
HARRISON, NY

FILTRATION PLANT
STRUCTURAL
SECTIONS - SHEET 1

DATE:	FEB 2025
HAZEN NO.:	90388-000
CONTRACT NO.:	A1364-A
DRAWING NUMBER:	S-200

Autodesk Docs://90388-000_Rye_Lake_Filtration/90388-000-WFP-S.rvt
2/20/2025 10:59:56 AM

NOTES:

1. ALL STRUCTURAL STEEL THAT IS NOT ENCASED IN CONCRETE SHALL BE GALVANIZED.
2. SOIL TIEDOWNS NOT SHOWN, SEE SOIL TIEDOWN PLANS.

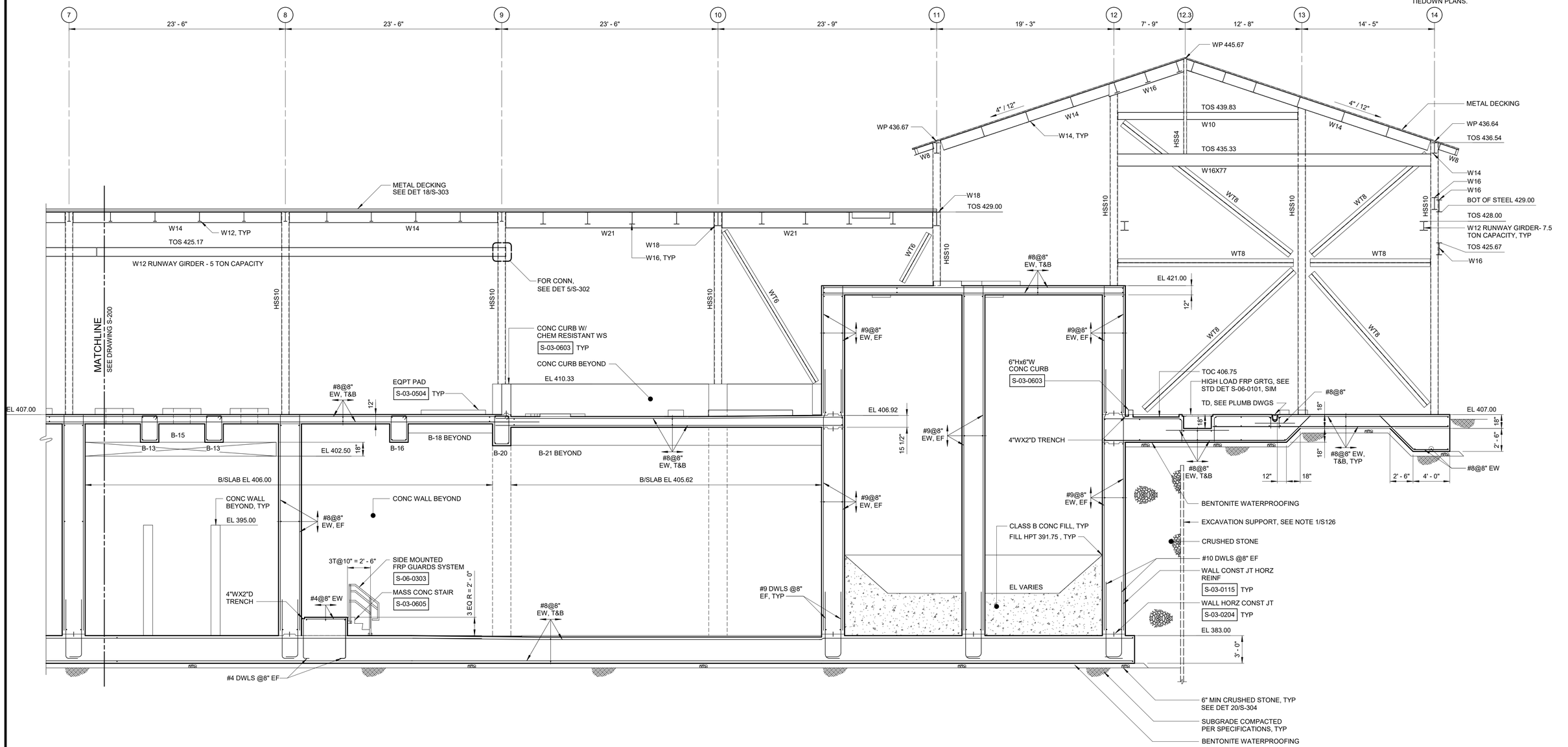

SECTION A / S-100

3/16" = 1'-0"

3/16" = 1'-0"

6 4 2 0 5'

WARNING
IT IS A VIOLATION OF SECTION 7209.2 OF THE NEW YORK STATE EDUCATION LAW FOR ANY PERSON, UNLESS ACTING UNDER THE DIRECTION OF A LICENSED PROFESSIONAL ENGINEER, TO ALTER IN ANY WAY PLANS, SPECIFICATIONS, PLATS OR REPORTS TO WHICH THE SEAL OF A PROFESSIONAL ENGINEER HAS BEEN APPLIED. IF AN ITEM BEARING THE SEAL OF A PROFESSIONAL ENGINEER IS ALTERED, THE ALTERING ENGINEER SHALL AFFIX TO THE ITEM HIS SEAL AND THE NOTATION "ALTERED BY" FOLLOWED BY HIS SIGNATURE, THE DATE, AND A SPECIFIC DESCRIPTION OF THE ALTERATION.

REV	ISSUED FOR	DATE	BY

PROJECT ENGINEER:	R. FROST
DESIGNED BY:	J. EDER
DRAWN BY:	R. HERNANDEZ
CHECKED BY:	C. PHILLIPS
IF THIS BAR DOES NOT MEASURE 1" THEN DRAWING IS NOT TO FULL SCALE	0 1/2" 1"

BID SET

STATE OF NEW YORK · JC EDER · 097035 · LICENSED PROFESSIONAL ENGINEER

Hazen
HAZEN AND SAWYER
498 SEVENTH AVENUE, 11th FLOOR
NEW YORK, NEW YORK 10018

WESTCHESTER JOINT WATER WORKS
MAMARONECK, NY

RYE LAKE WATER FILTRATION PLANT
HARRISON, NY

FILTRATION PLANT
STRUCTURAL
SECTIONS - SHEET 2

DATE:	FEB 2025
HAZEN NO.:	90388-000
CONTRACT NO.:	A1364-A
DRAWING NUMBER:	S-201

Autodesk Docs://90388-000_Rye_Lake_Filtration/90388-000-WFP-S.rvt
2/20/2025 10:59:57 AM

NOTES:

1. ALL STRUCTURAL STEEL THAT IS NOT ENCASED IN CONCRETE SHALL BE GALVANIZED.
2. SOIL TIEDOWNS NOT SHOWN, SEE SOIL TIEDOWN PLANS.
3. * DENOTES CONCRETE ENCASED FRAMING. FOR CONCRETE ENCASED BEAMS, SEE DETAIL 7/S-302 UNO. FOR CONCRETE ENCASED COLUMNS SEE DETAIL 12/S-302 UNLESS NOTED OTHERWISE.

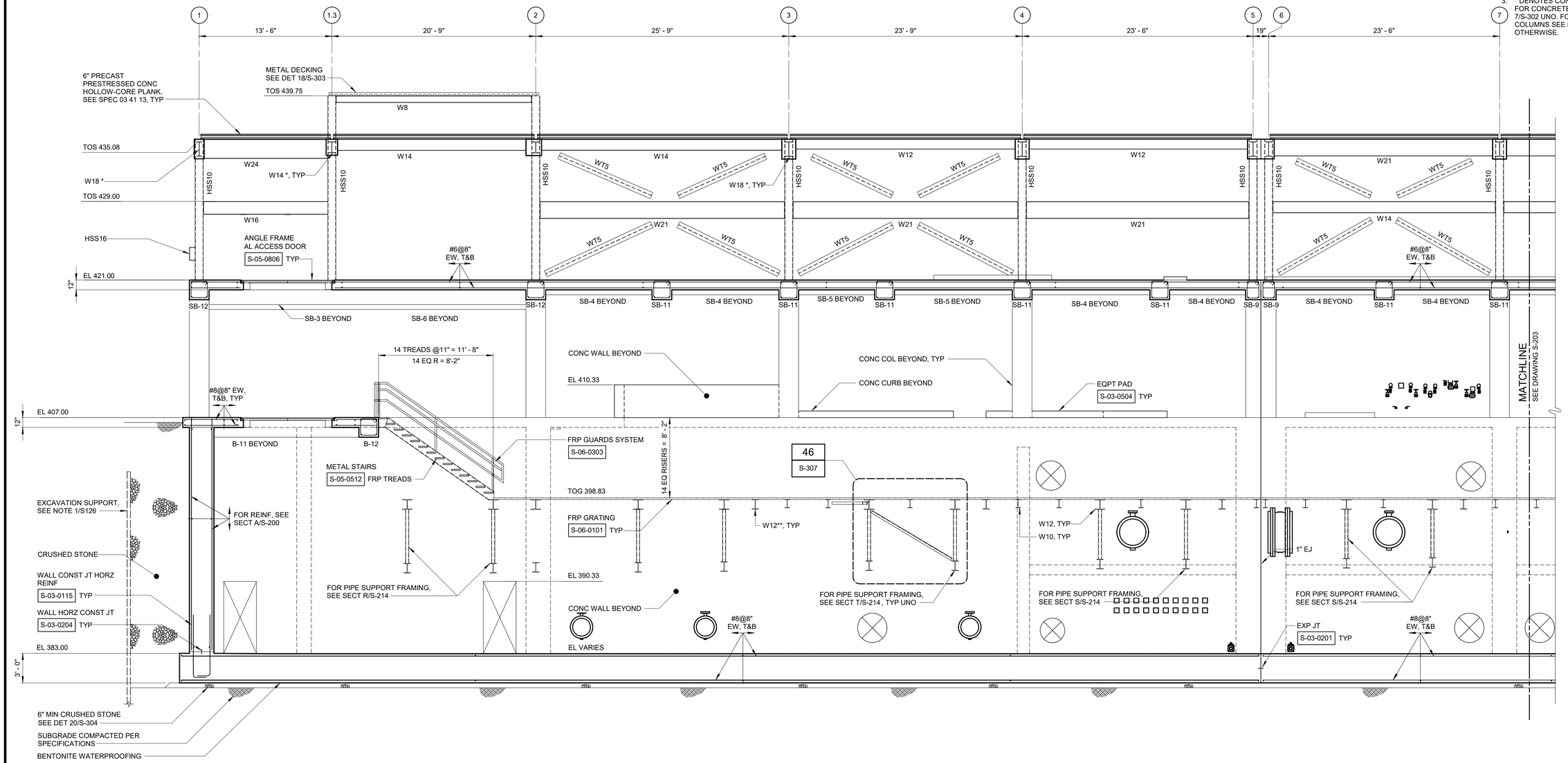

SECTION B / S-100
3/16" = 1'-0"

3/16" = 1'-0"

WARNING
IT IS A VIOLATION OF SECTION 7209.2 OF THE NEW YORK STATE EDUCATION LAW FOR ANY PERSON, UNLESS ACTING UNDER THE DIRECTION OF A LICENSED PROFESSIONAL ENGINEER, TO ALTER IN ANY WAY PLANS, SPECIFICATIONS, PLATS OR REPORTS TO WHICH THE SEAL OF A PROFESSIONAL ENGINEER HAS BEEN APPLIED. IF AN ITEM BEARING THE SEAL OF A PROFESSIONAL ENGINEER IS ALTERED, THE ALTERING ENGINEER SHALL AFFIX TO THE ITEM HIS SEAL AND THE NOTATION "ALTERED BY" FOLLOWED BY HIS SIGNATURE, THE DATE, AND A SPECIFIC DESCRIPTION OF THE ALTERATION.

REV	ISSUED FOR	DATE	BY

PROJECT ENGINEER:	R. FROST
DESIGNED BY:	J. EDER
DRAWN BY:	R. HERNANDEZ
CHECKED BY:	C. PHILLIPS

IF THIS BAR DOES NOT MEASURE 1" THEN DRAWING IS NOT TO FULL SCALE 0 1/2" 1"

BID SET

STATE OF NEW YORK · JC EDER · 097035 · LICENSED PROFESSIONAL ENGINEER

Hazen
HAZEN AND SAWYER
498 SEVENTH AVENUE, 11th FLOOR
NEW YORK, NEW YORK 10018

WESTCHESTER JOINT WATER WORKS
MAMARONECK, NY

RYE LAKE WATER FILTRATION PLANT
HARRISON, NY

FILTRATION PLANT
STRUCTURAL
SECTIONS - SHEET 3

DATE:	FEB 2025
HAZEN NO.:	90388-000
CONTRACT NO.:	A1364-A
DRAWING NUMBER:	S-202

Autodesk Docs://90388-000_Rye_Lake_Filtration/90388-000-WPP-S.rvt
2/20/2025 11:00:00 AM

NOTES:

1. ALL STRUCTURAL STEEL THAT IS NOT ENCASED IN CONCRETE SHALL BE GALVANIZED.
2. SOIL TIEDOWNS NOT SHOWN, SEE SOIL TIEDOWN PLANS.
3. * DENOTES CONCRETE ENCASED FRAMING. FOR CONCRETE ENCASED BEAMS, SEE DETAIL 7/S-302 UNO. FOR CONCRETE ENCASED COLUMNS SEE DETAIL 12/S-302 UNLESS NOTED OTHERWISE.

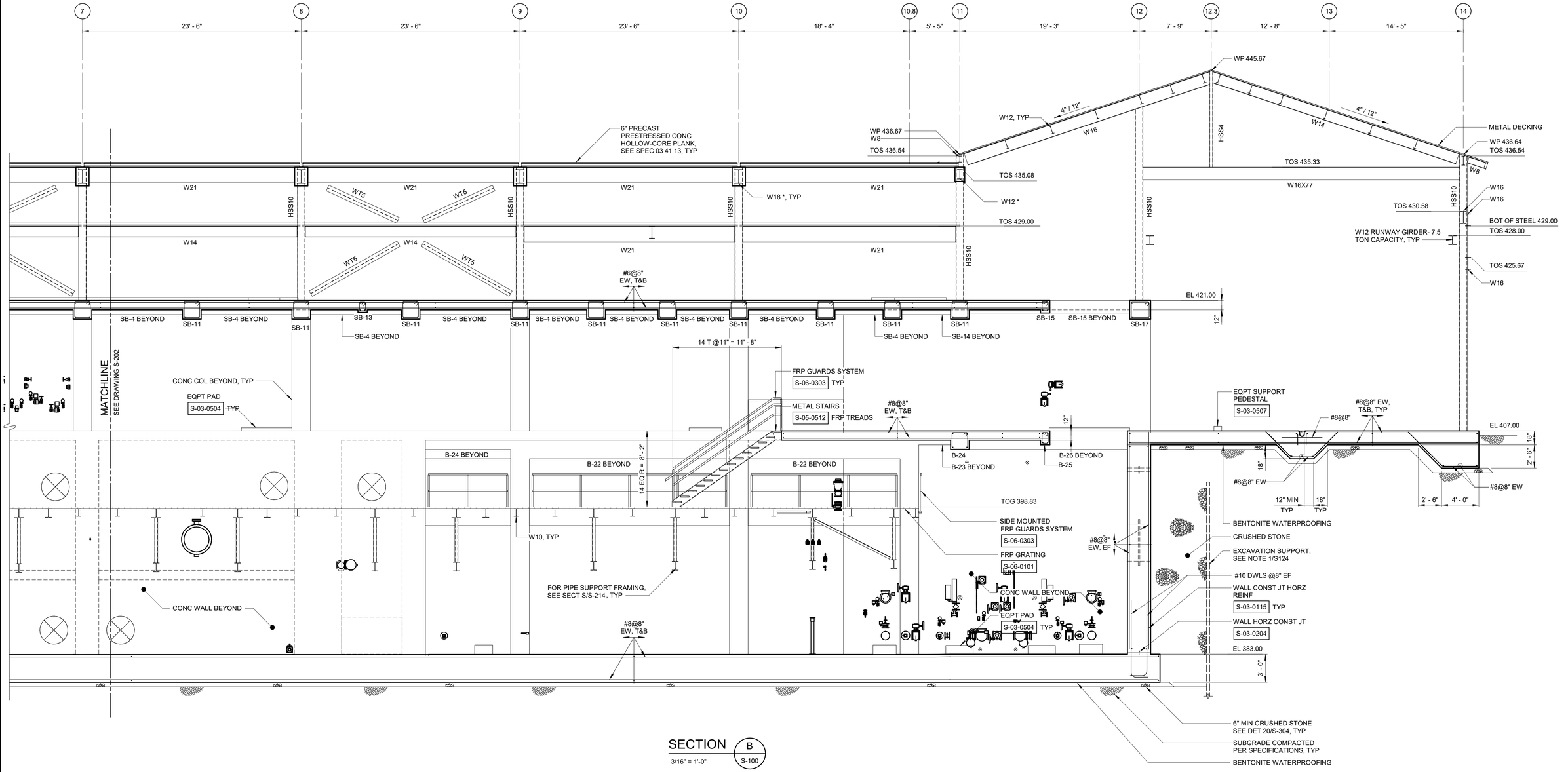

SECTION B S-100

3/16" = 1'-0"

3/16" = 1'-0" 6 4 2 0 5'

WARNING
IT IS A VIOLATION OF SECTION 7209.2 OF THE NEW YORK STATE EDUCATION LAW FOR ANY PERSON, UNLESS ACTING UNDER THE DIRECTION OF A LICENSED PROFESSIONAL ENGINEER, TO ALTER IN ANY WAY PLANS, SPECIFICATIONS, PLATS OR REPORTS TO WHICH THE SEAL OF A PROFESSIONAL ENGINEER HAS BEEN APPLIED. IF AN ITEM BEARING THE SEAL OF A PROFESSIONAL ENGINEER IS ALTERED, THE ALTERING ENGINEER SHALL AFFIX TO THE ITEM HIS SEAL AND THE NOTATION "ALTERED BY" FOLLOWED BY HIS SIGNATURE, THE DATE, AND A SPECIFIC DESCRIPTION OF THE ALTERATION.

REV	ISSUED FOR	DATE	BY

PROJECT ENGINEER:	R. FROST
DESIGNED BY:	J. EDER
DRAWN BY:	R. HERNANDEZ
CHECKED BY:	C. PHILLIPS

IF THIS BAR DOES NOT MEASURE 1" THEN DRAWING IS NOT TO FULL SCALE 0 1/2" 1"

BID SET

STATE OF NEW YORK · JC EDER · 097035 · LICENSED PROFESSIONAL ENGINEER

Hazen

HAZEN AND SAWYER
498 SEVENTH AVENUE, 11th FLOOR
NEW YORK, NEW YORK 10018

WESTCHESTER JOINT WATER WORKS
MAMARONECK, NY

RYE LAKE WATER FILTRATION PLANT
HARRISON, NY

FILTRATION PLANT
STRUCTURAL
SECTIONS - SHEET 4

DATE:	FEB 2025
HAZEN NO.:	90388-000
CONTRACT NO.:	A1364-A
DRAWING NUMBER:	S-203

Autodesk Docs://90388-000_Rye_Lake_Filtration/90388-000-WFP-S.rvt
2/20/2025 11:00:03 AM

NOTES:

1. SOIL TIEDOWNS NOT SHOWN, SEE SOIL TIEDOWN PLANS.
2. ALL STRUCTURAL STEEL THAT IS NOT ENCASED IN CONCRETE SHALL BE GALVANIZED.
3. * DENOTES CONCRETE ENCASED FRAMING. FOR CONCRETE ENCASED BEAMS, SEE DETAIL 7/S-302 UNO. FOR CONCRETE ENCASED COLUMNS SEE DETAIL 12/S-302 UNLESS NOTED OTHERWISE.

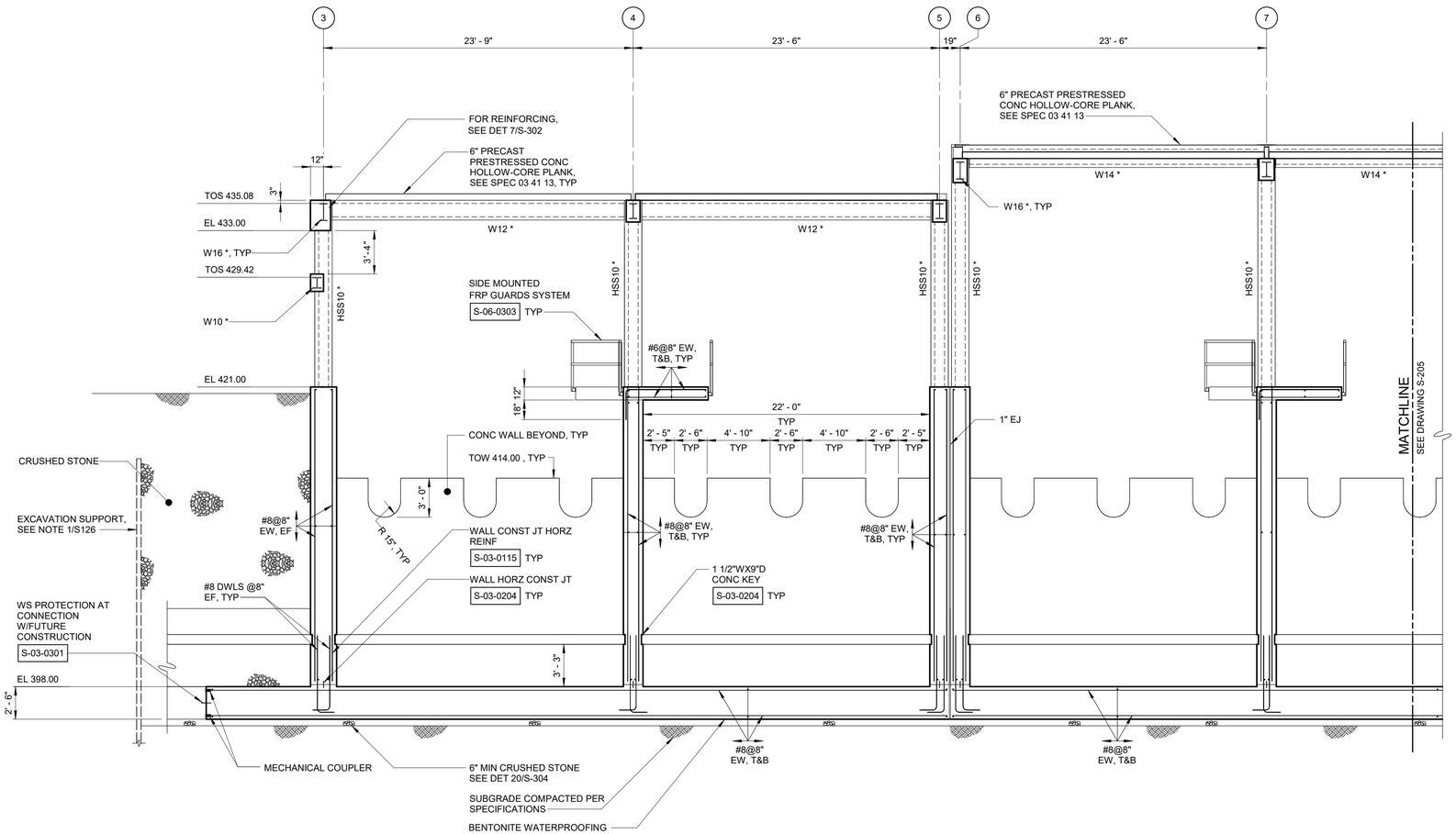

SECTION C

3/16" = 1'-0"

S-106

WARNING
IT IS A VIOLATION OF SECTION 7209.2 OF THE NEW YORK STATE EDUCATION LAW FOR ANY PERSON, UNLESS ACTING UNDER THE DIRECTION OF A LICENSED PROFESSIONAL ENGINEER, TO ALTER IN ANY WAY PLANS, SPECIFICATIONS, PLATS OR REPORTS TO WHICH THE SEAL OF A PROFESSIONAL ENGINEER HAS BEEN AFFIXED. IF AN ITEM BEARING THE SEAL OF A PROFESSIONAL ENGINEER IS ALTERED, THE ALTERING ENGINEER SHALL AFFIX TO THE ITEM HIS SEAL AND THE NOTATION "ALTERED BY" FOLLOWED BY HIS SIGNATURE, THE DATE, AND A SPECIFIC DESCRIPTION OF THE ALTERATION.

3/16" = 1'-0" 6 4 2 0 5'

REV	ISSUED FOR	DATE	BY

PROJECT ENGINEER:	R. FROST
DESIGNED BY:	J. EDER
DRAWN BY:	R. HERNANDEZ
CHECKED BY:	C. PHILLIPS
IF THIS BAR DOES NOT MEASURE 1" THEN DRAWING IS NOT TO FULL SCALE	0 1/2" 1"

BID SET

STATE OF NEW YORK · JC EDER · 097035 · LICENSED PROFESSIONAL ENGINEER

Hazen

HAZEN AND SAWYER
498 SEVENTH AVENUE, 11th FLOOR
NEW YORK, NEW YORK 10018

WESTCHESTER JOINT WATER WORKS
MAMARONECK, NY

RYE LAKE WATER FILTRATION PLANT
HARRISON, NY

FILTRATION PLANT
STRUCTURAL
SECTIONS - SHEET 5

DATE:	FEB 2025
HAZEN NO.:	90388-000
CONTRACT NO.:	A1364-A
DRAWING NUMBER:	S-204

Autodesk Docs://90388-000_Rye_Lake_Filtration/90388-000-WFP-S.rvt
2/20/2025 11:00:04 AM

NOTES:

1. ALL STRUCTURAL STEEL THAT IS NOT ENCASED IN CONCRETE SHALL BE GALVANIZED.
2. SOIL TIEDOWNS NOT SHOWN, SEE SOIL TIEDOWN PLANS.
3. * DENOTES CONCRETE ENCASED FRAMING. FOR CONCRETE ENCASED BEAMS, SEE DETAIL 7/S-302 UNO. FOR CONCRETE ENCASED COLUMNS SEE DETAIL 12/S-302 UNLESS NOTED OTHERWISE.

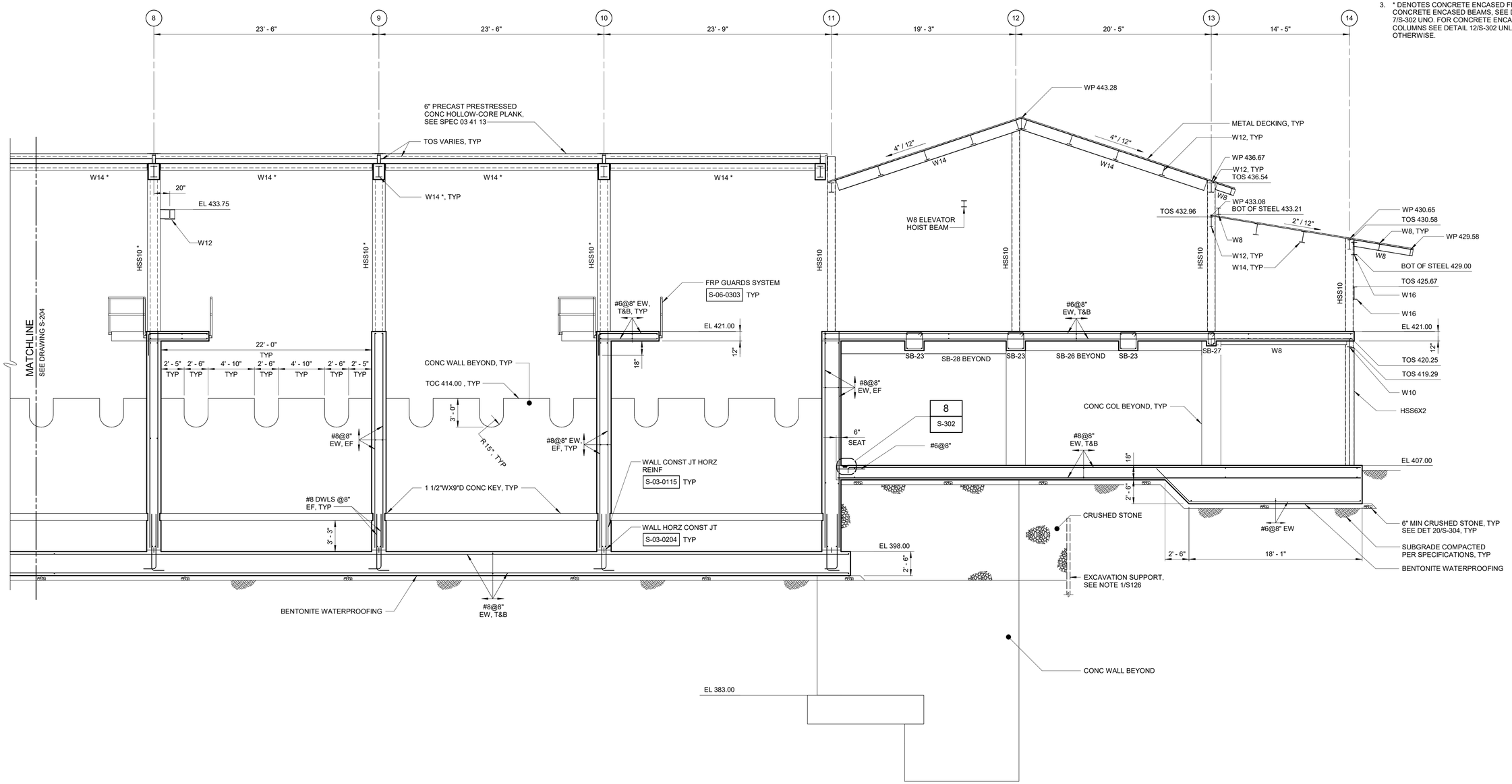

SECTION C / S-106
3/16" = 1'-0"

3/16" = 1'-0" (6 4 2 0 5')

WARNING
IT IS A VIOLATION OF SECTION 7209.2 OF THE NEW YORK STATE EDUCATION LAW FOR ANY PERSON, UNLESS ACTING UNDER THE DIRECTION OF A LICENSED PROFESSIONAL ENGINEER, TO ALTER IN ANY WAY PLANS, SPECIFICATIONS, PLATS OR REPORTS TO WHICH THE SEAL OF A PROFESSIONAL ENGINEER HAS BEEN APPLIED. IF AN ITEM BEARING THE SEAL OF A PROFESSIONAL ENGINEER IS ALTERED, THE ALTERING ENGINEER SHALL AFFIX TO THE ITEM HIS SEAL AND THE NOTATION "ALTERED BY" FOLLOWED BY HIS SIGNATURE, THE DATE, AND A SPECIFIC DESCRIPTION OF THE ALTERATION.

REV	ISSUED FOR	DATE	BY

PROJECT ENGINEER:	R. FROST
DESIGNED BY:	J. EDER
DRAWN BY:	R. HERNANDEZ
CHECKED BY:	C. PHILLIPS
IF THIS BAR DOES NOT MEASURE 1" THEN DRAWING IS NOT TO FULL SCALE	0 1/2" 1"

BID SET

STATE OF NEW YORK · JC EDER · 097035 · LICENSED PROFESSIONAL ENGINEER

Hazen
HAZEN AND SAWYER
498 SEVENTH AVENUE, 11th FLOOR
NEW YORK, NEW YORK 10018

WESTCHESTER JOINT WATER WORKS
MAMARONECK, NY

RYE LAKE WATER FILTRATION PLANT
HARRISON, NY

FILTRATION PLANT
STRUCTURAL
SECTIONS - SHEET 6

DATE:	FEB 2025
HAZEN NO.:	90388-000
CONTRACT NO.:	A1364-A
DRAWING NUMBER:	S-205

Autodesk Docs://90388-000_Rye_Lake_Filtration/90388-000-WFP-S.rvt
2/20/2025 11:00:05 AM

NOTES:

1. ALL STRUCTURAL STEEL THAT IS NOT ENCASED IN CONCRETE SHALL BE GALVANIZED.
2. SOIL TIEDOWNS NOT SHOWN, SEE SOIL TIEDOWN PLANS.
3. * DENOTES CONCRETE ENCASED FRAMING. FOR CONCRETE ENCASED BEAMS, SEE DETAIL 7/S-302 UNO. FOR CONCRETE ENCASED COLUMNS SEE DETAIL 12/S-302 UNLESS NOTED OTHERWISE.

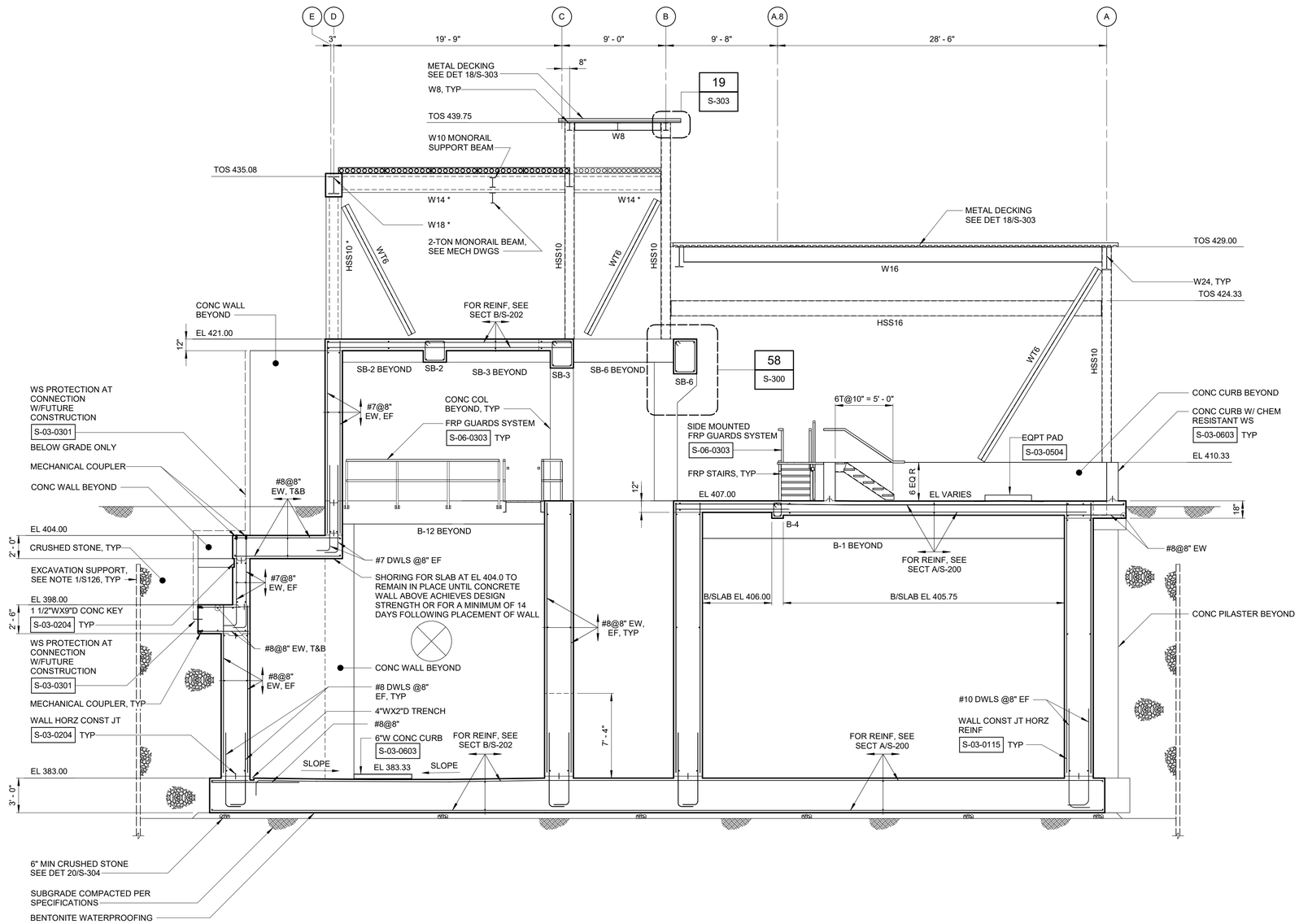

SECTION D
3/16" = 1'-0"
S-100

3/16" = 1'-0"

WARNING
IT IS A VIOLATION OF SECTION 7209.2 OF THE NEW YORK STATE EDUCATION LAW FOR ANY PERSON, UNLESS ACTING UNDER THE DIRECTION OF A LICENSED PROFESSIONAL ENGINEER, TO ALTER IN ANY WAY PLANS, SPECIFICATIONS, PLATS OR REPORTS TO WHICH THE SEAL OF A PROFESSIONAL ENGINEER HAS BEEN APPLIED. IF AN ITEM BEARING THE SEAL OF A PROFESSIONAL ENGINEER IS ALTERED, THE ALTERING ENGINEER SHALL AFFIX TO THE ITEM HIS SEAL AND THE NOTATION "ALTERED BY" FOLLOWED BY HIS SIGNATURE, THE DATE, AND A SPECIFIC DESCRIPTION OF THE ALTERATION.

REV	ISSUED FOR	DATE	BY

PROJECT ENGINEER:	R. FROST
DESIGNED BY:	J. EDER
DRAWN BY:	R. HERNANDEZ
CHECKED BY:	C. PHILLIPS

IF THIS BAR DOES NOT MEASURE 1" THEN DRAWING IS NOT TO FULL SCALE 0 1/2" 1"

BID SET

STATE OF NEW YORK · JC EDER · 097035 · LICENSED PROFESSIONAL ENGINEER

Hazen
HAZEN AND SAWYER
498 SEVENTH AVENUE, 11th FLOOR
NEW YORK, NEW YORK 10018

WESTCHESTER JOINT WATER WORKS
MAMARONECK, NY

RYE LAKE WATER FILTRATION PLANT
HARRISON, NY

FILTRATION PLANT
STRUCTURAL
SECTIONS - SHEET 7

DATE:	FEB 2025
HAZEN NO.:	90388-000
CONTRACT NO.:	A1364-A
DRAWING NUMBER:	S-206

Autodesk Docs://90388-000_Rye_Lake_Filtration/90388-000-WFP-S.rvt
2/20/2025 11:00:07 AM

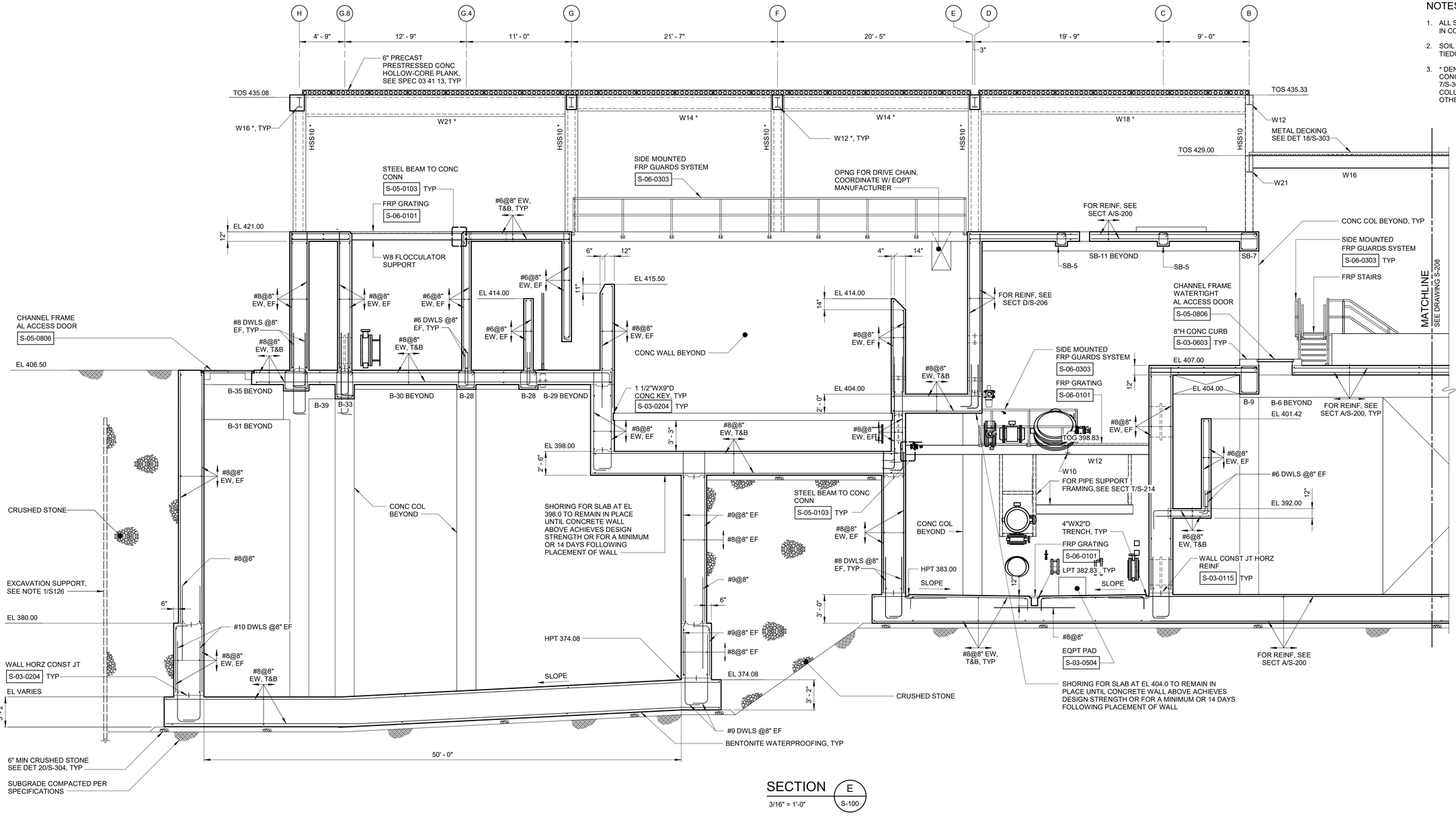
H
G.8
G.4
G
F
E
D
C
B
4' - 9"
12' - 9"
11' - 0"
21' - 7"
20' - 5"
3"
19' - 9"
9' - 0"
6" PRECAST PRESTRESSED CONC HOLLOW-CORE PLANK, SEE SPEC 03 41 13, TYP
TOS 435.08
TOS 435.33
W16 *, TYP
W21 *
W14 *
W14 *
W18 *
W12
HSS10 *
HSS10 *
HSS10 *
HSS10 *
W12 *, TYP
METAL DECKING SEE DET 18/S-303
TOS 429.00
W21
W16
STEEL BEAM TO CONC CONN
S-05-0103 TYP
FRP GRATING
S-06-0101
SIDE MOUNTED FRP GUARDS SYSTEM
S-06-0303
OPNG FOR DRIVE CHAIN, COORDINATE W/ EQPT MANUFACTURER
#6@8" EW, T&B, TYP
FOR REINF, SEE SECT A/S-200
CONC COL BEYOND, TYP
SIDE MOUNTED FRP GUARDS SYSTEM
S-06-0303 TYP
FRP STAIRS
EL 421.00
12"
W8 FLOCCULATOR SUPPORT
SB-11 BEYOND
SB-5
SB-5
SB-7
6"
12"
4"
14"
EL 415.50
11"
EL 414.00
EL 414.00
14"
#8@8" EW, EF
#6@8" EW, EF
#8@8" EW, EF
#6@8" EW, EF
#8@8" EW, EF
#8@8" EW, T&B
#6@8" EW, EF
#8@8" EW, EF
#8@8" EW, T&B
#8@8" EW, EF
#8@8" EW, T&B
#8@8" EW, EF
#8@8" EW, EF
#8@8" EW, T&B
#8@8" EW, EF
#8@8" EW, EF
#8@8" EW, EF

NOTES:

1. ALL STRUCTURAL STEEL THAT IS NOT ENCASED IN CONCRETE SHALL BE GALVANIZED.
2. SOIL TIEDOWNS NOT SHOWN, SEE SOIL TIEDOWN PLANS.
3. * DENOTES CONCRETE ENCASED FRAMING. FOR CONCRETE ENCASED BEAMS, SEE DETAIL 7/S-302 UNO. FOR CONCRETE ENCASED COLUMNS SEE DETAIL 12/S-302 UNLESS NOTED OTHERWISE.

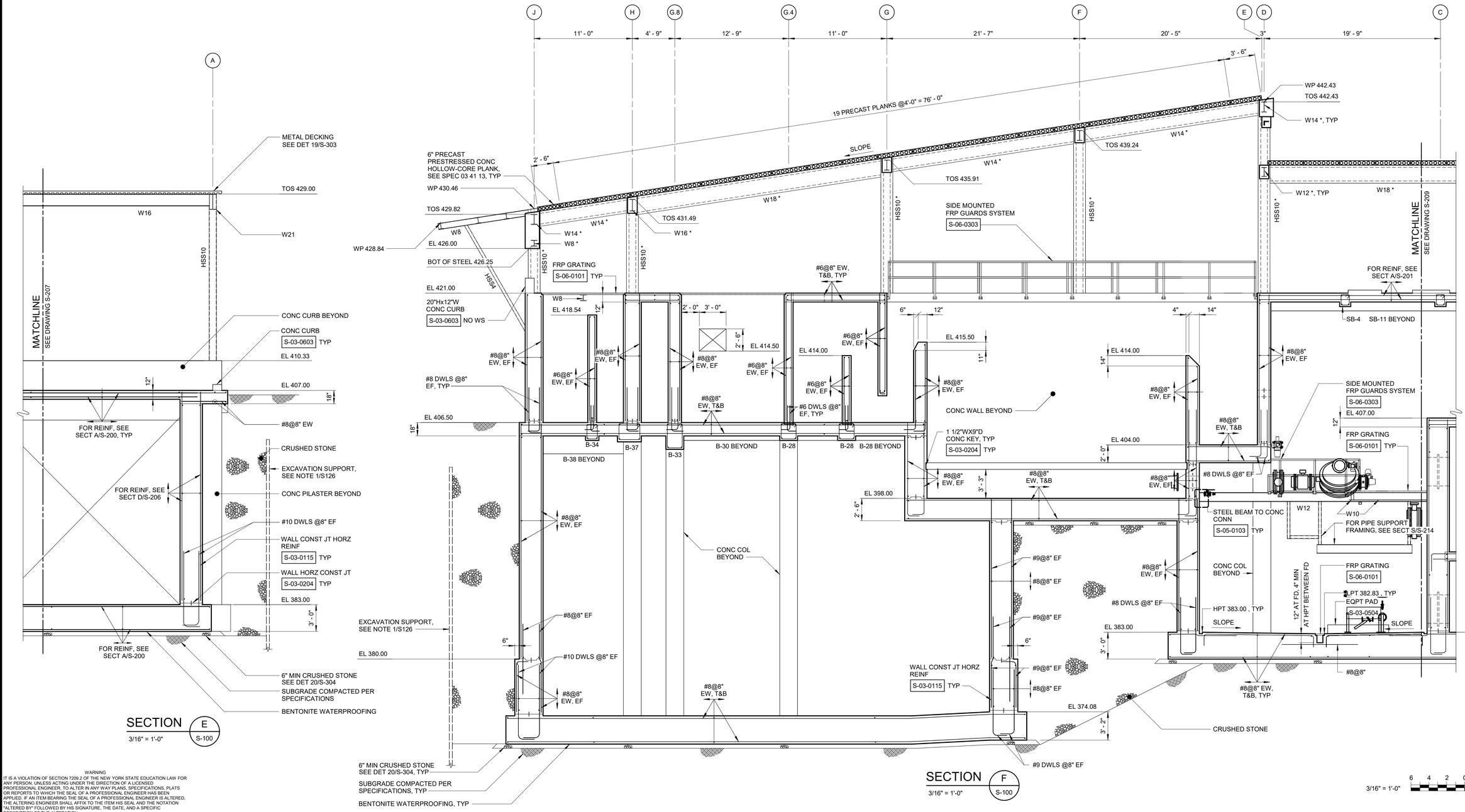

SECTION E
3/16" = 1'-0"
S-100

SECTION F
3/16" = 1'-0"
S-100

3/16" = 1'-0"
6 4 2 0 5'

WARNING
IT IS A VIOLATION OF SECTION 7209.2 OF THE NEW YORK STATE EDUCATION LAW FOR ANY PERSON, UNLESS ACTING UNDER THE DIRECTION OF A LICENSED PROFESSIONAL ENGINEER, TO ALTER IN ANY WAY PLANS, SPECIFICATIONS, PLATS OR REPORTS TO WHICH THE SEAL OF A PROFESSIONAL ENGINEER HAS BEEN APPLIED. IF AN ITEM BEARING THE SEAL OF A PROFESSIONAL ENGINEER IS ALTERED, THE ALTERING ENGINEER SHALL AFFIX TO THE ITEM HIS SEAL AND THE NOTATION "ALTERED BY" FOLLOWED BY HIS SIGNATURE, THE DATE, AND A SPECIFIC DESCRIPTION OF THE ALTERATION.

REV	ISSUED FOR	DATE	BY

PROJECT ENGINEER:	R. FROST
DESIGNED BY:	J. EDER
DRAWN BY:	R. HERNANDEZ
CHECKED BY:	C. PHILLIPS

IF THIS BAR DOES NOT MEASURE 1" THEN DRAWING IS NOT TO FULL SCALE 0 1/2" 1"

BID SET

STATE OF NEW YORK · JC EDER · 097035 · LICENSED PROFESSIONAL ENGINEER

Hazen
HAZEN AND SAWYER
498 SEVENTH AVENUE, 11th FLOOR
NEW YORK, NEW YORK 10018

WESTCHESTER JOINT WATER WORKS
MAMARONECK, NY

RYE LAKE WATER FILTRATION PLANT
HARRISON, NY

FILTRATION PLANT
STRUCTURAL
SECTIONS - SHEET 9

DATE:	FEB 2025
HAZEN NO.:	90388-000
CONTRACT NO.:	A1364-A
DRAWING NUMBER:	S-208

Autodesk Docs://90388-000_Rye_Lake_Filtration/90388-000-WFP-S.rvt
2/20/2025 11:00:12 AM

NOTES:

1. ALL STRUCTURAL STEEL THAT IS NOT ENCASED IN CONCRETE SHALL BE GALVANIZED.
2. SOIL TIEDOWNS NOT SHOWN, SEE SOIL TIEDOWN PLANS.
3. * DENOTES CONCRETE ENCASED FRAMING. FOR CONCRETE ENCASED BEAMS, SEE DETAIL 7/S-302 UNO. FOR CONCRETE ENCASED COLUMNS SEE DETAIL 12/S-302 UNLESS NOTED OTHERWISE.

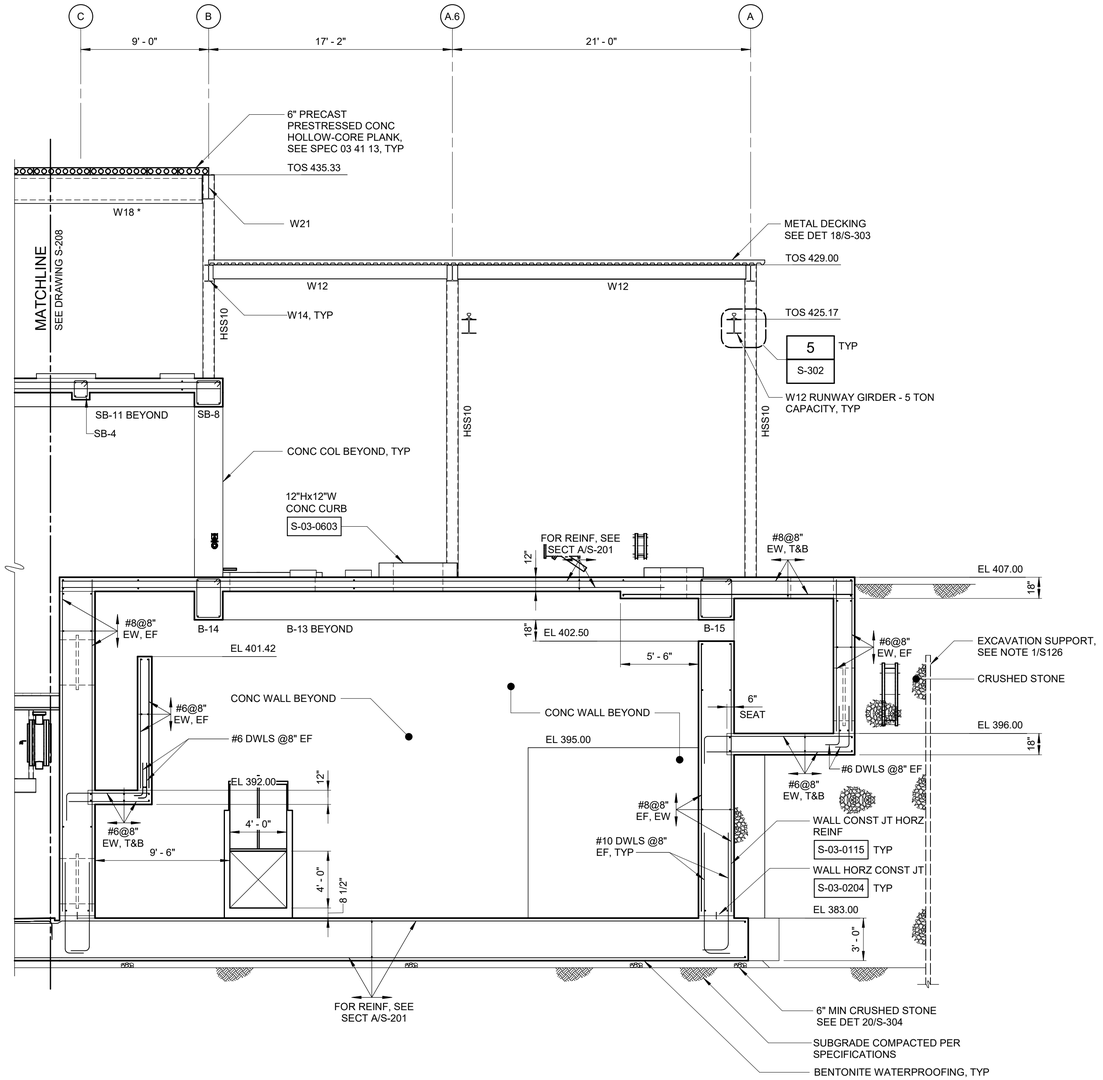

SECTION F
3/16" = 1'-0"
S-100

3/16" = 1'-0"

WARNING
IT IS A VIOLATION OF SECTION 7209.2 OF THE NEW YORK STATE EDUCATION LAW FOR ANY PERSON, UNLESS ACTING UNDER THE DIRECTION OF A LICENSED PROFESSIONAL ENGINEER, TO ALTER IN ANY WAY PLANS, SPECIFICATIONS, PLATS OR REPORTS TO WHICH THE SEAL OF A PROFESSIONAL ENGINEER HAS BEEN APPLIED. IF AN ITEM BEARING THE SEAL OF A PROFESSIONAL ENGINEER IS ALTERED, THE ALTERING ENGINEER SHALL AFFIX TO THE ITEM HIS SEAL AND THE NOTATION "ALTERED BY" FOLLOWED BY HIS SIGNATURE, THE DATE, AND A SPECIFIC DESCRIPTION OF THE ALTERATION.

REV	ISSUED FOR	DATE	BY

PROJECT ENGINEER:	R. FROST
DESIGNED BY:	J. EDER
DRAWN BY:	R. HERNANDEZ
CHECKED BY:	C. PHILLIPS
IF THIS BAR DOES NOT MEASURE 1" THEN DRAWING IS NOT TO FULL SCALE	0 1/2" 1"

BID SET

STATE OF NEW YORK · JC EDER · 097035 · LICENSED PROFESSIONAL ENGINEER

Hazen
HAZEN AND SAWYER
498 SEVENTH AVENUE, 11th FLOOR
NEW YORK, NEW YORK 10018

WESTCHESTER JOINT WATER WORKS
MAMARONECK, NY

RYE LAKE WATER FILTRATION PLANT
HARRISON, NY

FILTRATION PLANT
STRUCTURAL
SECTIONS - SHEET 10

DATE:	FEB 2025
HAZEN NO.:	90388-000
CONTRACT NO.:	A1364-A
DRAWING NUMBER:	S-209

Autodesk Docs://90388-000_Rye_Lake_Filtration/90388-000-WFP-S.rvt
2/20/2025 11:00:13 AM

NOTES:

1. ALL STRUCTURAL STEEL THAT IS NOT ENCASED IN CONCRETE SHALL BE GALVANIZED.
2. SOIL TIEDOWNS NOT SHOWN, SEE SOIL TIEDOWN PLANS.
3. * DENOTES CONCRETE ENCASED FRAMING. FOR CONCRETE ENCASED BEAMS, SEE DETAIL 7/S-302 UNO. FOR CONCRETE ENCASED COLUMNS SEE DETAIL 12/S-302 UNLESS NOTED OTHERWISE.

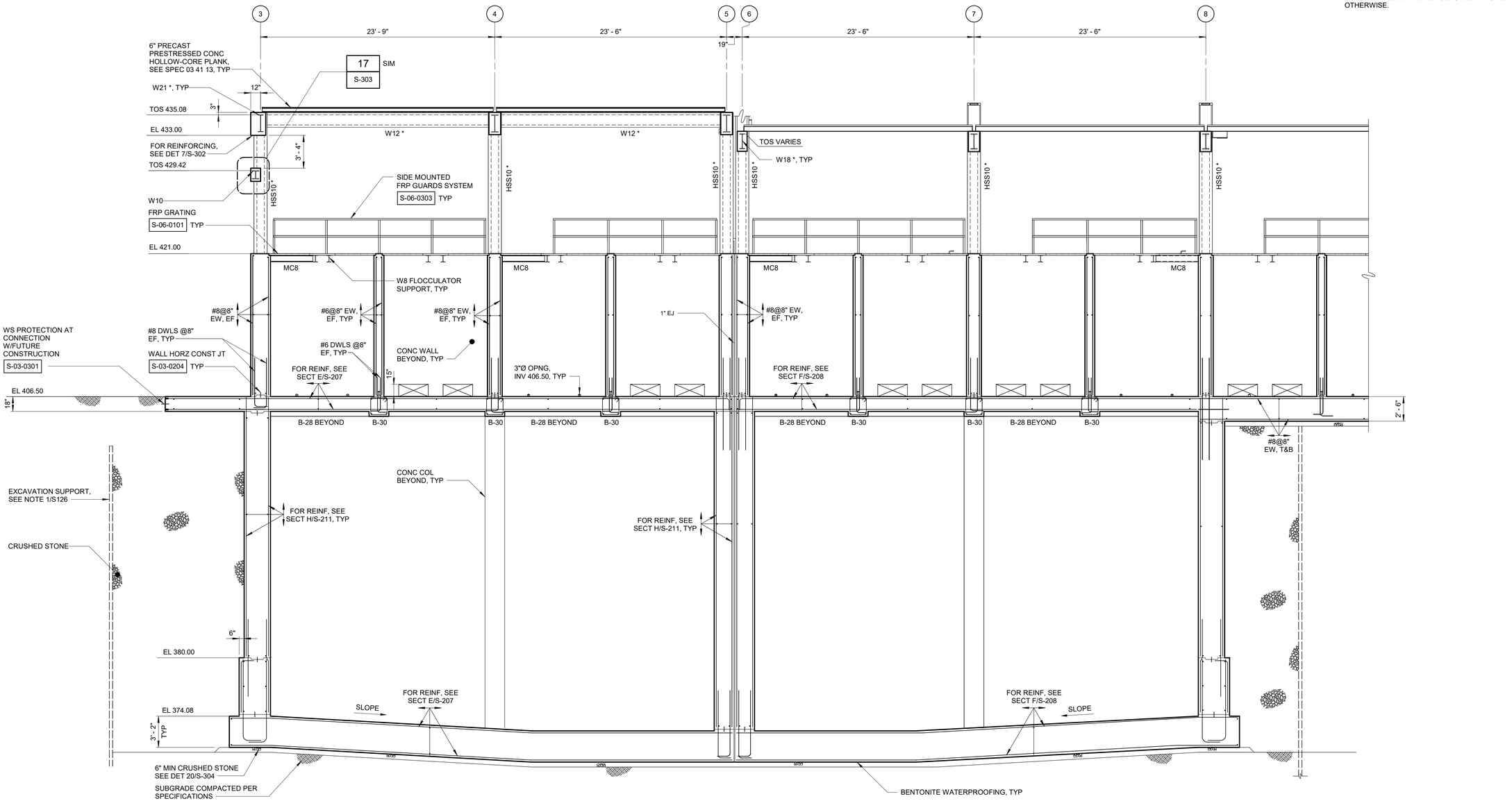

SECTION G / S-111
3/16" = 1'-0"

3/16" = 1'-0" (6 4 2 0 5')

WARNING
IT IS A VIOLATION OF SECTION 7209.2 OF THE NEW YORK STATE EDUCATION LAW FOR ANY PERSON, UNLESS ACTING UNDER THE DIRECTION OF A LICENSED PROFESSIONAL ENGINEER, TO ALTER IN ANY WAY PLANS, SPECIFICATIONS, PLATS OR REPORTS TO WHICH THE SEAL OF A PROFESSIONAL ENGINEER HAS BEEN APPLIED. IF AN ITEM BEARING THE SEAL OF A PROFESSIONAL ENGINEER IS ALTERED, THE ALTERING ENGINEER SHALL AFFIX TO THE ITEM HIS SEAL AND THE NOTATION "ALTERED BY" FOLLOWED BY HIS SIGNATURE, THE DATE, AND A SPECIFIC DESCRIPTION OF THE ALTERATION.

REV	ISSUED FOR	DATE	BY

PROJECT ENGINEER:	R. FROST
DESIGNED BY:	J. EDER
DRAWN BY:	R. HERNANDEZ
CHECKED BY:	C. PHILLIPS

IF THIS BAR DOES NOT MEASURE 1" THEN DRAWING IS NOT TO FULL SCALE (0 1/2" 1")

BID SET

STATE OF NEW YORK · JC EDER · 097035 · LICENSED PROFESSIONAL ENGINEER

Hazen
HAZEN AND SAWYER
498 SEVENTH AVENUE, 11th FLOOR
NEW YORK, NEW YORK 10018

WESTCHESTER JOINT WATER WORKS
MAMARONECK, NY

RYE LAKE WATER FILTRATION PLANT
HARRISON, NY

FILTRATION PLANT
STRUCTURAL
SECTIONS - SHEET 11

DATE:	FEB 2025
HAZEN NO.:	90388-000
CONTRACT NO.:	A1364-A
DRAWING NUMBER:	S-210

Autodesk Docs://90388-000_Rye_Lake_Filtration/90388-000-WFP-S.rvt
2/20/2025 11:00:15 AM

NOTES:

1. ALL STRUCTURAL STEEL THAT IS NOT ENCASED IN CONCRETE SHALL BE GALVANIZED.
2. SOIL TIEDOWNS NOT SHOWN, SEE SOIL TIEDOWN PLANS.
3. SHORING FOR SLAB AT EL 402.83 SHALL REMAIN IN PLACE UNTIL CONCRETE SLAB AT EL 406.50 ACHIEVES DESIGN STRENGTH OR FOR A MINIMUM OF 14 DAYS FOLLOWING PLACEMENT OF SLAB AT EL 406.50.
4. * DENOTES CONCRETE ENCASED FRAMING. FOR CONCRETE ENCASED BEAMS, SEE DETAIL 7/S-302 UNO. FOR CONCRETE ENCASED COLUMNS SEE DETAIL 12/S-302 UNLESS NOTED OTHERWISE.

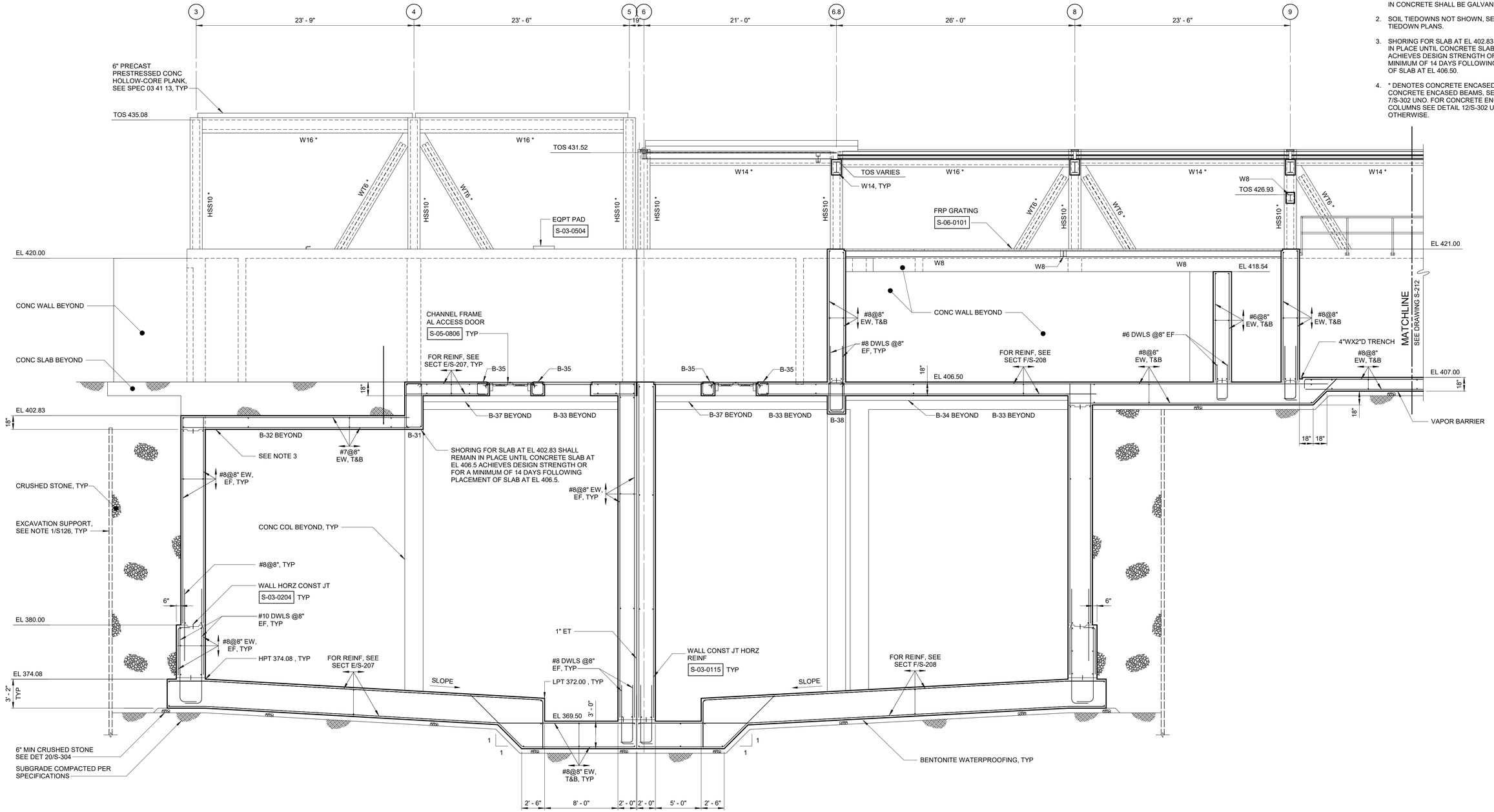

SECTION H
3/16" = 1'-0"
S-101

3/16" = 1'-0"
6 4 2 0 5'

WARNING
IT IS A VIOLATION OF SECTION 7209.2 OF THE NEW YORK STATE EDUCATION LAW FOR ANY PERSON, UNLESS ACTING UNDER THE DIRECTION OF A LICENSED PROFESSIONAL ENGINEER, TO ALTER IN ANY WAY PLANS, SPECIFICATIONS, PLATS OR REPORTS TO WHICH THE SEAL OF A PROFESSIONAL ENGINEER HAS BEEN APPLIED. IF AN ITEM BEARING THE SEAL OF A PROFESSIONAL ENGINEER IS ALTERED, THE ALTERING ENGINEER SHALL AFFIX TO THE ITEM HIS SEAL AND THE NOTATION "ALTERED BY" FOLLOWED BY HIS SIGNATURE, THE DATE, AND A SPECIFIC DESCRIPTION OF THE ALTERATION.

REV	ISSUED FOR	DATE	BY

PROJECT ENGINEER:	R. FROST
DESIGNED BY:	J. EDER
DRAWN BY:	R. HERNANDEZ
CHECKED BY:	C. PHILLIPS

IF THIS BAR DOES NOT MEASURE 1" THEN DRAWING IS NOT TO FULL SCALE 0 1/2" 1"

BID SET

STATE OF NEW YORK · JC EDER · 097035 · LICENSED PROFESSIONAL ENGINEER

Hazen

HAZEN AND SAWYER
498 SEVENTH AVENUE, 11th FLOOR
NEW YORK, NEW YORK 10018

WESTCHESTER JOINT WATER WORKS
MAMARONECK, NY

RYE LAKE WATER FILTRATION PLANT
HARRISON, NY

FILTRATION PLANT
STRUCTURAL
SECTIONS - SHEET 12

DATE:	FEB 2025
HAZEN NO.:	90388-000
CONTRACT NO.:	A1364-A
DRAWING NUMBER:	S-211

Autodesk Docs://90388-000_Rye_Lake_Filtration/90388-000-WFP-S.rvt
2/20/2025 11:00:16 AM

NOTES:

1. ALL STRUCTURAL STEEL THAT IS NOT ENCASED IN CONCRETE SHALL BE GALVANIZED.
2. SOIL TIEDOWNS NOT SHOWN, SEE SOIL TIEDOWN PLANS.
3. * DENOTES CONCRETE ENCASED FRAMING. FOR CONCRETE ENCASED BEAMS, SEE DETAIL 7/S-302 UNO. FOR CONCRETE ENCASED COLUMNS SEE DETAIL 12/S-302 UNLESS NOTED OTHERWISE.

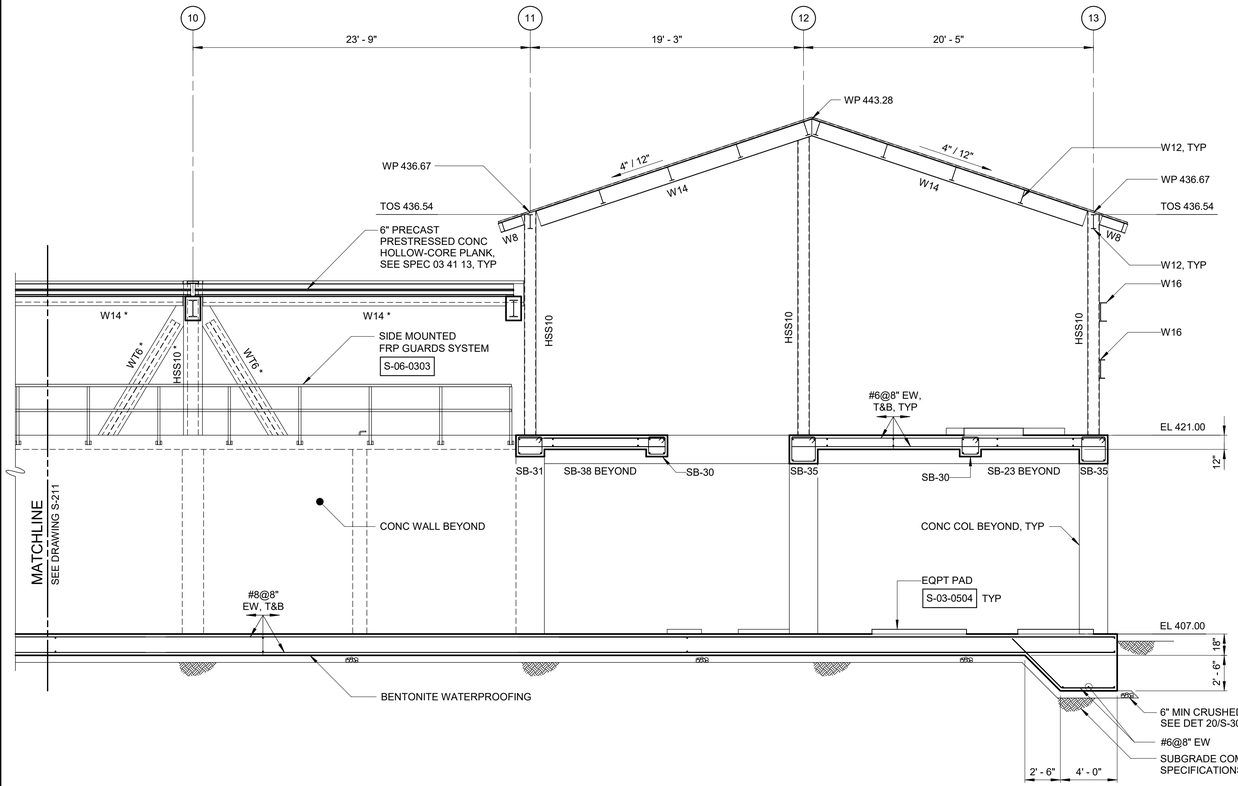

SECTION H
3/16" = 1'-0"
S-101

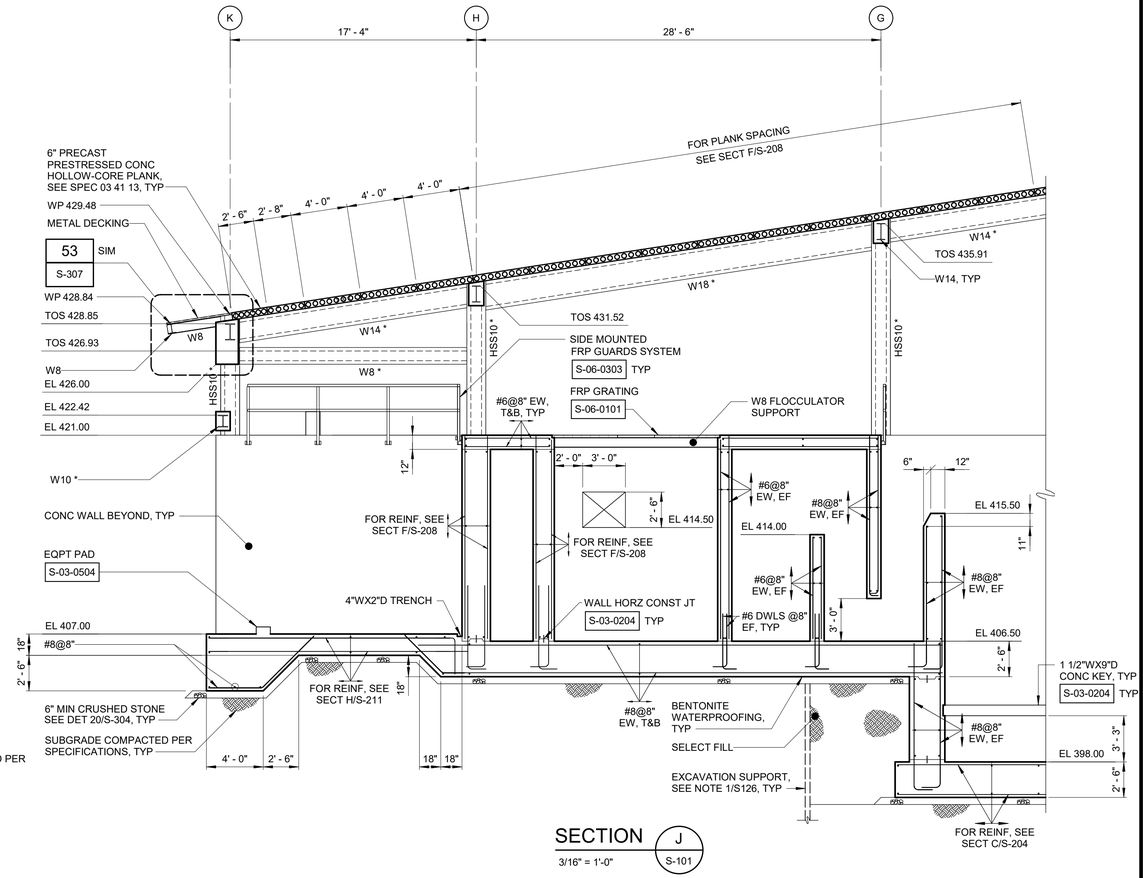

SECTION J
3/16" = 1'-0"
S-101

3/16" = 1'-0"
6 4 2 0 5'

WARNING
IT IS A VIOLATION OF SECTION 7209.2 OF THE NEW YORK STATE EDUCATION LAW FOR ANY PERSON, UNLESS ACTING UNDER THE DIRECTION OF A LICENSED PROFESSIONAL ENGINEER, TO ALTER IN ANY WAY PLANS, SPECIFICATIONS, PLATS OR REPORTS TO WHICH THE SEAL OF A PROFESSIONAL ENGINEER HAS BEEN APPLIED. IF AN ITEM BEARING THE SEAL OF A PROFESSIONAL ENGINEER IS ALTERED, THE ALTERING ENGINEER SHALL AFFIX TO THE ITEM HIS SEAL AND THE NOTATION "ALTERED BY" FOLLOWED BY HIS SIGNATURE, THE DATE, AND A SPECIFIC DESCRIPTION OF THE ALTERATION.

REV	ISSUED FOR	DATE	BY

PROJECT ENGINEER:	R. FROST
DESIGNED BY:	J. EDER
DRAWN BY:	R. HERNANDEZ
CHECKED BY:	C. PHILLIPS
IF THIS BAR DOES NOT MEASURE 1" THEN DRAWING IS NOT TO FULL SCALE	0 1/2" 1"

BID SET

STATE OF NEW YORK · JC EDER · 097035 · LICENSED PROFESSIONAL ENGINEER

Hazen

HAZEN AND SAWYER
498 SEVENTH AVENUE, 11th FLOOR
NEW YORK, NEW YORK 10018

WESTCHESTER JOINT WATER WORKS
MAMARONECK, NY

RYE LAKE WATER FILTRATION PLANT
HARRISON, NY

FILTRATION PLANT
STRUCTURAL
SECTIONS - SHEET 13

DATE:	FEB 2025
HAZEN NO.:	90388-000
CONTRACT NO.:	A1364-A
DRAWING NUMBER:	S-212

Autodesk Docs://90388-000_Rye_Lake_Filtration/90388-000-WFP-S.rvt
2/20/2025 11:00:18 AM

NOTES:

1. SOIL TIEDOWNS NOT SHOWN, SEE SOIL TIEDOWN PLANS.

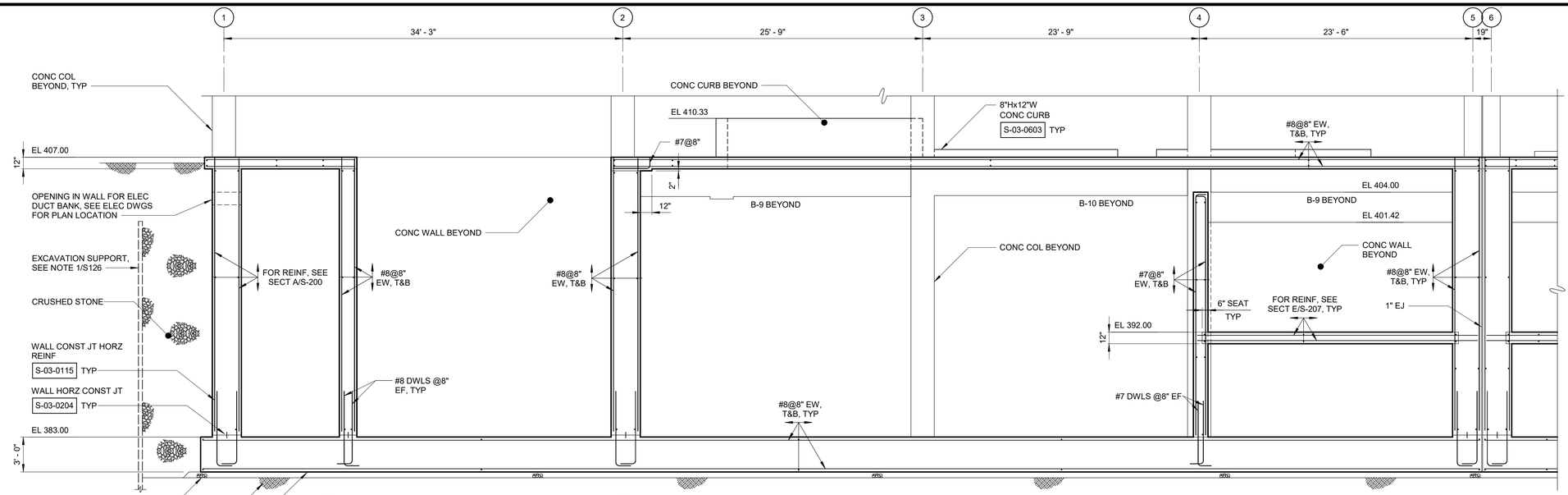

SECTION K
3/16" = 1'-0"
S-100

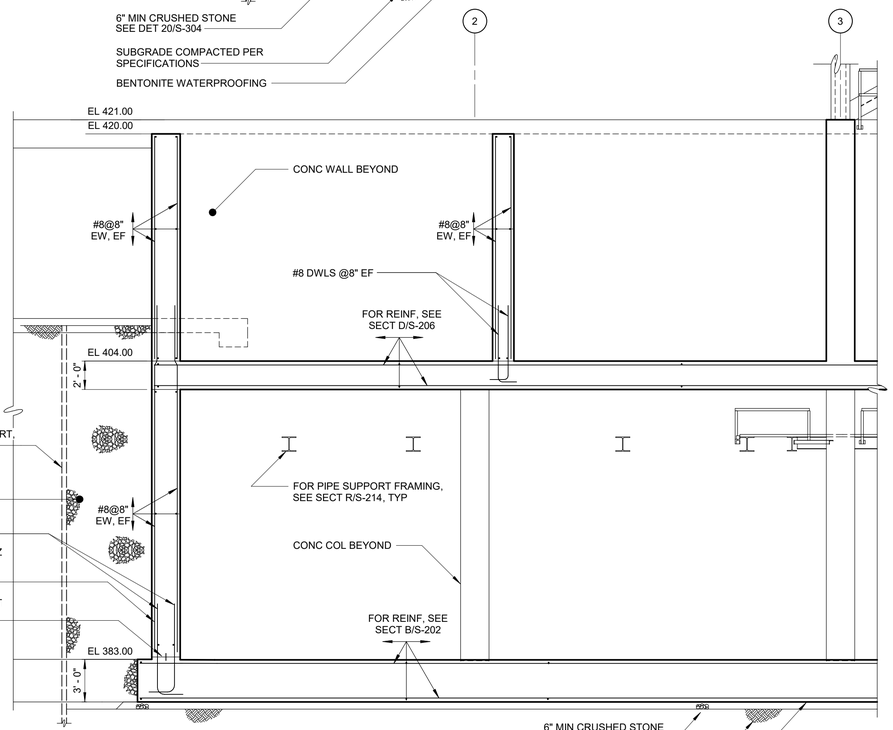

SECTION L
3/16" = 1'-0"
S-100

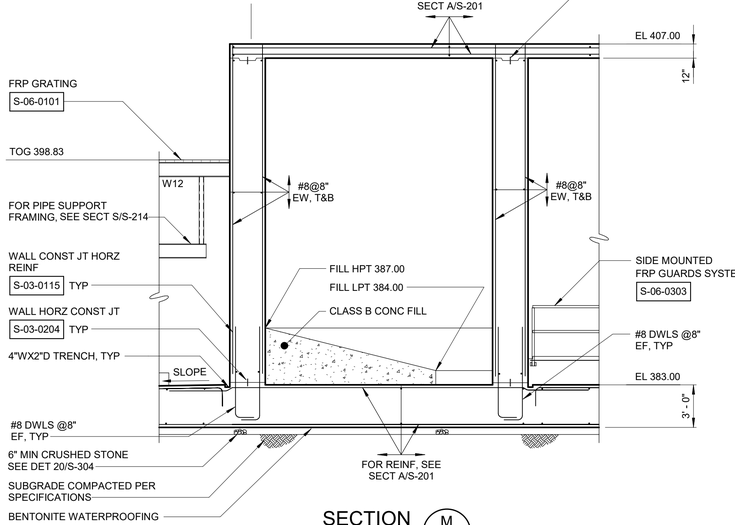

SECTION M
3/16" = 1'-0"
S-100

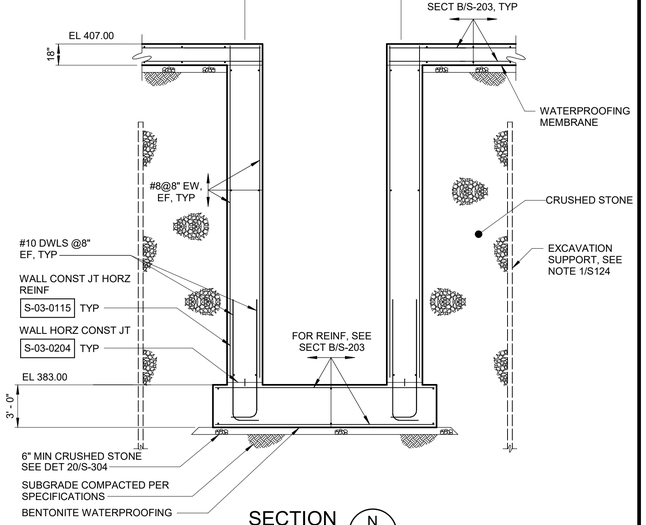

SECTION N
3/16" = 1'-0"
S-100

3/16" = 1'-0"

WARNING
IT IS A VIOLATION OF SECTION 7209.2 OF THE NEW YORK STATE EDUCATION LAW FOR ANY PERSON, UNLESS ACTING UNDER THE DIRECTION OF A LICENSED PROFESSIONAL ENGINEER, TO ALTER IN ANY WAY PLANS, SPECIFICATIONS, PLATS OR REPORTS TO WHICH THE SEAL OF A PROFESSIONAL ENGINEER HAS BEEN APPLIED. IF AN ITEM BEARING THE SEAL OF A PROFESSIONAL ENGINEER IS ALTERED, THE ALTERING ENGINEER SHALL AFFIX TO THE ITEM HIS SEAL AND THE NOTATION "ALTERED BY" FOLLOWED BY HIS SIGNATURE, THE DATE, AND A SPECIFIC DESCRIPTION OF THE ALTERATION.

REV	ISSUED FOR	DATE	BY

PROJECT ENGINEER:	R. FROST
DESIGNED BY:	J. EDER
DRAWN BY:	R. HERNANDEZ
CHECKED BY:	C. PHILLIPS

IF THIS BAR DOES NOT MEASURE 1" THEN DRAWING IS NOT TO FULL SCALE 0 1/2" 1"

BID SET

STATE OF NEW YORK · JC EDER · 097035 · LICENSED PROFESSIONAL ENGINEER

Hazen
HAZEN AND SAWYER
498 SEVENTH AVENUE, 11th FLOOR
NEW YORK, NEW YORK 10018

WESTCHESTER JOINT WATER WORKS
MAMARONECK, NY

RYE LAKE WATER FILTRATION PLANT
HARRISON, NY

FILTRATION PLANT
STRUCTURAL
SECTIONS - SHEET 14

DATE:	FEB 2025
HAZEN NO.:	90388-000
CONTRACT NO.:	A1364-A
DRAWING NUMBER:	S-213

Autodesk Docs://90388-000_Rye_Lake_Filtration/90388-000-WFP-S.rvt
2/20/2025 11:00:21 AM

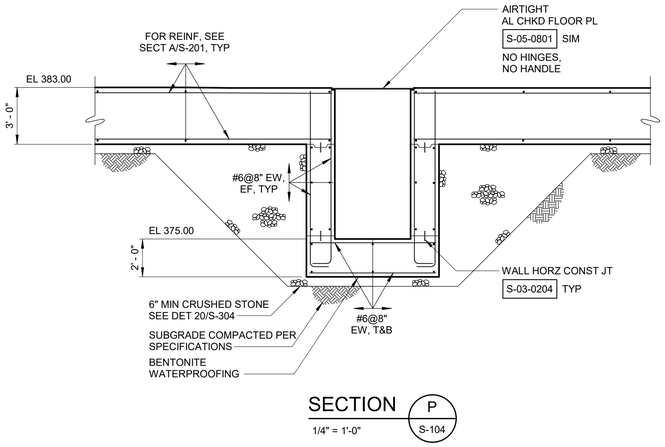

SECTION P
1/4" = 1'-0"
S-104

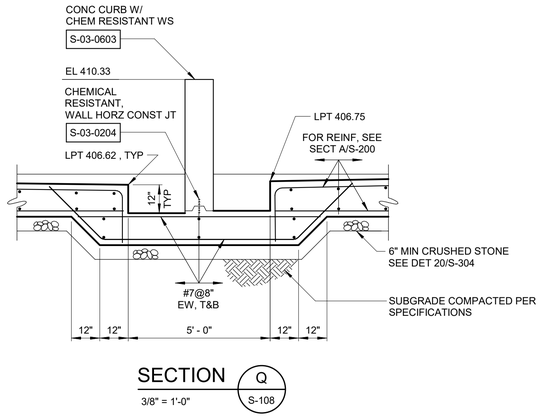

SECTION Q
3/8" = 1'-0"
S-108

NOTES:

1. ALL STRUCTURAL STEEL SHALL BE GALVANIZED.
2. TRAPEZES ARE INTENDED TO SUPPORT PROCESS PIPES USING PIPE SADDLES PER STANDARD DETAIL M-40-0309 OR HANGERS SIMILAR TO STANDARD DETAIL M-40-0306. FOR PROCESS PIPE SIZES AND LOCATIONS, SEE MECHANICAL DRAWINGS. 30"Ø BWS, 20"Ø BWS, 42"Ø WWW, AND 48"Ø FLW PIPES AND PIPES CONNECTED TO THEM SHALL BE SUPPORTED AT LOCATIONS SHOWN ON MECHANICAL DRAWINGS. CONTRACTOR MAY SUBMIT ALTERNATE PIPE SUPPORTS FOR APPROVAL. TOP OF STEEL ELEVATIONS SHALL BE DETERMINED TO ACCOMMODATE PIPES AND PIPE SUPPORTS.
3. SOIL TIEDOWNS NOT SHOWN, SEE SOIL TIEDOWN PLANS.

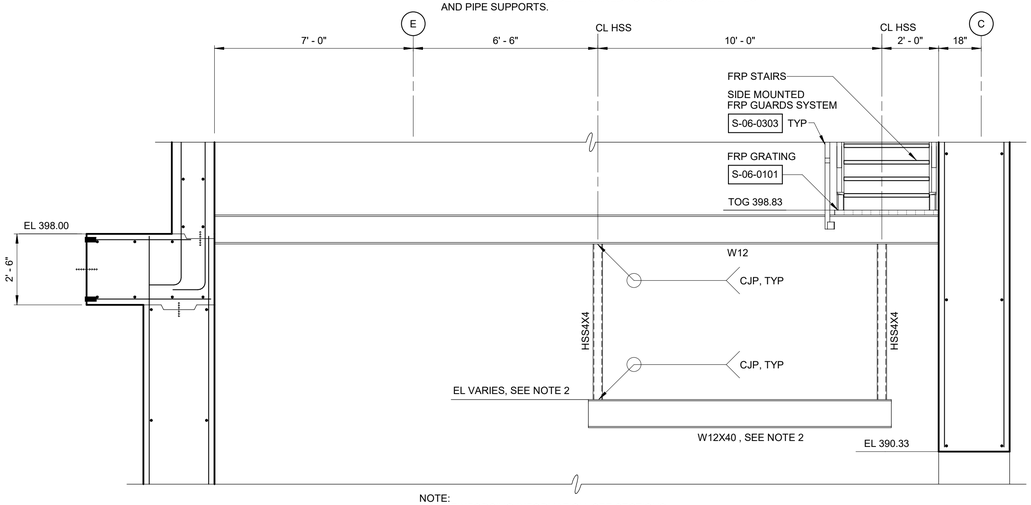

NOTE:
FOR REINFORCING INFORMATION, SEE SECTIONS.

SECTION R
3/8" = 1'-0"
S-106

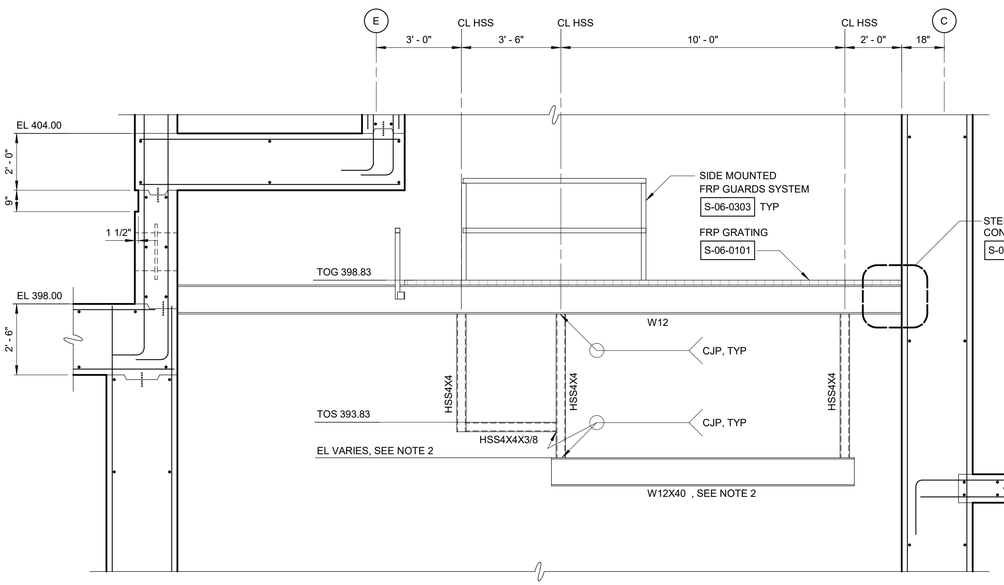

NOTE:
FOR REINFORCING INFORMATION, SEE SECTIONS.

SECTION S
3/8" = 1'-0"
S-106

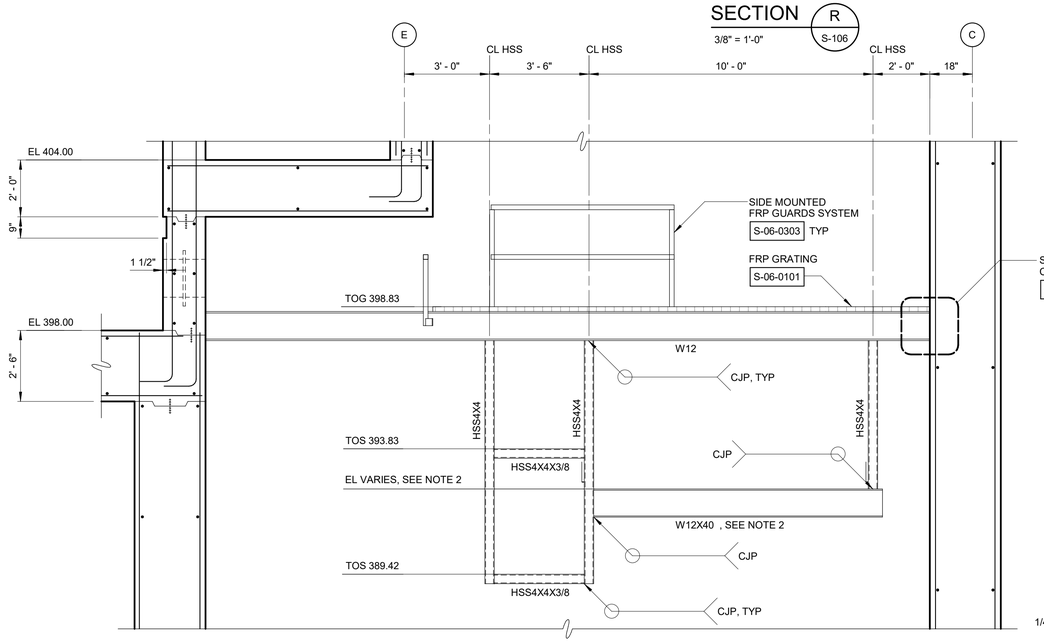

NOTE:
FOR REINFORCING INFORMATION, SEE SECTIONS.

SECTION T
3/8" = 1'-0"
S-106

1/4" = 1'-0" 1 0 1 2 3 7'

3/8" = 1'-0" 12" 0 1 2 4'

WARNING
IT IS A VIOLATION OF SECTION 7209.2 OF THE NEW YORK STATE EDUCATION LAW FOR ANY PERSON, UNLESS ACTING UNDER THE DIRECTION OF A LICENSED PROFESSIONAL ENGINEER, TO ALTER IN ANY WAY PLANS, SPECIFICATIONS, PLATS OR REPORTS TO WHICH THE SEAL OF A PROFESSIONAL ENGINEER HAS BEEN APPLIED. IF AN ITEM BEARING THE SEAL OF A PROFESSIONAL ENGINEER IS ALTERED, THE ALTERING ENGINEER SHALL AFFIX TO THE ITEM HIS SEAL AND THE NOTATION "ALTERED BY" FOLLOWED BY HIS SIGNATURE, THE DATE, AND A SPECIFIC DESCRIPTION OF THE ALTERATION.

REV	ISSUED FOR	DATE	BY

PROJECT ENGINEER:	R. FROST
DESIGNED BY:	J. EDER
DRAWN BY:	R. HERNANDEZ
CHECKED BY:	C. PHILLIPS

IF THIS BAR DOES NOT MEASURE 1" THEN DRAWING IS NOT TO FULL SCALE 0 1/2" 1"

BID SET

STATE OF NEW YORK JC EDER 097035 LICENSED PROFESSIONAL ENGINEER

Hazen
HAZEN AND SAWYER
498 SEVENTH AVENUE, 11th FLOOR
NEW YORK, NEW YORK 10018

WESTCHESTER JOINT WATER WORKS
MAMARONECK, NY

RYE LAKE WATER FILTRATION PLANT
HARRISON, NY

FILTRATION PLANT
STRUCTURAL
SECTIONS - SHEET 15

DATE:	FEB 2025
HAZEN NO.:	90388-000
CONTRACT NO.:	A1364-A
DRAWING NUMBER:	S-214

Autodesk Docs://90388-000_Rye_Lake_Filtration/90388-000-WFP-S.rvt
2/20/2025 11:00:23 AM

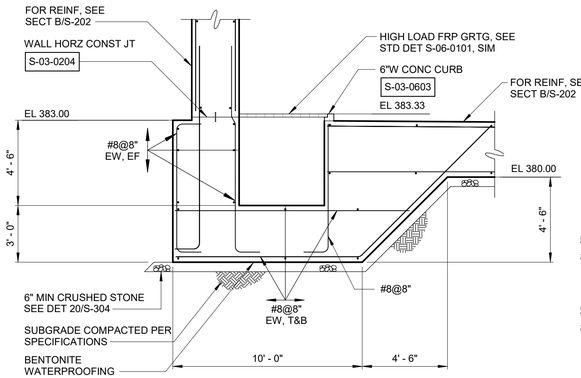

SECTION U (S-100) 1/4" = 1'-0"

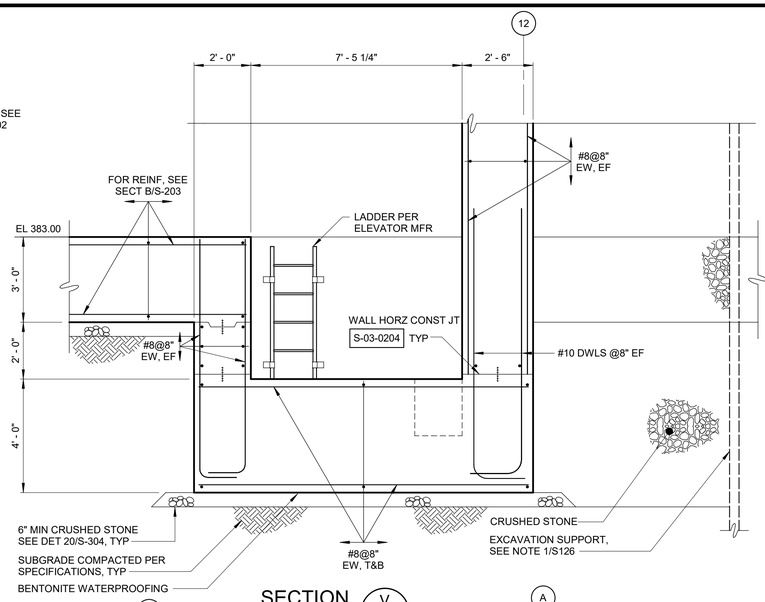

SECTION V (S-100) 3/8" = 1'-0"

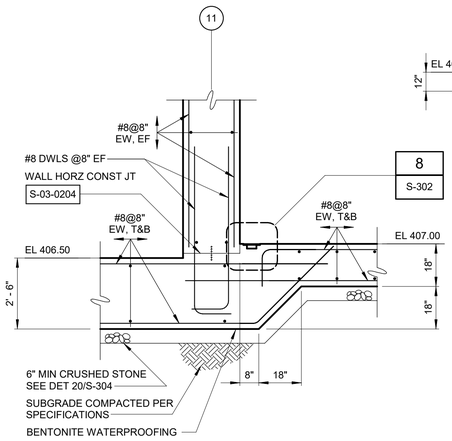

SECTION W (S-112) 3/8" = 1'-0"

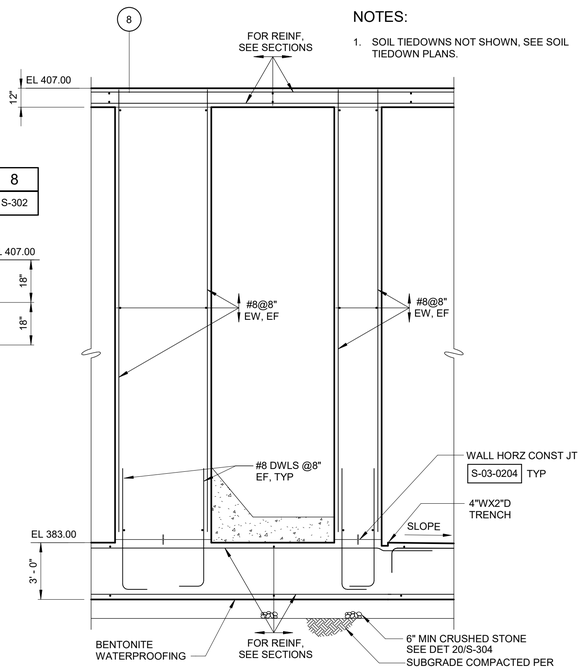

NOTES:

1. SOIL TIEDOWNS NOT SHOWN, SEE SOIL TIEDOWN PLANS.

SECTION X (S-104) A 1/4" = 1'-0"

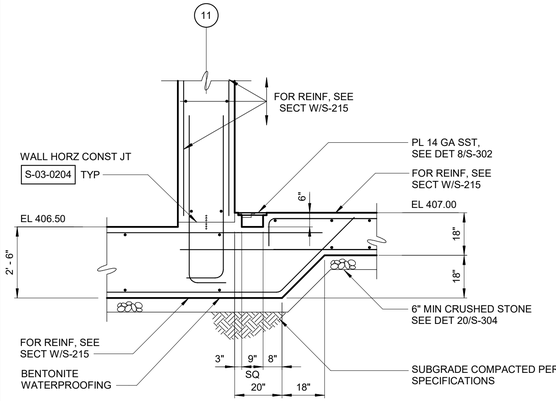

SECTION Y (S-112) 3/8" = 1'-0"

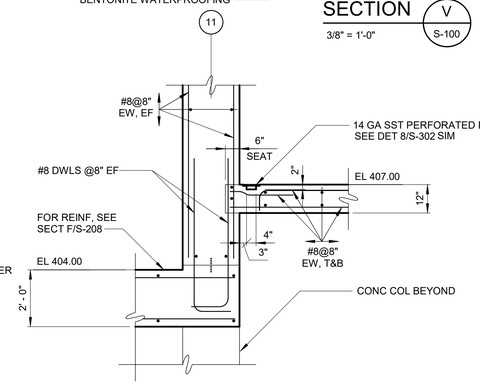

SECTION Z (S-109) 3/8" = 1'-0"

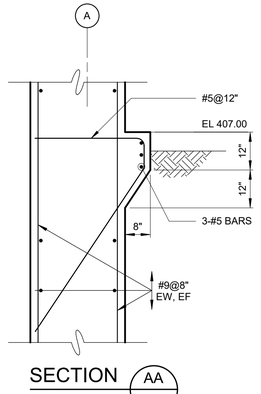

SECTION AA (S-109) 1/2" = 1'-0"

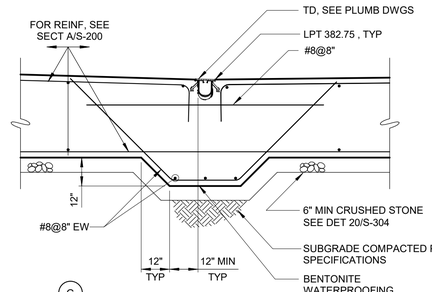

SECTION BB (S-103) 3/8" = 1'-0"

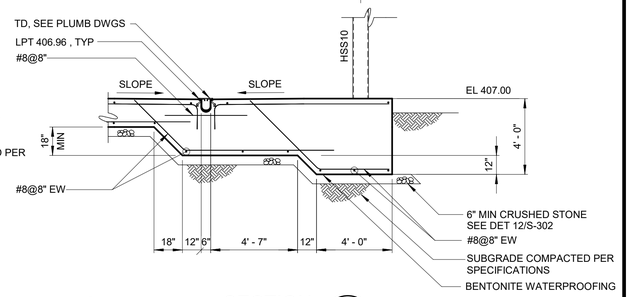

SECTION CC (S-108) 1/4" = 1'-0"

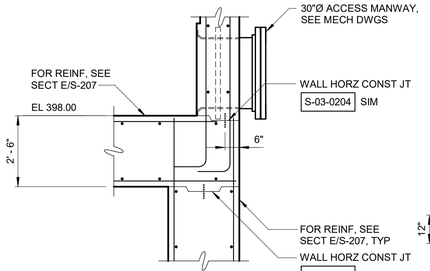

SECTION DD (S-106) 3/8" = 1'-0"

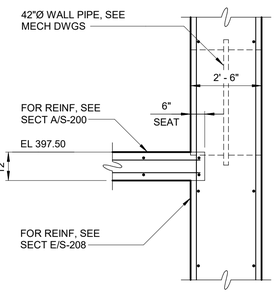

SECTION EE (S-126) 3/8" = 1'-0"

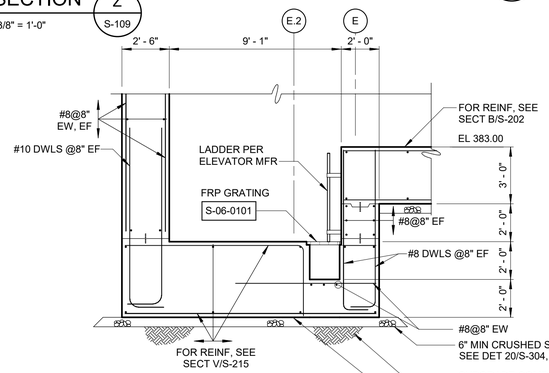

SECTION WW (S-105) 1/4" = 1'-0"

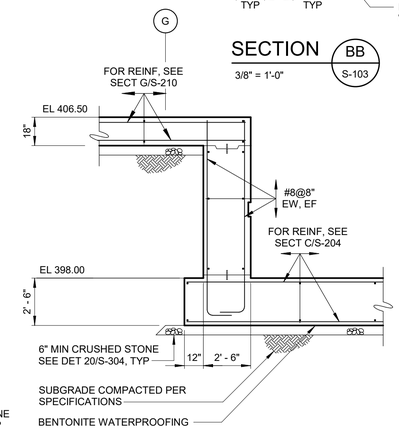

SECTION XX (S-106) 1/4" = 1'-0"

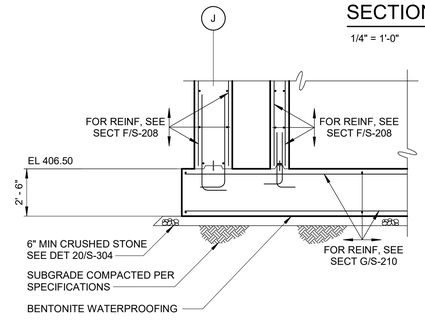

SECTION YY (S-112) 1/4" = 1'-0"

1/4" = 1'-0" 1 0 1 2 3 7'

3/8" = 1'-0" 12" 0 1 2 4'

1/2" = 1'-0" 12" 0 1 3'

WARNING
IT IS A VIOLATION OF SECTION 7209.2 OF THE NEW YORK STATE EDUCATION LAW FOR ANY PERSON, UNLESS ACTING UNDER THE DIRECTION OF A LICENSED PROFESSIONAL ENGINEER, TO ALTER IN ANY WAY PLANS, SPECIFICATIONS, PLATS OR REPORTS TO WHICH THE SEAL OF A PROFESSIONAL ENGINEER HAS BEEN APPLIED. IF AN ITEM BEARING THE SEAL OF A PROFESSIONAL ENGINEER IS ALTERED, THE ALTERING ENGINEER SHALL AFFIX TO THE ITEM HIS SEAL AND THE NOTATION "ALTERED BY" FOLLOWED BY HIS SIGNATURE, THE DATE, AND A SPECIFIC DESCRIPTION OF THE ALTERATION.

REV	ISSUED FOR	DATE	BY

PROJECT ENGINEER:	R. FROST
DESIGNED BY:	J. EDER
DRAWN BY:	R. HERNANDEZ
CHECKED BY:	C. PHILLIPS

IF THIS BAR DOES NOT MEASURE 1" THEN DRAWING IS NOT TO FULL SCALE 0 1/2" 1"

BID SET

STATE OF NEW YORK · JC EDER · 097035 · LICENSED PROFESSIONAL ENGINEER

Hazen
HAZEN AND SAWYER
498 SEVENTH AVENUE, 11th FLOOR
NEW YORK, NEW YORK 10018

WESTCHESTER JOINT WATER WORKS
MAMARONECK, NY

RYE LAKE WATER FILTRATION PLANT
HARRISON, NY

FILTRATION PLANT
STRUCTURAL
SECTIONS - SHEET 16

DATE:	FEB 2025
HAZEN NO.:	90388-000
CONTRACT NO.:	A1364-A
DRAWING NUMBER:	S-215

Autodesk Docs://90388-000_Rye_Lake_Filtration/90388-000-WFP-S.rvt
2/20/2025 11:00:28 AM

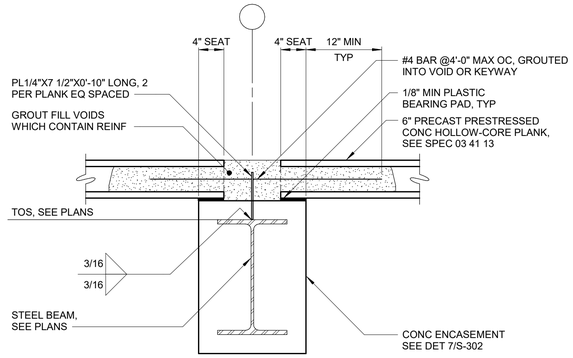

SECTION FF
1" = 1'-0" S-120

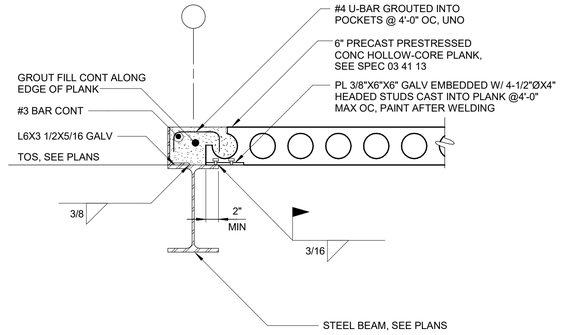

SECTION GG
1" = 1'-0" S-120

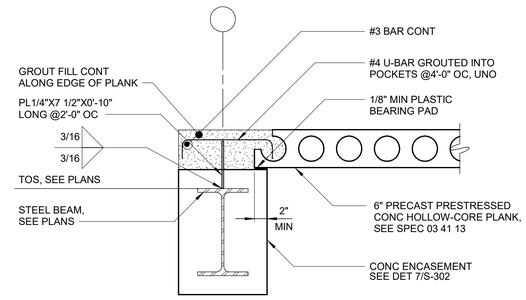

SECTION HH
1" = 1'-0" S-120

NOTES:

1. ALL STRUCTURAL STEEL THAT IS NOT ENCASED IN CONCRETE SHALL BE GALVANIZED.
2. FOR SUPPORT OF EXCAVATION, SEE DRAWING S-126.

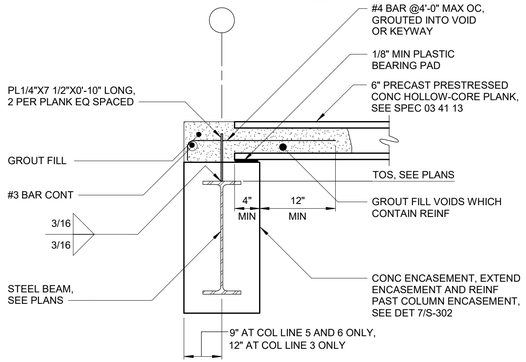

SECTION JJ
1" = 1'-0" S-120

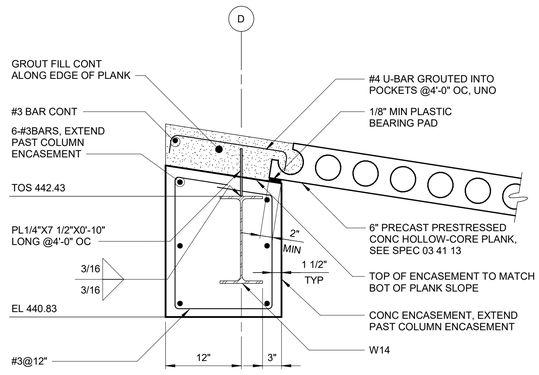

SECTION KK
1" = 1'-0" S-123

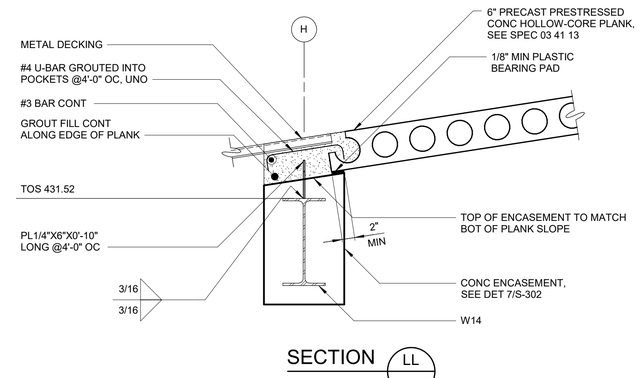

SECTION LL
1" = 1'-0" S-123

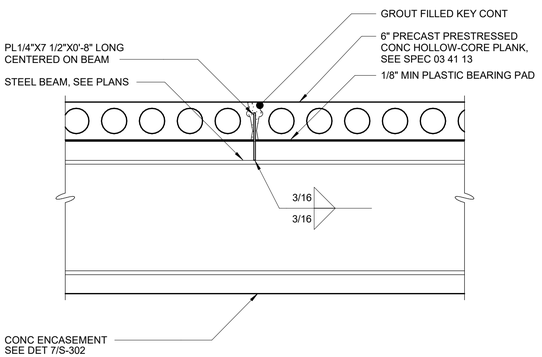

SECTION MM
1" = 1'-0" S-120

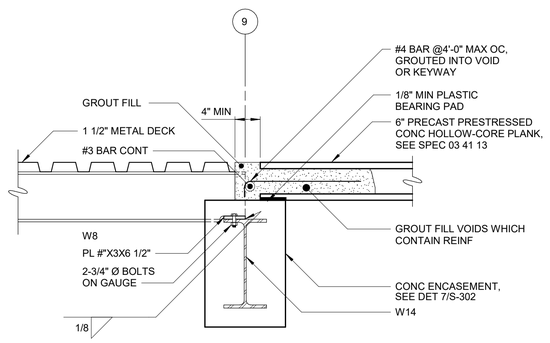

SECTION NN
1" = 1'-0" S-123

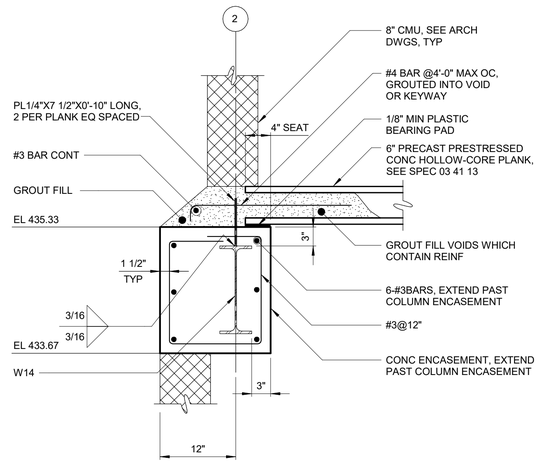

NOTE:
CONCRETE BEAM ENCASEMENT SHALL MATCH THIS DETAIL FOR W14X53, SEE PLANS.

SECTION PP
1" = 1'-0" S-120

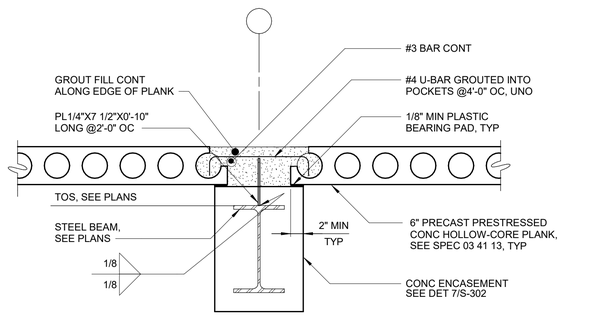

SECTION QQ
1" = 1'-0" S-120

1" = 1'-0" 12" 6 0 1'

WARNING
IT IS A VIOLATION OF SECTION 7209.2 OF THE NEW YORK STATE EDUCATION LAW FOR ANY PERSON, UNLESS ACTING UNDER THE DIRECTION OF A LICENSED PROFESSIONAL ENGINEER, TO ALTER IN ANY WAY PLANS, SPECIFICATIONS, PLATS OR REPORTS TO WHICH THE SEAL OF A PROFESSIONAL ENGINEER HAS BEEN APPLIED. IF AN ITEM BEARING THE SEAL OF A PROFESSIONAL ENGINEER IS ALTERED, THE ALTERING ENGINEER SHALL AFFIX TO THE ITEM HIS SEAL AND THE NOTATION "ALTERED BY" FOLLOWED BY HIS SIGNATURE, THE DATE, AND A SPECIFIC DESCRIPTION OF THE ALTERATION.

REV	ISSUED FOR	DATE	BY

PROJECT ENGINEER:	R. FROST
DESIGNED BY:	J. EDER
DRAWN BY:	R. HERNANDEZ
CHECKED BY:	C. PHILLIPS

IF THIS BAR DOES NOT MEASURE 1" THEN DRAWING IS NOT TO FULL SCALE 0 1/2" 1"

BID SET

STATE OF NEW YORK · JC EDER · 097035 · LICENSED PROFESSIONAL ENGINEER

Hazen
HAZEN AND SAWYER
498 SEVENTH AVENUE, 11th FLOOR
NEW YORK, NEW YORK 10018

WESTCHESTER JOINT WATER WORKS
MAMARONECK, NY

RYE LAKE WATER FILTRATION PLANT
HARRISON, NY

FILTRATION PLANT
STRUCTURAL
SECTIONS - SHEET 17

DATE:	FEB 2025
HAZEN NO.:	90388-000
CONTRACT NO.:	A1364-A
DRAWING NUMBER:	S-216

Autodesk Docs://90388-000_Rye_Lake_Filtration/90388-000-WFP-S.rvt
2/20/2025 11:00:30 AM

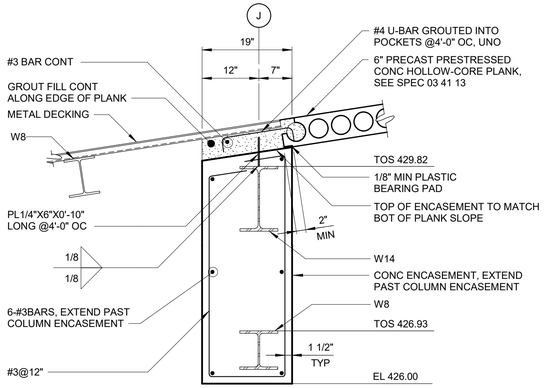

SECTION RR
3/4" = 1'-0"
S-123

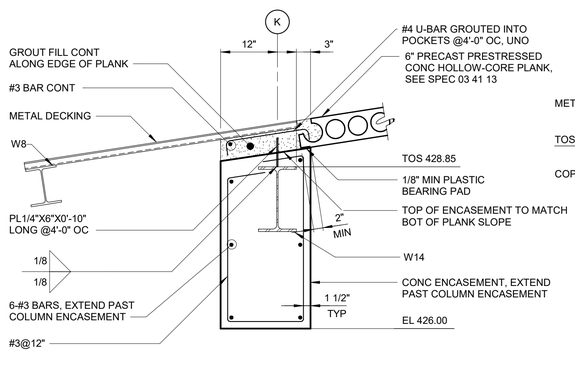

SECTION SS
3/4" = 1'-0"
S-123

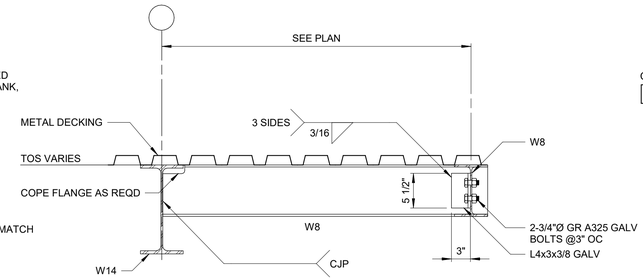

SECTION TT
1" = 1'-0"
S-123

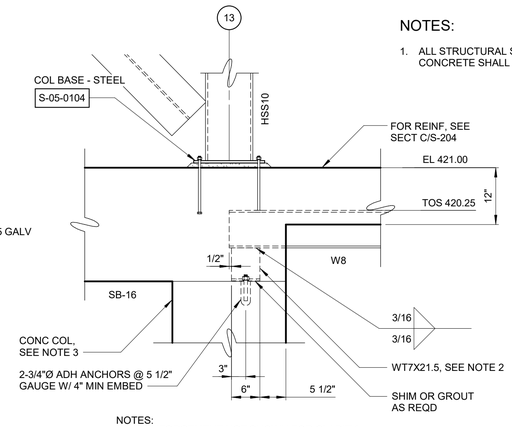

NOTES:

1. ALL STRUCTURAL STEEL THAT IS NOT ENCASED IN CONCRETE SHALL BE GALVANIZED.

NOTES:
1. REINFORCEMENT NOT SHOWN FOR CLARITY.
2. AT COLUMN LINE 13-F.3 IN LIEU OF WT, PROVIDE 1" NON-SHRINK GROUT. ANCHORAGE SHALL BE THROUGH W8 FLANGE.
3. CONTRACTOR TO COORDINATE VERTICAL COLUMN REINFORCING LOCATION PER DETAIL 3/S-301 TYPE II AND STANDARD DETAIL S-03-0802 TO AVOID W8 AND CONNECTION APPURTENANCES.

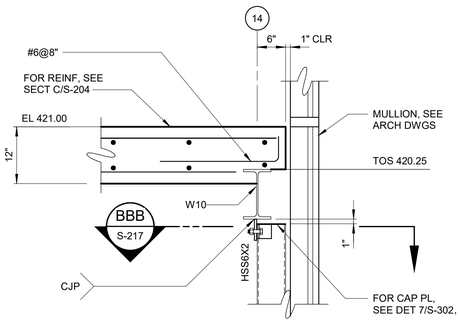

SECTION VV
3/4" = 1'-0"
S-119

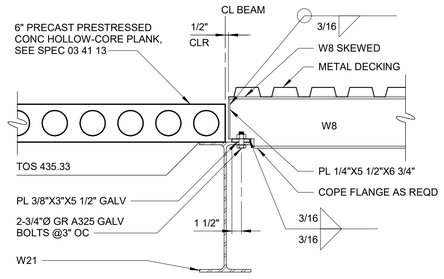

SECTION ZZ
1" = 1'-0"
S-124

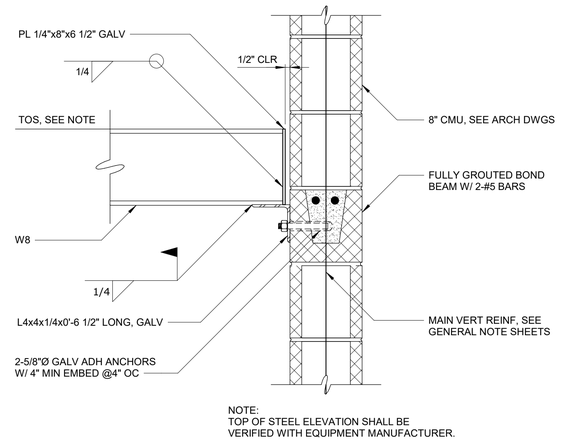

NOTE:
TOP OF STEEL ELEVATION SHALL BE VERIFIED WITH EQUIPMENT MANUFACTURER.

SECTION AAA
1 1/2" = 1'-0"
S-124

SECTION UU
3/4" = 1'-0"
S-116

SECTION DDD
1/2" = 1'-0"
S-108

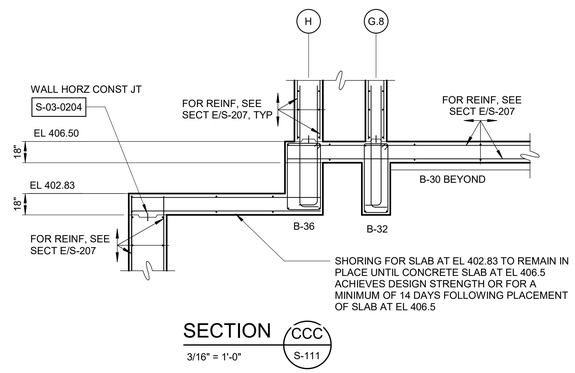

SECTION CCC
3/16" = 1'-0"
S-111

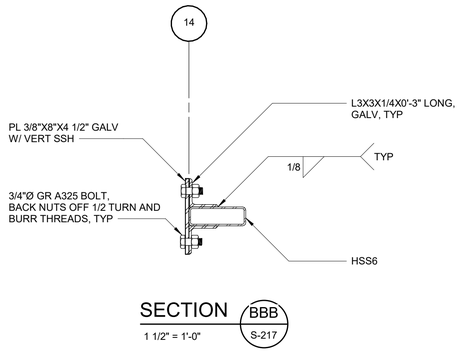

SECTION BBB
1 1/2" = 1'-0"
S-217

WARNING
IT IS A VIOLATION OF SECTION 7209.2 OF THE NEW YORK STATE EDUCATION LAW FOR ANY PERSON, UNLESS ACTING UNDER THE DIRECTION OF A LICENSED PROFESSIONAL ENGINEER, TO ALTER IN ANY WAY PLANS, SPECIFICATIONS, PLATS OR REPORTS TO WHICH THE SEAL OF A PROFESSIONAL ENGINEER HAS BEEN APPLIED. IF AN ITEM BEARING THE SEAL OF A PROFESSIONAL ENGINEER IS ALTERED, THE ALTERING ENGINEER SHALL AFFIX TO THE ITEM HIS SEAL AND THE NOTATION "ALTERED BY" FOLLOWED BY HIS SIGNATURE, THE DATE, AND A SPECIFIC DESCRIPTION OF THE ALTERATION.

REV	ISSUED FOR	DATE	BY

PROJECT ENGINEER:	R. FROST
DESIGNED BY:	J. EDER
DRAWN BY:	R. HERNANDEZ
CHECKED BY:	C. PHILLIPS

IF THIS BAR DOES NOT MEASURE 1" THEN DRAWING IS NOT TO FULL SCALE (0 1/2" 1")

BID SET

STATE OF NEW YORK · JC EDER · 097035 · LICENSED PROFESSIONAL ENGINEER

Hazen

HAZEN AND SAWYER
498 SEVENTH AVENUE, 11th FLOOR
NEW YORK, NEW YORK 10018

WESTCHESTER JOINT WATER WORKS
MAMARONECK, NY

RYE LAKE WATER FILTRATION PLANT
HARRISON, NY

FILTRATION PLANT
STRUCTURAL
SECTIONS - SHEET 18

DATE:	FEB 2025
HAZEN NO.:	90388-000
CONTRACT NO.:	A1364-A
DRAWING NUMBER:	S-217

3/4" = 1'-0" (6" 0 1 2')
1/2" = 1'-0" (12" 0 1 3')
1" = 1'-0"? (12" 6 0 1')

Autodesk Docs://90388-000_Rye_Lake_Filtration/90388-000-WFP-S.rvt
2/20/2025 11:00:33 AM

NOTES:

1. ALL STRUCTURAL STEEL THAT IS NOT ENCASED IN CONCRETE SHALL BE GALVANIZED.
2. FOR COLUMN CAP PLATE, SEE DETAIL 14/S-303, UNLESS NOTED OTHERWISE.

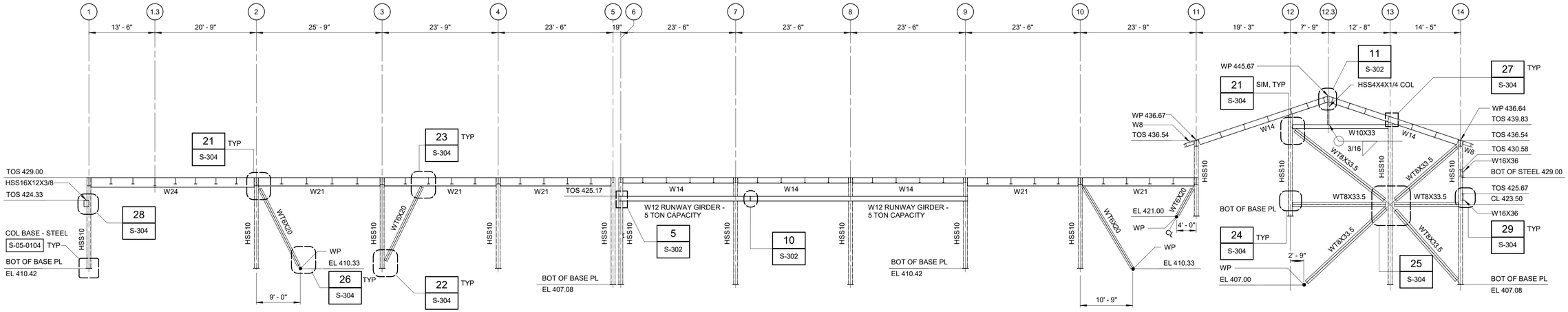

COL LINE A

3/32" = 1'-0"

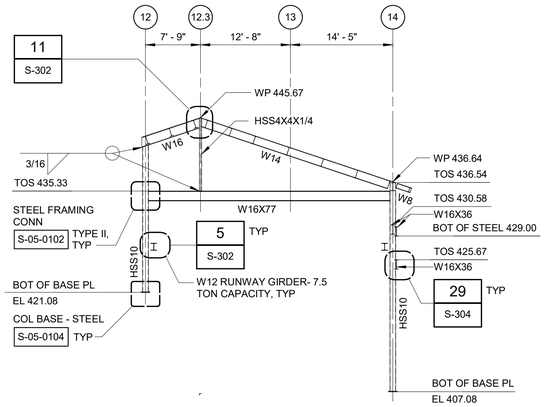

COL LINE A.5

3/32" = 1'-0"

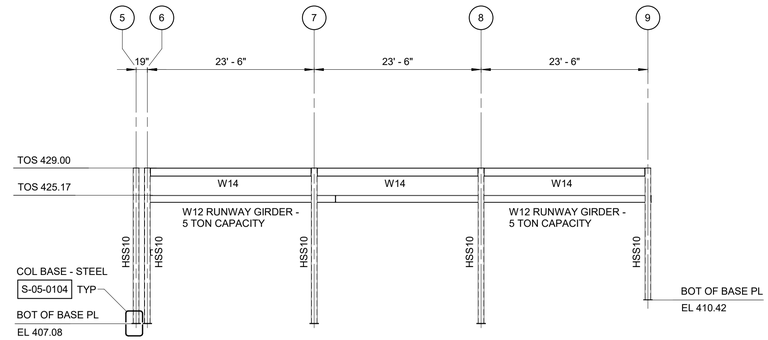

COL LINE A.6

3/32" = 1'-0"

3/32" = 1'-0" 10 8 6 4 2 0 11'

WARNING
IT IS A VIOLATION OF SECTION 7209.2 OF THE NEW YORK STATE EDUCATION LAW FOR ANY PERSON, UNLESS ACTING UNDER THE DIRECTION OF A LICENSED PROFESSIONAL ENGINEER, TO ALTER IN ANY WAY PLANS, SPECIFICATIONS, PLATS OR REPORTS TO WHICH THE SEAL OF A PROFESSIONAL ENGINEER HAS BEEN APPLIED. IF AN ITEM BEARING THE SEAL OF A PROFESSIONAL ENGINEER IS ALTERED, THE ALTERING ENGINEER SHALL AFFIX TO THE ITEM HIS SEAL AND THE NOTATION "ALTERED BY" FOLLOWED BY HIS SIGNATURE, THE DATE, AND A SPECIFIC DESCRIPTION OF THE ALTERATION.

REV	ISSUED FOR	DATE	BY

PROJECT ENGINEER:	R. FROST
DESIGNED BY:	J. EDER
DRAWN BY:	R. HERNANDEZ
CHECKED BY:	C. PHILLIPS
IF THIS BAR DOES NOT MEASURE 1" THEN DRAWING IS NOT TO FULL SCALE	0 1/2" 1"

BID SET

STATE OF NEW YORK · JC EDER · 097035 · LICENSED PROFESSIONAL ENGINEER

Hazen
HAZEN AND SAWYER
498 SEVENTH AVENUE, 11th FLOOR
NEW YORK, NEW YORK 10018

WESTCHESTER JOINT WATER WORKS
MAMARONECK, NY

RYE LAKE WATER FILTRATION PLANT
HARRISON, NY

FILTRATION PLANT
STRUCTURAL
FRAMING ELEVATIONS - SHEET 1

DATE:	FEB 2025
HAZEN NO.:	90388-000
CONTRACT NO.:	A1364-A
DRAWING NUMBER:	S-218

Autodesk Docs://90388-000_Rye_Lake_Filtration/90388-000-WFP-S.rvt
2/20/2025 11:00:34 AM

NOTES:

1. * DENOTES CONCRETE ENCASED FRAMING. FOR CONCRETE ENCASED BEAMS, SEE DETAIL 7/S-302 UNLESS NOTED OTHERWISE. FOR CONCRETE ENCASED COLUMNS, SEE DETAIL 12/S-302, UNLESS NOTED OTHERWISE.
2. ALL STRUCTURAL STEEL THAT IS NOT ENCASED IN CONCRETE SHALL BE GALVANIZED.
3. FOR COLUMN CAP PLATE, SEE DETAIL 14/S-303, UNLESS NOTED OTHERWISE.

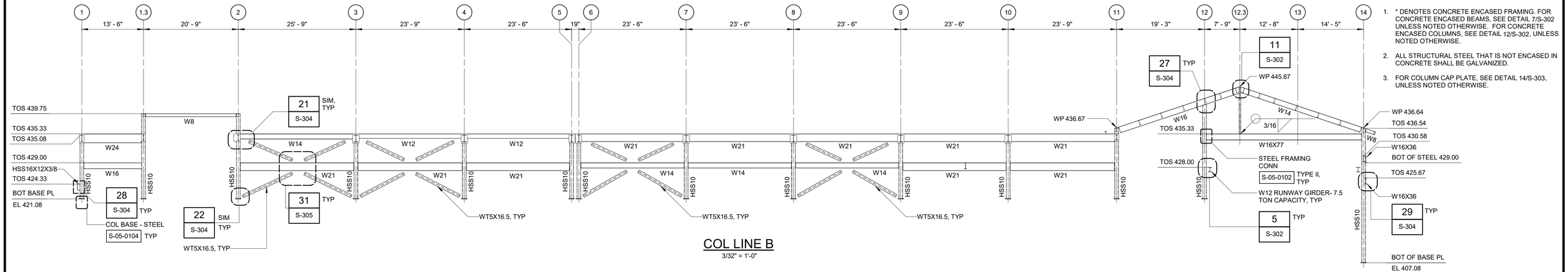

COL LINE B
3/32" = 1'-0"

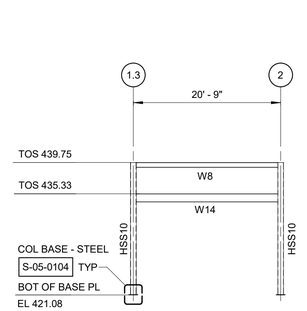

COL LINE C
3/32" = 1'-0"

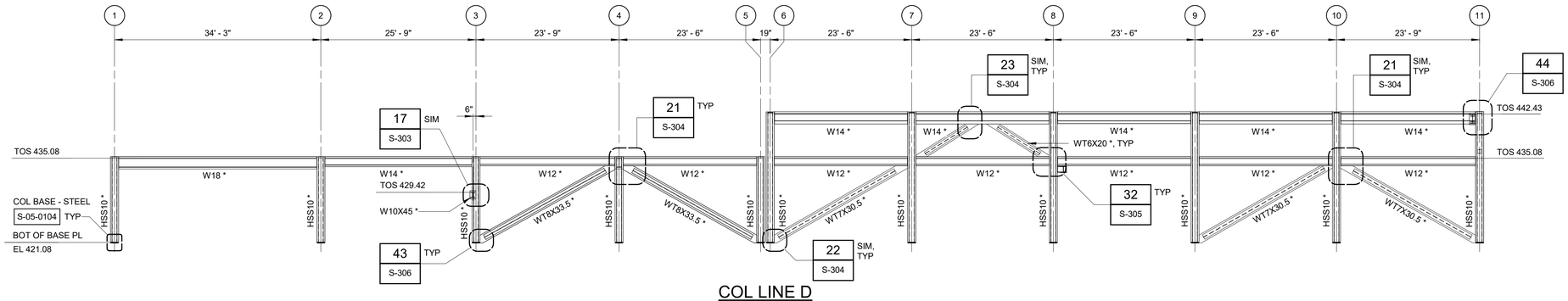

COL LINE D
3/32" = 1'-0"

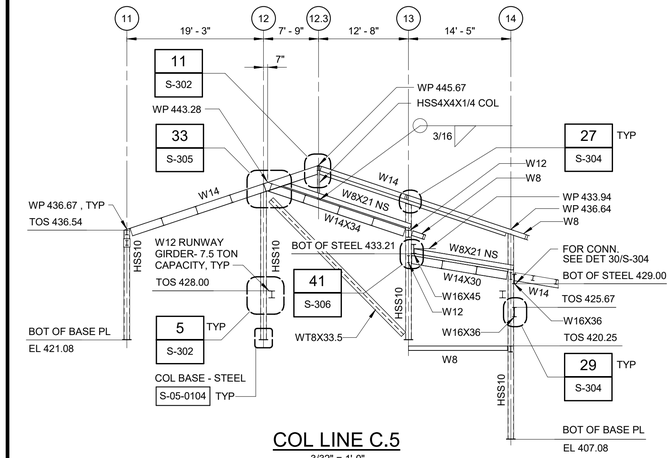

COL LINE C.5
3/32" = 1'-0"

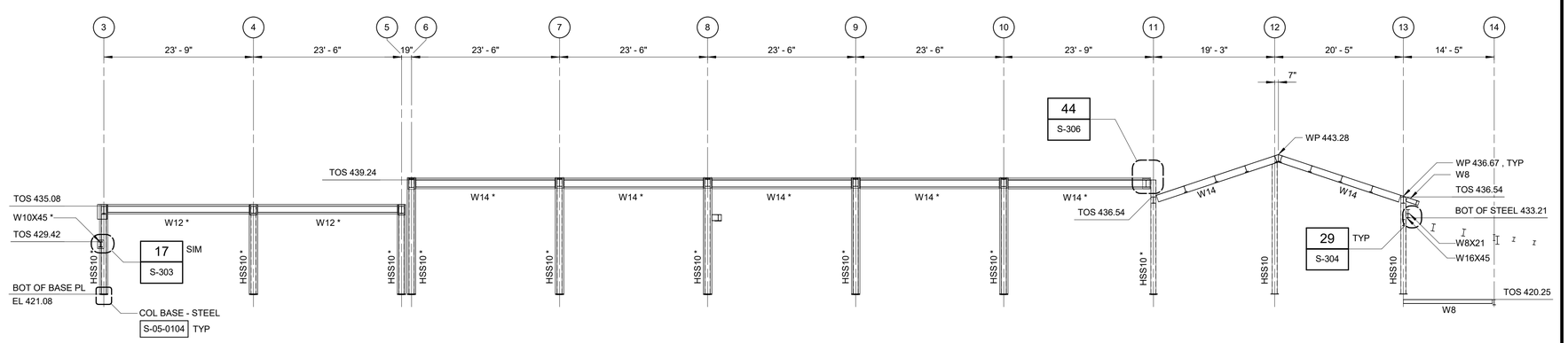

COL LINE F
3/32" = 1'-0"

3/32" = 1'-0" 10 8 6 4 2 0 11'

WARNING
IT IS A VIOLATION OF SECTION 7209.2 OF THE NEW YORK STATE EDUCATION LAW FOR ANY PERSON, UNLESS ACTING UNDER THE DIRECTION OF A LICENSED PROFESSIONAL ENGINEER, TO ALTER IN ANY WAY PLANS, SPECIFICATIONS, PLATS OR REPORTS TO WHICH THE SEAL OF A PROFESSIONAL ENGINEER HAS BEEN APPLIED. IF AN ITEM BEARING THE SEAL OF A PROFESSIONAL ENGINEER IS ALTERED, THE ALTERING ENGINEER SHALL AFFIX TO THE ITEM HIS SEAL AND THE NOTATION "ALTERED BY" FOLLOWED BY HIS SIGNATURE, THE DATE, AND A SPECIFIC DESCRIPTION OF THE ALTERATION.

REV	ISSUED FOR	DATE	BY

PROJECT ENGINEER:	R. FROST
DESIGNED BY:	J. EDER
DRAWN BY:	R. HERNANDEZ
CHECKED BY:	C. PHILLIPS

IF THIS BAR DOES NOT MEASURE 1" THEN DRAWING IS NOT TO FULL SCALE 0 1/2" 1"

BID SET

STATE OF NEW YORK JC EDER 097035 LICENSED PROFESSIONAL ENGINEER

Hazen

HAZEN AND SAWYER
498 SEVENTH AVENUE, 11th FLOOR
NEW YORK, NEW YORK 10018

WESTCHESTER JOINT WATER WORKS
MAMARONECK, NY

RYE LAKE WATER FILTRATION PLANT
HARRISON, NY

FILTRATION PLANT
STRUCTURAL
FRAMING ELEVATIONS - SHEET 2

DATE:	FEB 2025
HAZEN NO.:	90388-000
CONTRACT NO.:	A1364-A
DRAWING NUMBER:	S-219

Autodesk Docs://90388-000_Rye_Lake_Filtration/90388-000-WFP-S.rvt
2/20/2025 11:00:36 AM

NOTES:

1. * DENOTES CONCRETE ENCASED FRAMING. FOR CONCRETE ENCASED BEAMS, SEE DETAIL 7/S-302 UNLESS NOTED OTHERWISE. FOR CONCRETE ENCASED COLUMNS, SEE DETAIL 12/S-302, UNLESS NOTED OTHERWISE.
2. ALL STRUCTURAL STEEL THAT IS NOT ENCASED IN CONCRETE SHALL BE GALVANIZED.
3. FOR COLUMN CAP PLATE, SEE DETAIL 14/S-303, UNLESS NOTED OTHERWISE.

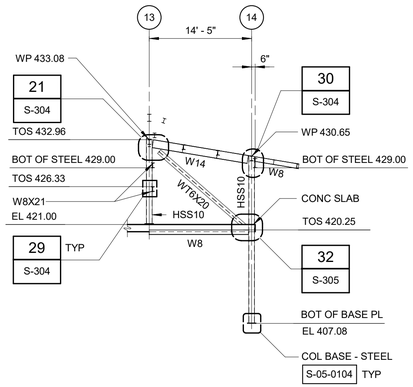

COL LINE F.3
3/32" = 1'-0"

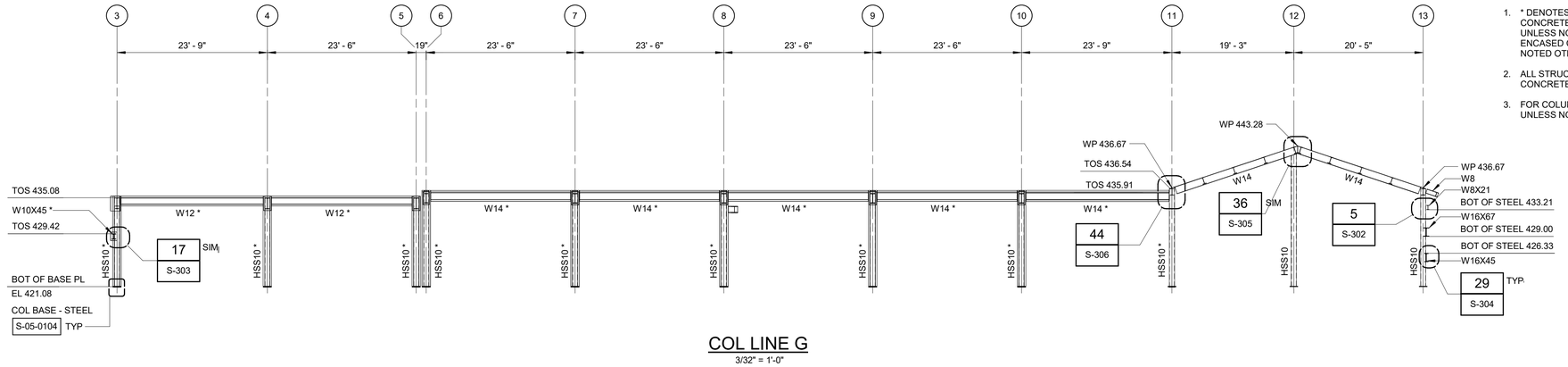

COL LINE G
3/32" = 1'-0"

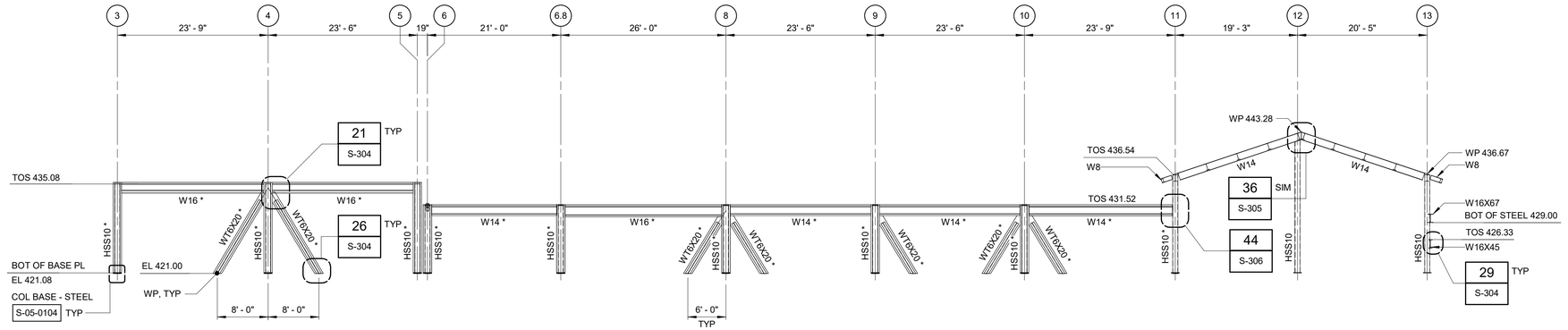

COL LINE H
3/32" = 1'-0"

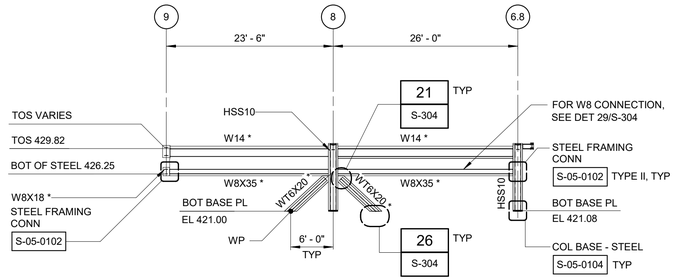

COL LINE J
3/32" = 1'-0"

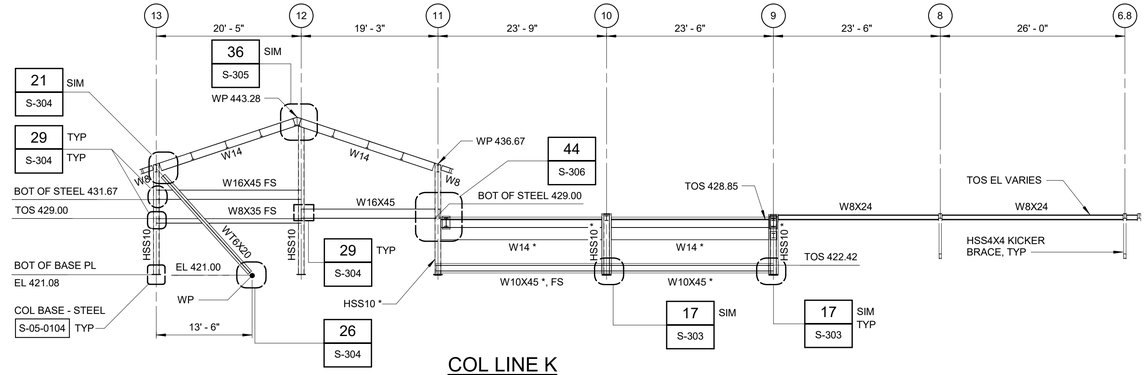

COL LINE K
3/32" = 1'-0"

3/32" = 1'-0" 10 8 6 4 2 0 11'

WARNING
IT IS A VIOLATION OF SECTION 7209.2 OF THE NEW YORK STATE EDUCATION LAW FOR ANY PERSON, UNLESS ACTING UNDER THE DIRECTION OF A LICENSED PROFESSIONAL ENGINEER, TO ALTER IN ANY WAY PLANS, SPECIFICATIONS, PLATS OR REPORTS TO WHICH THE SEAL OF A PROFESSIONAL ENGINEER HAS BEEN APPLIED. IF AN ITEM BEARING THE SEAL OF A PROFESSIONAL ENGINEER IS ALTERED, THE ALTERING ENGINEER SHALL AFFIX TO THE ITEM HIS SEAL AND THE NOTATION "ALTERED BY" FOLLOWED BY HIS SIGNATURE, THE DATE, AND A SPECIFIC DESCRIPTION OF THE ALTERATION.

REV	ISSUED FOR	DATE	BY

PROJECT ENGINEER:	R. FROST
DESIGNED BY:	J. EDER
DRAWN BY:	R. HERNANDEZ
CHECKED BY:	C. PHILLIPS

IF THIS BAR DOES NOT MEASURE 1" THEN DRAWING IS NOT TO FULL SCALE 0 1/2" 1"

BID SET

STATE OF NEW YORK · JC EDER · 097035 · LICENSED PROFESSIONAL ENGINEER

Hazen

HAZEN AND SAWYER
498 SEVENTH AVENUE, 11th FLOOR
NEW YORK, NEW YORK 10018

WESTCHESTER JOINT WATER WORKS
MAMARONECK, NY

RYE LAKE WATER FILTRATION PLANT
HARRISON, NY

FILTRATION PLANT
STRUCTURAL
FRAMING ELEVATIONS - SHEET 3

DATE:	FEB 2025
HAZEN NO.:	90388-000
CONTRACT NO.:	A1364-A
DRAWING NUMBER:	S-220

Autodesk Docs://90388-000_Rye_Lake_Filtration/90388-000-WFP-S.rvt
2/20/2025 11:00:39 AM

NOTES:

1. * DENOTES CONCRETE ENCASED FRAMING. FOR CONCRETE ENCASED BEAMS, SEE DETAIL 7/S-302 UNLESS NOTED OTHERWISE. FOR CONCRETE ENCASED COLUMNS, SEE DETAIL 12/S-302, UNLESS NOTED OTHERWISE.
2. ALL STRUCTURAL STEEL THAT IS NOT ENCASED IN CONCRETE SHALL BE GALVANIZED.
3. FOR COLUMN CAP PLATE, SEE DETAIL 14/S-303, UNLESS NOTED OTHERWISE.

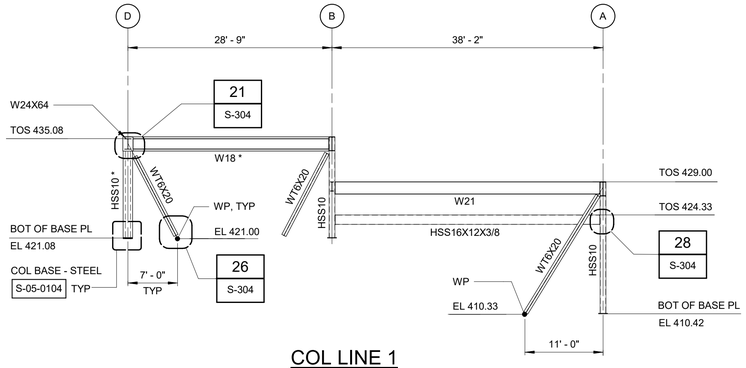

COL LINE 1
3/32" = 1'-0"

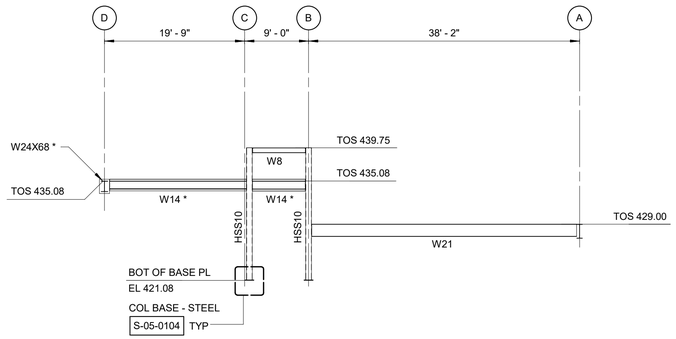

COL LINE 1.3
3/32" = 1'-0"

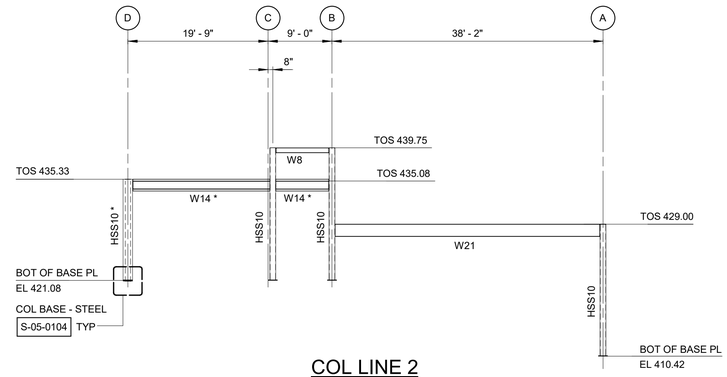

COL LINE 2
3/32" = 1'-0"

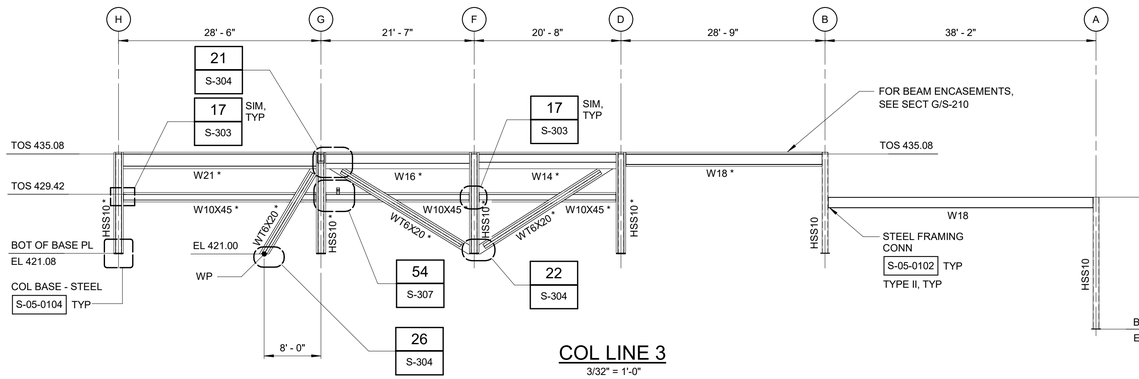

COL LINE 3
3/32" = 1'-0"

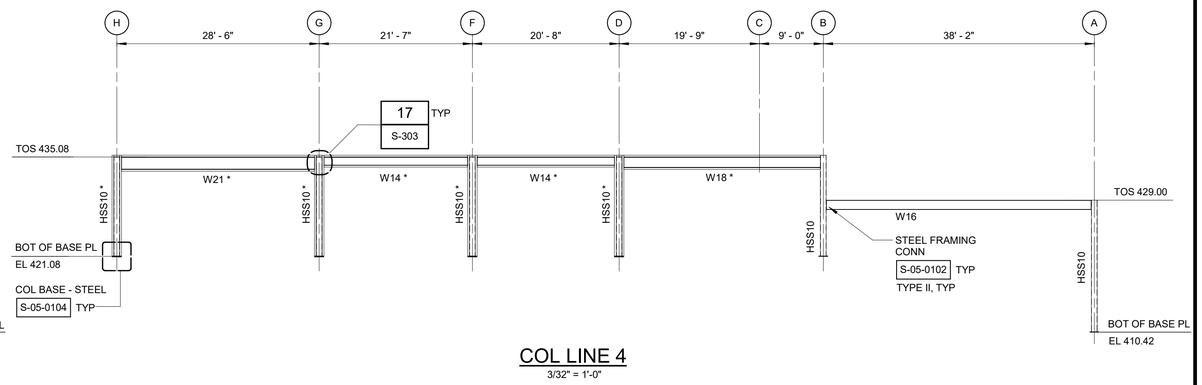

COL LINE 4
3/32" = 1'-0"

WARNING
IT IS A VIOLATION OF SECTION 7209.2 OF THE NEW YORK STATE EDUCATION LAW FOR ANY PERSON, UNLESS ACTING UNDER THE DIRECTION OF A LICENSED PROFESSIONAL ENGINEER, TO ALTER IN ANY WAY PLANS, SPECIFICATIONS, PLATS OR REPORTS TO WHICH THE SEAL OF A PROFESSIONAL ENGINEER HAS BEEN APPLIED. IF AN ITEM BEARING THE SEAL OF A PROFESSIONAL ENGINEER IS ALTERED, THE ALTERING ENGINEER SHALL AFFIX TO THE ITEM HIS SEAL AND THE NOTATION "ALTERED BY" FOLLOWED BY HIS SIGNATURE, THE DATE, AND A SPECIFIC DESCRIPTION OF THE ALTERATION.

3/32" = 1'-0" 10 8 6 4 2 0 11'

REV	ISSUED FOR	DATE	BY

PROJECT ENGINEER:	R. FROST
DESIGNED BY:	J. EDER
DRAWN BY:	R. HERNANDEZ
CHECKED BY:	C. PHILLIPS
IF THIS BAR DOES NOT MEASURE 1" THEN DRAWING IS NOT TO FULL SCALE	0 1/2" 1"

BID SET

STATE OF NEW YORK · JC EDER · 097035 · LICENSED PROFESSIONAL ENGINEER

Hazen
HAZEN AND SAWYER
498 SEVENTH AVENUE, 11th FLOOR
NEW YORK, NEW YORK 10018

WESTCHESTER JOINT WATER WORKS
MAMARONECK, NY

RYE LAKE WATER FILTRATION PLANT
HARRISON, NY

FILTRATION PLANT
STRUCTURAL
FRAMING ELEVATIONS - SHEET 4

DATE:	FEB 2025
HAZEN NO.:	90388-000
CONTRACT NO.:	A1364-A
DRAWING NUMBER:	S-221

Autodesk Docs://90388-000_Rye_Lake_Filtration/90388-000-WFP-S.rvt
2/20/2025 11:00:41 AM

NOTES:

1. * DENOTES CONCRETE ENCASED FRAMING. FOR CONCRETE ENCASED BEAMS, SEE DETAIL 7/S-302 UNLESS NOTED OTHERWISE. FOR CONCRETE ENCASED COLUMNS, SEE DETAIL 12/S-302, UNLESS NOTED OTHERWISE.
2. SLOPE OF BEAM ENCASEMENT SHALL MATCH TOP OF BEAM ENCASEMENT AT COLUMN 6 BETWEEN COLUMN LINES H AND G.
3. ALL STRUCTURAL STEEL THAT IS NOT ENCASED IN CONCRETE SHALL BE GALVANIZED.
4. FOR COLUMN CAP PLATE, SEE DETAIL 14/S-303, UNLESS NOTED OTHERWISE.

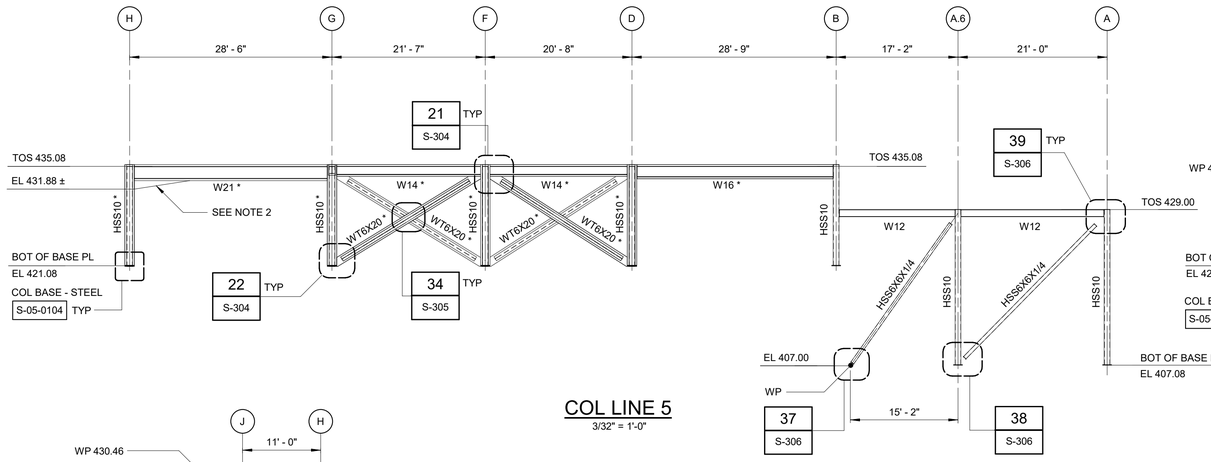

COL LINE 5
3/32" = 1'-0"

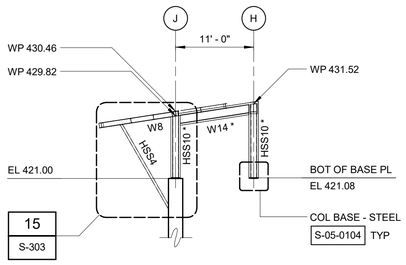

COL LINE 6.8
3/32" = 1'-0"

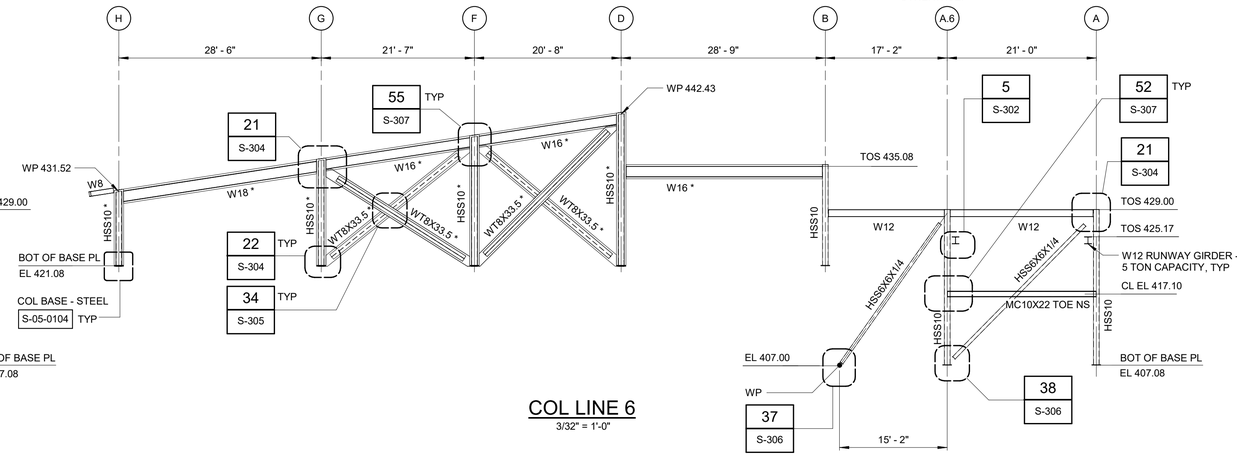

COL LINE 6
3/32" = 1'-0"

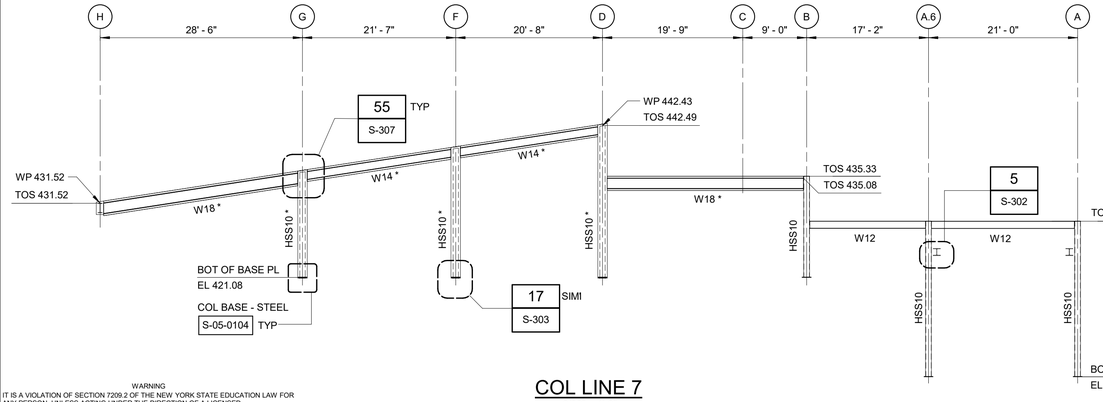

COL LINE 7
3/32" = 1'-0"

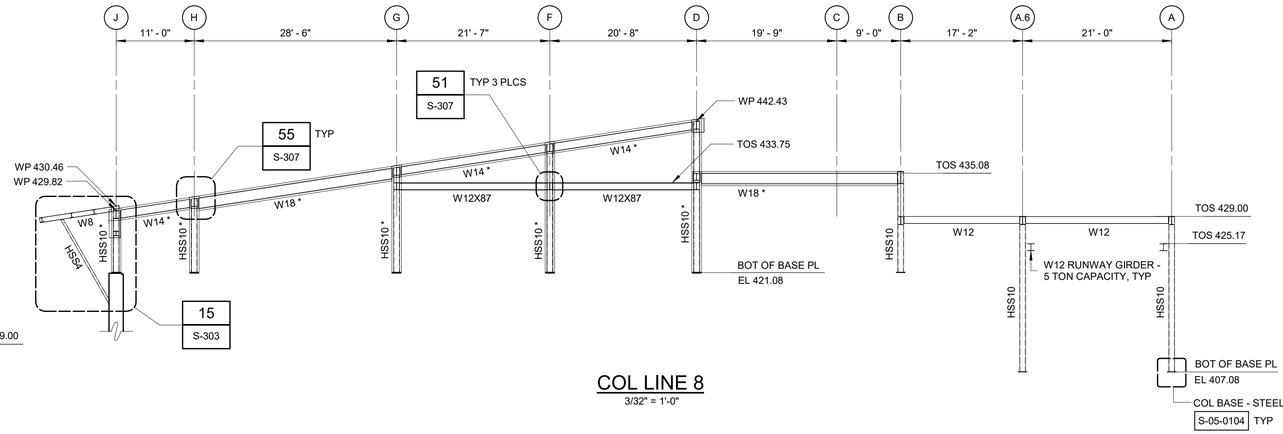

COL LINE 8
3/32" = 1'-0"

3/32" = 1'-0" 10 8 6 4 2 0 11'

WARNING
IT IS A VIOLATION OF SECTION 7209.2 OF THE NEW YORK STATE EDUCATION LAW FOR ANY PERSON, UNLESS ACTING UNDER THE DIRECTION OF A LICENSED PROFESSIONAL ENGINEER, TO ALTER IN ANY WAY PLANS, SPECIFICATIONS, PLATS OR REPORTS TO WHICH THE SEAL OF A PROFESSIONAL ENGINEER HAS BEEN APPLIED. IF AN ITEM BEARING THE SEAL OF A PROFESSIONAL ENGINEER IS ALTERED, THE ALTERING ENGINEER SHALL AFFIX TO THE ITEM HIS SEAL AND THE NOTATION "ALTERED BY" FOLLOWED BY HIS SIGNATURE, THE DATE, AND A SPECIFIC DESCRIPTION OF THE ALTERATION.

REV	ISSUED FOR	DATE	BY

PROJECT ENGINEER:	R. FROST
DESIGNED BY:	J. EDER
DRAWN BY:	R. HERNANDEZ
CHECKED BY:	C. PHILLIPS

IF THIS BAR DOES NOT MEASURE 1" THEN DRAWING IS NOT TO FULL SCALE 0 1/2" 1"

BID SET

STATE OF NEW YORK · JC EDER · 097035 · LICENSED PROFESSIONAL ENGINEER

Hazen
HAZEN AND SAWYER
498 SEVENTH AVENUE, 11th FLOOR
NEW YORK, NEW YORK 10018

WESTCHESTER JOINT WATER WORKS
MAMARONECK, NY

RYE LAKE WATER FILTRATION PLANT
HARRISON, NY

FILTRATION PLANT
STRUCTURAL
FRAMING ELEVATIONS - SHEET 5

DATE:	FEB 2025
HAZEN NO.:	90388-000
CONTRACT NO.:	A1364-A
DRAWING NUMBER:	S-222

Autodesk Docs://90388-000_Rye_Lake_Filtration/90388-000-WFP-S.rvt
2/20/2025 11:00:43 AM

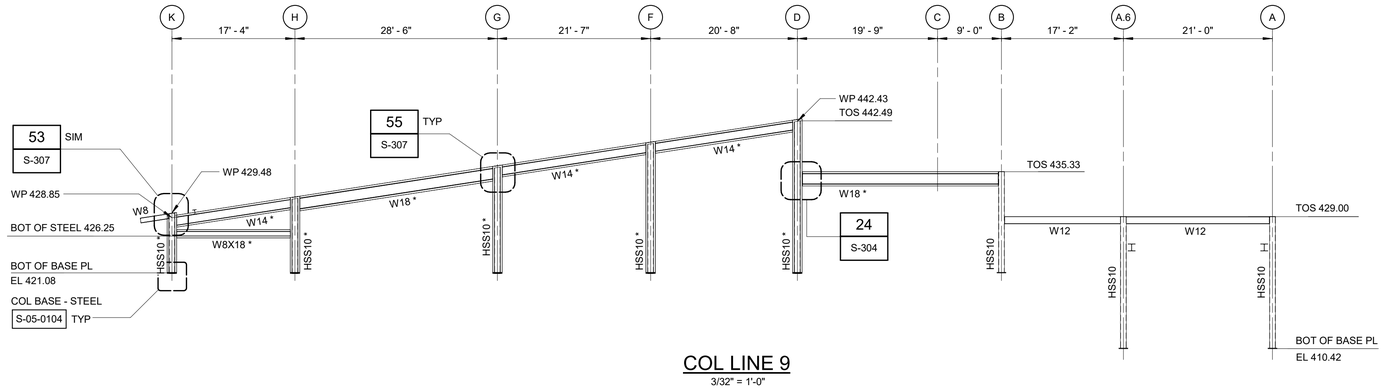

COL LINE 9

3/32" = 1'-0"

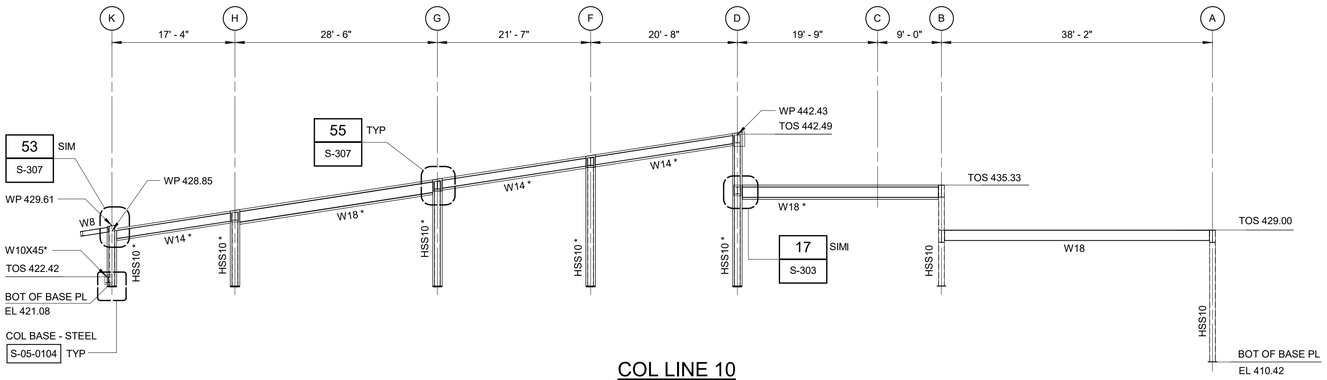

COL LINE 10

3/32" = 1'-0"

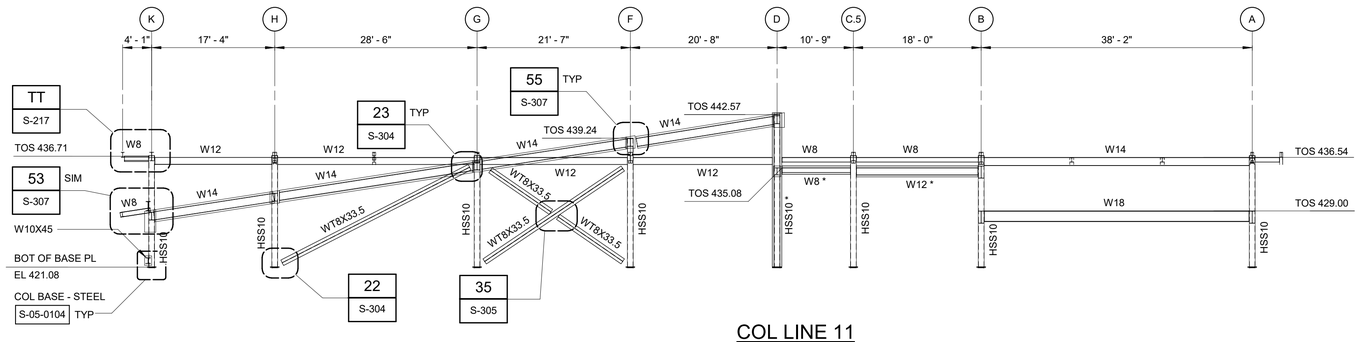

COL LINE 11

3/32" = 1'-0"

NOTES:

1. * DENOTES CONCRETE ENCASED FRAMING. FOR CONCRETE ENCASED BEAMS, SEE DETAIL 7/S-302 UNLESS NOTED OTHERWISE. FOR CONCRETE ENCASED COLUMNS, SEE DETAIL 12/S-302, UNLESS NOTED OTHERWISE.
2. SLOPE OF BEAM ENCASEMENT SHALL MATCH TOP OF BEAM ENCASEMENT AT COLUMN 6 BETWEEN COLUMN LINES H AND G.
3. ALL STRUCTURAL STEEL THAT IS NOT ENCASED IN CONCRETE SHALL BE GALVANIZED.
4. FOR COLUMN CAP PLATE, SEE DETAIL 14/S-303, UNLESS NOTED OTHERWISE.

WARNING
IT IS A VIOLATION OF SECTION 7209.2 OF THE NEW YORK STATE EDUCATION LAW FOR ANY PERSON, UNLESS ACTING UNDER THE DIRECTION OF A LICENSED PROFESSIONAL ENGINEER, TO ALTER IN ANY WAY PLANS, SPECIFICATIONS, PLATS OR REPORTS TO WHICH THE SEAL OF A PROFESSIONAL ENGINEER HAS BEEN APPLIED. IF AN ITEM BEARING THE SEAL OF A PROFESSIONAL ENGINEER IS ALTERED, THE ALTERING ENGINEER SHALL AFFIX TO THE ITEM HIS SEAL AND THE NOTATION "ALTERED BY" FOLLOWED BY HIS SIGNATURE, THE DATE, AND A SPECIFIC DESCRIPTION OF THE ALTERATION.

3/32" = 1'-0" 10 8 6 4 2 0 11'

REV	ISSUED FOR	DATE	BY

PROJECT ENGINEER:	R. FROST
DESIGNED BY:	J. EDER
DRAWN BY:	R. HERNANDEZ
CHECKED BY:	C. PHILLIPS
IF THIS BAR DOES NOT MEASURE 1" THEN DRAWING IS NOT TO FULL SCALE	0 1/2" 1"

BID SET

STATE OF NEW YORK · JC. EDER · 097035 · LICENSED PROFESSIONAL ENGINEER

Hazen

HAZEN AND SAWYER
498 SEVENTH AVENUE, 11th FLOOR
NEW YORK, NEW YORK 10018

WESTCHESTER JOINT WATER WORKS
MAMARONECK, NY

RYE LAKE WATER FILTRATION PLANT
HARRISON, NY

FILTRATION PLANT
STRUCTURAL
FRAMING ELEVATIONS - SHEET 6

DATE:	FEB 2025
HAZEN NO.:	90388-000
CONTRACT NO.:	A1364-A
DRAWING NUMBER:	S-223

Autodesk Docs://90388-000_Rye_Lake_Filtration/90388-000-WFP-S.rvt
2/20/2025 11:00:44 AM

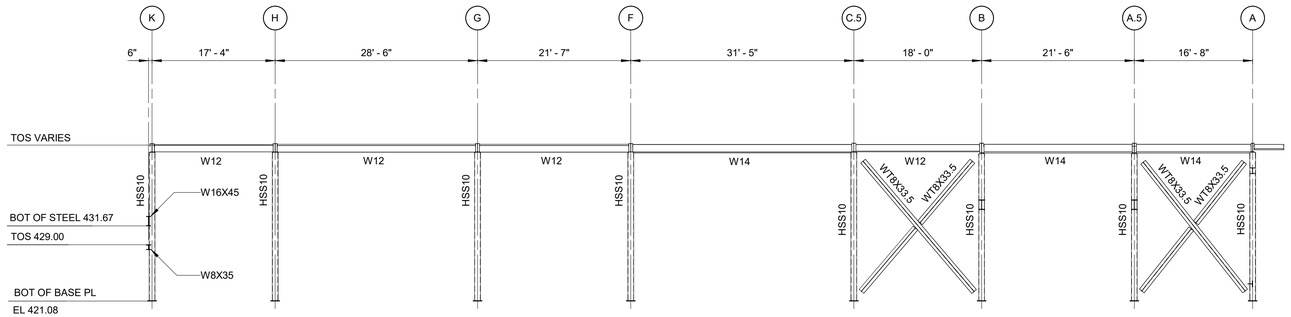

COL LINE 12

3/32" = 1'-0"

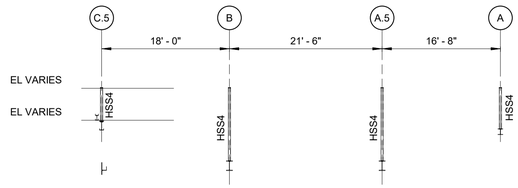

COL LINE 12.3

3/32" = 1'-0"

NOTES:

1. * DENOTES CONCRETE ENCASED FRAMING. FOR CONCRETE ENCASED BEAMS, SEE DETAIL 7/S-302 UNLESS NOTED OTHERWISE. FOR CONCRETE ENCASED COLUMNS, SEE DETAIL 12/S-302, UNLESS NOTED OTHERWISE.
2. SLOPE OF BEAM ENCASEMENT SHALL MATCH TOP OF BEAM ENCASEMENT AT COLUMN 6 BETWEEN COLUMN LINES H AND G.
3. ALL STRUCTURAL STEEL THAT IS NOT ENCASED IN CONCRETE SHALL BE GALVANIZED.
4. FOR COLUMN CAP PLATE, SEE DETAIL 14/S-303, UNLESS NOTED OTHERWISE.

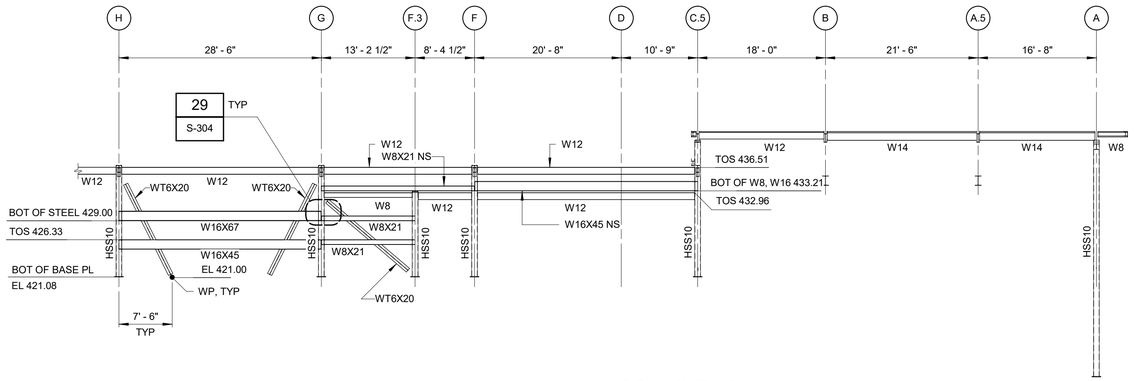

COL LINE 13

3/32" = 1'-0"

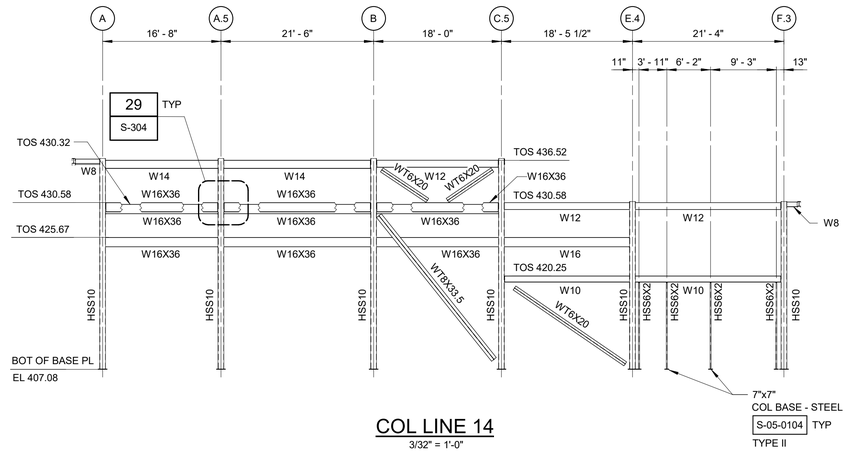

COL LINE 14

3/32" = 1'-0"

WARNING
IT IS A VIOLATION OF SECTION 7209.2 OF THE NEW YORK STATE EDUCATION LAW FOR ANY PERSON, UNLESS ACTING UNDER THE DIRECTION OF A LICENSED PROFESSIONAL ENGINEER, TO ALTER IN ANY WAY PLANS, SPECIFICATIONS, PLATS OR REPORTS TO WHICH THE SEAL OF A PROFESSIONAL ENGINEER HAS BEEN APPLIED. IF AN ITEM BEARING THE SEAL OF A PROFESSIONAL ENGINEER IS ALTERED, THE ALTERING ENGINEER SHALL AFFIX TO THE ITEM HIS SEAL AND THE NOTATION "ALTERED BY" FOLLOWED BY HIS SIGNATURE, THE DATE, AND A SPECIFIC DESCRIPTION OF THE ALTERATION.

3/32" = 1'-0" 10 8 6 4 2 0 11'

REV	ISSUED FOR	DATE	BY

PROJECT ENGINEER:	R. FROST
DESIGNED BY:	J. EDER
DRAWN BY:	R. HERNANDEZ
CHECKED BY:	C. PHILLIPS
IF THIS BAR DOES NOT MEASURE 1" THEN DRAWING IS NOT TO FULL SCALE	0 1/2" 1"

BID SET

STATE OF NEW YORK · JC EDER · 097035 · LICENSED PROFESSIONAL ENGINEER

Hazen

HAZEN AND SAWYER
498 SEVENTH AVENUE, 11th FLOOR
NEW YORK, NEW YORK 10018

WESTCHESTER JOINT WATER WORKS
MAMARONECK, NY

RYE LAKE WATER FILTRATION PLANT
HARRISON, NY

FILTRATION PLANT
STRUCTURAL
FRAMING ELEVATIONS - SHEET 7

DATE:	FEB 2025
HAZEN NO.:	90388-000
CONTRACT NO.:	A1364-A
DRAWING NUMBER:	S-224

Autodesk Docs://90388-000_Rye_Lake_Filtration/90388-000-WFP-S.rvt
2/20/2025 11:00:45 AM

BEAM SCHEDULE

MARK	COUNT	SPAN TYPE	SIZE		TOP EL	MAIN REINF		ADDL REINF			S1 STIRRUPS		S2 STIRRUPS		REMARKS
			W"	D"		TOP	BOT	A	B	C	SIZE	SPACING	SIZE	SPACING	
LB-1	2	END	24"	24"	398.83			-	-	-					
LB-2	1	INT	24"	24"	398.83			-	-	-					
B-1	4	SIMP	24"	36"	407.00	5-#10	10-#10	-	-	-	#4	6"	#4	6"	PLACE BOTTOM REINF IN TWO LAYERS
B-2	1	SIMP	24"	36"	407.00	5-#10	10-#10	-	-	-	#4	6"	#4	6"	
B-3	2	END	12"	18"	407.00	3-#6	3-#6	-	-	-	#4	8"	#4	8"	
B-4	3	INT	12"	18"	407.00	3-#6	3-#6	-	-	-	#4	8"	#4	8"	
B-6	8	SIMP	24"	40"	407.00	8-#9	16-#9	-	-	-	#4	6"	#4	6"	PLACE BOTTOM REINF IN TWO LAYERS
B-9	2	END	24"	36"	407.00	6-#9	6-#9	5-#9	5-#9	-	2-#4	6"	2-#4	7"	PLACE TOP AND BOTTOM REINF IN TWO LAYERS, DOUBLE STIRRUPS, SEE DETAIL 57
B-10	1	INT	24"	36"	407.00	6-#9	6-#9	5-#9	5-#9	-	#4	5"	#4	5"	PLACE TOP AND BOTTOM REINF IN TWO LAYERS
B-11	2	SIMP	12"	24"	407.00	3-#8	3-#8	-	-	-	#4	9"	#4	9"	
B-12	1	SIMP	24"	24"	407.00	4-#8	4-#8	-	-	-	#4	9"	#4	9"	
B-13	4	SIMP	24"	36"	407.00	5-#9	10-#9	-	-	-	#4	6"	#4	6"	
B-14	2	END	24"	36"	407.00	5-#10	5-#10	4-#10	4-#10	-	#4	3"	#4	5"	PLACE BOTTOM REINF IN TWO LAYERS
B-15	1	SIMP	30"	36"	407.00	6-#9	9-#10	-	-	-	#4	6"	#4	6"	
B-16	1	SIMP	24"	36"	407.00	5-#10	5-#10	-	-	-	#4	8"	#4	8"	
B-17	1	SIMP	12"	24"	VARIES	3-#6	3-#6	-	-	-	#4	10"	#4	10"	
B-18	2	SIMP	18"	24"	407.00	3-#7	3-#7	-	-	-	#4	8"	#4	8"	
B-19	2	END	24"	36"	407.00	3-#9	3-#9	2-#9	-	-	#4	6"	#4	12"	
B-20	2	END	24"	36"	407.00	4-#9	3-#9	4-#9	2-#9	-	#4	5"	#4	5"	
B-21	4	SIMP	24"	36"	VARIES	4-#6	10-#9	-	-	-	#4	3.5"	#4	4.5"	PLACE BOTTOM REINF IN TWO LAYERS
B-22	4	INT	24"	36"	407.00	3-#9	3-#9	2-#9	2-#9	-	#4	6"	#4	12"	
B-23	1	END	24"	18"	407.00	3-#9	3-#9	-	-	-	#4	8"	#4	8"	
B-24	3	END	24"	24"	407.00	6-#8	6-#8	-	-	-	#4	10"	#4	10"	
B-25	3	SIMP	12"	18"	407.00	2-#6	2-#6	-	-	-	#4	8"	#4	8"	
B-26	3	SIMP	24"	24"	407.00	4-#8	4-#8	-	-	-	#4	10"	#4	10"	
B-27	2	SIMP	30"	36"	407.00	4-#8	6-#8	-	-	-	#4	10"	#4	12"	
B-28	8	SIMP	24"	24"	406.50	4-#8	4-#8	-	-	-	#4	10"	#4	12"	
B-29	2	SIMP	24"	24"	406.50	5-#6	5-#6	-	-	-	#4	11"	#4	11"	
B-30	6	SIMP	24"	24"	406.50	4-#6	4-#6	-	-	-	#4	11"	#4	11"	
B-31	1	END	24"	62"	406.50	6-#9	6-#9				#4	9"	#4	9"	
B-32	1	SIMP	24"	62"	406.50	8-#9	8-#9	-	-	-	#4	6"	#4	6"	
B-33	3	SIMP	24"	36"	406.50	9-#9	9-#9	-	-	-	#4	9"	#4	9"	DOUBLE STIRRUPS, SEE DETAIL 57
B-34	1	SIMP	18"	24"	406.50	5-#9	5-#9				#4	10"	#4	10"	
B-35	4	SIMP	18"	18"	406.50	4-#9	4-#9	-	-	-	#4	12"	#4	12"	
B-36	1	SIMP	32"	62"	406.50	7-#9	7-#9	-	-	-	#4	12"	#4	12"	
B-37	3	END	32"	26"	406.50	4-#8	4-#8	-	-	-	#4	12"	#4	12"	
B-38	1	SIMP	24"	42"	406.50	6-#9	6-#9				#4	6"	#4	6"	
B-39	1	INT	24"	36"	406.50	6-#9	6-#9	-	-	-	#4	5"	#4	5"	
SB-1	1	SIMP	24"	24"	421.00	8-#9	6-#8	-	-	-	2-#4	5"	2-#4	5"	DOUBLE STIRRUPS, SEE DETAIL 57
SB-2	1	SIMP	24"	24"	421.00	8-#9	6-#8	-	-	-	#4	10"	#4	10"	
SB-3	1	SIMP	24"	30"	421.00	6-#9	6-#8	-	6-#9	-	#4	8"	#4	8"	PLACE BOTTOM REINF IN TWO LAYERS
SB-4	28	INT	15"	18"	421.00	6-#8	6-#8	-	-	-	#4	6"	#4	6"	
SB-5	4	SIMP	15"	18"	421.00	6-#8	6-#8	-	-	-	#4	6"	#4	6"	
SB-6	1	SIMP	24"	36"	421.00	8-#8	8-#9	-	8-#9	-	#4	4"	#4	4"	PLACE BOTTOM REINF IN TWO LAYERS, DOUBLE STIRRUPS, SEE DETAIL 57
SB-7	4	END	24"	24"	421.00	8-#9	8-#9	3-#9	3-#9	-	#4	6"	#4	6"	PLACE TOP AND BOTTOM REINF IN TWO LAYERS, DOUBLE STIRRUPS, SEE DETAIL 57
SB-8	4	INT	24"	24"	421.00	8-#9	8-#9	3-#9	3-#9	-	#4	4"	#4	4"	
SB-9	2	SIMP	18"	24"	421.00	6-#9	6-#9	-	-	-	#4	10"	#4	10"	
SB-10	1	SIMP	18"	24"	421.00	4-#9	4-#9	-	-	-	#4	10"	#4	10"	
SB-11	18	SIMP	24"	24"	421.00	8-#9	8-#9	-	8-#9	-	#4	5"	#4	5"	PLACE BOTTOM REINF IN TWO LAYERS
SB-12	2	END	24"	24"	421.00	8-#9	8-#9	-	4-#9	-	#4	5"	#4	10"	PLACE BOTTOM REINF IN TWO LAYERS
SB-13	12	SIMP	12"	15"	421.00	6-#6	6-#6	-	-	-	#4	6"	#4	6"	
SB-14	4	END	15"	18"	421.00	6-#6	6-#6	-	-	-	#4	6"	#4	6"	
SB-15	2	SIMP	12"	16"	421.00	4-#8	4-#8	-	-	-	#4	10"	#4	10"	
SB-16	2	SIMP	24"	24"	421.00	5-#8	5-#8	-	-	-	#4	10"	#4	10"	
SB-17	1	SIMP	27"	24"	421.00	4-#8	4-#8	-	-	-	#4	10"	#4	10"	
SB-18	2	END	24"	16"	421.00	4-#6	4-#6	-	-	-	#4	6"	#4	6"	
SB-20	1	END	24"	30"	421.00	6-#9	12-#9	6-#9	-	-	#4	6"	#4	6"	PLACE TOP AND BOTTOM REINF IN TWO LAYERS
SB-21	1	SIMP	24"	24"	421.00	4-#8	8-#8	-	-	-	#4	10"	#4	10"	
SB-22	1	SIMP	24"	24"	421.00	4-#8	8-#8	-	-	-	#4	10"	#4	10"	
SB-23	6	INT	24"	24"	421.00	11-#9	11-#9	-	-	-	#4	3"	#4	5"	PLACE TOP AND BOTTOM REINF IN TWO LAYERS
SB-24	1	SIMP	8"	18"	421.00	2-#6	2-#6	-	-	-	#4	8"	#4	8"	
SB-25	1	SIMP	12"	18"	421.00	3-#6	3-#6	-	-	-	#4	8"	#4	8"	
SB-26	1	END	24"	24"	421.00	6-#9	11-#9	5-#9	-	-	#4	6"	#4	6"	PLACE TOP AND BOTTOM REINF IN TWO LAYERS
SB-27	4	SIMP	12"	18"	421.00	3-#6	3-#6	-	-	-	#4	8"	#4	8"	
SB-28	3	END	24"	28"	421.00	6-#9	11-#9	5-#9	-	-	#4	5"	#4	5"	PLACE TOP AND BOTTOM REINF IN TWO LAYERS
SB-29	1	END	24"	24"	421.00	6-#9	11-#9	5-#9	-	-	#4	6"	#4	6"	
SB-30	2	END	18"	18"	421.00	5-#8	5-#8	-	-	-	#4	8"	#4	8"	
SB-31	1	SIMP	24"	18"	421.00	5-#8	5-#5	-	-	-	#4	8"	#4	8"	
SB-32	1	END	24"	24"	421.00	6-#8	6-#8	-	-	-	#4	6"	#4	11"	FOR BEAM DETAIL, SEE S-119
SB-33	1	SIMP	24"	12"	421.00	2-#5	2-#5	-	-	-	#4	5"	#4	5"	
SB-34	1	SIMP	24"	24"	421.00	3-#6	3-#6				#4	10"	#4	10"	
SB-35	4	END	24"	24"	421.00	6-#8	6-#8	-	-	-	#4	11"	#4	11"	
SB-36	2	END	24"	24"	421.00	10-#9	10-#9	-	-	-	#4	7"	#4	7"	PLACE TOP AND BOTTOM REINF IN TWO LAYERS
SB-37	1	END	24"	24"	421.00	8-#9	8-#9	-	8-#9	-	#4	4"	#4	4"	
SB-38	2	SIMP	24"	24"	421.00	5-#9	11-#9	-	-	-	#4	5"	#4	5"	
SB-40	2	END	24"	24"	421.00	8-#8	8-#9	-	-	-	2-#4	5"	2-#4	5"	DOUBLE STIRRUPS, SEE DETAIL 57

NOTE:
1. SEE STANDARD DETAIL S-03-1001 FOR TYPICAL BEAM ELEVATIONS.

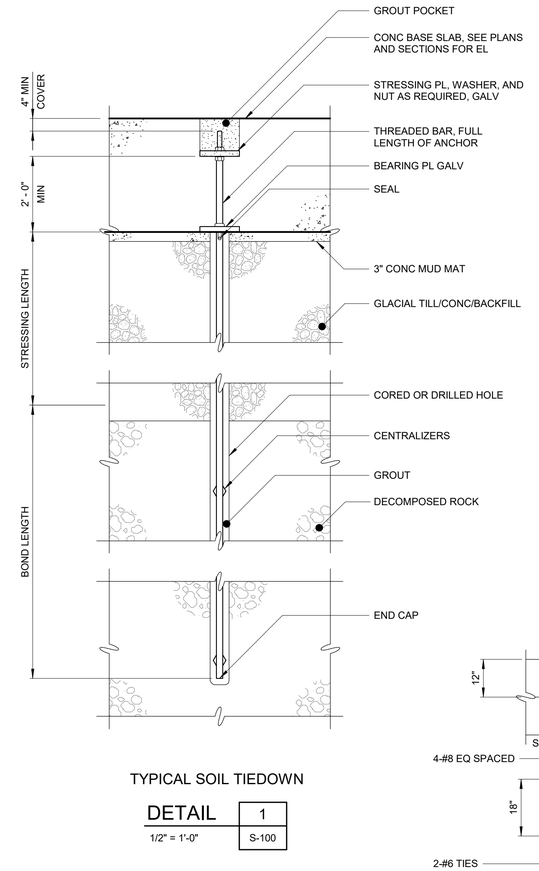

TYPICAL SOIL TIEDOWN

DETAIL 1 — 1/2" = 1'-0" — S-100

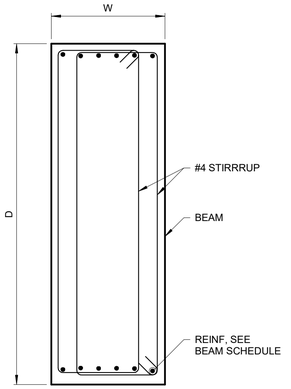

DETAIL 57 — 3/4" = 1'-0" — S-300

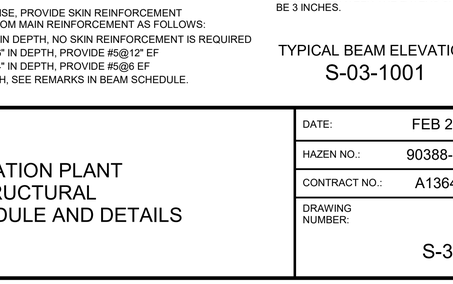

DETAIL 58 — 1/2" = 1'-0" — S-206

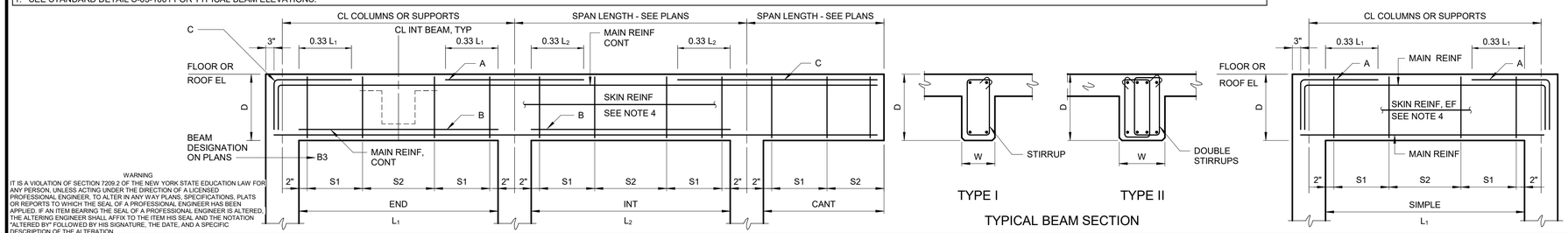

TYPE I TYPE II

TYPICAL BEAM SECTION

1. WHERE BEAMS FRAME INTO CONCRETE WALLS, WALLS SHALL BE BLOCKED OUT FULL HEIGHT AND WIDTH OF BEAM TO PROVIDE A MINIMUM 8" SEAT FOR BEAM BEARING. WALL REINFORCEMENT SHALL NOT BE INTERRUPTED THROUGH BLOCKOUT.
2. S1 = 2x"D" FOR STIRRUP SPACING SEE BEAM SCHEDULE
3. CONTINUOUS BOTTOM BARS IN ALL BEAMS MAY BE SPLICED AT COLUMN CENTERLINES. CONTINUOUS TOP BARS MAY BE SPLICED AT MID-SPAN.
4. UNLESS NOTED OTHERWISE, PROVIDE SKIN REINFORCEMENT BETWEEN TOP AND BOTTOM MAIN REINFORCEMENT AS FOLLOWS:
   FOR BEAMS 18" OR LESS IN DEPTH, NO SKIN REINFORCEMENT IS REQUIRED
   FOR BEAMS >18" THRU 36" IN DEPTH, PROVIDE #5@12" EF
   FOR BEAMS >36" THRU 84" IN DEPTH, PROVIDE #5@6 EF
   FOR BEAMS >84" IN DEPTH, SEE REMARKS IN BEAM SCHEDULE.
5. ALL STIRRUPS SHALL BE CLOSED TIES, TYPE T1, (ACI 315)
6. SEE DRAWINGS FOR BEAM ELEVATION DIAGRAMS SPECIFICALLY REFERRED TO IN THE BEAM SCHEDULES.
7. WHEN TWO LAYERS OF FLEXURAL REINFORCEMENT ARE REQUIRED THE SPACING BETWEEN THE LAYERS SHALL BE 3 INCHES.

TYPICAL BEAM ELEVATION
S-03-1001

WARNING
IT IS A VIOLATION OF SECTION 7209.2 OF THE NEW YORK STATE EDUCATION LAW FOR ANY PERSON, UNLESS ACTING UNDER THE DIRECTION OF A LICENSED PROFESSIONAL ENGINEER, TO ALTER IN ANY WAY PLANS, SPECIFICATIONS, PLATS OR REPORTS TO WHICH THE SEAL OF A PROFESSIONAL ENGINEER HAS BEEN AFFIXED. IF AN ITEM BEARING THE SEAL OF A PROFESSIONAL ENGINEER IS ALTERED, THE ALTERING ENGINEER SHALL AFFIX TO THE ITEM HIS SEAL AND THE NOTATION "ALTERED BY" FOLLOWED BY HIS SIGNATURE, THE DATE, AND A SPECIFIC DESCRIPTION OF THE ALTERATION.

NOTES

REV	ISSUED FOR	DATE	BY

PROJECT ENGINEER: R. FROST
DESIGNED BY: J. EDER
DRAWN BY: R. HERNANDEZ
CHECKED BY: C. PHILLIPS

IF THIS BAR DOES NOT MEASURE 1" THEN DRAWING IS NOT TO FULL SCALE 0 1/2" 1"

BID SET

STATE OF NEW YORK · JC EDER · 097035 · LICENSED PROFESSIONAL ENGINEER

Hazen

HAZEN AND SAWYER
498 SEVENTH AVENUE, 11th FLOOR
NEW YORK, NEW YORK 10018

WESTCHESTER JOINT WATER WORKS
MAMARONECK, NY

RYE LAKE WATER FILTRATION PLANT
HARRISON, NY

FILTRATION PLANT
STRUCTURAL
BEAM SCHEDULE AND DETAILS

DATE: FEB 2025
HAZEN NO.: 90388-000
CONTRACT NO.: A1364-A
DRAWING NUMBER: S-300

Autodesk Docs://90388-000_Rye_Lake_Filtration/90388-000-WFP-S.rvt
2/20/2025 11:00:47 AM

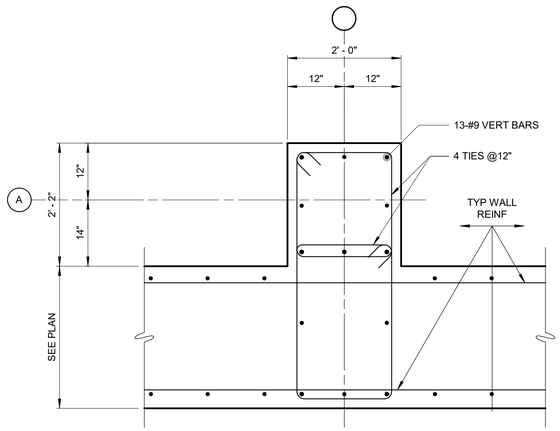

TYPE I

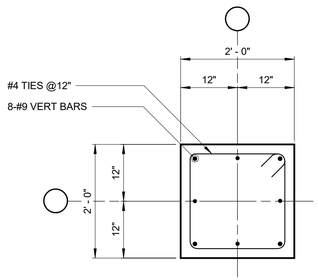

TYPE II

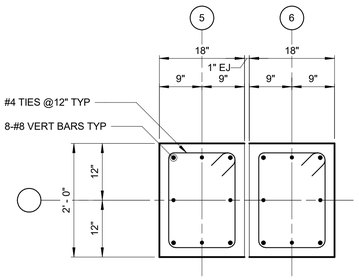

TYPE III

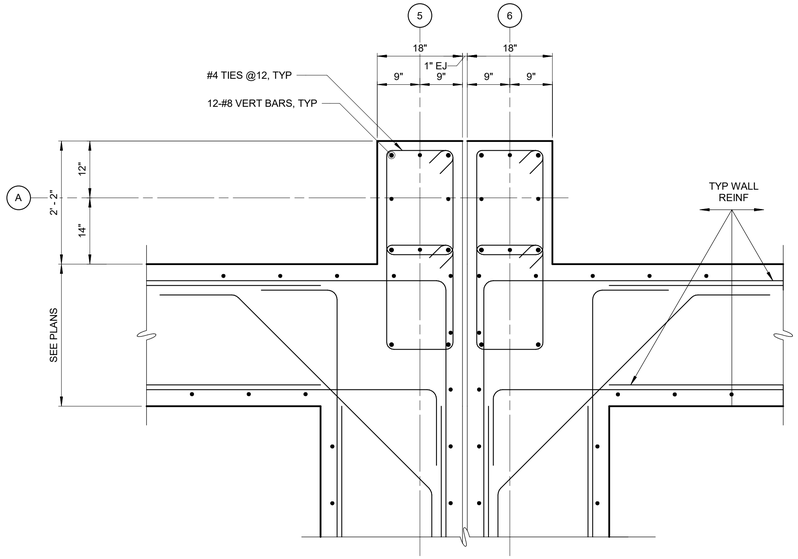

TYPE IV

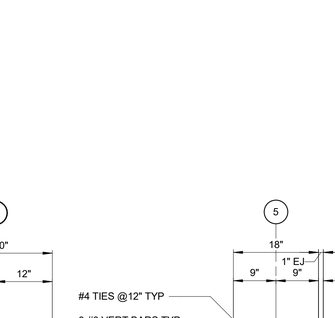

TYPE V

DETAIL 3
3/4" = 1'-0"
S-102

NOTE:
FOR COLUMN ELEVATION DETAILS, SEE DET S-03-0802

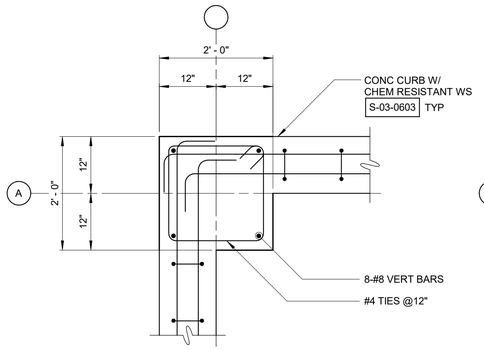

TYPE I

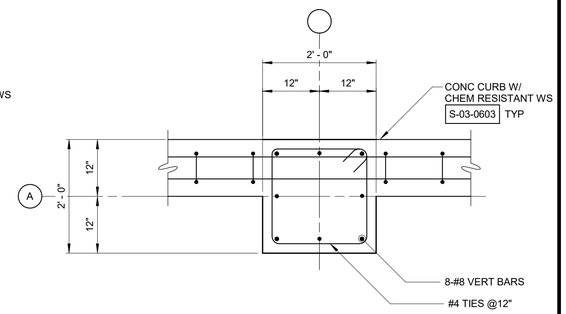

TYPE II

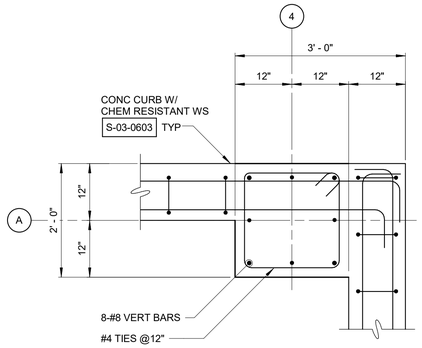

TYPE III

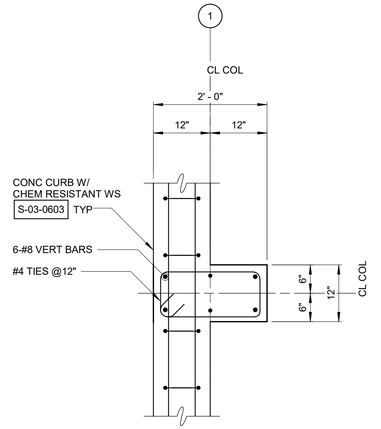

TYPE IV

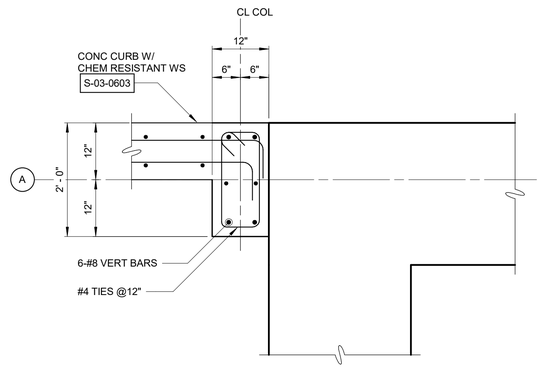

TYPE V

DETAIL 4
3/4" = 1'-0"
S-108

NOTE:
FOR COLUMN ELEVATION DETAILS, SEE DET S-03-0802

3/4" = 1'-0"
6" 0 1 2'

WARNING
IT IS A VIOLATION OF SECTION 7209.2 OF THE NEW YORK STATE EDUCATION LAW FOR ANY PERSON, UNLESS ACTING UNDER THE DIRECTION OF A LICENSED PROFESSIONAL ENGINEER, TO ALTER IN ANY WAY PLANS, SPECIFICATIONS, PLATS OR REPORTS TO WHICH THE SEAL OF A PROFESSIONAL ENGINEER HAS BEEN APPLIED. IF AN ITEM BEARING THE SEAL OF A PROFESSIONAL ENGINEER IS ALTERED, THE ALTERING ENGINEER SHALL AFFIX TO THE ITEM HIS SEAL AND THE NOTATION "ALTERED BY" FOLLOWED BY HIS SIGNATURE, THE DATE, AND A SPECIFIC DESCRIPTION OF THE ALTERATION.

REV	ISSUED FOR	DATE	BY

PROJECT ENGINEER:	R. FROST
DESIGNED BY:	J. EDER
DRAWN BY:	R. HERNANDEZ
CHECKED BY:	C. PHILLIPS
IF THIS BAR DOES NOT MEASURE 1" THEN DRAWING IS NOT TO FULL SCALE	0 1/2" 1"

BID SET

STATE OF NEW YORK · JC EDER · 097035 · LICENSED PROFESSIONAL ENGINEER

Hazen
HAZEN AND SAWYER
498 SEVENTH AVENUE, 11th FLOOR
NEW YORK, NEW YORK 10018

WESTCHESTER JOINT WATER WORKS
MAMARONECK, NY

RYE LAKE WATER FILTRATION PLANT
HARRISON, NY

FILTRATION PLANT
STRUCTURAL
DETAILS - SHEET 1

DATE:	FEB 2025
HAZEN NO.:	90388-000
CONTRACT NO.:	A1364-A
DRAWING NUMBER:	S-301

Autodesk Docs://90388-000_Rye_Lake_Filtration/90388-000-WFP-S.rvt
2/20/2025 11:00:50 AM

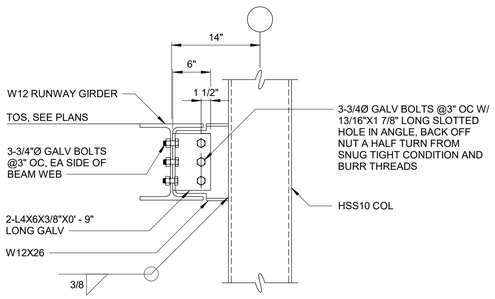

NOTE:
ALL FRAMING SHOWN ON THIS DETAIL SHALL BE GALVANIZED STEEL.

DETAIL 5
1" = 1'-0" S-115

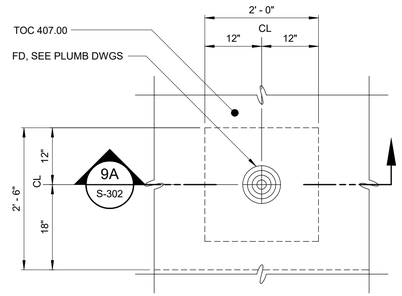

DETAIL 9
3/4" = 1'-0" S-108

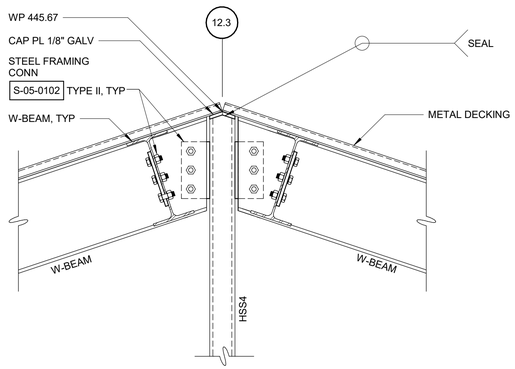

DETAIL 11
1" = 1'-0" S-218

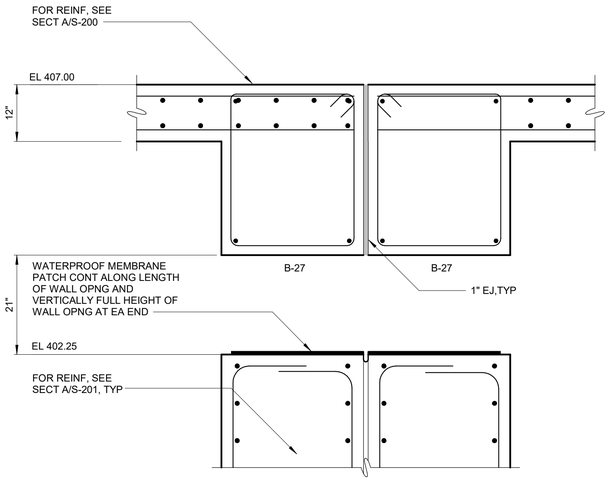

DETAIL 6
3/4" = 1'-0" S-200

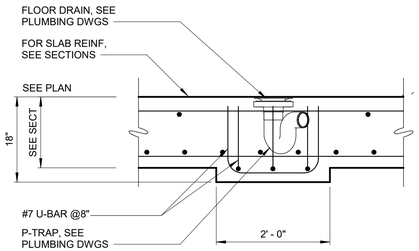

SECTION 9A
3/4" = 1'-0" S-302

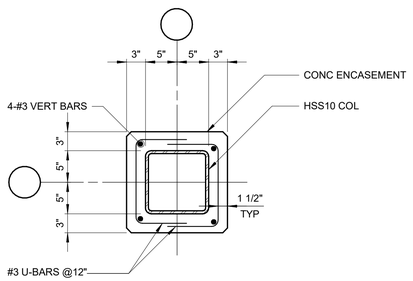

DETAIL 12
1" = 1'-0" S-114

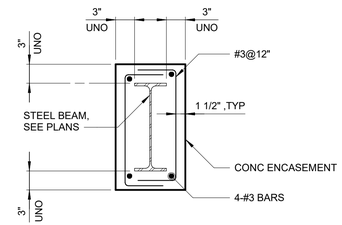

NOTE:
WHERE TOP ENCASEMENT SLOPES RELATIVE TO TOP OF BEAM, TOP OF ENCASEMENT SHALL ALIGN WITH BOTTOM OF PRECAST PRESTRESSED HOLLOW-CORE PLANKS.

DETAIL 7
1" = 1'-0" S-213

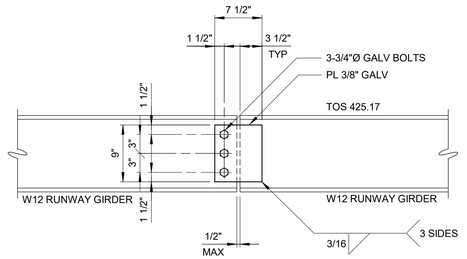

NOTE:
ALL FRAMING SHOWN ON THIS DETAIL SHALL BE GALVANIZED STEEL.

DETAIL 10
1" = 1'-0" S-115

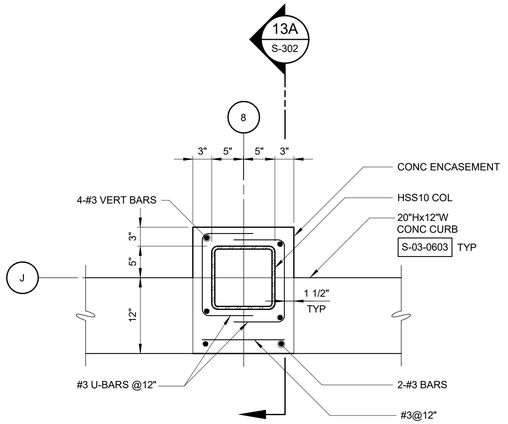

DETAIL 13
1" = 1'-0" S-114

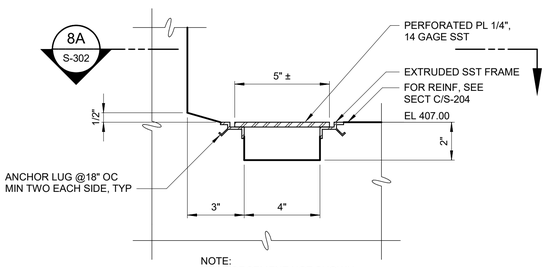

NOTE:
REINFORCEMENT NOT SHOWN FOR CLARITY.

DETAIL 8
3" = 1'-0" S-204

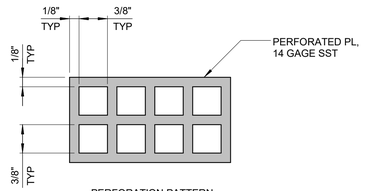

PERFORATION PATTERN

SECTION 8A
NTS S-302

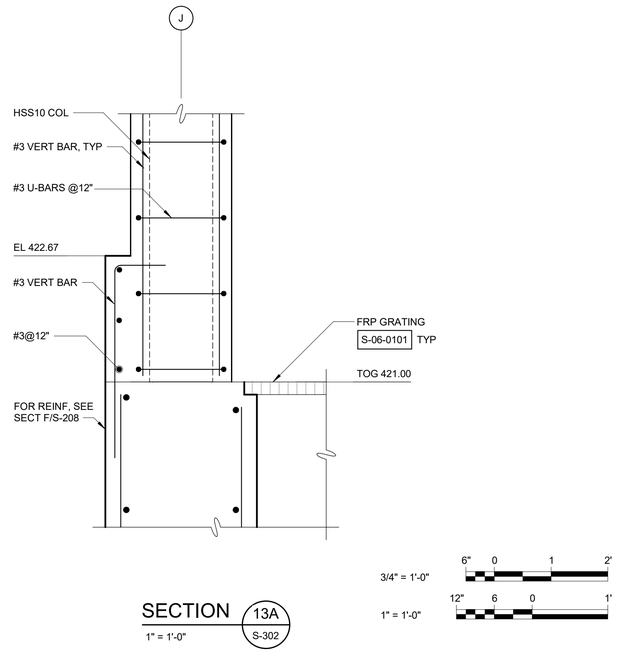

SECTION 13A
1" = 1'-0" S-302

3/4" = 1'-0" 6" 0 1 2'
1" = 1'-0" 12" 6 0 1'

NOTES:

1. ALL STRUCTURAL STEEL THAT IS NOT ENCASED IN CONCRETE SHALL BE GALVANIZED.

WARNING
IT IS A VIOLATION OF SECTION 7209.2 OF THE NEW YORK STATE EDUCATION LAW FOR ANY PERSON, UNLESS ACTING UNDER THE DIRECTION OF A LICENSED PROFESSIONAL ENGINEER, TO ALTER IN ANY WAY PLANS, SPECIFICATIONS, PLATS OR REPORTS TO WHICH THE SEAL OF A PROFESSIONAL ENGINEER HAS BEEN APPLIED. IF AN ITEM BEARING THE SEAL OF A PROFESSIONAL ENGINEER IS ALTERED, THE ALTERING ENGINEER SHALL AFFIX TO THE ITEM HIS SEAL AND THE NOTATION "ALTERED BY" FOLLOWED BY HIS SIGNATURE, THE DATE, AND A SPECIFIC DESCRIPTION OF THE ALTERATION.

REV	ISSUED FOR	DATE	BY

PROJECT ENGINEER:	R. FROST
DESIGNED BY:	J. EDER
DRAWN BY:	R. HERNANDEZ
CHECKED BY:	C. PHILLIPS

IF THIS BAR DOES NOT MEASURE 1" THEN DRAWING IS NOT TO FULL SCALE 0 1/2" 1"

BID SET

STATE OF NEW YORK · JC EDER · 097035 · LICENSED PROFESSIONAL ENGINEER

Hazen
HAZEN AND SAWYER
498 SEVENTH AVENUE, 11th FLOOR
NEW YORK, NEW YORK 10018

WESTCHESTER JOINT WATER WORKS
MAMARONECK, NY

RYE LAKE WATER FILTRATION PLANT
HARRISON, NY

FILTRATION PLANT
STRUCTURAL
DETAILS - SHEET 2

DATE:	FEB 2025
HAZEN NO.:	90388-000
CONTRACT NO.:	A1364-A
DRAWING NUMBER:	S-302

Autodesk Docs://90388-000_Rye_Lake_Filtration/90388-000-WFP-S.rvt
2/20/2025 11:00:52 AM

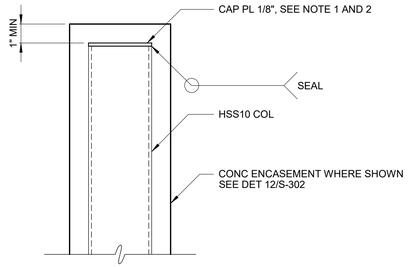

NOTES:

1. AT SLOPED BEAMS, SLOPE CAP PLATE AND CONCRETE ENCASEMENT TO MATCH BEAM SLOPE. CONNECTING BEAMS NOT SHOWN.
2. IN LOCATIONS WHERE HSS10 COLUMN IS NOT ENCASED, CAP PLATE SHALL BE GALVANIZED.
3. REINFORCEMENT NOT SHOWN FOR CLARITY.

DETAIL 14
1" = 1'-0"

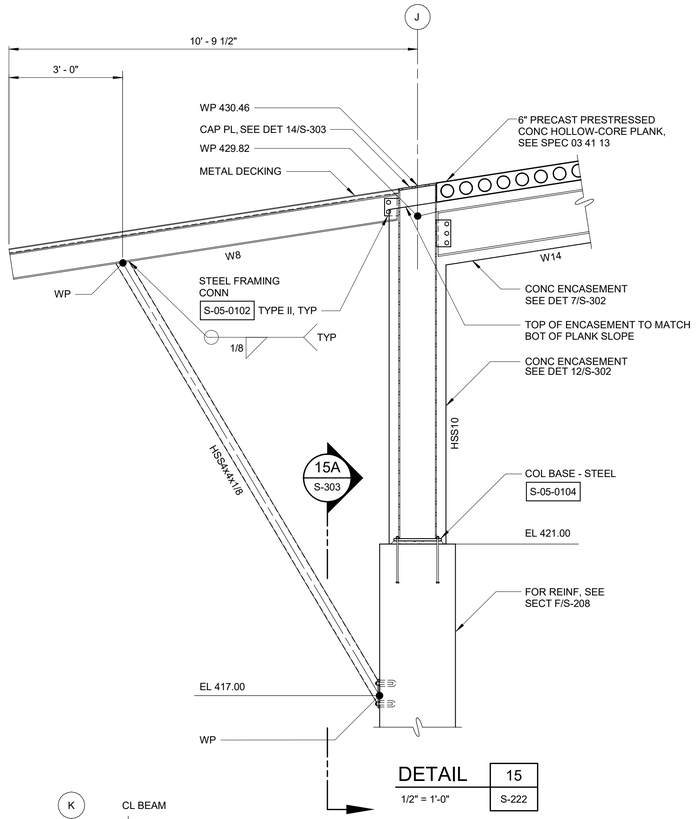

DETAIL 15
1/2" = 1'-0"

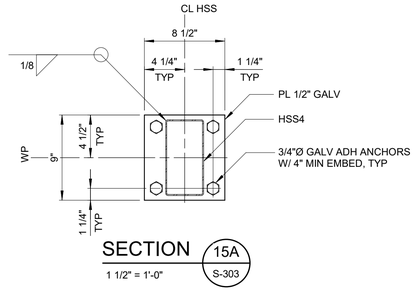

SECTION 15A / S-303
1 1/2" = 1'-0"

NOTES:

1. ALL STRUCTURAL STEEL THAT IS NOT ENCASED IN CONCRETE SHALL BE GALVANIZED.

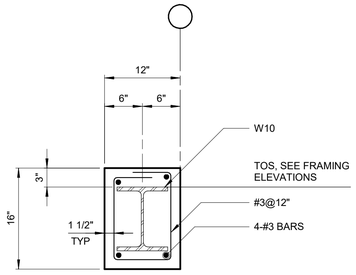

DETAIL 16
1" = 1'-0"
S-303

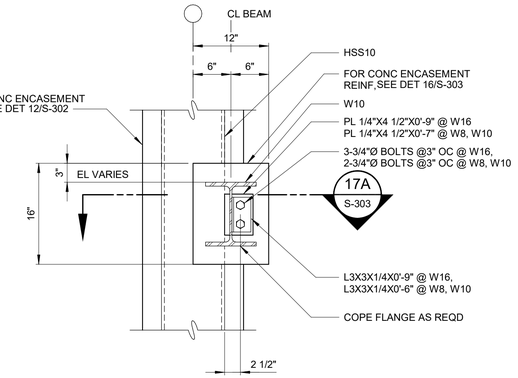

DETAIL 17
1" = 1'-0"
S-210

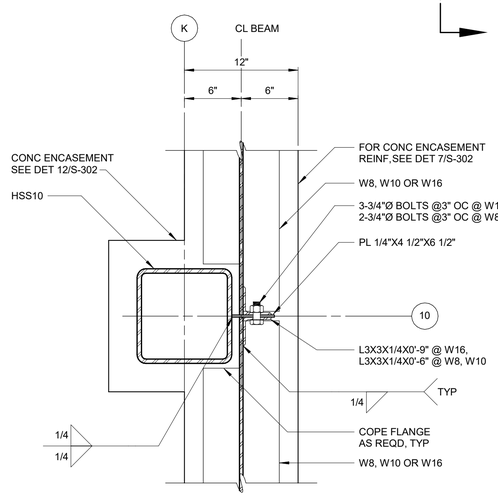

SECTION 17A / S-303
1 1/2" = 1'-0"

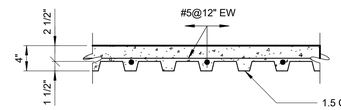

1.5 C 20 GAGE METAL DECK. FASTENER PATTERN SHALL BE 36/4, 5/8" PUDDLE WELDS W/ 2#10 SCREW SIDELAP FASTENERS PER SPAN EQUALLY SPACED. AT OPENINGS IN METAL DECK, DECK SHALL BE ATTACHED TO STRUCTURAL MEMBERS ON ALL SIDES WITH #10 SCREWS AT 9" MAX.

DETAIL 18
1" = 1'-0"
S-120

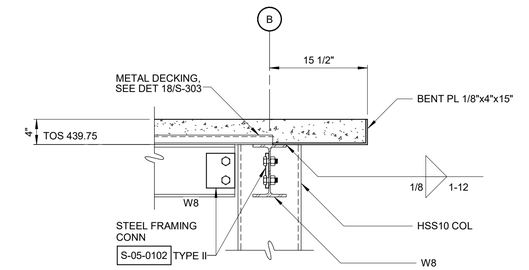

NOTE:
ALL FRAMING SHOWN ON THIS DETAIL SHALL BE GALVANIZED STEEL.

DETAIL 19
1" = 1'-0"
S-206

1/2" = 1'-0" 12" 0 1 3'
3/4" = 1'-0" 6" 0 1 2'
1" = 1'-0" 12" 6 0 1'
1 1/2" = 1'-0" 4" 0 1'

WARNING
IT IS A VIOLATION OF SECTION 7209.2 OF THE NEW YORK STATE EDUCATION LAW FOR ANY PERSON, UNLESS ACTING UNDER THE DIRECTION OF A LICENSED PROFESSIONAL ENGINEER, TO ALTER IN ANY WAY PLANS, SPECIFICATIONS, PLATS OR REPORTS TO WHICH THE SEAL OF A PROFESSIONAL ENGINEER HAS BEEN APPLIED. IF AN ITEM BEARING THE SEAL OF A PROFESSIONAL ENGINEER IS ALTERED, THE ALTERING ENGINEER SHALL AFFIX TO THE ITEM HIS SEAL AND THE NOTATION "ALTERED BY" FOLLOWED BY HIS SIGNATURE, THE DATE, AND A SPECIFIC DESCRIPTION OF THE ALTERATION.

REV	ISSUED FOR	DATE	BY

PROJECT ENGINEER:	R. FROST
DESIGNED BY:	J. EDER
DRAWN BY:	R. HERNANDEZ
CHECKED BY:	C. PHILLIPS

IF THIS BAR DOES NOT MEASURE 1" THEN DRAWING IS NOT TO FULL SCALE 0 1/2" 1"

BID SET

STATE OF NEW YORK · JC EDER · 097035 · LICENSED PROFESSIONAL ENGINEER

Hazen

HAZEN AND SAWYER
498 SEVENTH AVENUE, 11th FLOOR
NEW YORK, NEW YORK 10018

WESTCHESTER JOINT WATER WORKS
MAMARONECK, NY

RYE LAKE WATER FILTRATION PLANT
HARRISON, NY

FILTRATION PLANT
STRUCTURAL
DETAILS - SHEET 3

DATE:	FEB 2025
HAZEN NO.:	90388-000
CONTRACT NO.:	A1364-A
DRAWING NUMBER:	S-303

Autodesk Docs://90388-000_Rye_Lake_Filtration/90388-000-WFP-S.rvt
2/20/2025 11:00:53 AM

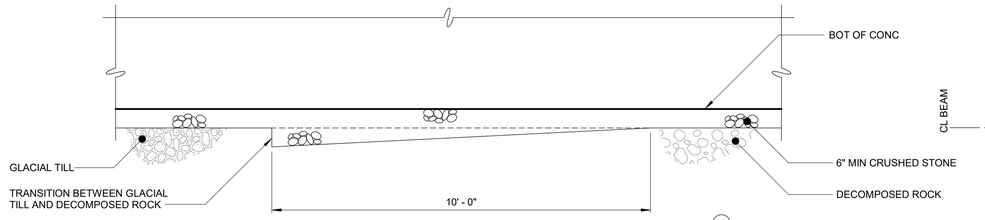

DETAIL 20
1/2" = 1'-0" S-200

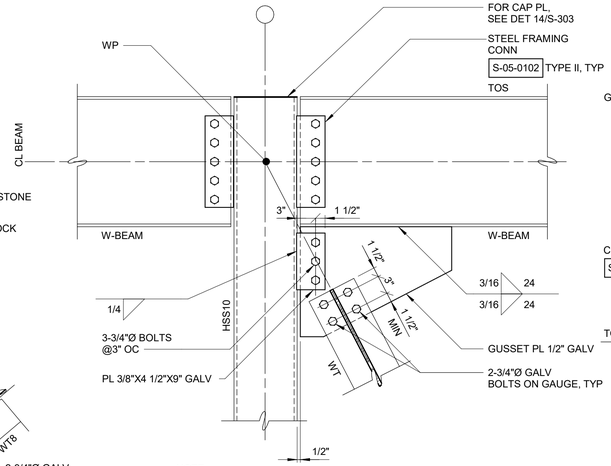

NOTE:
CONCRETE ENCASEMENT NOT SHOWN. FOR ENCASEMENT INFORMATION, SEE DETAIL 40/S-306 AND FRAMING ELEVATIONS.

DETAIL 21
1" = 1'-0" S-218

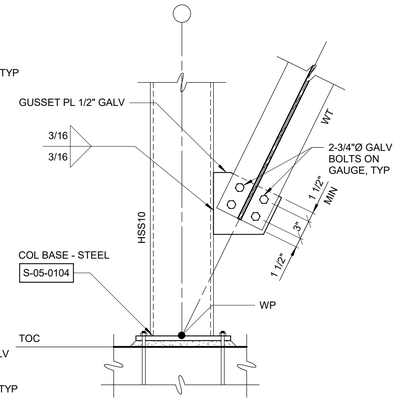

NOTE:
CONCRETE ENCASEMENT NOT SHOWN. FOR ENCASEMENT INFORMATION, SEE DETAIL 40/S-306 AND FRAMING ELEVATIONS.

DETAIL 22
1" = 1'-0" S-218

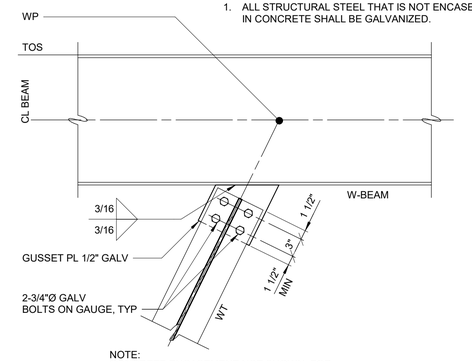

NOTE:
CONCRETE ENCASEMENT NOT SHOWN. FOR ENCASEMENT INFORMATION, SEE DETAIL 40/S-306 AND FRAMING ELEVATIONS.

DETAIL 23
1" = 1'-0" S-218

NOTES:
1. ALL STRUCTURAL STEEL THAT IS NOT ENCASED IN CONCRETE SHALL BE GALVANIZED.

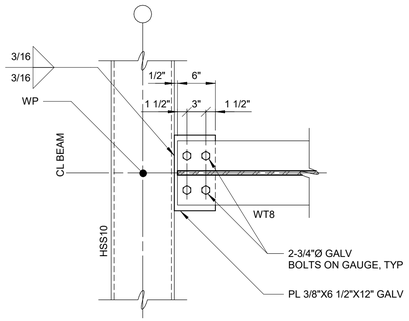

DETAIL 24
1" = 1'-0" S-218

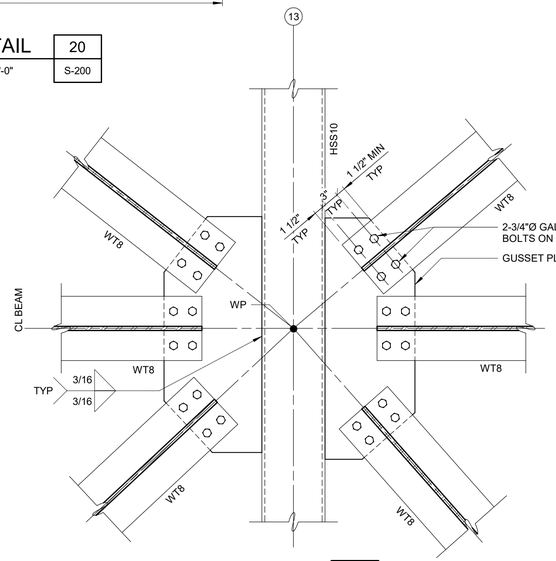

DETAIL 25
1" = 1'-0" S-218

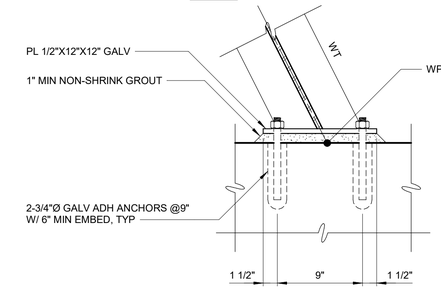

DETAIL 26
1 1/2" = 1'-0" S-218

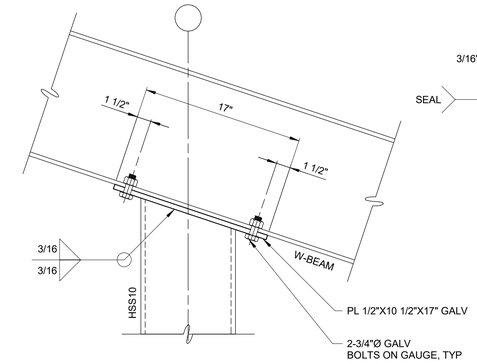

DETAIL 27
1 1/2" = 1'-0" S-218

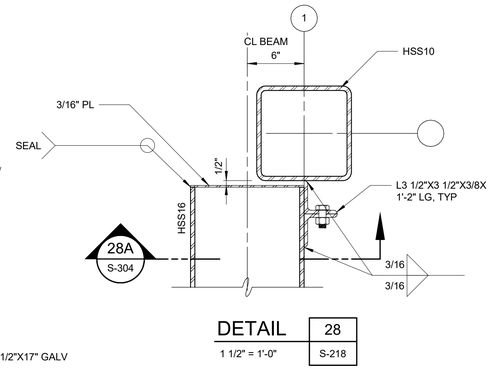

DETAIL 28
1 1/2" = 1'-0" S-218

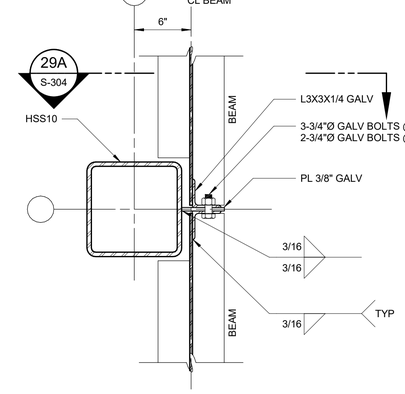

DETAIL 29
1 1/2" = 1'-0" S-218

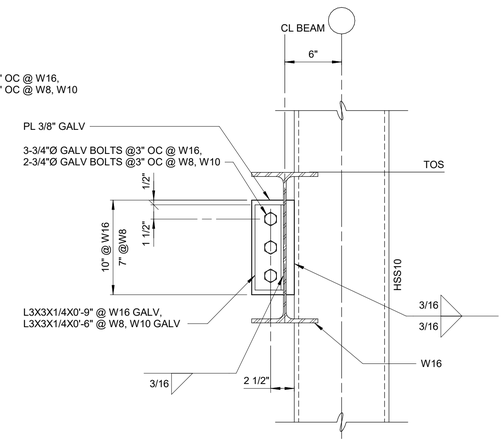

SECTION 29A
1 1/2" = 1'-0" S-304

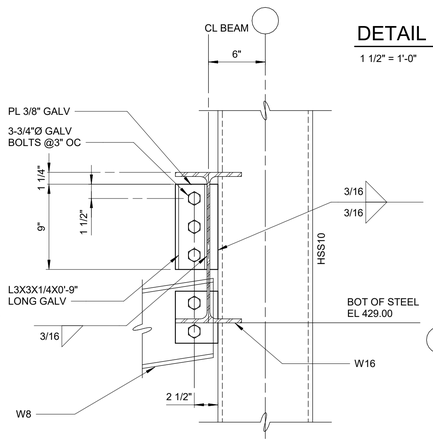

THIS DETAIL AT COL LINE K-11 ONLY

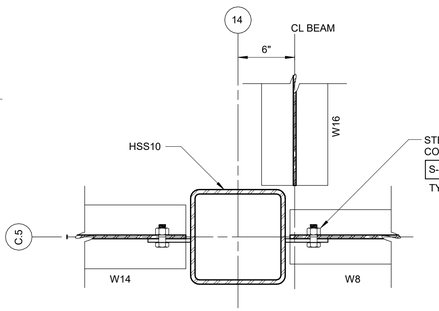

DETAIL 30
1 1/2" = 1'-0" S-219

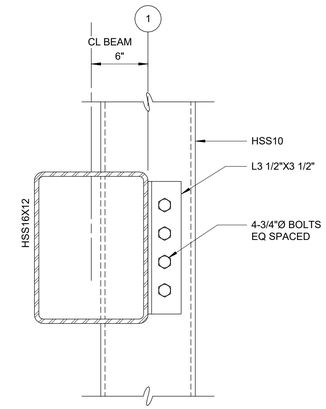

DETAIL 28A
1 1/2" = 1'-0" S-304

1" = 1'-0" 12" 6 0 1'

1 1/2" = 1'-0" 4" 0 1'

WARNING
IT IS A VIOLATION OF SECTION 7209.2 OF THE NEW YORK STATE EDUCATION LAW FOR ANY PERSON, UNLESS ACTING UNDER THE DIRECTION OF A LICENSED PROFESSIONAL ENGINEER, TO ALTER IN ANY WAY PLANS, SPECIFICATIONS, PLATS OR REPORTS TO WHICH THE SEAL OF A PROFESSIONAL ENGINEER HAS BEEN AFFIXED. IF AN ITEM BEARING THE SEAL OF A PROFESSIONAL ENGINEER IS ALTERED, THE ALTERING ENGINEER SHALL AFFIX TO THE ITEM HIS SEAL AND THE NOTATION "ALTERED BY" FOLLOWED BY HIS SIGNATURE, THE DATE, AND A SPECIFIC DESCRIPTION OF THE ALTERATION.

REV	ISSUED FOR	DATE	BY

PROJECT ENGINEER:	R. FROST
DESIGNED BY:	J. EDER
DRAWN BY:	R. HERNANDEZ
CHECKED BY:	C. PHILLIPS
IF THIS BAR DOES NOT MEASURE 1" THEN DRAWING IS NOT TO FULL SCALE	0 1/2" 1"

BID SET

STATE OF NEW YORK · JC EDER · 097035 · LICENSED PROFESSIONAL ENGINEER

Hazen

HAZEN AND SAWYER
498 SEVENTH AVENUE, 11th FLOOR
NEW YORK, NEW YORK 10018

WESTCHESTER JOINT WATER WORKS
MAMARONECK, NY

RYE LAKE WATER FILTRATION PLANT
HARRISON, NY

FILTRATION PLANT
STRUCTURAL
DETAILS - SHEET 4

DATE:	FEB 2025
HAZEN NO.:	90388-000
CONTRACT NO.:	A1364-A
DRAWING NUMBER:	S-304

Autodesk Docs://90388-000_Rye_Lake_Filtration/90388-000-WFP-S.rvt
2/20/2025 11:00:54 AM

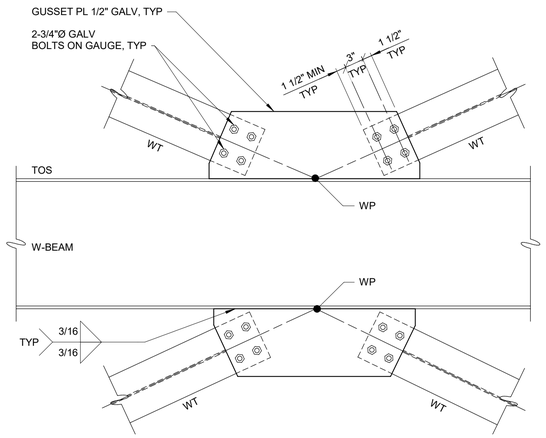

DETAIL 31
1" = 1'-0" S-219

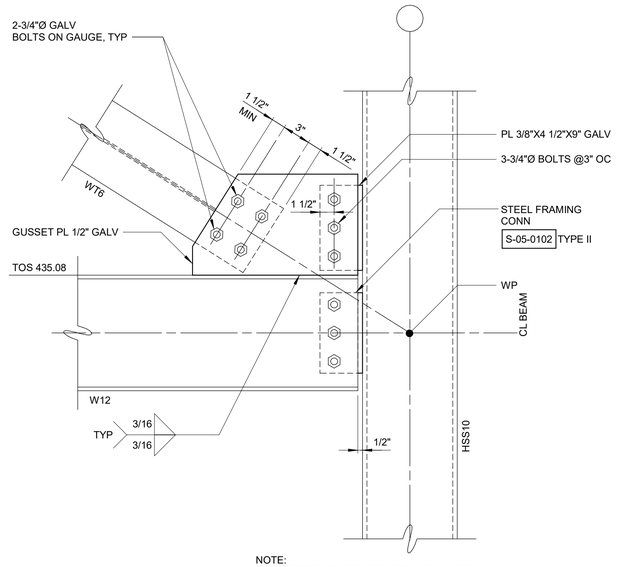

NOTE:
CONCRETE ENCASEMENT NOT SHOWN. FOR ENCASEMENT INFORMATION, SEE DETAIL 40/S-306 AND FRAMING ELEVATIONS.

DETAIL 32
1 1/2" = 1'-0" S-219

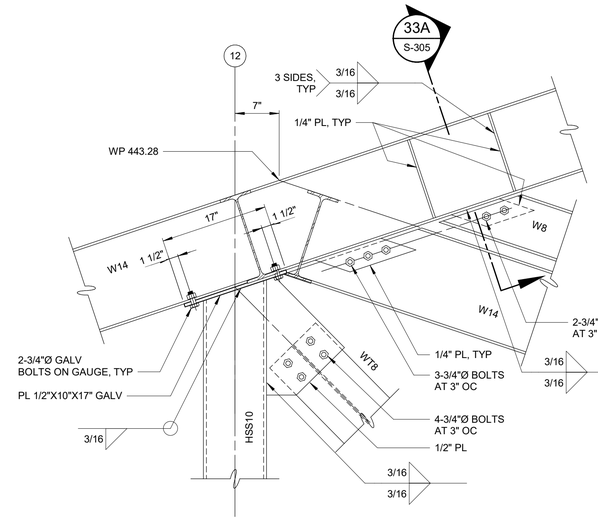

DETAIL 33
1" = 1'-0" S-219

NOTES:

1. ALL STRUCTURAL STEEL THAT IS NOT ENCASED IN CONCRETE SHALL BE GALVANIZED.

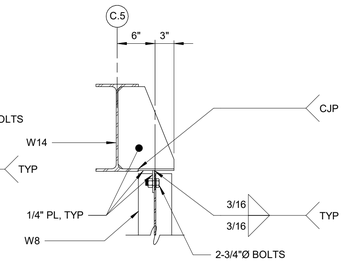

SECTION 33A S-305
1" = 1'-0"

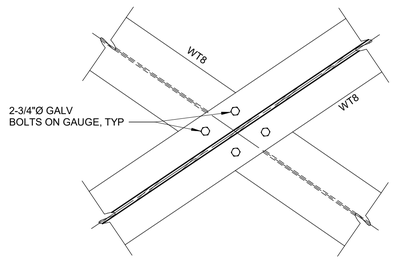

NOTE:
CONCRETE ENCASEMENT NOT SHOWN. FOR ENCASEMENT INFORMATION, SEE DETAIL 7/S-302 SIMILAR AND FRAMING ELEVATIONS.

DETAIL 34
1" = 1'-0" S-222

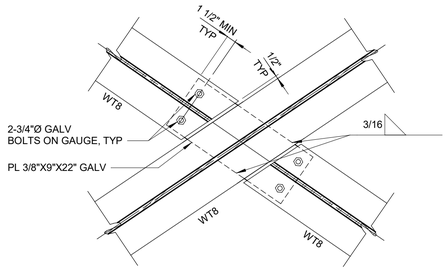

NOTE:
CONCRETE ENCASEMENT NOT SHOWN. FOR ENCASEMENT INFORMATION, SEE DETAIL 7/S-302 SIMILAR AND FRAMING ELEVATIONS.

DETAIL 35
1" = 1'-0" S-223

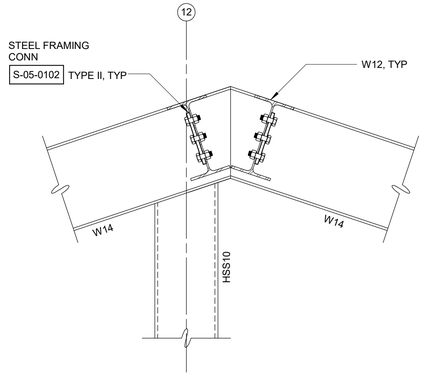

DETAIL 36
1" = 1'-0" S-220

1" = 1'-0" 12" 6 0 1'
1 1/2" = 1'-0" 4" 0 1'

WARNING
IT IS A VIOLATION OF SECTION 7209.2 OF THE NEW YORK STATE EDUCATION LAW FOR ANY PERSON, UNLESS ACTING UNDER THE DIRECTION OF A LICENSED PROFESSIONAL ENGINEER, TO ALTER IN ANY WAY PLANS, SPECIFICATIONS, PLATS OR REPORTS TO WHICH THE SEAL OF A PROFESSIONAL ENGINEER HAS BEEN AFFIXED. IF AN ITEM BEARING THE SEAL OF A PROFESSIONAL ENGINEER IS ALTERED, THE ALTERING ENGINEER SHALL AFFIX TO THE ITEM HIS SEAL AND THE NOTATION "ALTERED BY" FOLLOWED BY HIS SIGNATURE, THE DATE, AND A SPECIFIC DESCRIPTION OF THE ALTERATION.

REV	ISSUED FOR	DATE	BY

PROJECT ENGINEER:	R. FROST
DESIGNED BY:	J. EDER
DRAWN BY:	R. HERNANDEZ
CHECKED BY:	C. PHILLIPS
IF THIS BAR DOES NOT MEASURE 1" THEN DRAWING IS NOT TO FULL SCALE	0 1/2" 1"

BID SET

STATE OF NEW YORK · JC EDER · 097035 · LICENSED PROFESSIONAL ENGINEER

Hazen
HAZEN AND SAWYER
498 SEVENTH AVENUE, 11th FLOOR
NEW YORK, NEW YORK 10018

WESTCHESTER JOINT WATER WORKS
MAMARONECK, NY

RYE LAKE WATER FILTRATION PLANT
HARRISON, NY

FILTRATION PLANT
STRUCTURAL
DETAILS - SHEET 5

DATE:	FEB 2025
HAZEN NO.:	90388-000
CONTRACT NO.:	A1364-A
DRAWING NUMBER:	S-305

Autodesk Docs://90388-000_Rye_Lake_Filtration/90388-000-WFP-S.rvt
2/20/2025 11:00:55 AM

NOTES:

1. ALL STRUCTURAL STEEL THAT IS NOT ENCASED IN CONCRETE SHALL BE GALVANIZED.

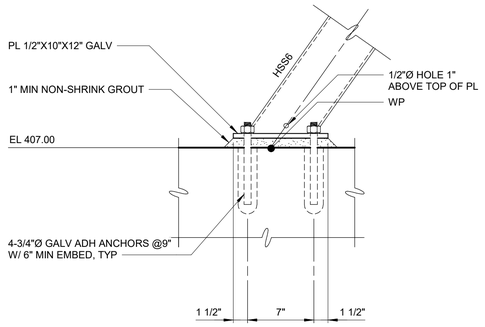

DETAIL 37
1 1/2" = 1'-0" S-222

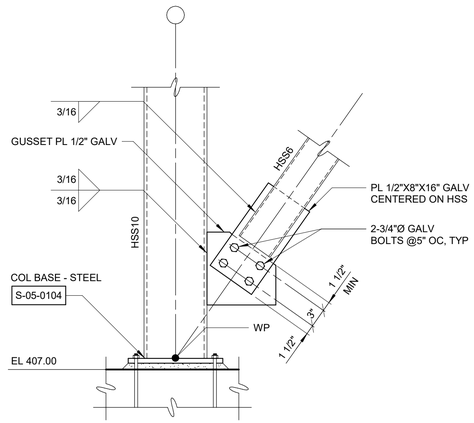

DETAIL 38
1" = 1'-0" S-222

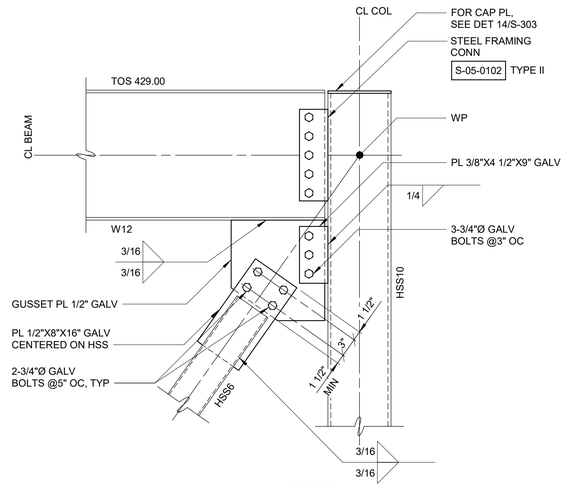

DETAIL 39
1" = 1'-0" S-222

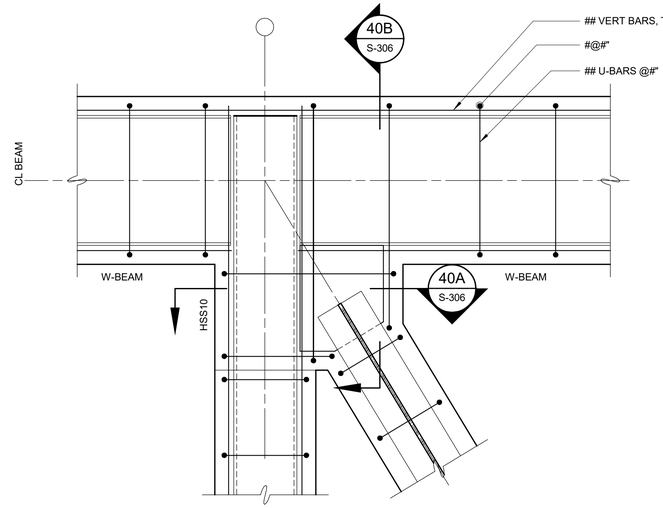

DETAIL 40
1" = 1'-0" S-304

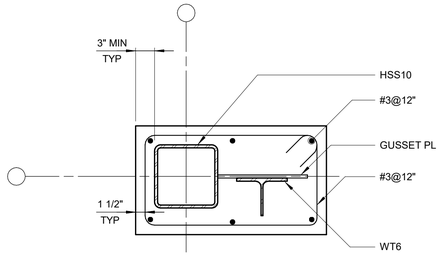

SECTION 40A
1" = 1'-0" S-306

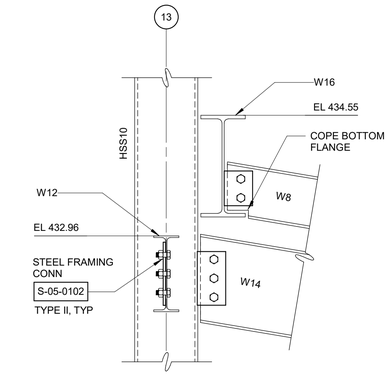

DETAIL 41
1" = 1'-0" S-219

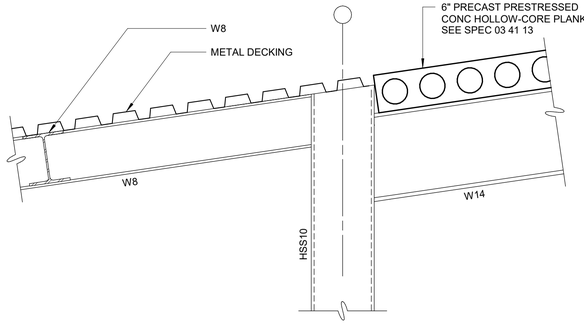

DETAIL 42
1" = 1'-0"

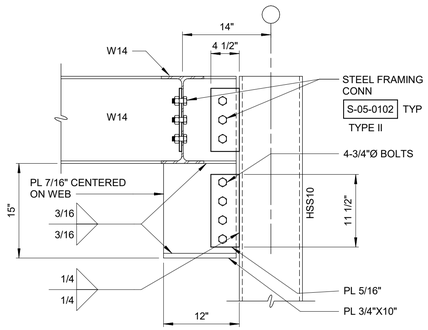

DETAIL 44
1" = 1'-0" S-219

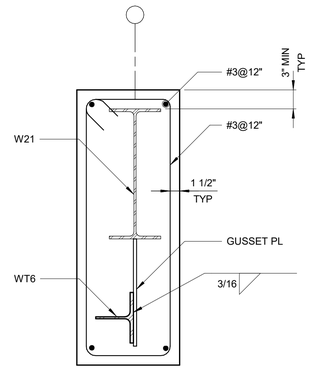

SECTION 40B
1" = 1'-0" S-306

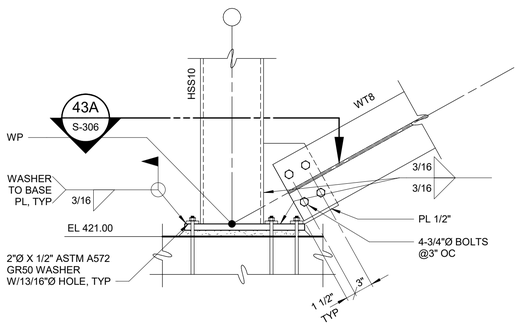

DETAIL 43
1" = 1'-0" S-219

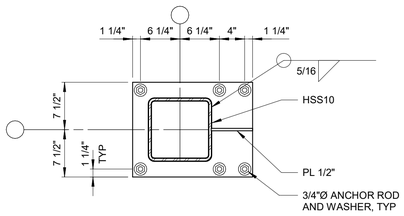

SECTION 43A
1" = 1'-0" S-306

1/2" = 1'-0" 12" 0 1 3'

1" = 1'-0" 12" 6 0 1'

WARNING
IT IS A VIOLATION OF SECTION 7209.2 OF THE NEW YORK STATE EDUCATION LAW FOR ANY PERSON, UNLESS ACTING UNDER THE DIRECTION OF A LICENSED PROFESSIONAL ENGINEER, TO ALTER IN ANY WAY PLANS, SPECIFICATIONS, PLATS OR REPORTS TO WHICH THE SEAL OF A PROFESSIONAL ENGINEER HAS BEEN APPLIED. IF AN ITEM BEARING THE SEAL OF A PROFESSIONAL ENGINEER IS ALTERED, THE ALTERING ENGINEER SHALL AFFIX TO THE ITEM HIS SEAL AND THE NOTATION "ALTERED BY" FOLLOWED BY HIS SIGNATURE, THE DATE, AND A SPECIFIC DESCRIPTION OF THE ALTERATION.

REV	ISSUED FOR	DATE	BY

PROJECT ENGINEER:	R. FROST
DESIGNED BY:	J. EDER
DRAWN BY:	R. HERNANDEZ
CHECKED BY:	C. PHILLIPS

IF THIS BAR DOES NOT MEASURE 1" THEN DRAWING IS NOT TO FULL SCALE 0 1/2" 1"

BID SET

STATE OF NEW YORK · JC EDER · 097035 · LICENSED PROFESSIONAL ENGINEER

Hazen

HAZEN AND SAWYER
498 SEVENTH AVENUE, 11th FLOOR
NEW YORK, NEW YORK 10018

WESTCHESTER JOINT WATER WORKS
MAMARONECK, NY

RYE LAKE WATER FILTRATION PLANT
HARRISON, NY

FILTRATION PLANT
STRUCTURAL
DETAILS - SHEET 6

DATE:	FEB 2025
HAZEN NO.:	90388-000
CONTRACT NO.:	A1364-A
DRAWING NUMBER:	S-306

Autodesk Docs://90388-000_Rye_Lake_Filtration/90388-000-WFP-S.rvt
2/20/2025 11:00:57 AM

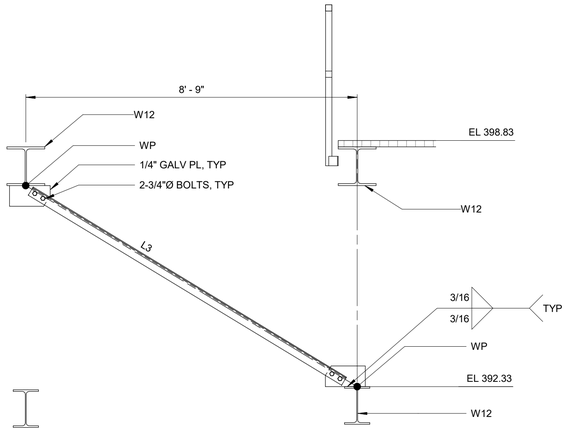

DETAIL 45
1/2" = 1'-0" S-107

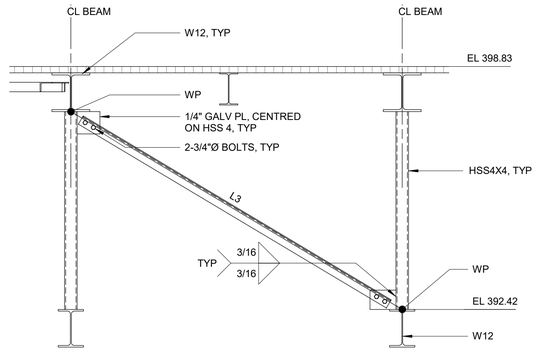

DETAIL 46
1/2" = 1'-0" S-202

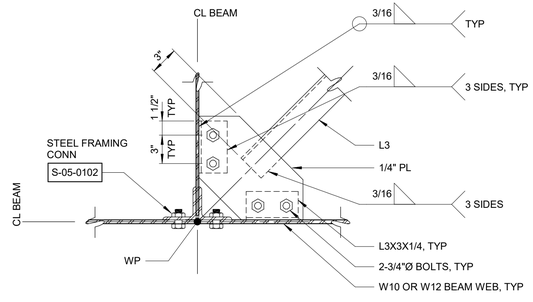

DETAIL 47
1 1/2" = 1'-0" S-106

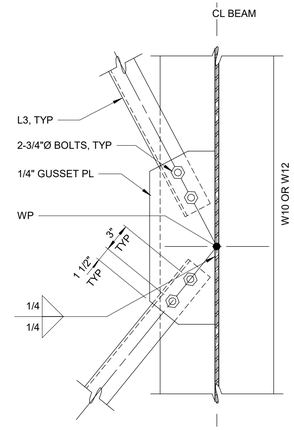

DETAIL 48
1 1/2" = 1'-0" S-106

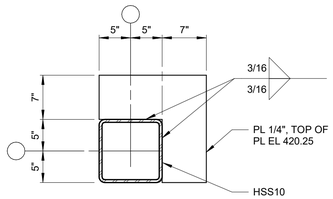

DETAIL 49
1" = 1'-0" S-114

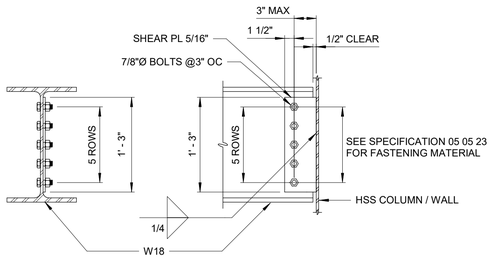

DETAIL 50
1" = 1'-0"

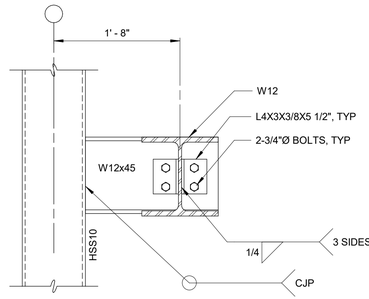

DETAIL 51
1" = 1'-0" S-222

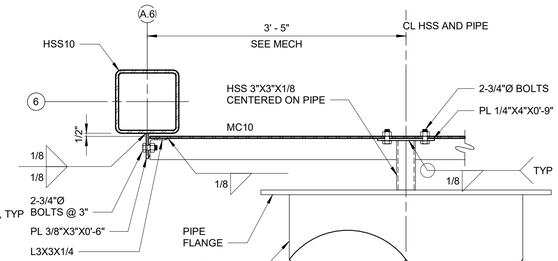

DETAIL 52
1" = 1'-0" S-222

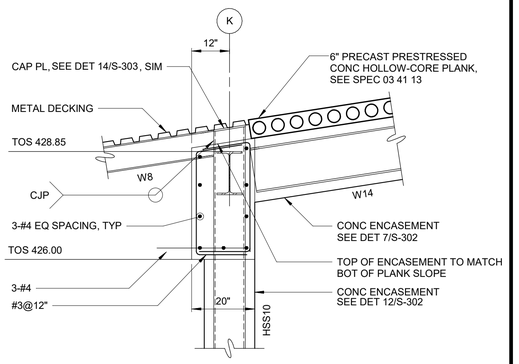

DETAIL 53
1/2" = 1'-0" S-212

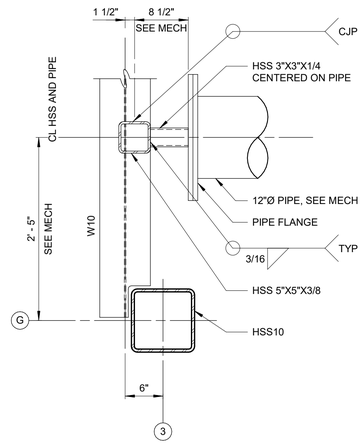

DETAIL 54
1" = 1'-0" S-221

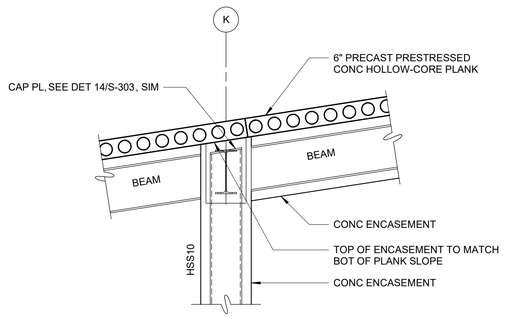

DETAIL 55
1/2" = 1'-0" S-222

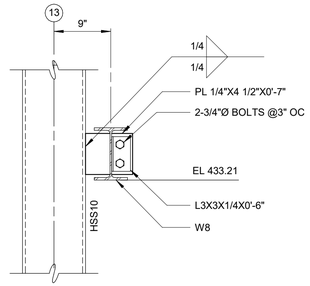

DETAIL 56
1" = 1'-0" S-220

WARNING
IT IS A VIOLATION OF SECTION 7209.2 OF THE NEW YORK STATE EDUCATION LAW FOR ANY PERSON, UNLESS ACTING UNDER THE DIRECTION OF A LICENSED PROFESSIONAL ENGINEER, TO ALTER IN ANY WAY PLANS, SPECIFICATIONS, PLATS OR REPORTS TO WHICH THE SEAL OF A PROFESSIONAL ENGINEER HAS BEEN APPLIED. IF AN ITEM BEARING THE SEAL OF A PROFESSIONAL ENGINEER IS ALTERED, THE ALTERING ENGINEER SHALL AFFIX TO THE ITEM HIS SEAL AND THE NOTATION "ALTERED BY" FOLLOWED BY HIS SIGNATURE, THE DATE, AND A SPECIFIC DESCRIPTION OF THE ALTERATION.

REV	ISSUED FOR	DATE	BY

PROJECT ENGINEER:	R. FROST
DESIGNED BY:	J. EDER
DRAWN BY:	R. HERNANDEZ
CHECKED BY:	C. PHILLIPS

IF THIS BAR DOES NOT MEASURE 1" THEN DRAWING IS NOT TO FULL SCALE — 0 1/2" 1"

BID SET

STATE OF NEW YORK · JC EDER · 097035 · LICENSED PROFESSIONAL ENGINEER

Hazen
HAZEN AND SAWYER
498 SEVENTH AVENUE, 11th FLOOR
NEW YORK, NEW YORK 10018

WESTCHESTER JOINT WATER WORKS
MAMARONECK, NY

RYE LAKE WATER FILTRATION PLANT
HARRISON, NY

FILTRATION PLANT
STRUCTURAL
DETAILS - SHEET 7

DATE:	FEB 2025
HAZEN NO.:	90388-000
CONTRACT NO.:	A1364-A
DRAWING NUMBER:	S-307

Autodesk Docs://90388-000_Rye_Lake_Filtration/90388-000-WFP-S.rvt
2/20/2025 11:00:59 AM

NOTES:

1. FOR STRUCTURE LOCATIONS SEE CIVIL DRAWINGS.
2. FOR GATE DETAILS SEE DRAWING A-501 SITE ENTRANCE PLAN AND DETIALS.

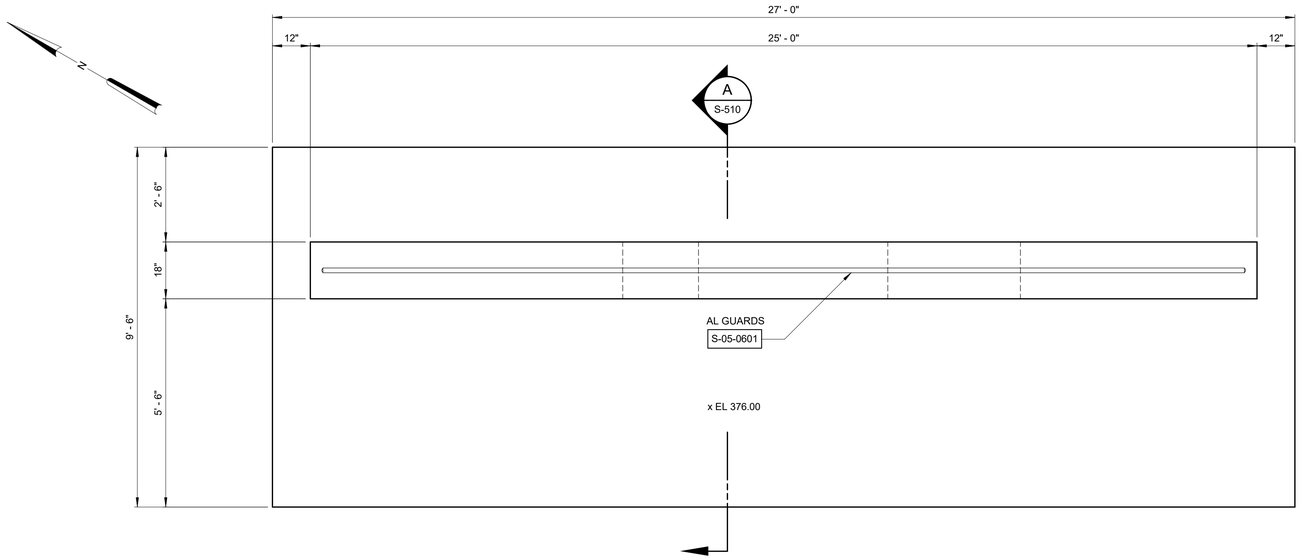

HEADWALL PLAN
1/2" = 1'-0"

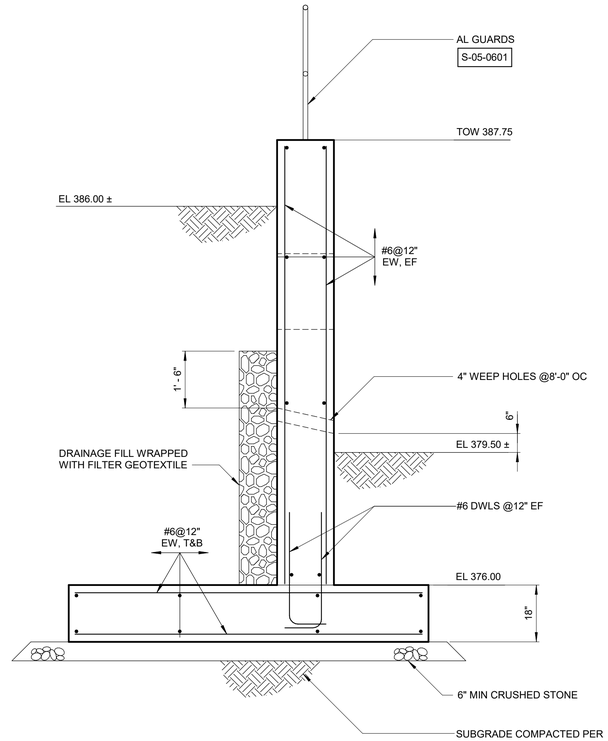

SECTION A S-510
1/2" = 1'-0"

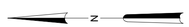

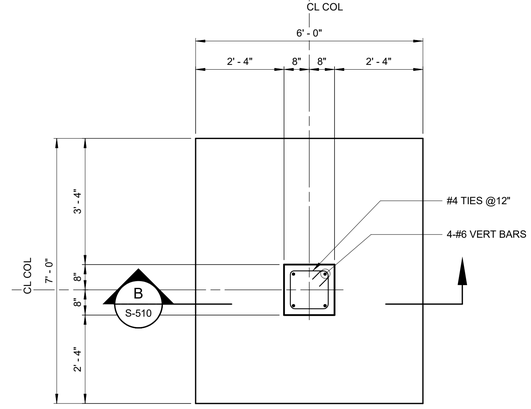

NOTE:
PROVIDE TWO FOUNDATIONS AND POSTS.

GATE POST AND FOUNDATION PLAN
1/2" = 1'-0"

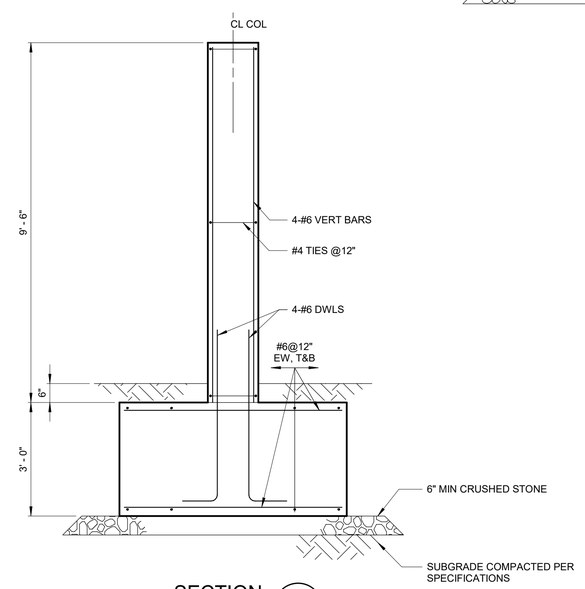

SECTION B S-510
1/2" = 1'-0"

1/2" = 1'-0" 12" 0 1 3'

WARNING
IT IS A VIOLATION OF SECTION 7209.2 OF THE NEW YORK STATE EDUCATION LAW FOR ANY PERSON, UNLESS ACTING UNDER THE DIRECTION OF A LICENSED PROFESSIONAL ENGINEER, TO ALTER IN ANY WAY PLANS, SPECIFICATIONS, PLATS OR REPORTS TO WHICH THE SEAL OF A PROFESSIONAL ENGINEER HAS BEEN APPLIED. IF AN ITEM BEARING THE SEAL OF A PROFESSIONAL ENGINEER IS ALTERED, THE ALTERING ENGINEER SHALL AFFIX TO THE ITEM HIS SEAL AND THE NOTATION "ALTERED BY" FOLLOWED BY HIS SIGNATURE, THE DATE, AND A SPECIFIC DESCRIPTION OF THE ALTERATION.

REV	ISSUED FOR	DATE	BY

PROJECT ENGINEER:	R. FROST
DESIGNED BY:	J. EDER
DRAWN BY:	J. MEDLEY
CHECKED BY:	C. PHILLIPS
IF THIS BAR DOES NOT MEASURE 1" THEN DRAWING IS NOT TO FULL SCALE	0 1/2" 1"

BID SET

STATE OF NEW YORK JC EDER 097035 LICENSED PROFESSIONAL ENGINEER

Hazen

HAZEN AND SAWYER
498 SEVENTH AVENUE, 11th FLOOR
NEW YORK, NEW YORK 10018

WESTCHESTER JOINT WATER WORKS
MAMARONECK, NY

RYE LAKE WATER FILTRATION PLANT
HARRISON, NY

SITE STRUCTURES
STRUCTURAL
PLANS AND SECTIONS

DATE:	FEB 2025
HAZEN NO.:	90388-000
CONTRACT NO.:	A1364-A
DRAWING NUMBER:	S-510

Autodesk Docs://90388-000_Rye_Lake_Filtration/90388-000-HW-S.rvt
2/6/2025 7:26:28 AM

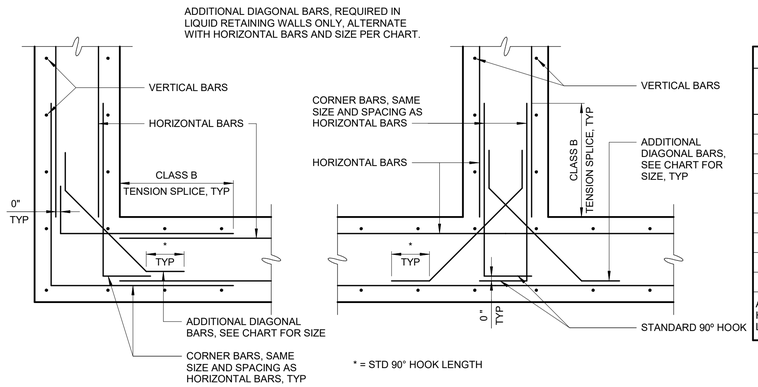

CORNER

INTERSECTION

DIAGONAL BAR SIZE CHART	
BAR SIZE - HORIZONTAL REINFORCEMENT	BAR SIZE - DIAGONAL REINFORCEMENT
# 3	# 3
# 4	# 3
# 5	# 4
# 6	# 5
# 7	# 5
# 8	# 6
# 9	# 7
# 10	# 8
# 11	# 9

AT LOCATIONS WHERE DIFFERENT SIZE HORIZONTAL BARS CONVERGE, THE LARGER BAR SIZE SHALL CONTROL

WALL REINFORCING

S-03-0108

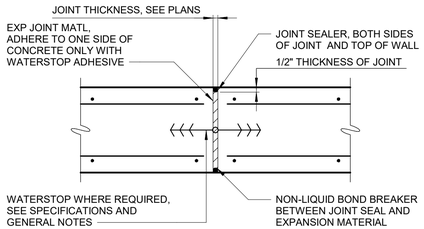

EXPANSION JOINT

S-03-0201

NOTES:

1. VERTICAL JOINTS SHALL BE FORMED BY AN APPROVED JOINT INSERT. HORIZONTAL JOINTS SHALL BE FORMED BY AN APPROVED JOINT INSERT OR SAWCUTTING PERFORMED PER SPECIFICATION.
2. DEPTH SHALL BE 1 1/2" IN REINF CONC DEPTH SHALL BE 1/3 OF CONCRETE THICKNESS IN UNREINFORCED CONCRETE PAVEMENT.

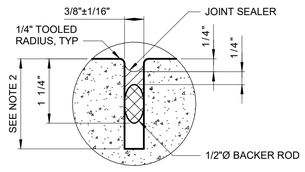

SEALED JOINT

S-03-0202

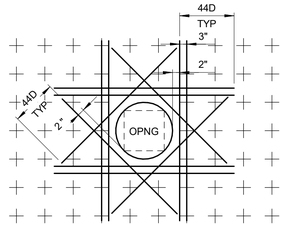

NOTES:

1. THIS DETAIL APPLIES FOR OPENINGS 8"Ø AND LARGER. FOR SMALLER OPENINGS, BEND BARS OR ADJUST SPACING OF REINFORCEMENT TO AVOID OPENING.
2. PLACE EXTRA BARS OF THE SAME SIZE AS THE INTERRUPTED BARS AT EACH SIDE OF OPENING. QUANTITY OF EXTRA BARS AT EACH SIDE SHALL EQUAL HALF THE QUANTITY OF INTERRUPTED BARS EXCEPT WHERE NOTED OTHERWISE.
3. PROVIDE ONE DIAGONAL BAR EACH SIDE OF OPENING WITH SIZE EQUAL TO MAIN REINFORCEMENT, TYPICAL EACH FACE.
4. WHERE INVERT OF OPENING IN WALL IS LESS THAN 44 BAR DIAMETERS FROM TOP OF SLAB, EXTRA REINFORCEMENT ON EACH SIDE SHALL INCLUDE DOWELS EMBEDDED INTO SLAB WITH STANDARD 90 DEGREE HOOKS TO SPLICE WITH EXTRA VERTICAL REINFORCEMENT. DOWELS SHALL ALSO STILL BE PROVIDED BELOW OPENING.
5. WHERE INVERT OF OPENING IN WALL OR SLAB IS CLOSER THAN 44 BAR DIAMETERS TO EDGE OF SLAB OR BOTTOM OF WALL, EXTRA DIAGONAL BARS MAY BE TERMINATED TWO INCHES FROM EDGE OF SLAB OR BOTTOM OF WALL. DOWELS DO NOT HAVE TO BE PROVIDED TO SPLICE WITH DIAGONAL BARS.

REINFORCING AT OPENINGS

S-03-0109

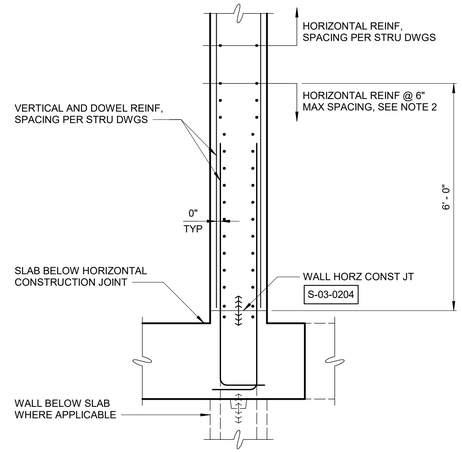

NOTES:

1. THIS DETAIL APPLIES TO WALLS OF ALL LIQUID RETAINING AND BELOW-GRADE STRUCTURES UNLESS SPECIFICALLY NOTED OTHERWISE ON PLANS.
2. HORIZONTAL REINFORCEMENT IN THE 6'-0" ZONE ABOVE HORIZONTAL CONSTRUCTION JOINTS SHALL MATCH THE BAR SIZE INDICATED FOR HORIZONTAL REINFORCEMENT ON THE STRUCTURAL DRAWINGS UNLESS NOTED OTHERWISE.
3. THE ADDITIONAL DIAGONAL REINFORCEMENT DEPICTED IN DETAIL S-03-0108 IS NOT REQUIRED IN THE BOTTOM 6'-0" OF WALL ABOVE AN INTERSECTING SLAB.

WALL CONSTRUCTION JOINT HORIZONTAL REINFORCING

S-03-0115

DEVELOPMENT LENGTH OF STANDARD HOOKS

FOR UNCOATED BARS IN TENSION

fy = 60,000 psi fc' = 4000 psi OR GREATER

BAR SIZE	DEVELOPMENT LENGTH, ℓdh	
	BASIC	W/ CONC COVER *
#3	8"	6"
#4	10"	7"
#5	1'-0"	9"
#6	1'-3"	11"
#7	1'-5"	1'-0"
#8	1'-7"	1'-2"
#9	1'-10"	1'-4"
#10	2'-1"	1'-6"
#11	2'-3"	1'-7"

* SIDE COVER NORMAL TO PLANE OF HOOK AT LEAST 2 1/2", AND FOR 90° HOOK, END COVER BEYOND OUTSIDE END OF HOOK AT LEAST 2".

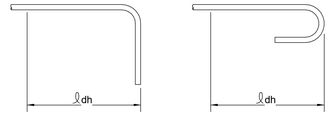

BASIC DEVELOPMENT LENGTH AND SPLICE LENGTH

FOR UNCOATED BARS IN TENSION

** BASED ON MATERIALS AND CONDITIONS AS FOLLOWS:

fy = 60,000 psi fc' = 4000 psi OR GREATER

CLEAR COVER≥ 1.5 INCHES NORMAL WEIGHT CONCRETE

BASIC DEVELOPMENT LENGTH ℓd				BAR SIZE	CLASS B SPLICE LENGTH 1.3 x ℓd			
CLEAR SPACING≥ 3"		CLEAR SPACING <3"			CLEAR SPACING≥ 3"		CLEAR SPACING <3"	
BASIC	TOP *	BASIC	TOP *		BASIC	TOP *	BASIC	TOP *
1'-0"	1'-0"	1'-0"	1'-4"	# 3	1'-0"	1'-3"	1'-4"	1'-8"
1'-0"	1'-3"	1'-7"	2'-1"	# 4	1'-3"	1'-8"	2'-1"	2'-9"
1'-3"	1'-7"	2'-4"	3'-0"	# 5	1'-7"	2'-0"	3'-0"	3'-11"
1'-6"	1'-11"	3'-1"	4'-0"	# 6	1'-11"	2'-5"	4'-0"	5'-2"
2'-5"	3'-1"	4'-11"	6'-4"	# 7	3'-1"	4'-0"	6'-4"	8'-3"
3'-0"	3'-11"	6'-0"	7'-9"	# 8	3'-11"	5'-1"	7'-9"	10'-1"
3'-8"	4'-9"	6'-9"	8'-9"	# 9	4'-9"	6'-3"	8'-9"	11'-4"
4'-6"	5'-10"	7'-7"	9'-10"	# 10	5'-10"	7'-7"	9'-10"	12'-9"
5'-5"	7'-0"	8'-5"	10'-11"	# 11	7'-0"	9'-1"	10'-11"	14'-2"

* TOP REINFORCEMENT IS ANY HORIZONTAL REINFORCEMENT SO PLACED THAT MORE THAN 12 INCHES OF FRESH CONCRETE IS CAST IN THE MEMBER BELOW THE REINFORCEMENT.

** FOR MATERIALS OR CONDITIONS DIFFERENT FROM THOSE STATED, LENGTHS SHOWN IN CHART SHALL BE MODIFIED TO CONFORM TO THE PROVISIONS OF ACI 318-14, SECTION 25.3.

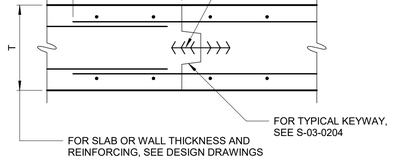

CONSTRUCTION JOINT

S-03-0203

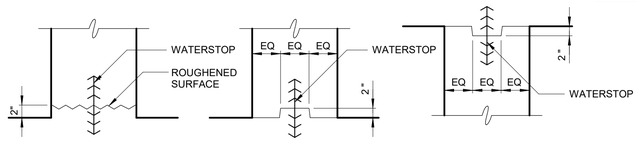

TYPE I - STARTER WALL TYPE II - KEYWAY TYPE III - INVERTED KEYWAY

NOTES:
1. TYPE I - STARTER WALL IS REQUIRED FOR ALL BASE OF WALLS 12 INCHES OR LESS IN THICKNESS WHERE WATERSTOPS ARE REQUIRED.
2. TYPE I - STARTER WALL IS PREFERRED, BUT TYPE II - KEYWAY IS ACCEPTABLE FOR BASE OF WALLS GREATER THAN 12 INCHES IN THICKNESS WHERE WATERSTOPS ARE REQUIRED.
3. TYPE III - INVERTED KEYWAY IS REQUIRED AT TOP OF WALLS WHERE WATERSTOPS ARE REQUIRED.

WALL HORIZONTAL CONSTRUCTION JOINTS

S-03-0204

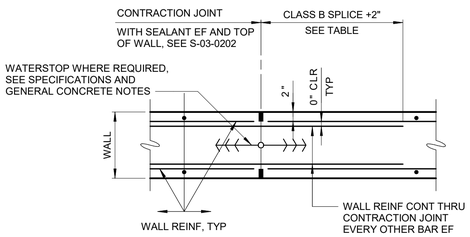

WALL CONTRACTION JOINT

S-03-0207

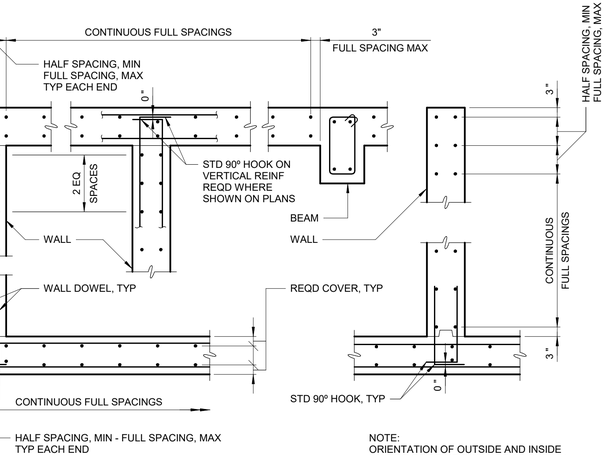

SECTION - WALLS AND SLABS

NOTE:
ORIENTATION OF OUTSIDE AND INSIDE LAYERS OF REINF SHALL BE AS SHOWN ON PLANS. "FULL SPACING" IS BAR SPACING CALLED OUT ON PLANS.

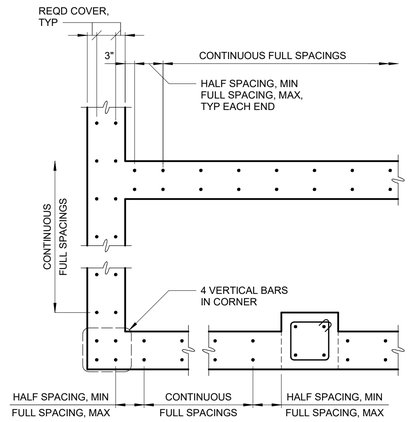

PLAN - WALLS

BAR PLACEMENT

S-03-0110

WARNING
IT IS A VIOLATION OF SECTION 7209.2 OF THE NEW YORK STATE EDUCATION LAW FOR ANY PERSON, UNLESS ACTING UNDER THE DIRECTION OF A LICENSED PROFESSIONAL ENGINEER, TO ALTER IN ANY WAY PLANS, SPECIFICATIONS, PLATS OR REPORTS TO WHICH THE SEAL OF A PROFESSIONAL ENGINEER HAS BEEN APPLIED. IF AN ITEM BEARING THE SEAL OF A PROFESSIONAL ENGINEER IS ALTERED, THE ALTERING ENGINEER SHALL AFFIX TO THE ITEM HIS SEAL AND THE NOTATION "ALTERED BY" FOLLOWED BY HIS SIGNATURE, THE DATE, AND A SPECIFIC DESCRIPTION OF THE ALTERATION.

REV	ISSUED FOR	DATE	BY

PROJECT ENGINEER:	R. FROST
DESIGNED BY:	J. EDER
DRAWN BY:	R. HERNANDEZ
CHECKED BY:	C. PHILLIPS

IF THIS BAR DOES NOT MEASURE 1" THEN DRAWING IS NOT TO FULL SCALE 0 1/2" 1"

BID SET

STATE OF NEW YORK · JC EDER · 097035 · LICENSED PROFESSIONAL ENGINEER

Hazen
HAZEN AND SAWYER
498 SEVENTH AVENUE, 11th FLOOR
NEW YORK, NEW YORK 10018

WESTCHESTER JOINT WATER WORKS
MAMARONECK, NY

RYE LAKE WATER FILTRATION PLANT
HARRISON, NY

STRUCTURAL STANDARD DETAILS
SHEET 1

DATE:	FEB 2025
HAZEN NO.:	90388-000
CONTRACT NO.:	A1364-A
DRAWING NUMBER:	S-600

Autodesk Docs://90388-000_Rye_Lake_Filtration/90388-000-General-Stru.rvt
2/20/2025 9:46:00 AM

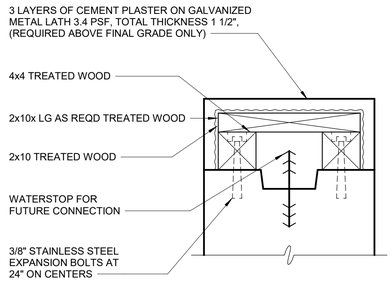

CONSTRUCTION JOINT

WATERSTOP PROTECTION AT CONNECTION WITH FUTURE CONSTRUCTION AT CONC ABOVE GRADE

S-03-0301

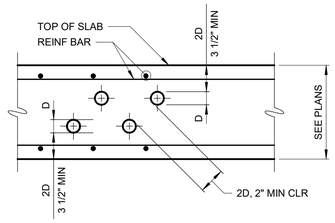

NOTE:
D DENOTES PIPE OR CONDUIT OD.

PIPE OR CONDUIT EMBEDDED IN SLAB

S-03-0403

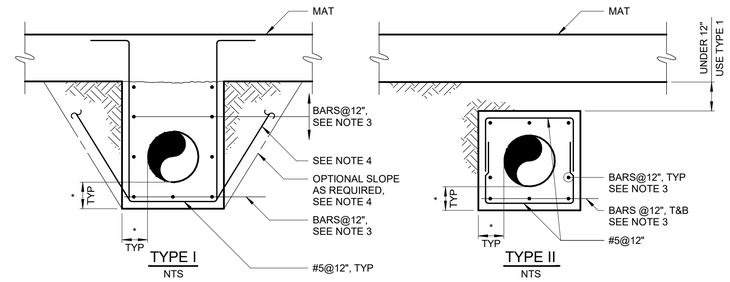

NOTES:
1. TIE IN ALL PIPES & CONDUITS BELOW GROUND FLOOR SLAB WHEN PILE FOUNDATION IS UTILIZED. USE TYPE I.
2. * DENOTES 9" FOR PIPES LESS THAN 42", 12" FOR PIPES 42" TO 72" AND 18" FOR PIPES GREATER THAN 84".
3. FOR 9" ENCASEMENTS USE #5 BARS, FOR 12" ENCASEMENTS USE #6 BARS AND FOR 18" ENCASEMENTS USE #7 BARS.
4. OPTIONAL SLOPE, WHERE UTILIZED, SHALL BE 45 DEGREES. ENCASEMENT CONCRETE SHALL BE PLACED TO THE SLOPE LINE WITH VERTICAL REBAR BENT ALONG THE SLOPE AS INDICATED.

ALL PIPING AND CONDUITS BELOW SLABS ON EARTH TO BE ENCASED BY GENERAL CONTRACTOR UNLESS NOTED OTHERWISE.

PIPE ENCASEMENTS

S-03-0404

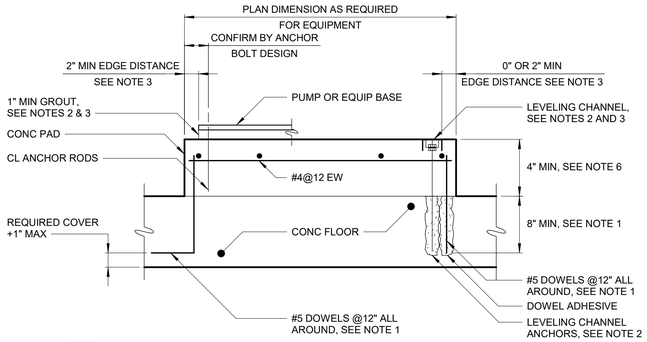

NOTES:
1. DOWELS MAY BE CAST IN WITH 90° HOOK OR ANCHORED WITH DOWEL ADHESIVE AT CONTRACTORS OPTION. WHERE FLOOR IS 8" THICK OR LESS, USE #4 DOWELS EMBEDDED TO WITHIN 2" OF BOTTOM OF FLOOR SLAB.
2. THE CONTRACTOR SHALL PROVIDE LEVELING CHANNELS AND LEVELING CHANNEL ANCHORS FOR SWITCHGEAR, SWITCHBOARDS, MOTOR CONTROL CENTERS, AND SIMILAR EQUIPMENT WHEN REQUIRED TO MEET EQUIPMENT MANUFACTURER'S LEVELING TOLERANCES. THE CONTRACTOR SHALL PROVIDE 1" MINIMUM NON-SHRINK GROUT FOR PUMPS AND SIMILAR EQUIPMENT WHEN REQUIRED TO MEET EQUIPMENT MANUFACTURER'S UNIFORM BEARING AND LEVELING REQUIREMENTS.
3. PRIOR TO PLACING CONCRETE PAD, LEVELING CHANNEL SIZE AND MEANS OF INSTALLATION, ANCHORAGE, GROUT, CONCRETE EDGE DISTANCE, AND CONCRETE BLOCKOUTS REQUIREMENTS SHALL BE COORDINATED WITH EQUIPMENT MANUFACTURER.
4. COAT DISSIMILAR MATERIALS PER THE CONTRACT DOCUMENTS.
5. STAGGER CHANNEL ANCHORS AND PAD DOWELS.
6. FOR PADS 24" OR GREATER IN DEPTH, PROVIDE #4@8" HORIZONTAL SKIN REINFORCING AROUND PERIMETER OF PAD.

EQUIPMENT PAD

S-03-0504

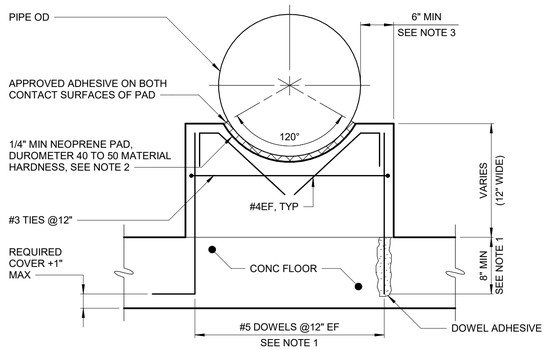

NOTES:
1. DOWELS MAY BE CAST IN WITH 90° HOOK OR ANCHORED WITH DOWEL ADHESIVE AT CONTRACTORS OPTION. WHERE FLOOR IS 8" THICK OR LESS, USE #4 DOWELS EMBEDDED TO WITHIN 2" OF BOTTOM OF FLOOR SLAB.
2. ENGINEER SHALL VERIFY THICKNESS OF PAD WILL ACCOMMODATE DESIGN MOVEMENT, PARTICULARLY FOR OUTSIDE AERIAL PIPE.
3. COORDINATE SUPPORT WIDTH WITH PIPE STRAP ANCHORAGE REQUIREMENTS. PROVIDE 6" MINIMUM, FROM CENTER OF PIPE STRAP ANCHOR ROD TO EDGE OF CONCRETE.

CRADLE PIPE SUPPORT

S-03-0505

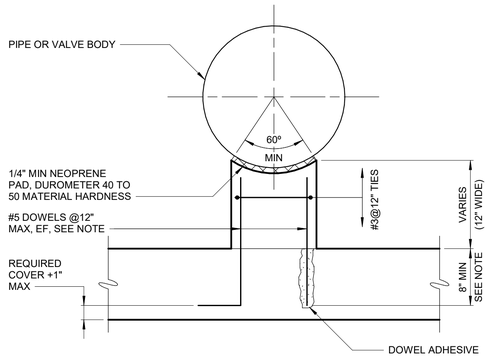

NOTES:
1. DOWELS MAY BE CAST IN WITH 90° HOOK OR ANCHORED WITH DOWEL ADHESIVE AT CONTRACTORS OPTION. WHERE FLOOR IS 8" THICK OR LESS, USE #4 DOWELS EMBEDDED TO WITHIN 2" OF BOTTOM OF FLOOR SLAB.
2. PIER SHALL BE MINIMUM 12" THICK EACH WAY HORIZONTALLY, AND SHALL BE SQUARE UNDER LARGE VALVE BODIES SUCH AS CHECK VALVES.

PIER
PIPE SUPPORT

S-03-0506

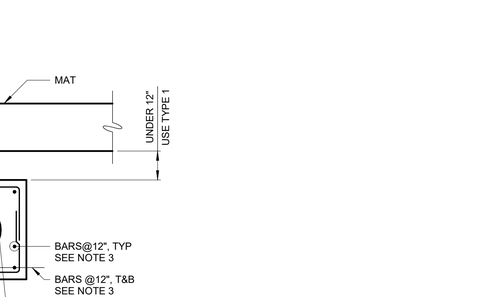

NOTE:
TOTAL AREA OF DOWELS SHALL NOT BE LESS THAN ONE PERCENT OF THE TOTAL PLAN AREA OF THE PEDESTAL, EQUALLY SPACED AROUND ALL 4 SIDES OF PEDESTAL. DOWELS MAY BE CAST IN WITH 90° HOOK OR ANCHORED WITH DOWEL ADHESIVE AT CONTRACTORS OPTION. WHEN DOWEL ADHESIVE IS USED, EMBED TO DEVELOP 125 PERCENT OF YIELD STRENGTH OF DOWELS.

EQUIPMENT SUPPORT PEDESTAL

S-03-0507

WARNING
IT IS A VIOLATION OF SECTION 7209.2 OF THE NEW YORK STATE EDUCATION LAW FOR ANY PERSON, UNLESS ACTING UNDER THE DIRECTION OF A LICENSED PROFESSIONAL ENGINEER, TO ALTER IN ANY WAY PLANS, SPECIFICATIONS, PLATS OR REPORTS TO WHICH THE SEAL OF A PROFESSIONAL ENGINEER HAS BEEN APPLIED. IF AN ITEM BEARING THE SEAL OF A PROFESSIONAL ENGINEER IS ALTERED, THE ALTERING ENGINEER SHALL AFFIX TO THE ITEM HIS SEAL AND THE NOTATION "ALTERED BY" FOLLOWED BY HIS SIGNATURE, THE DATE, AND A SPECIFIC DESCRIPTION OF THE ALTERATION.

REV	ISSUED FOR	DATE	BY

PROJECT ENGINEER:	R. FROST
DESIGNED BY:	J. EDER
DRAWN BY:	R. HERNANDEZ
CHECKED BY:	C. PHILLIPS
IF THIS BAR DOES NOT MEASURE 1" THEN DRAWING IS NOT TO FULL SCALE	0 1/2" 1"

BID SET

STATE OF NEW YORK · JC EDER · 097035 · LICENSED PROFESSIONAL ENGINEER

Hazen
HAZEN AND SAWYER
498 SEVENTH AVENUE, 11th FLOOR
NEW YORK, NEW YORK 10018

WESTCHESTER JOINT WATER WORKS
MAMARONECK, NY

RYE LAKE WATER FILTRATION PLANT
HARRISON, NY

STRUCTURAL STANDARD DETAILS
SHEET 2

DATE:	FEB 2025
HAZEN NO.:	90388-000
CONTRACT NO.:	A1364-A
DRAWING NUMBER:	S-601

Autodesk Docs://90388-000_Rye_Lake_Filtration/90388-000-General-Stru.rvt
2/20/2025 9:46:00 AM

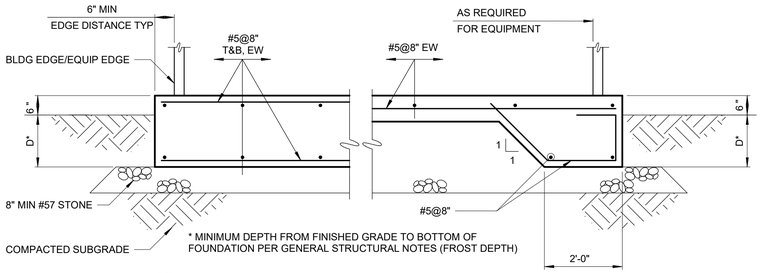

NOTE:
UNLESS NOTED OTHERWISE, CONTRACTOR SHALL HAVE THE OPTION OF PLACING EQUIPMENT FOUNDATION WITH A CONSTANT THICKNESS OF D + 6" OR AS AN 8" SLAB WITH THICKENED EDGE AROUND THE FOUNDATION PERIMETER.

EXTERIOR EQUIPMENT FOUNDATION

S-03-0508

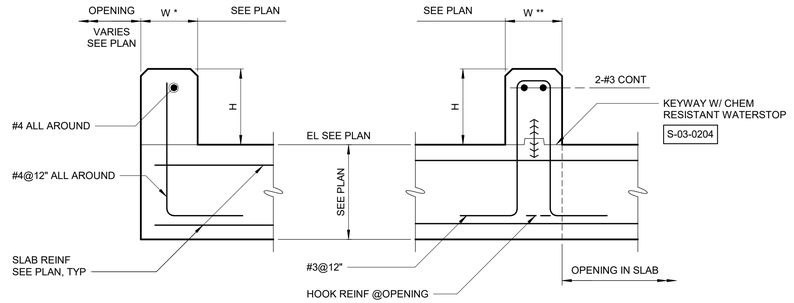

NOTE:
W* DENOTES CURBS LESS THAN 8"
W** DENOTES CURBS EQUAL TO OR GREATER THAN 8" DOWELS MAY BE CAST IN OR ANCHORED WITH D0WEL ADHESIVE SYSTEM WITH A 6" MINIMUM EMBEDMENT. WHERE FLOOR IS 8" THICK OR LESS, USE DOWELS EMBEDDED TO WITHIN 2" OF BOTTOM OF FLOOR SLAB.

CONCRETE CURB

S-03-0603

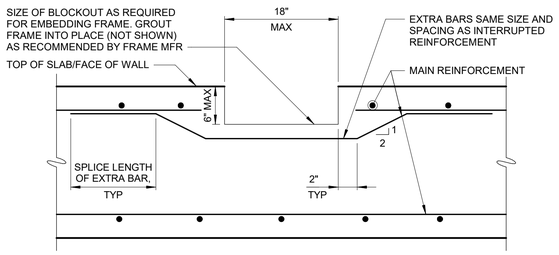

BLOCKOUT FOR EMBEDDED EQUIPMENT FRAME

S-03-0902

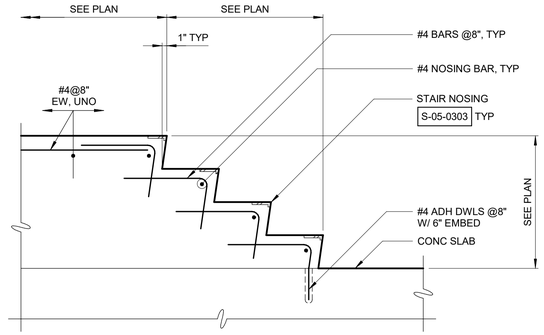

NOTE: GUARDS NOT SHOWN, SEE PLAN.

MASS CONCRETE STAIR

S-03-0605

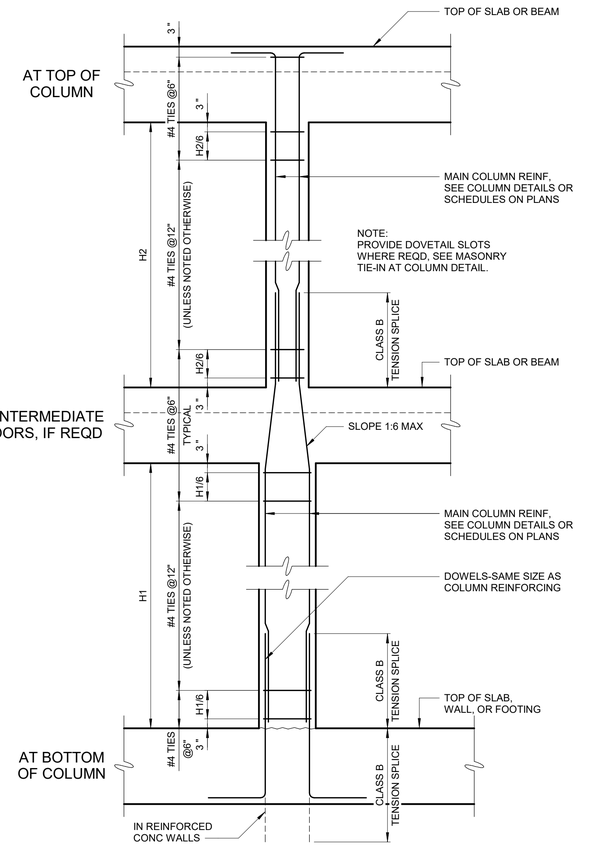

COLUMN ELEVATION

S-03-0802

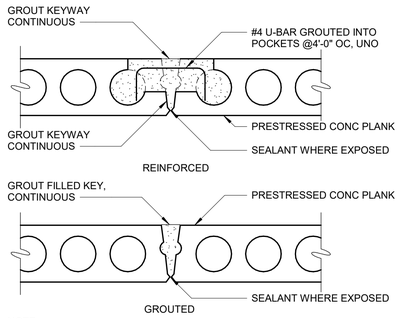

NOTE:
GROUTED CONNECTION SHALL BE USED UNO ON PLANS. REINFORCED CONNECTIONS ARE REQUIRED ONLY WHERE SHOWN ON PLANS.

PRECAST PLANK CONNECTION

S-03-1201

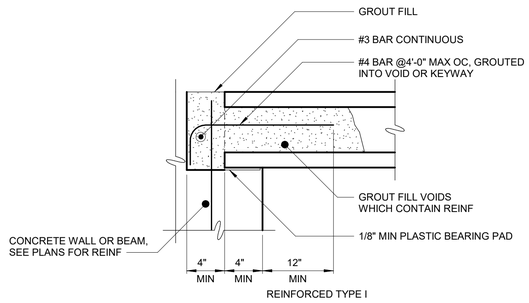

NOTE:
GROUTED DETAIL SHALL BE USED UNLESS OTHERWISE NOTED ON PLANS.

PRECAST PLANK EXTERIOR BEARING ON CONCRETE

S-03-1202

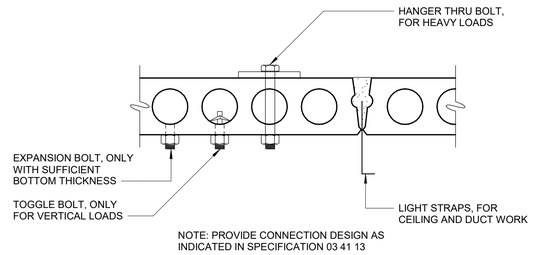

CONNECTION TYPES FOR
HOLLOW CORE SLAB

S-03-1209

WARNING
IT IS A VIOLATION OF SECTION 7209.2 OF THE NEW YORK STATE EDUCATION LAW FOR ANY PERSON, UNLESS ACTING UNDER THE DIRECTION OF A LICENSED PROFESSIONAL ENGINEER, TO ALTER IN ANY WAY PLANS, SPECIFICATIONS, PLATS OR REPORTS TO WHICH THE SEAL OF A PROFESSIONAL ENGINEER HAS BEEN APPLIED. IF AN ITEM BEARING THE SEAL OF A PROFESSIONAL ENGINEER IS ALTERED, THE ALTERING ENGINEER SHALL AFFIX TO THE ITEM HIS SEAL AND THE NOTATION "ALTERED BY" FOLLOWED BY HIS SIGNATURE, THE DATE, AND A SPECIFIC DESCRIPTION OF THE ALTERATION.

REV	ISSUED FOR	DATE	BY

PROJECT ENGINEER:	R. FROST
DESIGNED BY:	J. EDER
DRAWN BY:	R. HERNANDEZ
CHECKED BY:	C. PHILLIPS

IF THIS BAR DOES NOT MEASURE 1" THEN DRAWING IS NOT TO FULL SCALE — 0 1/2" 1"

BID SET

STATE OF NEW YORK · JC EDER · 097035 · LICENSED PROFESSIONAL ENGINEER

Hazen
HAZEN AND SAWYER
498 SEVENTH AVENUE, 11th FLOOR
NEW YORK, NEW YORK 10018

WESTCHESTER JOINT WATER WORKS
MAMARONECK, NY

RYE LAKE WATER FILTRATION PLANT
HARRISON, NY

STRUCTURAL STANDARD DETAILS
SHEET 3

DATE:	FEB 2025
HAZEN NO.:	90388-000
CONTRACT NO.:	A1364-A
DRAWING NUMBER:	S-602

Autodesk Docs://90388-000_Rye_Lake_Filtration/90388-000-General-Stru.rvt
2/20/2025 9:46:01 AM

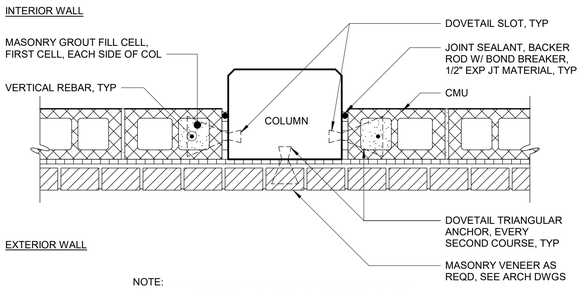

NOTE:
JOINT REINFORCING AND MASONRY ACCESSORIES NOT SHOWN FOR CLARITY. SEE ARCHITECTURAL DRAWINGS.

MASONRY TIE-IN AT COLUMN

S-04-0103

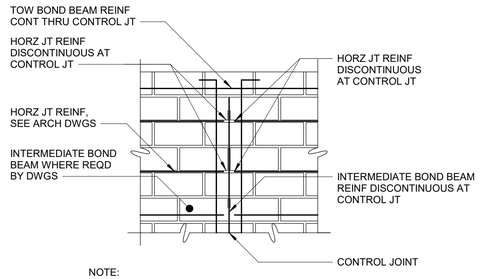

NOTE:
CONTROL JOINTS MAY BE OFFSET A MAXIMUM DISTANCE OF 8". HORIZONTAL JOINT REINFORCING WITHIN THIS OFFSET SHALL BE CUT.

ELEVATION

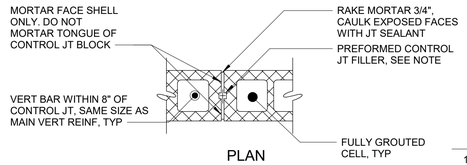

PLAN

NOTE:
WIDE FLANGED PREFORMED CONTROL JOINT FILLER MAY BE USED.

CONTROL JOINT BLOCK

S-04-0105

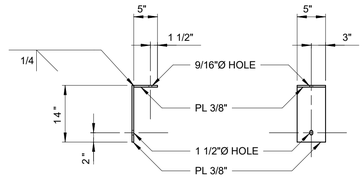

ELEVATION

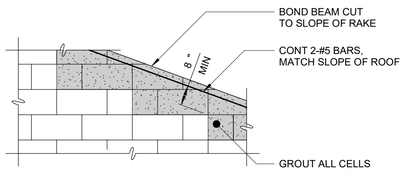

CMU WALL AT RAKE

S-04-0204

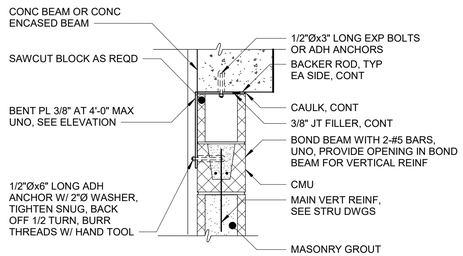

MASONRY WALL TO CONCRETE CONNECTION

S-04-0109

CMU OPENING REINFORCEMENT SCHEDULE

"W" OPNG WIDTH	LINTEL DEPTH	LINTEL STIRRUP	"A" BAR LINTEL	"B" BAR JAMB	"J" MIN JAMB WIDTH
UP TO 2'-8"	8"	-	#5 BAR	1-#5 BAR EA JAMB	8"
>2'-8" <= 4'-0"	8"	-	2-#5 BARS	1-#5 BAR EA JAMB	8"
>4'-0" <= 6'-0"	16"	#3@8"	2-#5 BARS	2-#5 BAR EA JAMB	16"
>6'-0" <= 8'-0"	24"	#3@8"	2-#5 BARS	2-#5 BAR EA JAMB	16"
>8-0" <= 12'-0"	24" *	#3@8"	2-#5 BARS	3-#5 BAR EA JAMB	24"
24" WIDE LOUVER AT COL LINE 1	16"	#3@8"	2-#6 BARS	3-#5 BAR EA JAMB	24"

* 16" AT TRANSLUCENT PANELS

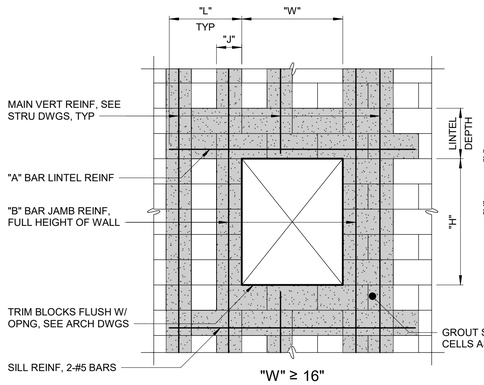

"W" ≥ 16"

NOTE:
"L" = 25" FOR #4 AND #5 BARS
"L" = 30 INCHES FOR #6 BARS

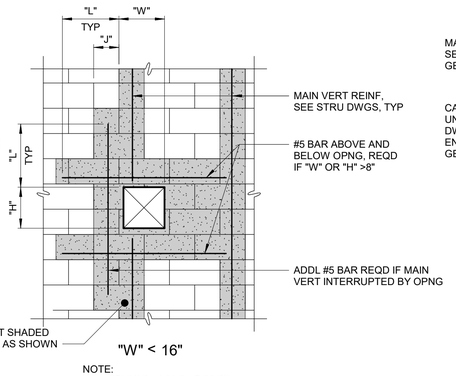

"W" < 16"

NOTE:
"L" = 25" FOR #4 AND #5 BARS
"L" = 30 INCHES FOR #6 BARS

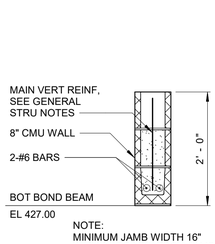

NOTE:
MINIMUM JAMB WIDTH 16" WITH 2-#5 BARS, EACH JAMB.

8" LINTEL ABOVE TRANSLUCENT WALL SYSTEMS AND 24' - 0" WIDE LOUVER

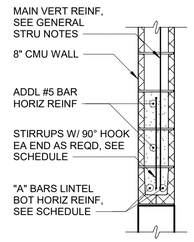

8" LINTEL SECTION

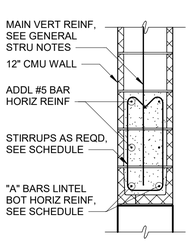

12" LINTEL SECTION

TYPICAL MASONRY OPENINGS

S-04-0202

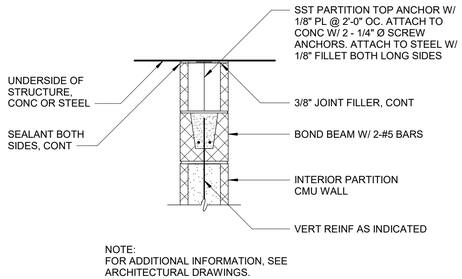

NOTE:
FOR ADDITIONAL INFORMATION, SEE ARCHITECTURAL DRAWINGS.

TOP OF CMU WALLS FOR INTERIOR WALLS

S-04-0205

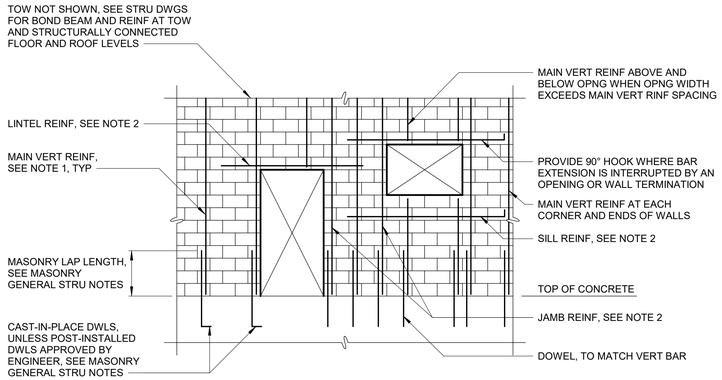

NOTES:
1. FOR MAIN VERTICAL REINFORCING, SEE STRUCTURAL DRAWINGS. PROVIDE 90 DEGREE HOOK AT TOP OF WALL UNLESS NOTED OTHERWISE.
2. FOR LINTEL AND REINFORCING AT OPENINGS, SEE DETAIL S-04-0202.
3. JOINT REINFORCING NOT SHOWN FOR CLARITY. SEE ARCHITECTURAL DRAWINGS.

TYPICAL MASONRY REINFORCING ELEVATION

S-04-0201

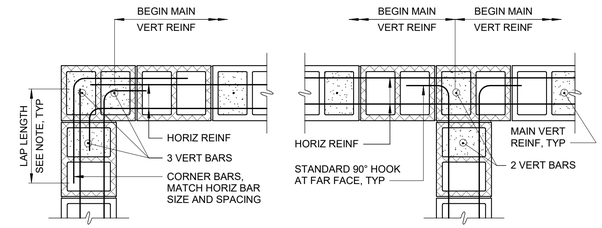

DOUBLE MAT EXTERIOR CORNER PLAN

DOUBLE MAT INTERIOR CORNER PLAN

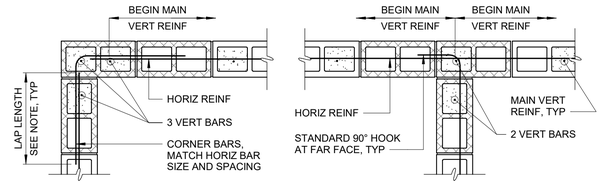

SINGLE MAT EXTERIOR CORNER PLAN

SINGLE MAT INTERIOR CORNER PLAN

NOTES:
1. SEE MASONRY GENERAL STRUCTURAL NOTES FOR LAP SPLICE LENGTH REQUIREMENTS.
2. DETAIL APPLIES TO BOND BEAM HORIZONTAL REINFORCING.

TYPICAL MASONRY WALL INTERSECTION REINFORCING

S-04-0203

WARNING
IT IS A VIOLATION OF SECTION 7209.2 OF THE NEW YORK STATE EDUCATION LAW FOR ANY PERSON, UNLESS ACTING UNDER THE DIRECTION OF A LICENSED PROFESSIONAL ENGINEER, TO ALTER IN ANY WAY PLANS, SPECIFICATIONS, PLATS OR REPORTS TO WHICH THE SEAL OF A PROFESSIONAL ENGINEER HAS BEEN APPLIED. IF AN ITEM BEARING THE SEAL OF A PROFESSIONAL ENGINEER IS ALTERED, THE ALTERING ENGINEER SHALL AFFIX TO THE ITEM HIS SEAL AND THE NOTATION "ALTERED BY" FOLLOWED BY HIS SIGNATURE, THE DATE, AND A SPECIFIC DESCRIPTION OF THE ALTERATION.

REV	ISSUED FOR	DATE	BY

PROJECT ENGINEER:	R. FROST
DESIGNED BY:	J. EDER
DRAWN BY:	R. HERNANDEZ
CHECKED BY:	C. PHILLIPS

IF THIS BAR DOES NOT MEASURE 1" THEN DRAWING IS NOT TO FULL SCALE 0 1/2" 1"

BID SET

STATE OF NEW YORK · JC EDER · 097035 · LICENSED PROFESSIONAL ENGINEER

Hazen
HAZEN AND SAWYER
498 SEVENTH AVENUE, 11th FLOOR
NEW YORK, NEW YORK 10018

WESTCHESTER JOINT WATER WORKS
MAMARONECK, NY

RYE LAKE WATER FILTRATION PLANT
HARRISON, NY

STRUCTURAL STANDARD DETAILS
SHEET 4

DATE:	FEB 2025
HAZEN NO.:	90388-000
CONTRACT NO.:	A1364-A
DRAWING NUMBER:	S-603

Autodesk Docs://90388-000_Rye_Lake_Filtration/90388-000-General-Stru.rvt
2/20/2025 9:46:02 AM

NOMINAL BEAM DEPTH, INCHES	(n) ROWS	L, INCHES
8-10	2	5 1/2"
12-15	3	8 1/2"
16-18	4	11 1/2"
21	5	1'-2 1/2"
24	6	1'-5 1/2"
27	7	1'-8 1/2"
30	8	1'-11 1/2"
33	9	2'-2 1/2"
36	10	2'-5 1/2"

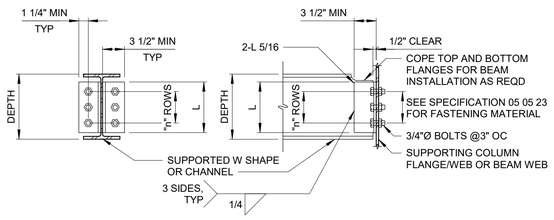

TYPE I DOUBLE ANGLE

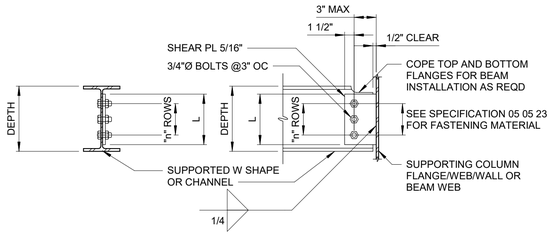

TYPE II SINGLE PLATE

NOTES:
1. TYPE I DOUBLE ANGLE CONNECTION SHALL BE USED UNO ON DRAWINGS.
2. TYPE II CONNECTIONS SHALL BE USED AT ALL BEAM CONNECTIONS TO HSS COLUMNS.

STEEL FRAMING CONNECTION
S-05-0102

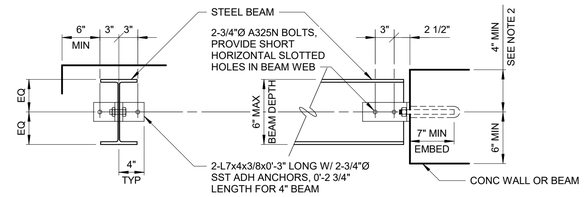

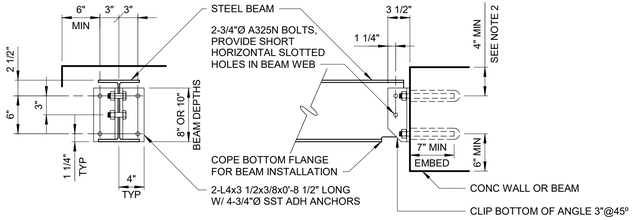

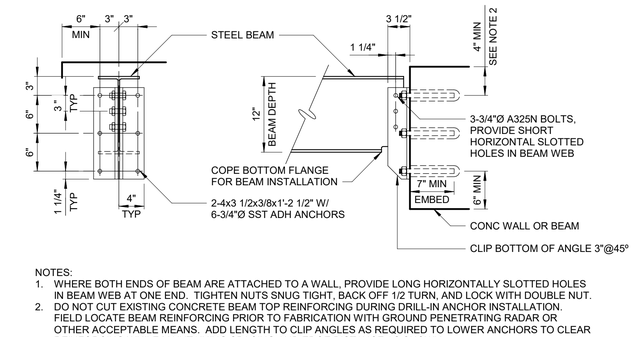

NOTES:
1. WHERE BOTH ENDS OF BEAM ARE ATTACHED TO A WALL, PROVIDE LONG HORIZONTALLY SLOTTED HOLES IN BEAM WEB AT ONE END. TIGHTEN NUTS SNUG TIGHT, BACK OFF 1/2 TURN, AND LOCK WITH DOUBLE NUT.
2. DO NOT CUT EXISTING CONCRETE BEAM TOP REINFORCING DURING DRILL-IN ANCHOR INSTALLATION. FIELD LOCATE BEAM REINFORCING PRIOR TO FABRICATION WITH GROUND PENETRATING RADAR OR OTHER ACCEPTABLE MEANS. ADD LENGTH TO CLIP ANGLES AS REQUIRED TO LOWER ANCHORS TO CLEAR REINFORCING WHILE MAINTAINING SPACING AND EDGE DISTANCE AS SHOWN.

STEEL BEAM TO CONCRETE CONNECTION
S-05-0103

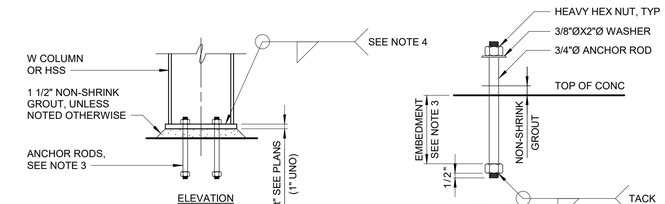

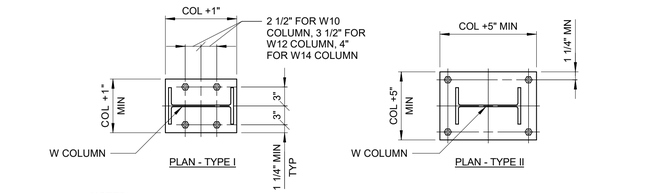

NOTES:
1. TYPE I COLUMN BASE PLATE SHALL BE USED UNLESS NOTED OTHERWISE ON THE DRAWINGS.
2. ALL COLUMN BASEPLATES SHALL BE ASTM A572 GRADE 50.
3. UNLESS OTHERWISE NOTED, ANCHOR RODS SHALL BE 3/4" DIAMETER x REQUIRED LENGTH WITH LEVELING NUTS AND 1'-0" MINIMUM EMBED. BASE PLATES SHALL BE CENTERED ON COLUMN.
4. WELD SIZE SHALL BE DETERMINED BY THE THICKEST MEMBER JOINED; MINIMUM WELD SIZE SHALL BE 3/16" FILLET FOR MATERIAL THICKNESS UP TO AND INCLUDING 1/2", 1/4" FILLET FOR THICKNESS OVER 1/2" TO 3/4", AND 5/16" FILLET FOR MATERIAL THICKNESS OVER 3/4". ALL WELDS SHALL BE SINGLE-PASS WELDS.
5. PROVIDE HOLE DIAMETER PER AISC RECOMMENDATIONS.

COLUMN BASE - STEEL
S-05-0104

WARNING
IT IS A VIOLATION OF SECTION 7209.2 OF THE NEW YORK STATE EDUCATION LAW FOR ANY PERSON, UNLESS ACTING UNDER THE DIRECTION OF A LICENSED PROFESSIONAL ENGINEER, TO ALTER IN ANY WAY PLANS, SPECIFICATIONS, PLATS OR REPORTS TO WHICH THE SEAL OF A PROFESSIONAL ENGINEER HAS BEEN APPLIED. IF AN ITEM BEARING THE SEAL OF A PROFESSIONAL ENGINEER IS ALTERED, THE ALTERING ENGINEER SHALL AFFIX TO THE ITEM HIS SEAL AND THE NOTATION "ALTERED BY" FOLLOWED BY HIS SIGNATURE, THE DATE, AND A SPECIFIC DESCRIPTION OF THE ALTERATION.

REV	ISSUED FOR	DATE	BY

PROJECT ENGINEER:	R. FROST
DESIGNED BY:	J. EDER
DRAWN BY:	R. HERNANDEZ
CHECKED BY:	C. PHILLIPS
IF THIS BAR DOES NOT MEASURE 1" THEN DRAWING IS NOT TO FULL SCALE	0 1/2" 1"

BID SET

STATE OF NEW YORK · JC EDER · 097035 · LICENSED PROFESSIONAL ENGINEER

Hazen
HAZEN AND SAWYER
498 SEVENTH AVENUE, 11th FLOOR
NEW YORK, NEW YORK 10018

WESTCHESTER JOINT WATER WORKS
MAMARONECK, NY

RYE LAKE WATER FILTRATION PLANT
HARRISON, NY

STRUCTURAL STANDARD DETAILS
SHEET 5

DATE:	FEB 2025
HAZEN NO.:	90388-000
CONTRACT NO.:	A1364-A
DRAWING NUMBER:	S-604

Autodesk Docs://90388-000_Rye_Lake_Filtration/90388-000-General-Stru.rvt
2/20/2025 9:46:03 AM

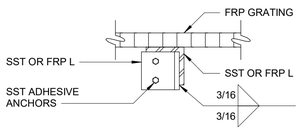

DETAIL

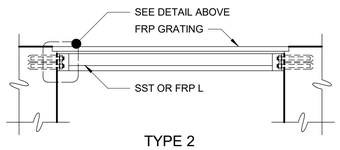

TYPE 2

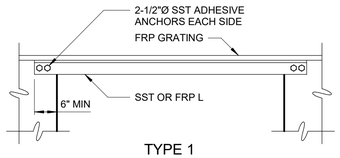

TYPE 1

CHANNEL GRATING SUPPORT

S-05-0203

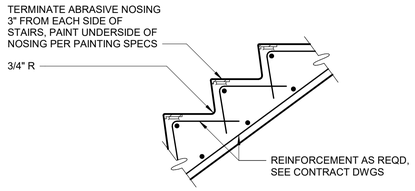

STAIR NOSING

S-05-0303

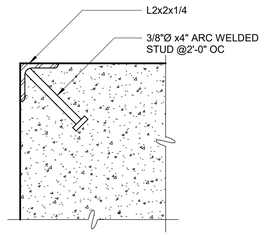

NOTE:
CORNER GUARD REQUIRED ONLY WHERE SHOWN ON PLANS

CORNER GUARD

S-05-0304

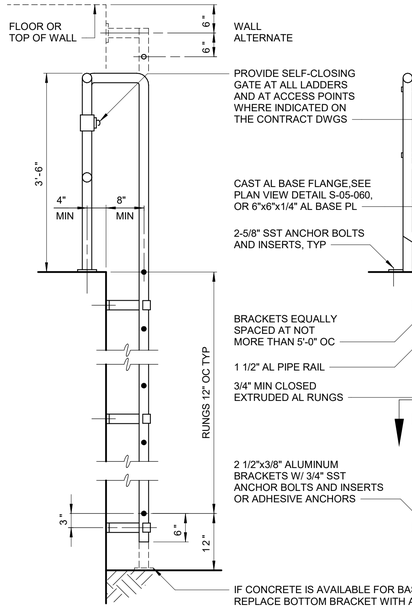

ALUMINUM LADDER

S-05-0501

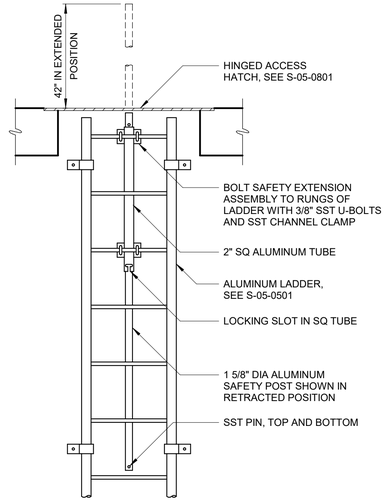

RETRACTABLE SAFETY EXTENSION

S-05-0504

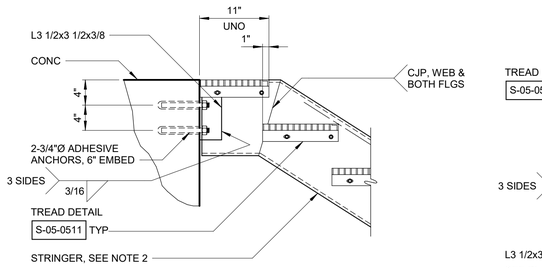

UPPER CRIPPLED STRINGER CONNECTION TO CONCRETE

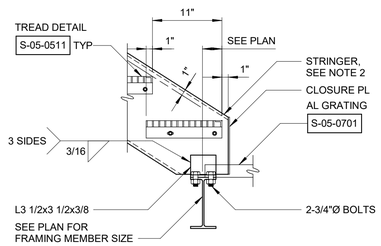

LOWER STRINGER CONNECTION TO FRAMING MEMBER

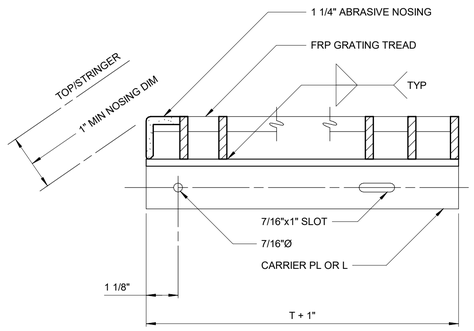

TREAD DETAIL

S-05-0511

NOTES:
1. PROVIDE PROTECTION FOR DISSIMILAR METALS AND CONCRETE PER SPECIFICATIONS.
2. PROVIDE C12x20.7 STRINGERS.
3. STAIR GUARDS AND TOEBOARD NOT SHOWN FOR CLARITY.
4. BOLTS FOR CARBON STEEL STAIRS SHALL BE GRADE A325, UNLESS NOTED OTHERWISE.
5. FIELD VERIFY ALL DIMENSIONS AND ELEVATIONS PRIOR TO FABRICATION.
6. CLOSURE PLATES, ANGLES AND OTHER APPURTENANCES SHALL MATCH STRINGER MATERIAL.

METAL STAIRS

S-05-0512

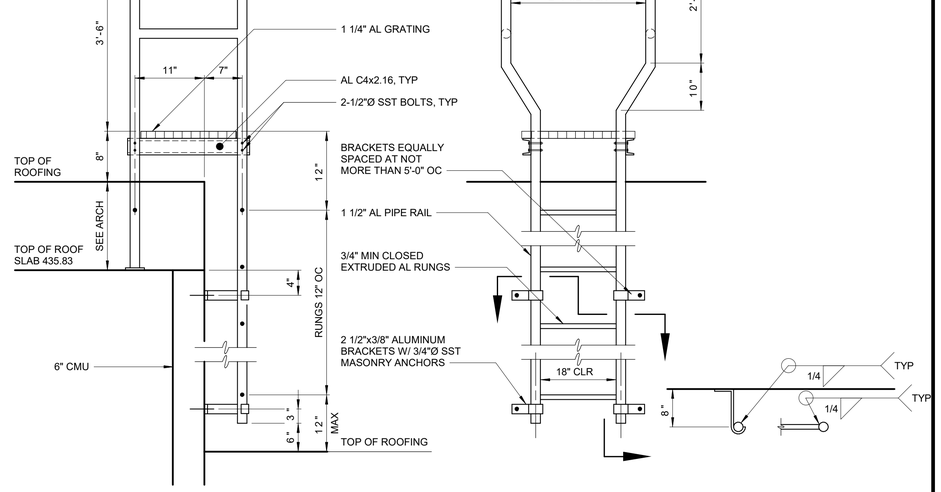

NOTE:
SEE SPECIFICATION SECTION 05 51 33 FOR SAFETY LADDER SYSTEM REQUIREMENTS.

CROSSOVER ALUMINUM LADDER

S-05-0506

WARNING
IT IS A VIOLATION OF SECTION 7209.2 OF THE NEW YORK STATE EDUCATION LAW FOR ANY PERSON, UNLESS ACTING UNDER THE DIRECTION OF A LICENSED PROFESSIONAL ENGINEER, TO ALTER IN ANY WAY PLANS, SPECIFICATIONS, PLATS OR REPORTS TO WHICH THE SEAL OF A PROFESSIONAL ENGINEER HAS BEEN APPLIED. IF AN ITEM BEARING THE SEAL OF A PROFESSIONAL ENGINEER IS ALTERED, THE ALTERING ENGINEER SHALL AFFIX TO THE ITEM HIS SEAL AND THE NOTATION "ALTERED BY" FOLLOWED BY HIS SIGNATURE, THE DATE, AND A SPECIFIC DESCRIPTION OF THE ALTERATION.

REV	ISSUED FOR	DATE	BY

PROJECT ENGINEER:	R. FROST
DESIGNED BY:	J. EDER
DRAWN BY:	R. HERNANDEZ
CHECKED BY:	C. PHILLIPS

IF THIS BAR DOES NOT MEASURE 1" THEN DRAWING IS NOT TO FULL SCALE (0, 1/2", 1")

BID SET

STATE OF NEW YORK · JC EDER · 097035 · LICENSED PROFESSIONAL ENGINEER

Hazen
HAZEN AND SAWYER
498 SEVENTH AVENUE, 11th FLOOR
NEW YORK, NEW YORK 10018

WESTCHESTER JOINT WATER WORKS
MAMARONECK, NY

RYE LAKE WATER FILTRATION PLANT
HARRISON, NY

STRUCTURAL STANDARD DETAILS
SHEET 6

DATE:	FEB 2025
HAZEN NO.:	90388-000
CONTRACT NO.:	A1364-A
DRAWING NUMBER:	S-605

Autodesk Docs://90388-000_Rye_Lake_Filtration/90388-000-General-Stru.rvt
2/20/2025 9:46:03 AM

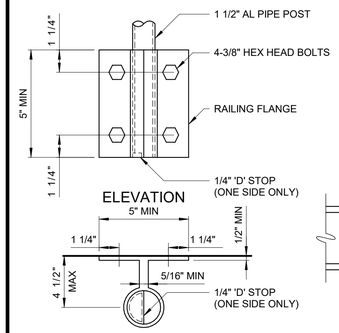

SIDE MOUNT
TO METAL

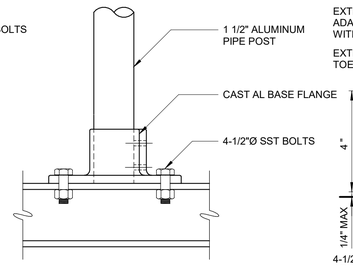

SURFACE MOUNTED
TO METAL

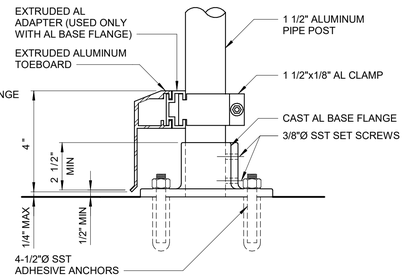

SURFACE MOUNTED
TO CONCRETE

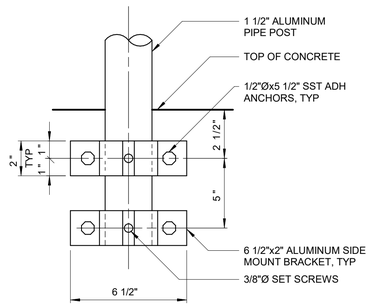

SIDE MOUNT
TO CONCRETE

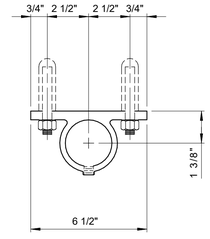

PLAN

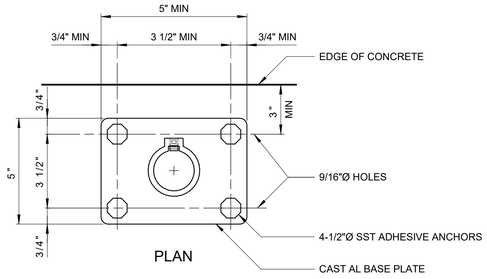

PLAN

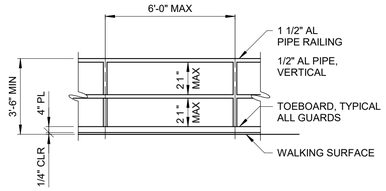

ELEVATION

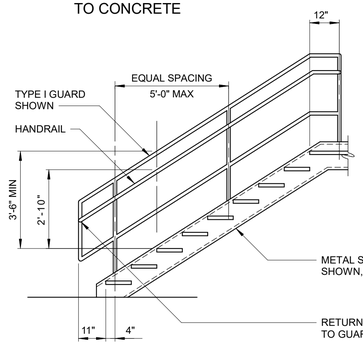

METAL GUARDS AND HANDRAILS

S-05-0601

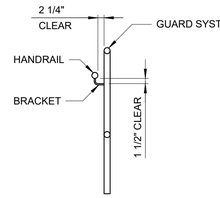

STAIR GUARD SECTION

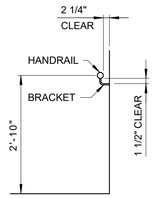

WALL HANDRAIL

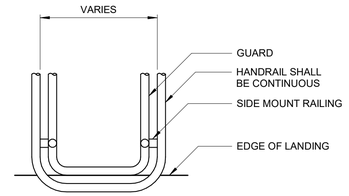

TYPICAL STAIR
HANDRAIL TURN

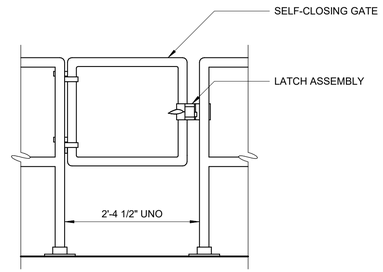

GUARD GATE

S-05-0603

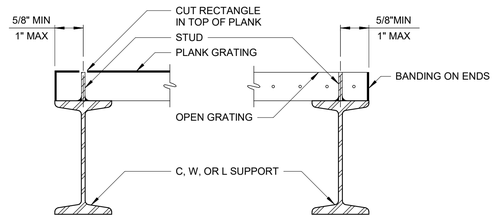

SECTION A - A

SECTION B - B

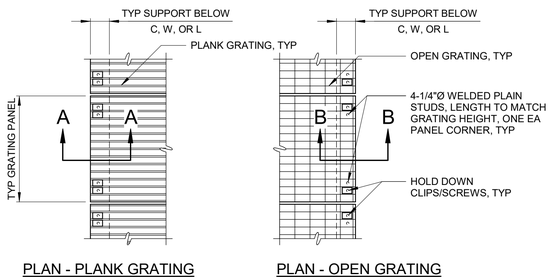

PLAN - PLANK GRATING

PLAN - OPEN GRATING

NOTES:
1. STUDS SHALL BE:
   METAL GRATING - 1/4" Ø WELDED PLAIN STUD OF SAME MATERIAL AS SUPPORT, WITH STUDS WELDED PER AWS REQUIREMENTS.
   FRP GRATING - #14 SST TEK SCREWS, SELF-DRILLED INTO THE BASE MATERIAL.
2. INSTALLED STUD SHALL MATCH GRATING HEIGHT.
3. STUD SHALL BE PLACED BETWEEN CROSS BAR(S) AND/OR BEARING BARS.

GRATING CONFINEMENT USING STUDS

S-05-0706

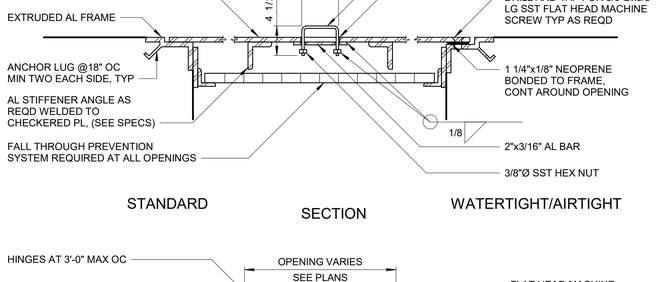

STANDARD

SECTION

WATERTIGHT/AIRTIGHT

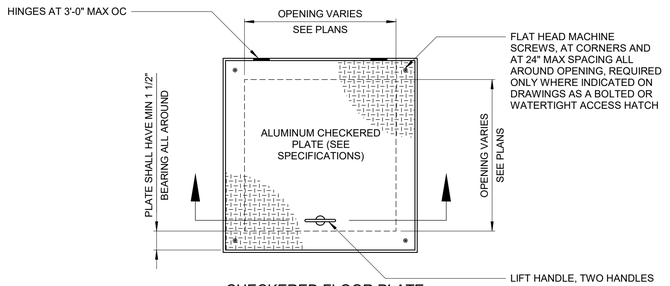

CHECKERED FLOOR PLATE

S-05-0801

WARNING
IT IS A VIOLATION OF SECTION 7209.2 OF THE NEW YORK STATE EDUCATION LAW FOR ANY PERSON, UNLESS ACTING UNDER THE DIRECTION OF A LICENSED PROFESSIONAL ENGINEER, TO ALTER IN ANY WAY PLANS, SPECIFICATIONS, PLATS OR REPORTS TO WHICH THE SEAL OF A PROFESSIONAL ENGINEER HAS BEEN APPLIED. IF AN ITEM BEARING THE SEAL OF A PROFESSIONAL ENGINEER IS ALTERED, THE ALTERING ENGINEER SHALL AFFIX TO THE ITEM HIS SEAL AND THE NOTATION "ALTERED BY" FOLLOWED BY HIS SIGNATURE, THE DATE, AND A SPECIFIC DESCRIPTION OF THE ALTERATION.

REV	ISSUED FOR	DATE	BY

PROJECT ENGINEER:	R. FROST
DESIGNED BY:	J. EDER
DRAWN BY:	R. HERNANDEZ
CHECKED BY:	C. PHILLIPS

IF THIS BAR DOES NOT MEASURE 1" THEN DRAWING IS NOT TO FULL SCALE (0, 1/2", 1")

BID SET

STATE OF NEW YORK · JC EDER · 097035 · LICENSED PROFESSIONAL ENGINEER

Hazen

HAZEN AND SAWYER
498 SEVENTH AVENUE, 11th FLOOR
NEW YORK, NEW YORK 10018

WESTCHESTER JOINT WATER WORKS
MAMARONECK, NY

RYE LAKE WATER FILTRATION PLANT
HARRISON, NY

STRUCTURAL STANDARD DETAILS
SHEET 7

DATE:	FEB 2025
HAZEN NO.:	90388-000
CONTRACT NO.:	A1364-A
DRAWING NUMBER:	S-606

Autodesk Docs://90388-000_Rye_Lake_Filtration/90388-000-General-Stru.rvt
2/20/2025 9:46:04 AM

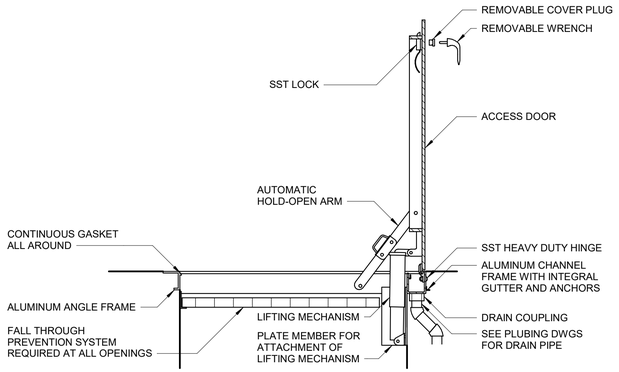

ANGLE FRAME SECTION CHANNEL FRAME/WATERTIGHT

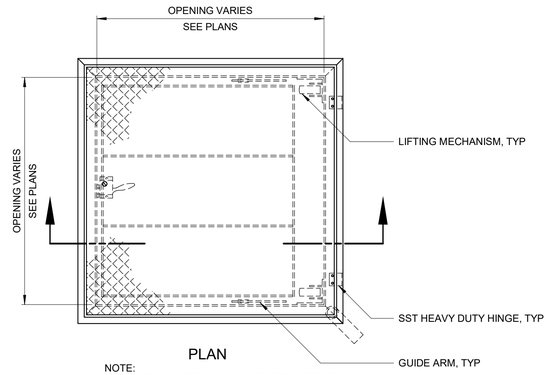

PLAN

NOTE:
OPENINGS LARGER THAN 42 INCHES IN EITHER DIRECTION SHALL HAVE DOUBLE LEAF DOORS.

AL ACCESS DOOR
S-05-0806

SPAN, S	DEPTH (MIN)	CONCRETE ANCHOR (SIZE AND SPACING)
0'-0" < S ≤ 3'-6"	1 1/2"	1/2"∅x5 1/2" @ 18"
3'-6"< S ≤ 5'-0"	2"	5/8"∅x6" @ 18"

SCHEDULE BASED ON 150 PSF

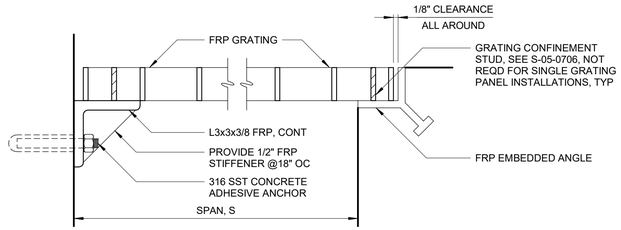

AT WALL AT FLOOR

FRP GRATING
S-06-0101

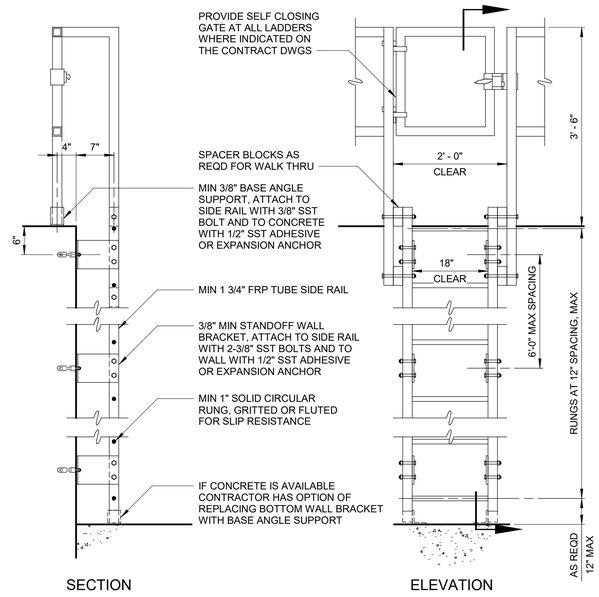

SECTION ELEVATION

FRP LADDER

S-06-0201

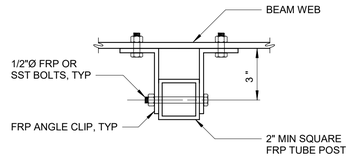

SIDE MOUNT

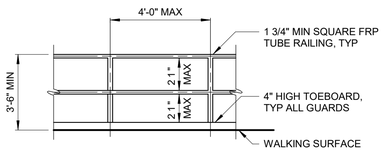

ELEVATION

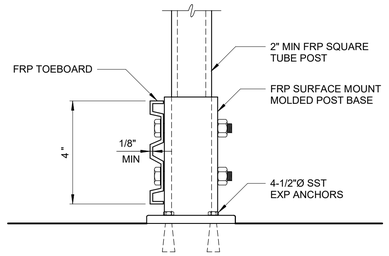

SURFACE MOUNTED TO CONCRETE

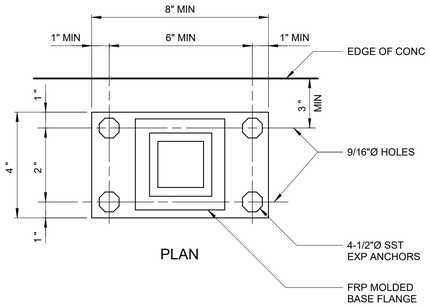

PLAN

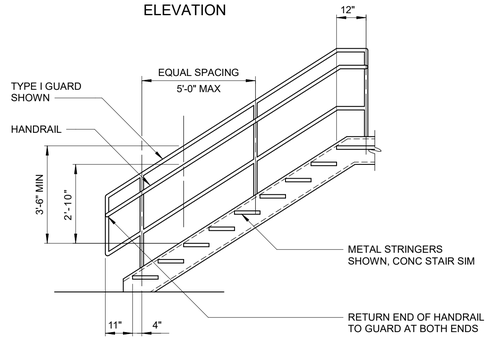

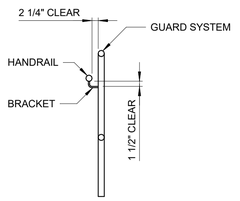

STAIR GUARD SECTION

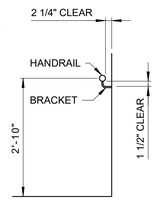

WALL HANDRAIL

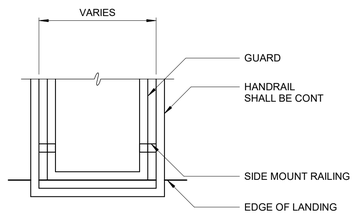

TYPICAL STAIR HANDRAIL TURN

FRP GUARDS AND HANDRAIL SYSTEM

S-06-0303

WARNING
IT IS A VIOLATION OF SECTION 7209.2 OF THE NEW YORK STATE EDUCATION LAW FOR ANY PERSON, UNLESS ACTING UNDER THE DIRECTION OF A LICENSED PROFESSIONAL ENGINEER, TO ALTER IN ANY WAY PLANS, SPECIFICATIONS, PLATS OR REPORTS TO WHICH THE SEAL OF A PROFESSIONAL ENGINEER HAS BEEN APPLIED. IF AN ITEM BEARING THE SEAL OF A PROFESSIONAL ENGINEER IS ALTERED, THE ALTERING ENGINEER SHALL AFFIX TO THE ITEM HIS SEAL AND THE NOTATION "ALTERED BY" FOLLOWED BY HIS SIGNATURE, THE DATE, AND A SPECIFIC DESCRIPTION OF THE ALTERATION.

REV	ISSUED FOR	DATE	BY

PROJECT ENGINEER:	R. FROST
DESIGNED BY:	J. EDER
DRAWN BY:	R. HERNANDEZ
CHECKED BY:	C. PHILLIPS

IF THIS BAR DOES NOT MEASURE 1" THEN DRAWING IS NOT TO FULL SCALE 0 1/2" 1"

BID SET

STATE OF NEW YORK JC EDER 097035 LICENSED PROFESSIONAL ENGINEER

Hazen

HAZEN AND SAWYER
498 SEVENTH AVENUE, 11th FLOOR
NEW YORK, NEW YORK 10018

WESTCHESTER JOINT WATER WORKS
MAMARONECK, NY

RYE LAKE WATER FILTRATION PLANT
HARRISON, NY

STRUCTURAL STANDARD DETAILS
SHEET 8

DATE:	FEB 2025
HAZEN NO.:	90388-000
CONTRACT NO.:	A1364-A
DRAWING NUMBER:	S-607

Autodesk Docs://90388-000_Rye_Lake_Filtration/90388-000-General-Stru.rvt
2/20/2025 9:46:04 AM

ABBREVIATIONS

AB	ANCHOR BOLT
ABW	AUTOMATIC BACKWASH
AC	ALTERNATING CURRENT / ASBESTOS CEMENT / AIR CONDITIONING
ACCU	AIR COOLED CONDENSING UNIT
ACH	AIR CHANGES PER HOUR
ACT	ACOUSTIC TILE
AD	AREA DRAIN
ADDL	ADDITIONAL
ADJ	ADJUSTABLE
AFF	ABOVE FINISHED FLOOR
AGGR	AGGREGATE
AHU	AIR HANDLING UNIT
AI	ANALOG INPUT
AL	ALUMINUM
ALLOW	ALLOWANCE/ALLOWABLE
ALT	ALTERNATE
AO	ANALOG OUTPUT
APPROX	APPROXIMATE
ARCH	ARCHITECTURAL
ASB	ASBESTOS
ASPH	ASPHALT
ASME	AMERICAN SOCIETY OF MECHANICAL ENGINEERS
ASTM	AMERICAN SOCIETY FOR TESTING AND MATERIALS
AT	ASPHALT TILE
ATC	AUTOMATIC TEMPERATURE CONTROL
B	BORING
BD	BOARD
BFE	BOTTOM OF FITTING ELEV
BFP	BACKFLOW PREVENTER
BFPA	BACKFLOW PREVENTER ASSEMBLY
BFV	BUTTERFLY VALVE
BHP	BRAKE HORSE POWER
BITUM	BITUMINOUS
BL	BASE LINE/ BUILDING LINE
BLCP	BOILER LOCAL CONTROL PANEL
BLDG	BUILDING
BLK	BLOCK
BM	BENCH MARK
BMCP	BOILER MASTER CONTROL PANEL
BOC	BACK OF CURB
BOD	BOTTOM OF DUCT
BOT	BOTTOM
BRG	BEARING
BRK	BRICK
BRZ	BRONZE
BSMT	BASEMENT
BT	BOLT
BTU	BRITISH THERMAL UNIT
BUR	BUILT-UP ROOFING
BV	BALL VALVE
C	CLOSET/CARPET/CHANNEL
CAB	CABINET
CB	CATCH BASIN
C/C	CENTER TO CENTER
CCP	CENTRIFUGE CONTROL PANEL
CD	CEILING DIFFUSER
CE	CONSTRUCTION EASEMENT
CEM	CEMENT
CER	CERAMIC
CF	CUBIC FEET
CFM	CUBIC FEET PER MINUTE
CFT	CHEMICAL FEED TANK
CI	CAST IRON/ CUBIC INCHES
CISPI	CAST IRON SOIL PIPE INSTITUTE
CIP	CAST IRON PIPE
CL	CENTER LINE / CHLORINE / CLOSET
CLG	CEILING
CLKG	CAULKING
CLR	CLEAR
CLW	CLEAR WATER DRAIN
CMP	CORRUGATED METAL PIPE
CMU	CONCRETE MASONRY UNIT
CO2	CARBON DIOXIDE
CO	CLEANOUT
COAG	COAGULANT
CODP	CLEANOUT DECK PLATE
COL	COLUMN
COMP	COMPRESSOR
CONC	CONCRETE
CONN	CONNECTION
CONST	CONSTRUCTION
CONT	CONTINUOUS
CONTR	CONTRACTOR
CONV	CONVEYOR
CORP	CORPORATION
CORR	CORRIDOR
CP	CONCRETE PLANK
CPP	CENTRIFUGE POWER PANEL
CPVC	CHLORINATED POLYVINYL CHLORIDE
CRS	COURSE
CT	CERAMIC TILE
CTJ	CONTROL JOINT
CU	COPPER
CV	CHECK VALVE
CW	COLD WATER
CY	CUBIC YARD
DAF	DISSOLVED AIR FLOTATION
DB	DRY BULB
DC	DIRECT CURRENT
DCDA	DOUBLE CHECK DETECTOR ASSEMBLY
DET	DETAIL
DF	DRINKING FOUNTAIN
DFU	DRAINAGE FIXTURE UNIT
DHU	DEHUMIDIFICATION UNIT
DI	DISCRETE INPUT
DIA (Ø)	DIAMETER
DIAG	DIAGONAL
DIM	DIMENSION
DIP	DUCTILE IRON PIPE
DISCH	DISCHARGE
DIST	DISTRIBUTION
DJ	DOUBLE JOINT
DL	DEAD LOAD
DN	DOWN
DO	DISCRETE OUTPUT
DOZ	DOZEN
DPIT	DIFFERENTIAL PRESSURE INDICATING TRANSMITTER
DPOL	DEWATERING POLYMER
DPSL	DIFFERENTIAL PRESSURE SENSOR LOW
DR	DOOR
DWG	DRAWING
DWH	DOMESTIC WATER HEATER
DWL	DOWEL
DWV	DRAINAGE, WASTE AND VENT
DX	DIRECT EXPANSION
E	EAST/ EASEMENT
EA	EACH / EXHAUST AIR
EAT	ENTERING AIR TEMPERATURE
ECC	ECCENTRIC
EF	EACH FACE / EXHAUST FAN
EFF	EFFLUENT / EFFICIENCY
EIP	EXIST IRON PIPE
EJ	EXPANSION JOINT
EL	ELEVATION
ELEC	ELECTRIC/ ELECTRICAL
ELL	ELBOW
EMB	EMBEDDED
ENGR	ENGINEER
ENT	ENTRANCE
EOG	EDGE OF GRAVEL
EOP	EDGE OF PAVEMENT
EQ	EQUAL
EQPT	EQUIPMENT
ES	ELECTRIC POWER SUPPLY
ESD	EMERGENCY SHUTDOWN STATION
ESE	EMERGENCY SHOWER AND EYEWASH
ESP	EXTERNAL STATIC PRESSURE
ET	EXPANSION TANK
ETC	ET CETERA
EUH	ELECTRIC UNIT HEATER
EW	EACH WAY
EWT	ENTERING WATER TEMPERATURE
EX	EXISTING
EXC	EXCAVATE
EXH	EXHAUST
EXP	EXPANSION
EXT	EXTERIOR
F	FLUORINE / FAHRENHEIT
FAB	FABRICATE
FACP	FIRE ALARM CONTROL PANEL
F&C	FRAME AND COVER
F&G	FRAME AND GRATE
FC	FLUSHING CONNECTION
FD	FLOOR DRAIN / FIRE DAMPER
FDC	FIRE DEPARTMENT CONNECTION
FDN	FOUNDATION
FE	FIRE EXTINGUISHER
FF	FINISHED FLOOR
FH	FIRE HYDRANT
FIN	FINISH
FIX	FIXTURE
FL	FLASHING/ FLOOR
FLEX	FLEXIBLE
FLG	FLANGE
FLUOR	FLUORESCENT
FLXC	FLEXIBLE CONNECTION
FM	FLOW METER
FP	FIRE PROTECTION
FPRF	FIREPROOF
FRP	FIBERGLASS REINFORCED POLYESTER LAMINATE
FS	FLOW SWITCH
FT	FEET
FTG	FOOTING/ FITTING
FURR	FURRING/ FURRED
G	GAS/ GAS LINE
GA	GAUGE
GAC	GRANULAR ACTIVATED CARBON
GAL	GALLON
GALV	GALVANIZED
GC	GENERAL CONTRACTOR
GD	GRAVITY DAMPER
GEN	GENERATOR
GI	GALVANIZED IRON
GL	GLASS
GLBV	GLOBE VALVE
GMU	GLYCOL MAKEUP UNIT
GPH	GALLONS PER HOUR
GPM	GALLONS PER MINUTE
GR	GRADE / GRAINS OF MOISTURE
GV	GATE VALVE
GW	GUY WIRE
GWB	GYPSUM WALL BOARD
GWF	GLAZED WALL FINISH
GYP	GYPSUM
H	HEIGHT
HB	HOSEBIB
HDW	HARDWARE
HEX	HEXAGONAL
HHWL	HIGH HIGH WATER LEVEL
HM	HOLLOW METAL
HMCP	HVAC MASTER CONTROL PANEL
HMI	HUMAN/MACHINE INTERFACE
HORZ	HORIZONTAL
HP	HORSEPOWER
HPT	HIGH POINT
HR	HOSE REEL / HOUR
HSS	HOLLOW STRUCTURAL SECTION
HTR	HEATER
HVAC	HEATING, VENTILATION AND AIR CONDITIONING
HW	HOT WATER
HWB	HOT WATER BOILER
HWL	HIGH WATER LEVEL
HWP	HOT WATER PUMP
HWR	HOT WATER RETURN
HWS	HOT WATER SUPPLY
HWY	HIGHWAY
HYD	HYDRAULIC
HZ	HERTZ
I	IRON
ID	INSIDE DIAMETER
IF	INSIDE FACE
IN	INCH
INCL	INCLUDED
INF	INFLUENT
INS	INSULATION
INT	INTERIOR
INV	INVERT
IW	INDIRECT WASTE
IWH	INSTANTANEOUS WATER HEATER
J	JOIST
JB	JUNCTION BOX
JCT	JUNCTION
JT	JOINT
KW	KILOWATT
KS	KITCHEN SINK
L	LENGTH/ ANGLE
LA	LINE AHEAD
LAM	LAMINATED
LAT	LEAVING AIR TEMPERATURE
LAV	LAVATORY
LB	POUND/ LINE BACK
LCP	LOCAL CONTROL PANEL
LCS	LOCAL CONTROL STATION
LF	LINEAR FEET
LG	LONG / LEVEL GAUGE
LL	LIVE LOAD
LLH	LONG LEG HORIZONTAL
LLV	LONG LEG VERTICAL
LLWL	LOW LOW WATER LEVEL
LP	LIGHT POLE
LPT	LOW POINT
LR	LONG RADIUS
LT	LIGHT
LTG	LIGHTING
LVR	LOUVER
LWL	LOW WATER LEVEL
LWT	LEAVING WATER TEMPERATURE
MAINT	MAINTENANCE
MATL	MATERIAL
MAX	MAXIMUM
MBH	1000 BTU PER HOUR
MCA	MINIMUM CIRCUIT AMPACITY
MCC	MOTOR CONTROL CENTER
MD	MOTORIZED DAMPER
MECH	MECHANICAL
MEMB	MEMBRANE
MET	METAL
MFR	MANUFACTURER
MG	MILLION GALLONS
MGD	MILLION GALLONS PER DAY
MH	MANHOLE
MIN	MINIMUM
MISC	MISCELLANEOUS
MJ	MECHANICAL JOINT
MLDG	MOLDING
MM	MILLIMETER
MO	MASONRY OPENING
MOCP	MAXIMUM OVER-CURRENT PROTECTION
MOD	MODIFY/ MODIFIED
MON	MONUMENT
MOT	MOTOR
MTD	MOUNTED
MTG	MOUNTING
MULT	MULTIPLE
N	NORTH
NA	NOT APPLICABLE
NC	NORMALLY CLOSED
NF	NEAR FACE
NFPA	NATIONAL FIRE PROTECTION ASSOCIATION
NH	NO-HUB CAST IRON SOIL PIPE
NIC	NOT IN CONTRACT
NO	NUMBER / NORMALLY OPEN
NOM	NOMINAL
NPHW	NON POTABLE HOT WATER
NPSH	NET POSITIVE SUCTION HEAD
NPW	NON POTABLE WATER
NPT	NATIONAL PIPE THREAD
NTS	NOT TO SCALE
OA	OUTDOOR AIR
OC	ON CENTER
OD	OUTSIDE DIAMETER
OF	OUTSIDE FACE
OFF	OFFICE
OPER	OPERATOR
OPNG	OPENING
OPP	OPPOSITE
ORIG	ORIGINAL
OT	OPEN TRUSS
OVHD	OVERHEAD
P	PROPANE
PAR	PARALLEL
PC	POINT OF CURVE/ PIECE
PCC	POINT OF COMPOUND CURVE
PCF	POUNDS PER CUBIC FOOT+
PD	PRESSURE DROP
PE	PLAIN END / POWER EXHAUSTER
PE LINING	POLYETHYLENE LINING
PERF	PERFORATED
PERP	PERPENDICULAR
PG	PRESSURE GAUGE
PH	HYDROGEN ION CONCENTRATION / PHASE
PI	POINT OF INTERSECTION / PRESSURE INDICATOR
PL	PROPERTY LINE/ PLATE
PLC	PROGRAMMABLE LOGIC CONTROLLER
PNL	PANEL
PP	POWER POLE
PREFAB	PREFABRICATED
PRV	PRESSURE RELIEF VALVE
PS	PUMPING STATION
PSF	POUNDS PER SQUARE FOOT
PSI	POUNDS PER SQUARE INCH
PSIG	POUNDS PER SQUARE INCH GAUGE
PSV	PRESSURE RELIEF VALVE
PT	POINT OF TANGENT/ POINT
PTN	PARTITION
PV	PLUG VALVE / PROPANE VAPORIZER
PVC	POLYVINYL CHLORIDE
PVMT	PAVEMENT
PW	POTABLE WATER
QTY	QUANTITY
R	RADIUS/ RISER
RA	RETURN AIR
RCP	REINFORCED CONCRETE PIPE / RECIRCULATING PUMP
RD	ROAD/ ROOF DRAIN
RECIR	RECIRCULATION
RECP	RECEPTACLE
RECT	RECTANGULAR
RED	REDUCER
REF	REFERENCE
REG	REGISTER
REINF	REINFORCING
REM	REMOVE
REQD	REQUIRED
REST	RESTRAINED
REV	REVISE
RF	ROOF
RFG	ROOFING
RJ	RESTRAINED JOINT
RM	ROOM
RND	ROUND
RO	ROUGH OPENING
RP	REDUCED PRESSURE ZONE BACKFLOW PREVENTER
RPM	REVOLUTIONS PER MINUTE
RR	RAILROAD
RT	RIGHT
RTU	REMOTE TERMINAL UNIT
RW	RAW WATER
R/W	RIGHT OF WAY
RWL	RAIN WATER LEADER
S	SOUTH
SA	SUPPLY AIR
SAN	SANITARY
SAS	SAMPLE SINK
SBL	SURVEY BASELINE
SCH	SCHEDULE
SCADA	SUPERVISORY CONTROL AND DATA ACQUISITION
SD	STORM / SITE DRAIN / SMOKE DETECTOR
SECT	SECTION
SERV	SERVICE
SEW	SEWER
SF	SQUARE FEET
SH	SHOWER
SHT	SHEET
SI	SQUARE INCH
SLG	SLIDE GATE
SIM	SIMILAR
SMACNA	SHEET METAL AND AIR CONDITIONING CONTRACTORS NATIONAL ASSOCIATION
SJ	STEEL JOIST
SPEC	SPECIFICATION
SQ	SQUARE
SR	SHORT RADIUS
SS	SANITARY SEWER / SERVICE SINK
SST	STAINLESS STEEL
ST	STREET / STORAGE TANK
STA	STATION
STD	STANDARD
STG	STORAGE
STIR	STIRRUP
STL	STEEL
STO	STORAGE
STRU	STRUCTURAL
SUB	SUBSTITUTE
SUP	SUPPLY
SUPT	SUPERINTENDENT
SUR	SURFACE
SUSP	SUSPENDED
SW	SWITCH
SWBD	SWITCHBOARD
SWD	SIDE WATER DEPTH
SYM	SYMMETRICAL
T	TREAD / THERMOSTAT
T&B	TOP AND BOTTOM
T&G	TONGUE AND GROOVE
TAN	TANGENT
TBM	TEMPORARY BENCH MARK
TC	TOP OF CURB
TD	TRENCH DRAIN
TDCV	TILTED DISC CHECK VALVE
TDH	TOTAL DYNAMIC HEAD
TFE	TETRAFLUOROETHYLENE
TECH	TECHNICAL
TEL	TELEPHONE
TEMP	TEMPERATURE
TER	TERRAZZO
THERMO	THERMOSTAT
THK	THICK
THRU	THROUGH
TMV	THERMOSTATIC MIXING VALVE
TOC	TOP OF CONCRETE
TOD	TOP OF DECK
TOF	TOP OF FOOTING
TOM	TOP OF MASONRY/ MANHOLE
TOS	TOP OF SLAB
TOW	TOP OF WALL
TOL	TOLERANCE
TPS	TWISTED PAIR SHIELDED
TRANS	TRANSFORMER
TS	TEMPERATURE SWITCH
TURB	TURBIDITY
TW	TEPID WATER
TWH	TEPID WATER HEATER
TYP	TYPICAL
UG	UNDERGROUND
UH	HOT WATER UNIT HEATER
UL	UNDERWRITERS LABORATORY
UNFIN	UNFINISHED
UNO	UNLESS NOTED OTHERWISE
UR	URINAL
UTIL	UTILITY
UV	ULTRAVIOLET
UV254	UV ABSORBANCE AT 254 NANOMETERS
V	SANITARY VENT
VAC	VACUUM
VAT	VINYL ASBESTOS TILE
VB	VACUUM BREAKER
VCP	VITRIFIED CLAY PIPE / VENDOR CONTROL PANEL
VD	VOLUME DAMPER
VEL	VELOCITY
VENT	VENTILATING/ VENTILATION
VERT	VERTICAL
VFD	VARIABLE FREQUENCY DRIVE
VOL	VOLUME
VP	VENT PIPE
VWC	VINYL WALL COVERING
W	WEST/ WIDTH
W/	WITH
WB	WET BULB
WC	WATER CLOSET / WATER COLUMN
WCO	WALL CLEANOUT
WD	WALL DIFFUSER
WE	WEIGHT ELEMENT
WF	WIDE FLANGE
WG	WATER GUAGE
WH	WATER HEATER
WHA	WATER HAMMER ARRESTER
WI	WROUGHT IRON
WIT	WEIGHT INDICATING TRANSMITTER
WJWW	WESTCHESTER JOINT WATER WORKS
WL	WATER LEVEL
W/L	WATER LINE
WM	WATER METER
WMS	WIRE MESH SCREEN
WO	WINDOW OPENING
W/O	WITHOUT
WP	WATERPROOF
WPFG	WATER PROOFING
WPT	WALL PENETRATING TYPE
WSE	WATER SURFACE ELEVATION
WSHH	WEIGHT SWITCH HIGH HIGH
WSP	WEATHERSTRIP
WT	WEIGHT
WV	WATER VALVE
WWF	WELDED WIRE FABRIC
XH	EXTRA HEAVY CAST IRON SOIL PIPE
YD	YARD
YR	YEAR

WARNING

IT IS A VIOLATION OF SECTION 7209.2 OF THE NEW YORK STATE EDUCATION LAW FOR ANY PERSON, UNLESS ACTING UNDER THE DIRECTION OF A LICENSED PROFESSIONAL ENGINEER, TO ALTER IN ANY WAY PLANS, SPECIFICATIONS, PLATS OR REPORTS TO WHICH THE SEAL OF A PROFESSIONAL ENGINEER HAS BEEN APPLIED. IF AN ITEM BEARING THE SEAL OF A PROFESSIONAL ENGINEER IS ALTERED, THE ALTERING ENGINEER SHALL AFFIX TO THE ITEM HIS SEAL AND THE NOTATION "ALTERED BY" FOLLOWED BY HIS SIGNATURE, THE DATE, AND A SPECIFIC DESCRIPTION OF THE ALTERATION.

GENERAL NOTES

1. PROVIDE BIRD/INSECT SCREENS FOR ALL VENTS.

LEGEND

SYMBOLS

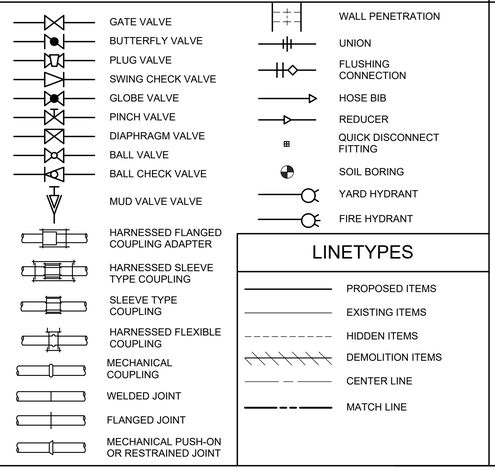

LINETYPES

MATERIALS

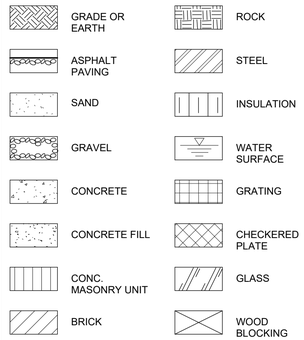

PROCESS PIPING

AL	COAGULANT
AS	AIR SCOUR
BWS	BACKWASH SUPPLY
CA	COMPRESSED AIR
CAP	COAGULANT AID POLYMER
CAS	SODIUM HYDROXIDE
CDR	CONVEYOR DRAIN
CDS	CARBON DIOXIDE SOLUTION
CEN	CENTRATE
CI	CORROSION INHIBITOR
CTF	CENTRIFUGE FEED
CW	CARRY WATER
DAFR	DAF RECYCLE
DAFS	DAF SPRAY
DAP	DEWATERING POLYMER
DR	DRAIN
DW	DILUTION WATER
FD	FLOOR DRAIN
FLW	FILTERED WATER
FLWT	FILTERED WATER TRANSFER
FS	FLOATED SOLIDS
FST	FLOATED SOLIDS TRANSFER
FTW	FILTER TO WASTE
HFS	HYDROFLUOSILICIC ACID
HWS	HOT WATER RETURN
HWR	HOT WATER SUPPLY
MR	MIXED RESIDUALS
MW	MIXED WATER
NP	NEAT POLYMER
OF	OVERFLOW
PDG	PROCESS DRAIN GRAVITY
PW	POTABLE WATER
RSD	RESIDUALS STORAGE DECANT
RW	RAW WATER
S	SAMPLE
SAN	SANITARY
SH	SODIUM HYPOCHLORITE
SLR	SLUDGE RETURN
SPD	SUMP PUMP DISCHARGE
V	VENT
WQ	WATER QUALITY
WWW	WASTE WASHWATER
WWWR	WASHWATER RECYCLE

INSTRUMENTATION DESIGNATIONS

AE	ANALYTICAL ELEMENT
AIT	ANALYTICAL INDICATING TRANSMITTER
FE	FLOW ELEMENT
FI	FIELD INDICATOR
FIT	FLOW INDICATING TRANSMITTER
FS	FLOW SWITCH
LDI	LEVEL DIFFERENTIAL INDICATOR
LE	LEVEL ELEMENT
LIT	LEVEL INDICATING TRANSMITTER
LSH	LEVEL SWITCH HIGH
LSHH	LEVEL SWITCH HIGH HIGH
LSL	LEVEL SWITCH LOW
LSLL	LEVEL SWITCH LOW LOW
MOG	MOTOR OPERATING GATE
MOV	MOTOR OPERATING VALVE
PIT	PRESSURE INDICATING TRANSMITTER

SECTION AND DETAIL KEYING

DRAWINGS ARE CROSS REFERENCED IN THE FOLLOWING METHOD:
(A) A SECTION CUT ON DRAWING A3 IS IDENTIFIED AS FOLLOWS:



SECTION LETTER

DRAWING WHERE SECTION IS SHOWN

(B) THE SECTION SHOWN ON DRAWINGS A6 IS IDENTIFIED AS FOLLOWS:



SECTION LETTER

DRAWING FROM WHERE SECTION WAS TAKEN

DETAILS ARE CROSS REFERENCED IN A SIMILAR MANNER, EXCEPT DETAILS ARE IDENTIFIED BY A SQUARE WITH A NUMBER IN THE UPPER HALF.

STANDARD DETAILS ARE REFERENCED BY A UNIQUE SEVEN DIGIT NUMBER AND ARE SHOWN ON THE CONTRACT DRAWINGS BY ONE OF TWO METHODS:

1509203 → REFERENCED ITEM

OR:

SEE 1509203 → REFERENCED ITEM

STANDARD DETAILS ARE COMPILED IN APPROXIMATE NUMERICAL ORDER IN THE BACK OF THE CONTRACT DRAWINGS ON THE D* DRAWINGS

DAF PIPE SUPPORT SCHEDULE

LEGEND	REF	DESCRIPTION	DETAIL
FIXED PIPE SUPPORT RESTRICTS MOVEMENT VERTICALLY AND LONGITUDINALLY TO THE PIPE ONLY	F-1	THRUST RESTRAINT	54/S-307
	F-2	BRACED HANGER	28/M-606
	F-3	REMOVABLE ELBOW SUPPORT	29/M-606
	F-4	HANGER FROM BEAM WITH BRACE IN BOTH DIRECTIONS	M-40-0306R/M-608
	F-5	BASE ELBOW	30/M-606
	F-6	THRUST RESTRAINT	52/S-307
GUIDED PIPE SUPPORT RESTRICTS MOVEMENT VERTICALLY AND LATERALLY TO THE PIPE ONLY	G-1	PIPE SUPPORT RACK	4/M-601
	G-2	PIPE WALL SUPPORT	M-40-0301/M-608
	G-3	PIPE SUPPORT BRACKET ATTACHED TO COLUMN	M-40-0303/M-608
	G-4	ADJUSTABLE SADDLE	M-40-0304/M-608
	G-5	BASE ELBOW	M-40-0300/M-608
	G-6	PIPE SUPPORT BRACKET ATTACHED TO WALL	M-40-0303/M-608
	G-7	FABRICATED PIPE SUPPORT AT PIPE	M-40-0303/M-608
HANGER ROD PIPE SUPPORT RESTRICTS MOVEMENT VERTICALLY ONLY	H-1	HANGER ATTACHED TO BEAM	30/M-606
	H-2	HANGER ATTACHED TO PRECAST PANEL	30/M-606
	H-3	BRACED PIPE HANGER ATTACHED TO TRAPEZE	M-40-0306R/M-608

REV	ISSUED FOR	DATE	BY

PROJECT ENGINEER: R. FROST
DESIGNED BY: C. THORNTON
DRAWN BY: B. CASULL
CHECKED BY: E. FELDMAN

IF THIS BAR DOES NOT MEASURE 1" THEN DRAWING IS NOT TO FULL SCALE 0 1/2" 1"

BID SET

STATE OF NEW YORK — Edward McCarthy Feldman — 085018 — LICENSED PROFESSIONAL ENGINEER

Hazen

HAZEN AND SAWYER
498 SEVENTH AVENUE, 11th FLOOR
NEW YORK, NEW YORK 10018

WESTCHESTER JOINT WATER WORKS
MAMARONECK, NY

RYE LAKE WATER FILTRATION PLANT
HARRISON, NY

MECHANICAL
GENERAL NOTES, SYMBOLS AND ABBREVIATIONS

DATE: FEB 2025
HAZEN NO.: 90388-000
CONTRACT NO.: A1364-A
DRAWING NUMBER: M-001

Autodesk Docs://90388-000_Rye_Lake_Filtration/90388-000-WFP-M.rvt
2/20/2025 1:04:25 AM

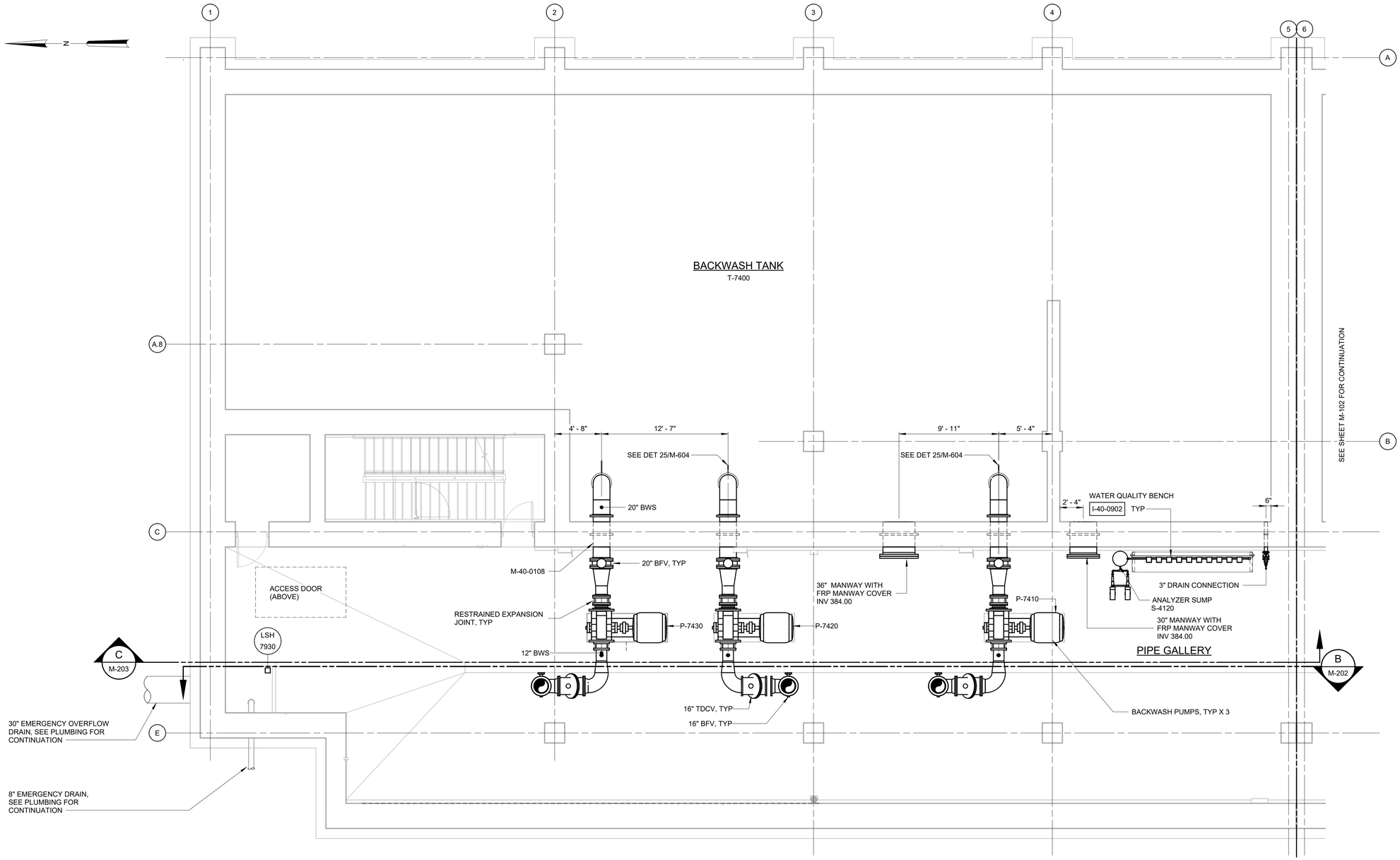

PARTIAL PLAN AT EL 383.00 - AREA 1

3/16" = 1'-0"

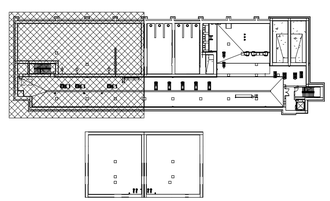

KEY PLAN

1/64" = 1'-0"

3/16" = 1'-0"

6 4 2 0 5'

WARNING
IT IS A VIOLATION OF SECTION 7209.2 OF THE NEW YORK STATE EDUCATION LAW FOR ANY PERSON, UNLESS ACTING UNDER THE DIRECTION OF A LICENSED PROFESSIONAL ENGINEER, TO ALTER IN ANY WAY PLANS, SPECIFICATIONS, PLATS OR REPORTS TO WHICH THE SEAL OF A PROFESSIONAL ENGINEER HAS BEEN APPLIED. IF AN ITEM BEARING THE SEAL OF A PROFESSIONAL ENGINEER IS ALTERED, THE ALTERING ENGINEER SHALL AFFIX TO THE ITEM HIS SEAL AND THE NOTATION "ALTERED BY" FOLLOWED BY HIS SIGNATURE, THE DATE, AND A SPECIFIC DESCRIPTION OF THE ALTERATION.

REV	ISSUED FOR	DATE	BY

PROJECT ENGINEER:	R. FROST
DESIGNED BY:	C. THORNTON
DRAWN BY:	B. CASULL
CHECKED BY:	E. FELDMAN

IF THIS BAR DOES NOT MEASURE 1" THEN DRAWING IS NOT TO FULL SCALE 0 1/2" 1"

BID SET

STATE OF NEW YORK · EDWARD J. McCARTHY · 085018 · LICENSED PROFESSIONAL ENGINEER

Hazen

HAZEN AND SAWYER
498 SEVENTH AVENUE, 11th FLOOR
NEW YORK, NEW YORK 10018

WESTCHESTER JOINT WATER WORKS
MAMARONECK, NY

RYE LAKE WATER FILTRATION PLANT
HARRISON, NY

FILTRATION PLANT
MECHANICAL
PARTIAL PLAN AT EL 383.00 - AREA 1

DATE:	FEB 2025
HAZEN NO.:	90388-000
CONTRACT NO.:	A1364-A
DRAWING NUMBER:	M-101

Autodesk Docs://90388-000_Rye_Lake_Filtration/90388-000-WFP-M.rvt
2/20/2025 1:04:28 AM

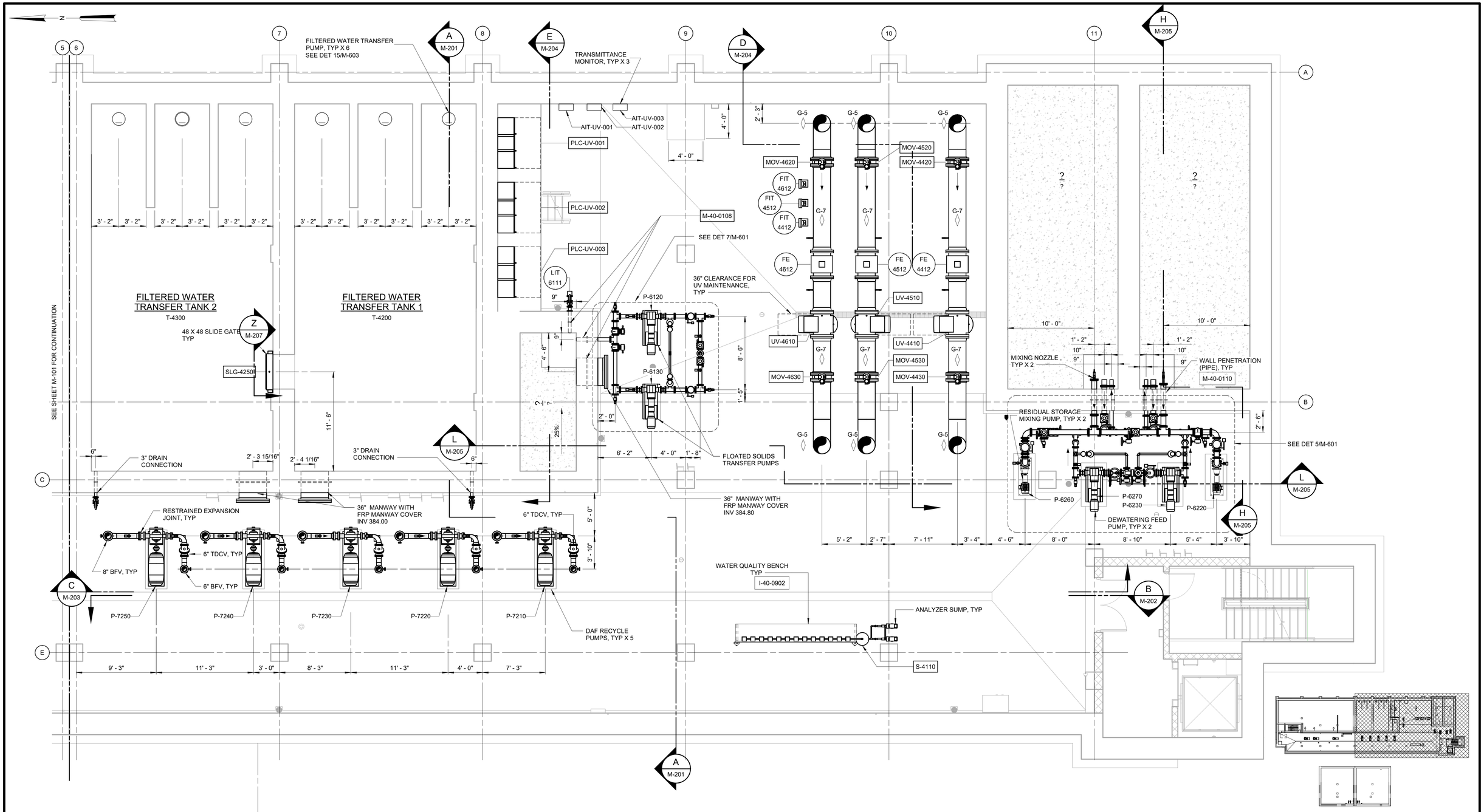

PARTIAL PLAN AT EL 383.00 - AREA 2 & 3

3/16" = 1'-0"

KEY PLAN

1/64" = 1'-0"

3/16" = 1'-0"

WARNING
IT IS A VIOLATION OF SECTION 7209.2 OF THE NEW YORK STATE EDUCATION LAW FOR ANY PERSON, UNLESS ACTING UNDER THE DIRECTION OF A LICENSED PROFESSIONAL ENGINEER, TO ALTER IN ANY WAY PLANS, SPECIFICATIONS, PLATS OR REPORTS TO WHICH THE SEAL OF A PROFESSIONAL ENGINEER HAS BEEN APPLIED. IF AN ITEM BEARING THE SEAL OF A PROFESSIONAL ENGINEER IS ALTERED, THE ALTERING ENGINEER SHALL AFFIX TO THE ITEM HIS SEAL AND THE NOTATION "ALTERED BY" FOLLOWED BY HIS SIGNATURE, THE DATE, AND A SPECIFIC DESCRIPTION OF THE ALTERATION.

REV	ISSUED FOR	DATE	BY

PROJECT ENGINEER:	R. FROST
DESIGNED BY:	C. THORNTON
DRAWN BY:	B. CASULL
CHECKED BY:	E. FELDMAN

IF THIS BAR DOES NOT MEASURE 1" THEN DRAWING IS NOT TO FULL SCALE (0, 1/2", 1")

BID SET

Hazen
HAZEN AND SAWYER
498 SEVENTH AVENUE, 11th FLOOR
NEW YORK, NEW YORK 10018

WESTCHESTER JOINT WATER WORKS
MAMARONECK, NY

RYE LAKE WATER FILTRATION PLANT
HARRISON, NY

FILTRATION PLANT
MECHANICAL
PARTIAL PLAN AT EL 383.00 - AREA 2 & 3

DATE:	FEB 2025
HAZEN NO.:	90388-000
CONTRACT NO.:	A1364-A
DRAWING NUMBER:	M-102

Autodesk Docs://90388-000_Rye_Lake_Filtration/90388-000-WFP-M.rvt
2/20/2025 1:04:32 AM

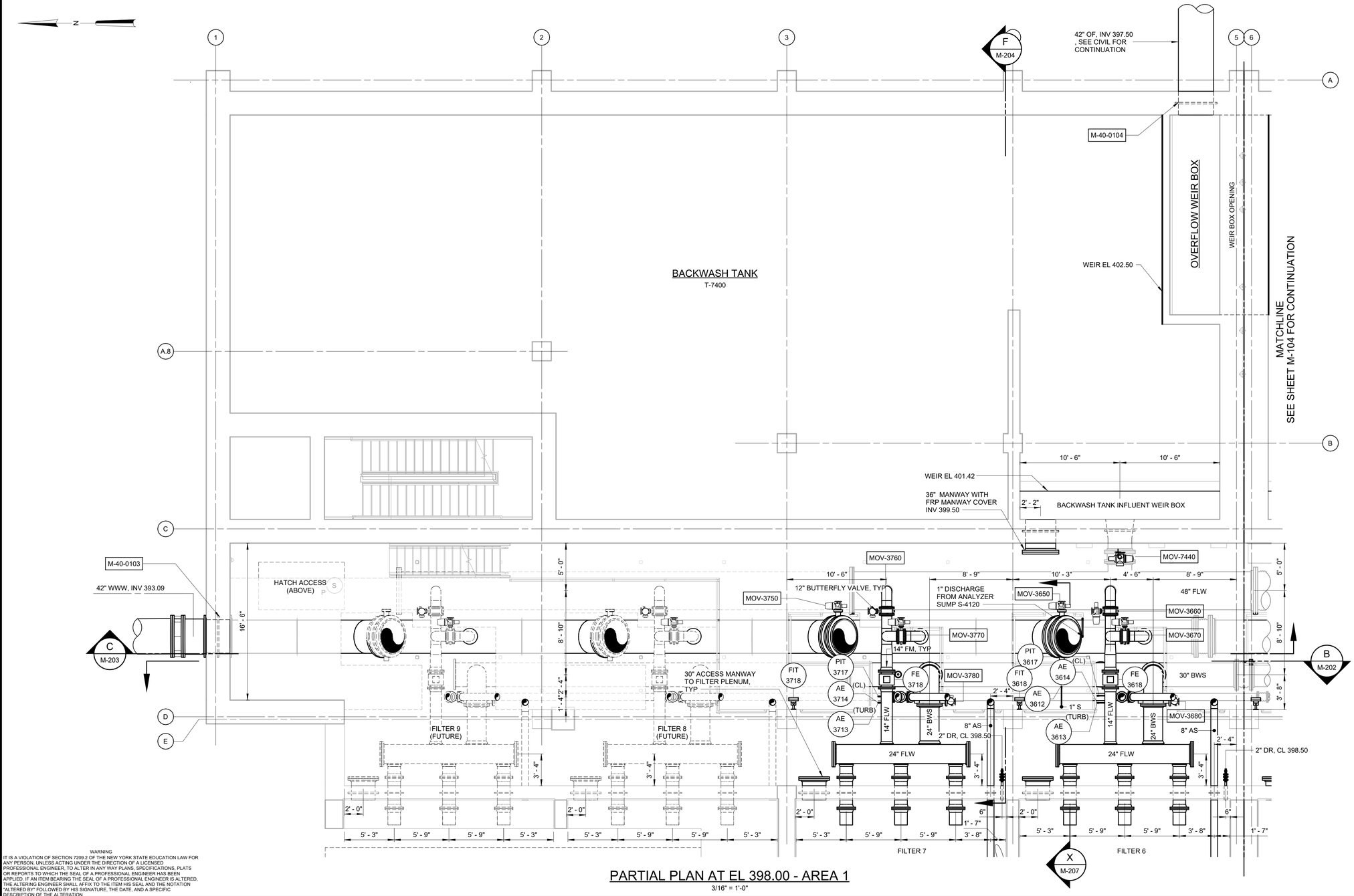

PARTIAL PLAN AT EL 398.00 - AREA 1

3/16" = 1'-0"

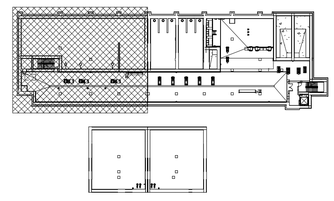

KEY PLAN

1/64" = 1'-0"

3/16" = 1'-0"

6 4 2 0 5'

WARNING
IT IS A VIOLATION OF SECTION 7209.2 OF THE NEW YORK STATE EDUCATION LAW FOR ANY PERSON, UNLESS ACTING UNDER THE DIRECTION OF A LICENSED PROFESSIONAL ENGINEER, TO ALTER IN ANY WAY PLANS, SPECIFICATIONS, PLATS OR REPORTS TO WHICH THE SEAL OF A PROFESSIONAL ENGINEER HAS BEEN APPLIED. IF AN ITEM BEARING THE SEAL OF A PROFESSIONAL ENGINEER IS ALTERED, THE ALTERING ENGINEER SHALL AFFIX TO THE ITEM HIS SEAL AND THE NOTATION "ALTERED BY" FOLLOWED BY HIS SIGNATURE, THE DATE, AND A SPECIFIC DESCRIPTION OF THE ALTERATION.

REV	ISSUED FOR	DATE	BY

PROJECT ENGINEER:	R. FROST
DESIGNED BY:	C. THORNTON
DRAWN BY:	B. CASULL
CHECKED BY:	E. FELDMAN
IF THIS BAR DOES NOT MEASURE 1" THEN DRAWING IS NOT TO FULL SCALE	0 1/2" 1"

BID SET

STATE OF NEW YORK · McCARTHY · 085018 · LICENSED PROFESSIONAL ENGINEER

Hazen

HAZEN AND SAWYER
498 SEVENTH AVENUE, 11th FLOOR
NEW YORK, NEW YORK 10018

WESTCHESTER JOINT WATER WORKS
MAMARONECK, NY

RYE LAKE WATER FILTRATION PLANT
HARRISON, NY

FILTRATION PLANT
MECHANICAL
PARTIAL PLAN AT EL 398.00 - AREA 1

DATE:	FEB 2025
HAZEN NO.:	90388-000
CONTRACT NO.:	A1364-A
DRAWING NUMBER:	M-103

Autodesk Docs://90388-000_Rye_Lake_Filtration/90388-000-WFP-M.rvt
2/20/2025 1:04:35 AM

42" OF, INV 397.00
SEE CIVIL FOR CONTINUATION

M-40-0104

MATCHLINE
SEE SHEET M-103 FOR CONTINUATION

WEIR BOX OPENING

WEIR EL 402.50
SEE DET 17/M-603

FILTERED WATER TRANSFER TANK 2
T-4300

FILTERED WATER TRANSFER TANK 1
T-4200

48" X 48" SLIDE GATE

36" MANWAY WITH FRP MANWAY COVER INV 399.50

WEIR EL 401.42
SEE DET 17/M-603

FILTERED WATER TRANSFER TANK 2 INFLUENT WEIR BOX

FILTERED WATER TRANSFER TANK 1 INFLUENT WEIR BOX

FLOATED SOLIDS BUFFER TANK T-6110

4" RSD, CL 401.81

M-40-0103

36" FLWT, CL 400.00

24" FLWT TO BLADDER SURGE TANK

36" FLWT FROM FILTERED WATER PUMPING AND DAF ROOM

UV

RESIDUALS STORAGE TANK 2
T-6250

RESIDUALS STORAGE TANK 1
T-6210

2" FST, CL 392.50

4" V, CL 404.25

16" DAFR, CL 390.50

4" FST, CL 402.87 (TO RESIDUALS STORAGE TANKS)

4" RSD, CL 403.66

4" AIR/ VACUUM VALVE

4" FST (TO RESIDUALS STORAGE TANKS)

3/4" HFS
3/4" SH
3/4" CAS
3/4" CI

1/2" PRV, TYP

TREATED WATER SAMPLE TAP LOCATION SEE DET 18/M-603

TO PROCESS ANALYSIS ROOM

4" CTF (TO CENTRIFUGES) PIPE ENCASEMENTS

S-03-0404

48" FLWT, CL 395.00, SEE CIVIL FOR CONTINUATION

4" CEN

6" CEN

M-40-0103 CONNECTION TO 8" SAN, SEE PLUMBING FOR CONTINUATION

4" CTF (FROM DEWATERING FEED PUMPS)

30" FLW, CL 395.33

30" BFV, TYP

30" FLW, CL 395.33

48" FLW, CL 395.33

12" BUTTERFLY VALVE, TYP

MOV-4340
MOV-4240
MOV-3450
MOV-3350
MOV-3250
MOV-3150
MOV-3550
MOV-3560
MOV-3460
MOV-3360
MOV-3260
MOV-3270
MOV-3160
MOV-3570
MOV-3470
MOV-3370
MOV-3170
MOV-3580
MOV-3480
MOV-3380
MOV-3280
MOV-3180

14" FM, TYP

30" BWS, CL 395.50
8" FS

1" DISCHARGE FROM ANALYZER SUMP S-4110

8" FS HIGH POINT

4" AIR / VACUUM VALVE

SEE DET 1/M-601

14" FLW
24" BWS
8" AS
24" FLW
16" FLW, TYP

FILTER 5
FILTER 4
FILTER 3
FILTER 2
FILTER 1

PARTIAL PLAN AT EL 398.00 - AREA 2&3

3/16" = 1'-0"

KEY PLAN

1/64" = 1'-0"

WARNING
IT IS A VIOLATION OF SECTION 7209.2 OF THE NEW YORK STATE EDUCATION LAW FOR ANY PERSON, UNLESS ACTING UNDER THE DIRECTION OF A LICENSED PROFESSIONAL ENGINEER, TO ALTER IN ANY WAY PLANS, SPECIFICATIONS, PLATS OR REPORTS TO WHICH THE SEAL OF A PROFESSIONAL ENGINEER HAS BEEN APPLIED. IF AN ITEM BEARING THE SEAL OF A PROFESSIONAL ENGINEER IS ALTERED, THE ALTERING ENGINEER SHALL AFFIX TO THE ITEM HIS SEAL AND THE NOTATION "ALTERED BY" FOLLOWED BY HIS SIGNATURE, THE DATE, AND A SPECIFIC DESCRIPTION OF THE ALTERATION.

REV	ISSUED FOR	DATE	BY

PROJECT ENGINEER: R. FROST
DESIGNED BY: C. THORNTON
DRAWN BY: B. CASULL
CHECKED BY: E. FELDMAN
IF THIS BAR DOES NOT MEASURE 1" THEN DRAWING IS NOT TO FULL SCALE 0 1/2" 1"

BID SET

STATE OF NEW YORK · EILEEN MCCARTHY FELDMAN · 085018 · LICENSED PROFESSIONAL ENGINEER

Hazen
HAZEN AND SAWYER
498 SEVENTH AVENUE, 11th FLOOR
NEW YORK, NEW YORK 10018

WESTCHESTER JOINT WATER WORKS
MAMARONECK, NY

RYE LAKE WATER FILTRATION PLANT
HARRISON, NY

FILTRATION PLANT
MECHANICAL
PARTIAL PLAN AT EL 398.00 - AREA 2 & 3

DATE: FEB 2025
HAZEN NO.: 90388-000
CONTRACT NO.: A1364-A
DRAWING NUMBER: M-104

Autodesk Docs://90388-000_Rye_Lake_Filtration/90388-000-WFP-M.rvt
2/20/2025 1:04:39 AM

NOTES:

1. TANK INSTRUMENTS, VENT PIPING AND CHEMICAL FEED PIPING IN CHEMICAL ROOMS ARE SHOWN ON SHEET M-110 FOR CLARITY.

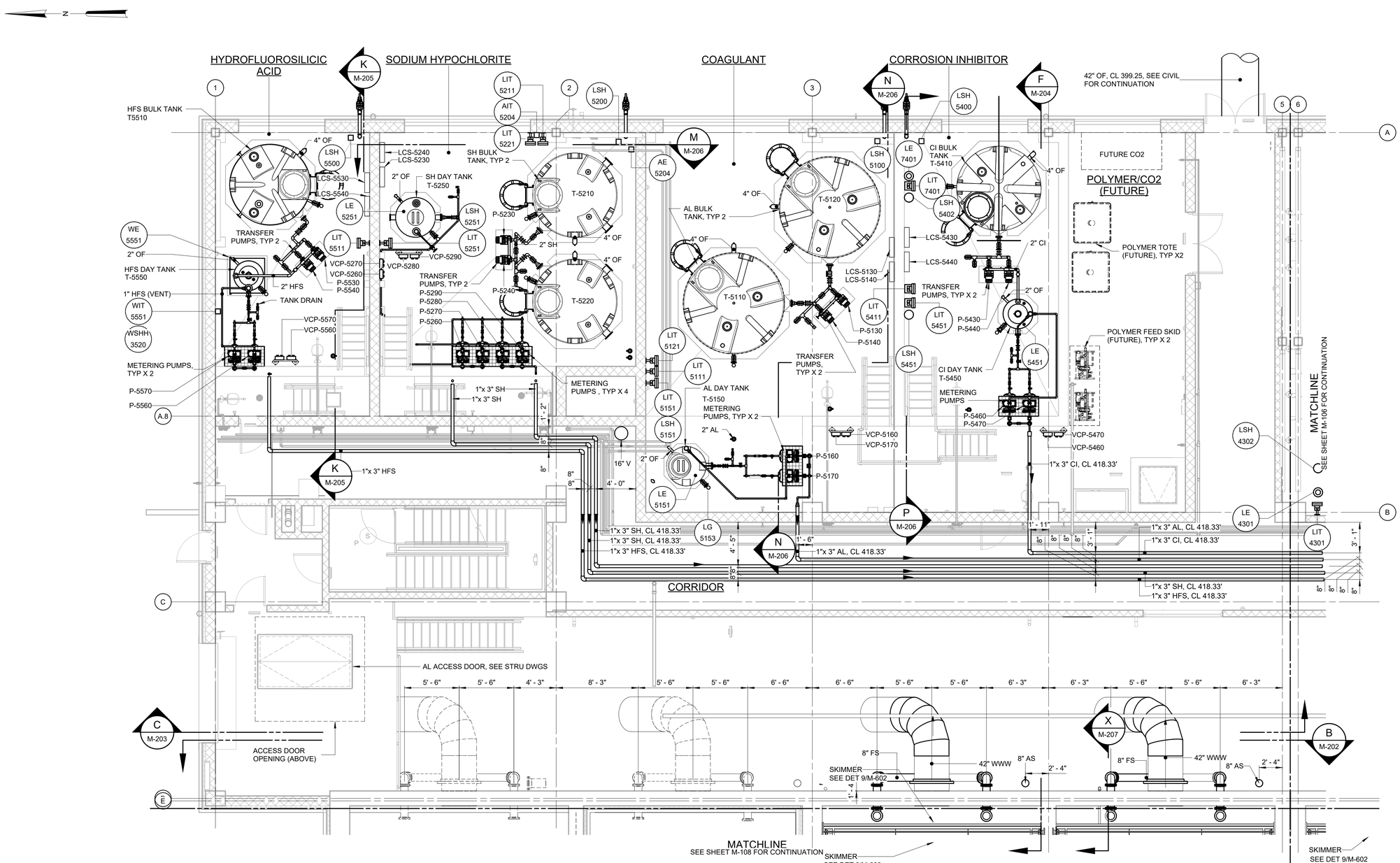

PARTIAL PLAN AT EL 407.00 - AREA 1

3/16" = 1'-0"

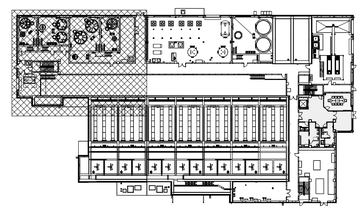

KEY PLAN

1/64" = 1'-0"

3/16" = 1'-0"

WARNING

IT IS A VIOLATION OF SECTION 7209.2 OF THE NEW YORK STATE EDUCATION LAW FOR ANY PERSON, UNLESS ACTING UNDER THE DIRECTION OF A LICENSED PROFESSIONAL ENGINEER, TO ALTER IN ANY WAY PLANS, SPECIFICATIONS, PLATS OR REPORTS TO WHICH THE SEAL OF A PROFESSIONAL ENGINEER HAS BEEN APPLIED. IF AN ITEM BEARING THE SEAL OF A PROFESSIONAL ENGINEER IS ALTERED, THE ALTERING ENGINEER SHALL AFFIX TO THE ITEM HIS SEAL AND THE NOTATION "ALTERED BY" FOLLOWED BY HIS SIGNATURE, THE DATE, AND A SPECIFIC DESCRIPTION OF THE ALTERATION.

REV	ISSUED FOR	DATE	BY

PROJECT ENGINEER:	R. FROST
DESIGNED BY:	C. THORNTON
DRAWN BY:	B. CASULL
CHECKED BY:	E. FELDMAN

IF THIS BAR DOES NOT MEASURE 1" THEN DRAWING IS NOT TO FULL SCALE 0 1/2" 1"

BID SET

STATE OF NEW YORK · ELLEN M. McCARTHY FELDMAN · 085018 · LICENSED PROFESSIONAL ENGINEER

Hazen

HAZEN AND SAWYER
498 SEVENTH AVENUE, 11th FLOOR
NEW YORK, NEW YORK 10018

WESTCHESTER JOINT WATER WORKS
MAMARONECK, NY

RYE LAKE WATER FILTRATION PLANT
HARRISON, NY

FILTRATION PLANT
MECHANICAL
PARTIAL PLAN AT EL 407.00 - AREA 1

DATE:	FEB 2025
HAZEN NO.:	90388-000
CONTRACT NO.:	A1364-A
DRAWING NUMBER:	M-105

Autodesk Docs://90388-000_Rye_Lake_Filtration/90388-000-WFP-M.rvt
2/20/2025 1:04:49 AM

NOTES:

1. TANK INSTRUMENTS, VENT PIPING AND CHEMICAL FEED PIPING IN CHEMICAL ROOMS ARE SHOWN ON SHEET M-111 FOR CLARITY.

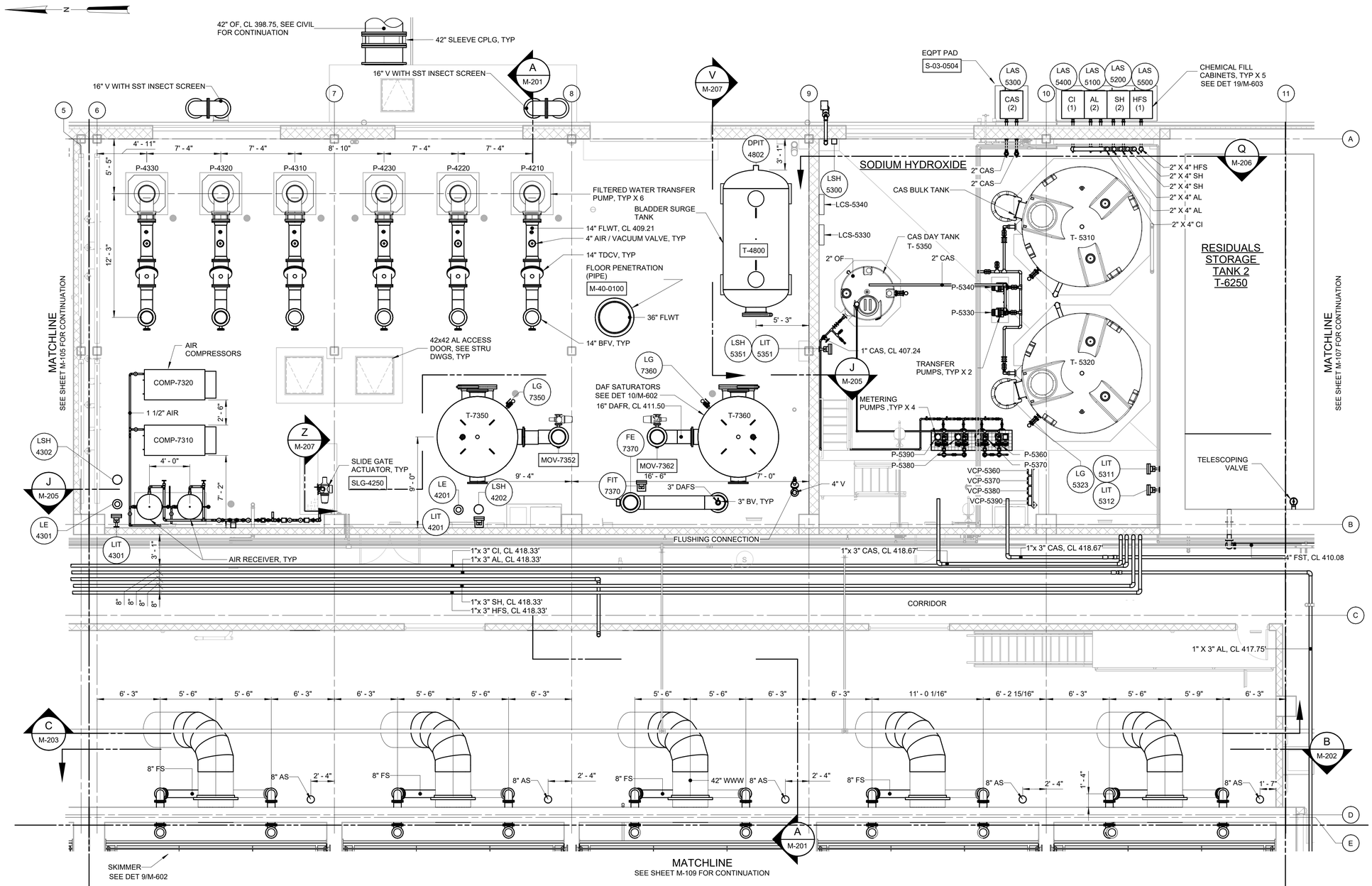

PARTIAL PLAN AT EL 407.00 - AREA 2

3/16" = 1'-0"

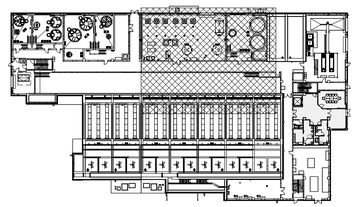

KEY PLAN

1/64" = 1'-0"

3/16" = 1'-0"

WARNING
IT IS A VIOLATION OF SECTION 7209.2 OF THE NEW YORK STATE EDUCATION LAW FOR ANY PERSON, UNLESS ACTING UNDER THE DIRECTION OF A LICENSED PROFESSIONAL ENGINEER, TO ALTER IN ANY WAY PLANS, SPECIFICATIONS, PLATS OR REPORTS TO WHICH THE SEAL OF A PROFESSIONAL ENGINEER HAS BEEN APPLIED. IF AN ITEM BEARING THE SEAL OF A PROFESSIONAL ENGINEER IS ALTERED, THE ALTERING ENGINEER SHALL AFFIX TO THE ITEM HIS SEAL AND THE NOTATION "ALTERED BY" FOLLOWED BY HIS SIGNATURE, THE DATE, AND A SPECIFIC DESCRIPTION OF THE ALTERATION.

REV	ISSUED FOR	DATE	BY

PROJECT ENGINEER:	R. FROST
DESIGNED BY:	C. THORNTON
DRAWN BY:	B. CASULL
CHECKED BY:	E. FELDMAN

IF THIS BAR DOES NOT MEASURE 1" THEN DRAWING IS NOT TO FULL SCALE (0, 1/2", 1")

BID SET

STATE OF NEW YORK · EDWARD J. McCARTHY · 085015 · LICENSED PROFESSIONAL ENGINEER

Hazen

HAZEN AND SAWYER
498 SEVENTH AVENUE, 11th FLOOR
NEW YORK, NEW YORK 10018

WESTCHESTER JOINT WATER WORKS
MAMARONECK, NY

RYE LAKE WATER FILTRATION PLANT
HARRISON, NY

FILTRATION PLANT
MECHANICAL
PARTIAL PLAN AT EL 407.00 - AREA 2

DATE:	FEB 2025
HAZEN NO.:	90388-000
CONTRACT NO.:	A1364-A
DRAWING NUMBER:	M-106

Autodesk Docs://90388-000_Rye_Lake_Filtration/90388-000-WFP-M.rvt
2/20/2025 1:04:59 AM

NOTE:

1. PLATFORM, CENTRIFUGES, AND CENTRIFUGE LCPS TO BE COORDINATED WITH MANUFACTURERS.
2. CONVEYOR SUPPORTS ARE TO BE DESIGNED BY THE CONVEYOR MANUFACTURER, AS PER SPECIFICATION 46 76 42, AND COORDINATED WITH THE CONTRACTOR AS TO NOT IMPEDE OR BLOCK ACCESS FROM THE ROLL-UP DOORS.
3. CONTRACTOR SHALL COORDINATE WITH MANUFACTURER FOR MATERIALS, ROUTING, AND SUPPORT OF HYDRAULIC TUBING.

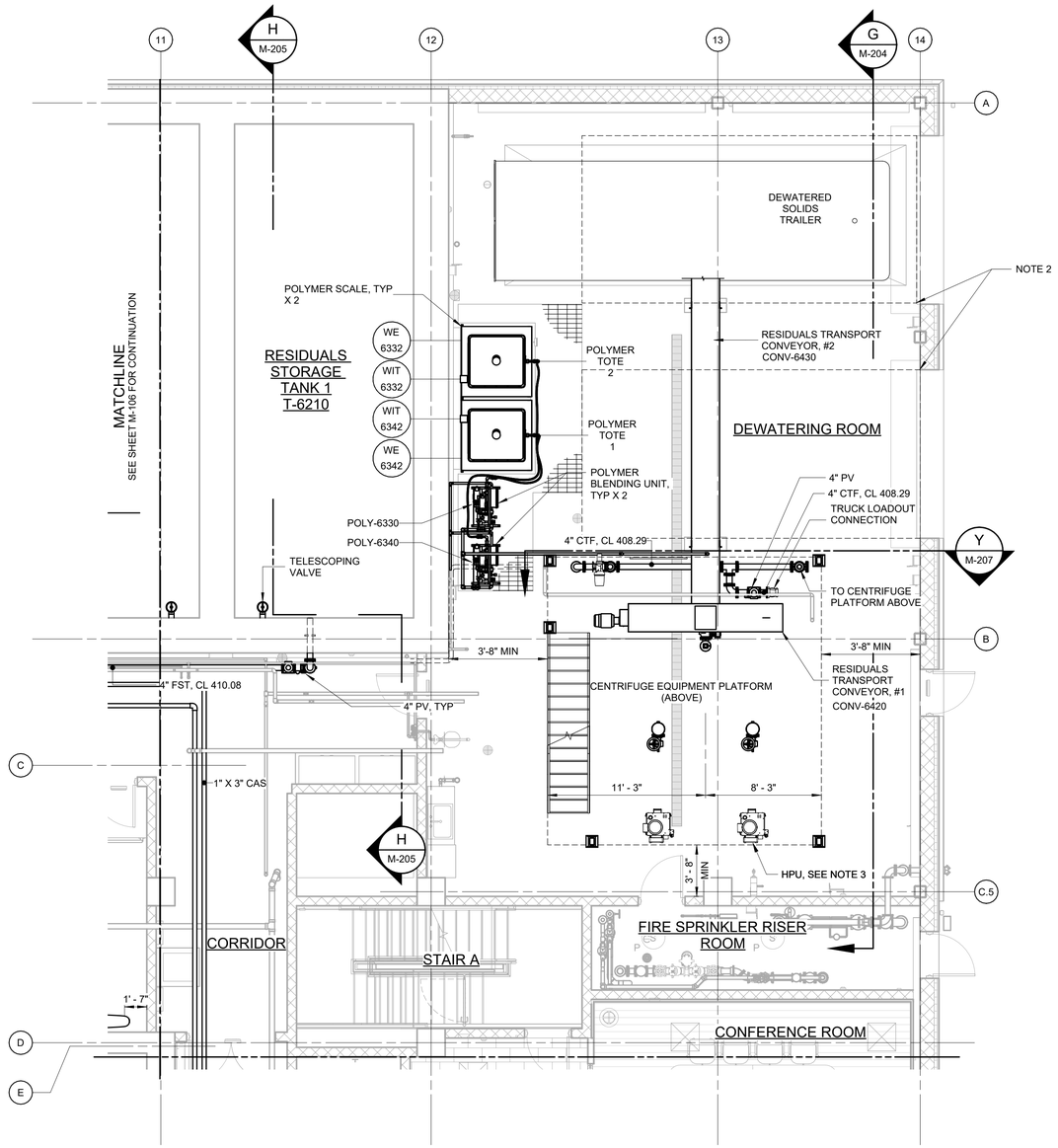

PARTIAL PLAN AT EL 407.00 - AREA 3

3/16" = 1'-0"

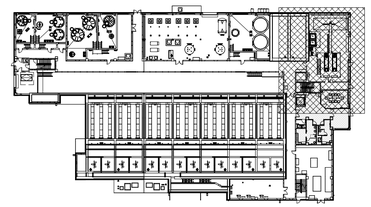

KEY PLAN

1/64" = 1'-0"

3/16" = 1'-0" 6 4 2 0 5'

WARNING
IT IS A VIOLATION OF SECTION 7209.2 OF THE NEW YORK STATE EDUCATION LAW FOR ANY PERSON, UNLESS ACTING UNDER THE DIRECTION OF A LICENSED PROFESSIONAL ENGINEER, TO ALTER IN ANY WAY PLANS, SPECIFICATIONS, PLATS OR REPORTS TO WHICH THE SEAL OF A PROFESSIONAL ENGINEER HAS BEEN APPLIED. IF AN ITEM BEARING THE SEAL OF A PROFESSIONAL ENGINEER IS ALTERED, THE ALTERING ENGINEER SHALL AFFIX TO THE ITEM HIS SEAL AND THE NOTATION "ALTERED BY" FOLLOWED BY HIS SIGNATURE, THE DATE, AND A SPECIFIC DESCRIPTION OF THE ALTERATION.

REV	ISSUED FOR	DATE	BY

PROJECT ENGINEER:	R. FROST
DESIGNED BY:	C. THORNTON
DRAWN BY:	B. CASULL
CHECKED BY:	E. FELDMAN

IF THIS BAR DOES NOT MEASURE 1" THEN DRAWING IS NOT TO FULL SCALE 0 1/2" 1"

BID SET

STATE OF NEW YORK · EDWARD J. McCARTHY FELDMAN · 085018 · LICENSED PROFESSIONAL ENGINEER

Hazen

HAZEN AND SAWYER
498 SEVENTH AVENUE, 11th FLOOR
NEW YORK, NEW YORK 10018

WESTCHESTER JOINT WATER WORKS
MAMARONECK, NY

RYE LAKE WATER FILTRATION PLANT
HARRISON, NY

FILTRATION PLANT
MECHANICAL
PARTIAL PLAN AT EL 407.00 - AREA 3

DATE:	FEB 2025
HAZEN NO.:	90388-000
CONTRACT NO.:	A1364-A
DRAWING NUMBER:	M-107

Autodesk Docs://90388-000_Rye_Lake_Filtration/90388-000-WFP-M.rvt
2/20/2025 1:05:07 AM

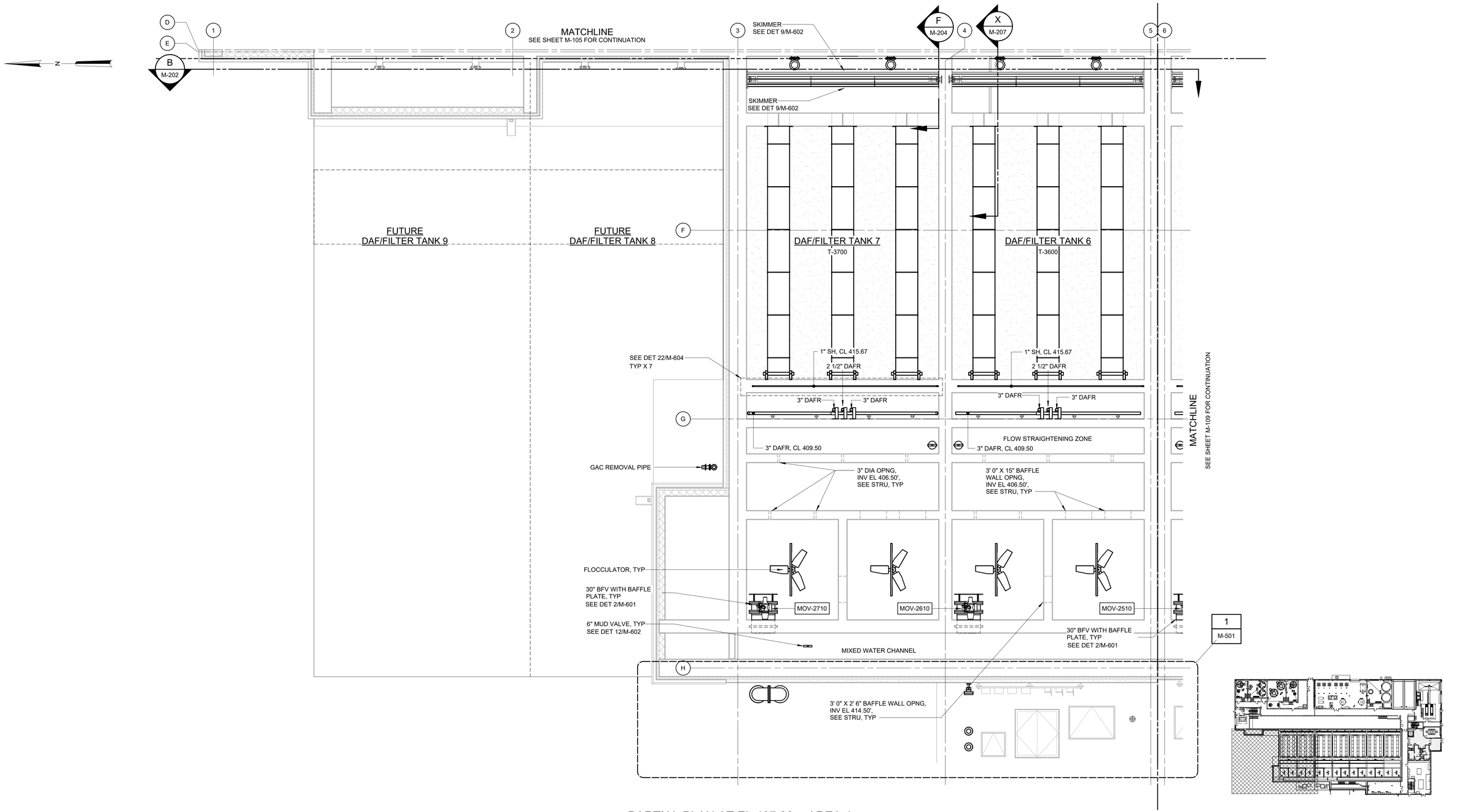

PARTIAL PLAN AT EL 407.00 - AREA 4

3/16" = 1'-0"

KEY PLAN

1/64" = 1'-0"

3/16" = 1'-0"

6 4 2 0 5'

WARNING
IT IS A VIOLATION OF SECTION 7209.2 OF THE NEW YORK STATE EDUCATION LAW FOR ANY PERSON, UNLESS ACTING UNDER THE DIRECTION OF A LICENSED PROFESSIONAL ENGINEER, TO ALTER IN ANY WAY PLANS, SPECIFICATIONS, PLATS OR REPORTS TO WHICH THE SEAL OF A PROFESSIONAL ENGINEER HAS BEEN APPLIED. IF AN ITEM BEARING THE SEAL OF A PROFESSIONAL ENGINEER IS ALTERED, THE ALTERING ENGINEER SHALL AFFIX TO THE ITEM HIS SEAL AND THE NOTATION "ALTERED BY" FOLLOWED BY HIS SIGNATURE, THE DATE, AND A SPECIFIC DESCRIPTION OF THE ALTERATION.

REV	ISSUED FOR	DATE	BY

PROJECT ENGINEER:	R. FROST
DESIGNED BY:	C. THORNTON
DRAWN BY:	B. CASULL
CHECKED BY:	E. FELDMAN

IF THIS BAR DOES NOT MEASURE 1" THEN DRAWING IS NOT TO FULL SCALE 0 1/2" 1"

BID SET

STATE OF NEW YORK · E. F. McCARTHY · 085018 · LICENSED PROFESSIONAL ENGINEER

Hazen

HAZEN AND SAWYER
498 SEVENTH AVENUE, 11th FLOOR
NEW YORK, NEW YORK 10018

WESTCHESTER JOINT WATER WORKS
MAMARONECK, NY

RYE LAKE WATER FILTRATION PLANT
HARRISON, NY

FILTRATION PLANT
MECHANICAL
PARTIAL PLAN AT EL 407.00 - AREA 4

DATE:	FEB 2025
HAZEN NO.:	90388-000
CONTRACT NO.:	A1364-A
DRAWING NUMBER:	M-108

Autodesk Docs://90388-000_Rye_Lake_Filtration/90388-000-WFP-M.rvt
2/20/2025 1:05:13 AM

NOTE:

1. 1" MIXED WATER INLET SAMPLE LINE (LOCATION AND CL TO BE DETERMINED BY STATIC MIXER MANUFACTURER)

MATCHLINE
SEE SHEET M-106 FOR CONTINUATION

A
M-201

MATCHLINE
SEE SHEET M-108 FOR CONTINUATION

SKIMMER
SEE DET 9/M-602

FILTER TROUGH, TYP

DAF/FILTER TANK 5
T-3500

DAF/FILTER TANK 4
T-3400

DAF/FILTER TANK 3
T-3300

DAF/FILTER TANK 2
T-3200

DAF/FILTER TANK 1
T-3100

2 1/2" DAFR

1" SH, CL 415.67

3" DAFR

3" DAFR, CL 409.50

DAF INJECTION ZONE, TYP

FLOCCULATOR, TYP

3' 0" X 15" BAFFLE WALL OPNG, INV EL 406.50', SEE STRU, TYP

3" DIA OPNG, INV EL 406.50', SEE STRU, TYP

FLOW STRAIGHTENING ZONE

6" MUD VALVE, TYP
SEE DET 12/M-602

MOV-2510

MOV-2410

MOV-2310

MOV-2210

MOV-2110

STOP LOGS

30" BFV WITH BAFFLE PLATE, TYP
SEE DET 2/M-601

1" SAMPLE PIPE TO MIXED WATER SAMPLING PUMP SEE NOTE 1

POLYMER INJECTORS (FUTURE), TYP X 2

COAGULANT INJECTORS, TYP X 2

MIXED WATER CHANNEL

42" INLET PIPE WITH BAFFLE PLATE
SEE DET 21/M-604

3" AL, CL 417.75

3" CAS, CL 417.75

14" RW, CL 415.31

3" CAS, CL 417.75

MOV-1903

30" DISMANTLING JOINT

STATIC MIXER CHANNEL

9' - 9"

6' - 7"

STATIC MIXER, TYP X 2

2' - 6"

OVERFLOW CHANNEL

CO2 INJECTORS, (FUTURE), TYP X 2

SODIUM HYDROXIDE INJECTORS, TYP X 2

14' - 10"

16' - 4"

1" S

MOV-1902

FE 1711

30" RW, CL 410.83

FIT 1711

MOV-1901

1" SAMPLE PIPE TO RAW WATER SAMPLING PUMP

12" WWWR, CL 415.50

1" S, CL 412.00

1" S, CL 411.75

1" S, CL 411.50

SEE DET 6/M-601

(3) 1" SAMPLE PIPES TO PROCESS ANALYSIS ROOM

1" SAMPLE PIPE TO COMBINED RAW WATER SAMPLING PUMP

CARRY WATER PUMP TYP X 2

MIXED WATER SAMPLE PUMP, TYP X 2

COMBINED RAW WATER SAMPLE PUMP, TYP X 2

RAW WATER SAMPLE PUMP, TYP X 2

S
M-206

R
M-206

A
M-201

T
M-207

1
M-501

PARTIAL PLAN AT EL 407.00 - AREA 5
3/16" = 1'-0"

KEY PLAN
1/64" = 1'-0"

3/16" = 1'-0"

WARNING
IT IS A VIOLATION OF SECTION 7209.2 OF THE NEW YORK STATE EDUCATION LAW FOR ANY PERSON, UNLESS ACTING UNDER THE DIRECTION OF A LICENSED PROFESSIONAL ENGINEER, TO ALTER IN ANY WAY PLANS, SPECIFICATIONS, PLATS OR REPORTS TO WHICH THE SEAL OF A PROFESSIONAL ENGINEER HAS BEEN APPLIED. IF AN ITEM BEARING THE SEAL OF A PROFESSIONAL ENGINEER IS ALTERED, THE ALTERING ENGINEER SHALL AFFIX TO THE ITEM HIS SEAL AND THE NOTATION "ALTERED BY" FOLLOWED BY HIS SIGNATURE, THE DATE, AND A SPECIFIC DESCRIPTION OF THE ALTERATION.

REV	ISSUED FOR	DATE	BY

PROJECT ENGINEER: R. FROST
DESIGNED BY: C. THORNTON
DRAWN BY: B. CASULL
CHECKED BY: E. FELDMAN
IF THIS BAR DOES NOT MEASURE 1" THEN DRAWING IS NOT TO FULL SCALE 0 1/2" 1"

BID SET

STATE OF NEW YORK · EILEEN McCARTHY FELDMAN · 085018 · LICENSED PROFESSIONAL ENGINEER

Hazen

HAZEN AND SAWYER
498 SEVENTH AVENUE, 11th FLOOR
NEW YORK, NEW YORK 10018

WESTCHESTER JOINT WATER WORKS
MAMARONECK, NY

RYE LAKE WATER FILTRATION PLANT
HARRISON, NY

FILTRATION PLANT
MECHANICAL
PARTIAL PLAN AT EL 407.00 - AREA 5

DATE: FEB 2025
HAZEN NO.: 90388-000
CONTRACT NO.: A1364-A
DRAWING NUMBER: M-109

Autodesk Docs://90388-000_Rye_Lake_Filtration/90388-000-WFP-M.rvt
2/20/2025 1:05:23 AM

NOTES:

1. PROVIDE BIRD/INSECT SCREENS FOR ALL VENTS.
2. LOWER CHEMICAL PIPING, INSTRUMENTS AND EQUIPMENT ARE SHOWN ON SHEET M-105 FOR CLARITY.
3. CHEMICAL FILL STATIONS AND TANKS SHALL BE LABELED AS PER SPECIFICATION 43 41 43 AND 10 14 00.
4. LIQUID CHEMICAL STORAGE TANKS SHALL BE VENTED PER SPECIFICATION 43 41 43. TANKS SHALL BE VENTED SEPARATE FROM OTHER CHEMICALS, AND NOT COMMON BETWEEN BULK AND DAY TANKS OF THE SAME CHEMICAL.
5. SECONDARY CONTAINMENT VOLUME FOR EACH CHEMICAL ROOM PROVIDED BY CONCRETE CURBED AREA, AS SHOWN IN S-106 AND S-108.
6. CHEMICAL ROOMS SHALL CONTAIN A NON-DRAINING SUMP AND FLOOR DRAINED TO IT, AS SHOWN ON S-108 AND S-109.
7. SURFACE COATINGS IN CHEMICAL ROOM ARE PROVIDED IN THE ROOM FINISH SCHEDULE, AS SHOWN ON A-604 AND DETAILED PER SPECIFICATION 09 97 00.

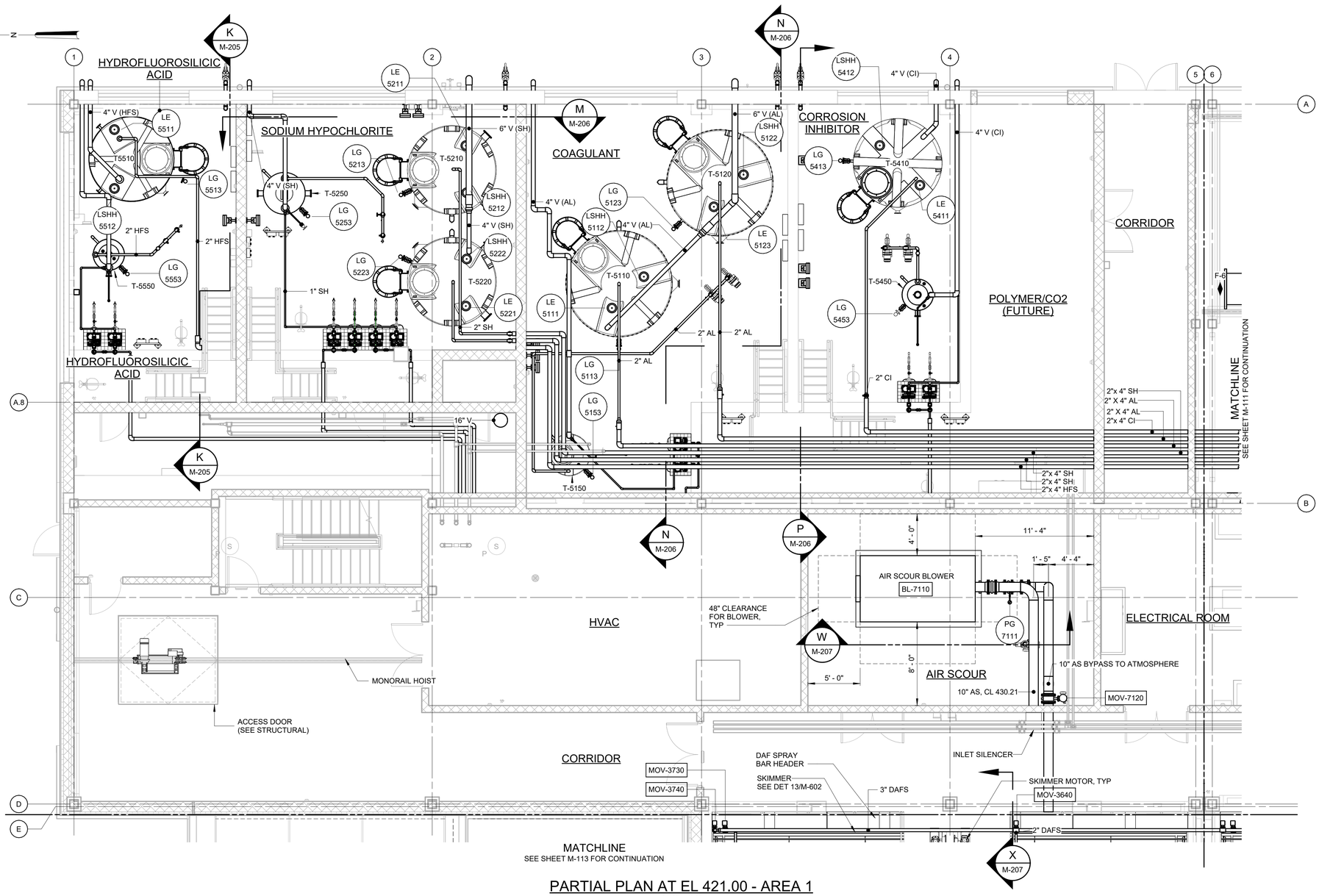

PARTIAL PLAN AT EL 421.00 - AREA 1

3/16" = 1'-0"

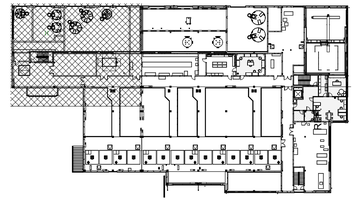

KEY PLAN

1/64" = 1'-0"

3/16" = 1'-0"

WARNING
IT IS A VIOLATION OF SECTION 7209.2 OF THE NEW YORK STATE EDUCATION LAW FOR ANY PERSON, UNLESS ACTING UNDER THE DIRECTION OF A LICENSED PROFESSIONAL ENGINEER, TO ALTER IN ANY WAY PLANS, SPECIFICATIONS, PLATS OR REPORTS TO WHICH THE SEAL OF A PROFESSIONAL ENGINEER HAS BEEN APPLIED. IF AN ITEM BEARING THE SEAL OF A PROFESSIONAL ENGINEER IS ALTERED, THE ALTERING ENGINEER SHALL AFFIX TO THE ITEM HIS SEAL AND THE NOTATION "ALTERED BY" FOLLOWED BY HIS SIGNATURE, THE DATE, AND A SPECIFIC DESCRIPTION OF THE ALTERATION.

REV	ISSUED FOR	DATE	BY

PROJECT ENGINEER:	R. FROST
DESIGNED BY:	C. THORNTON
DRAWN BY:	B. CASULL
CHECKED BY:	E. FELDMAN

IF THIS BAR DOES NOT MEASURE 1" THEN DRAWING IS NOT TO FULL SCALE (0, 1/2", 1")

BID SET

STATE OF NEW YORK · EDWARD F. McCARTHY · 085018 · LICENSED PROFESSIONAL ENGINEER

Hazen

HAZEN AND SAWYER
498 SEVENTH AVENUE, 11th FLOOR
NEW YORK, NEW YORK 10018

WESTCHESTER JOINT WATER WORKS
MAMARONECK, NY

RYE LAKE WATER FILTRATION PLANT
HARRISON, NY

FILTRATION PLANT
MECHANICAL
PARTIAL PLAN AT EL 421.00 - AREA 1

DATE:	FEB 2025
HAZEN NO.:	90388-000
CONTRACT NO.:	A1364-A
DRAWING NUMBER:	M-110

Autodesk Docs://90388-000_Rye_Lake_Filtration/90388-000-WFP-M.rvt
2/20/2025 1:05:32 AM

NOTES:

1. PROVIDE BIRD/INSECT SCREENS FOR ALL VENTS.
2. LOWER CHEMICAL PIPING, INSTRUMENTS AND EQUIPMENT ARE SHOWN ON SHEET M-105 FOR CLARITY.
3. CHEMICAL FILL STATIONS AND TANKS SHALL BE LABELED AS PER SPECIFICATION 43 41 43 AND 10 14 00.
4. LIQUID CHEMICAL STORAGE TANKS SHALL BE VENTED PER SPECIFICATION 43 41 43. TANKS SHALL BE VENTED SEPARATE FROM OTHER CHEMICALS, AND NOT COMMON BETWEEN BULK AND DAY TANKS OF THE SAME CHEMICAL.
5. SECONDARY CONTAINMENT VOLUME FOR EACH CHEMICAL ROOM PROVIDED BY CONCRETE CURBED AREA, AS SHOWN IN S-106 AND S-108.
6. CHEMICAL ROOMS SHALL CONTAIN A NON-DRAINING SUMP AND FLOOR DRAINED TO IT, AS SHOWN ON S-108 AND S-109.
7. SURFACE COATINGS IN CHEMICAL ROOM ARE PROVIDED IN THE ROOM FINISH SCHEDULE, AS SHOWN ON A-604 AND DETAILED PER SPECIFICATION 09 97 00.

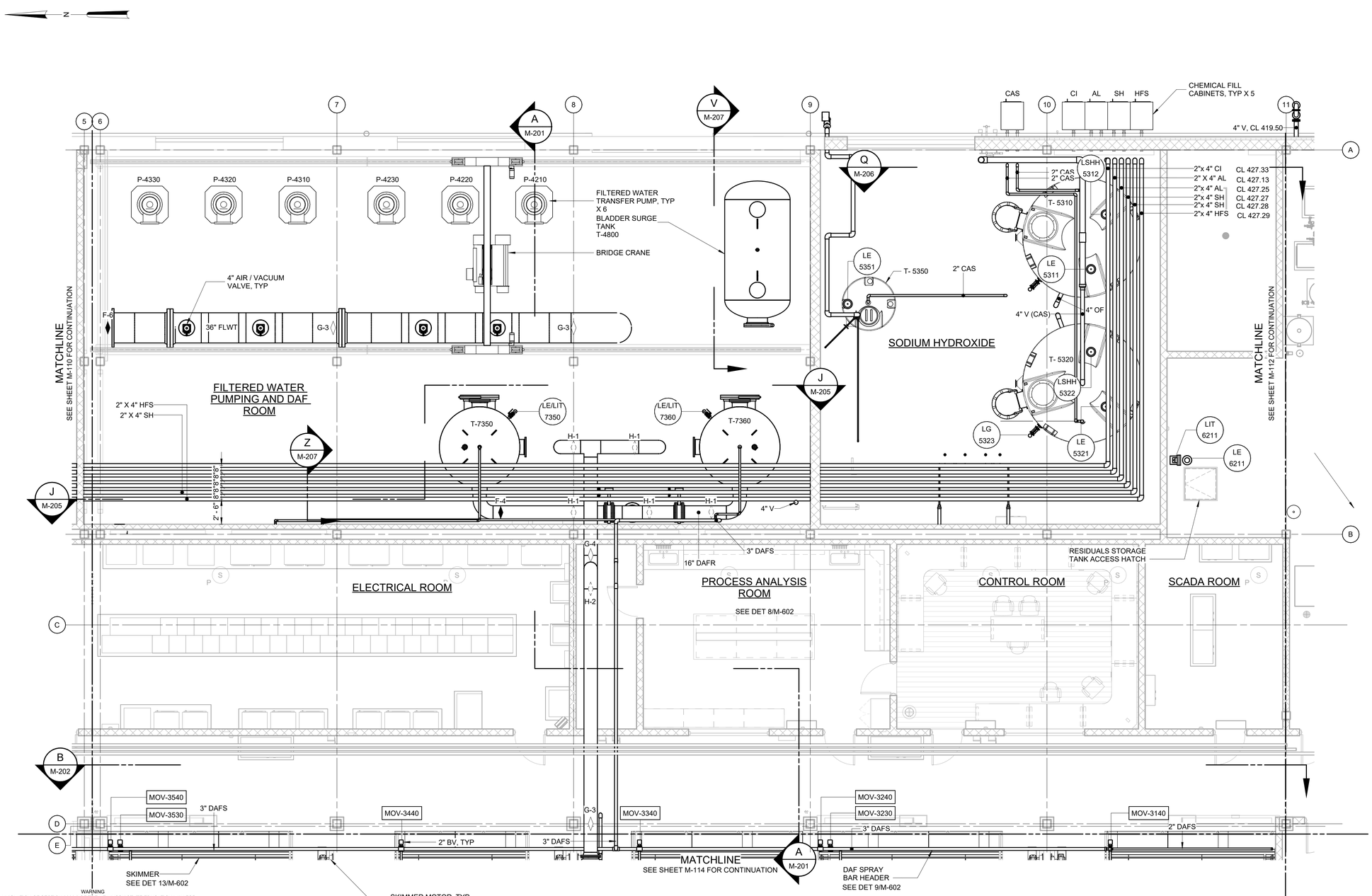

PARTIAL PLAN AT EL 421.00 - AREA 2

3/16" = 1'-0"

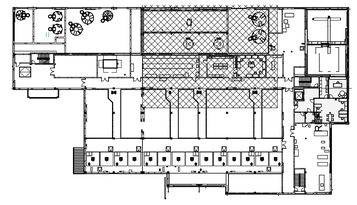

KEY PLAN

1/64" = 1'-0"

3/16" = 1'-0"

WARNING
IT IS A VIOLATION OF SECTION 7209.2 OF THE NEW YORK STATE EDUCATION LAW FOR ANY PERSON, UNLESS ACTING UNDER THE DIRECTION OF A LICENSED PROFESSIONAL ENGINEER, TO ALTER IN ANY WAY PLANS, SPECIFICATIONS, PLATS OR REPORTS TO WHICH THE SEAL OF A PROFESSIONAL ENGINEER HAS BEEN APPLIED. IF AN ITEM BEARING THE SEAL OF A PROFESSIONAL ENGINEER IS ALTERED, THE ALTERING ENGINEER SHALL AFFIX TO THE ITEM HIS SEAL AND THE NOTATION "ALTERED BY" FOLLOWED BY HIS SIGNATURE, THE DATE, AND A SPECIFIC DESCRIPTION OF THE ALTERATION.

REV	ISSUED FOR	DATE	BY

PROJECT ENGINEER:	R. FROST
DESIGNED BY:	C. THORNTON
DRAWN BY:	B. CASULL
CHECKED BY:	E. FELDMAN

IF THIS BAR DOES NOT MEASURE 1" THEN DRAWING IS NOT TO FULL SCALE 0 1/2" 1"

BID SET

STATE OF NEW YORK · McCARTHY · 085018 · LICENSED PROFESSIONAL ENGINEER

Hazen
HAZEN AND SAWYER
498 SEVENTH AVENUE, 11th FLOOR
NEW YORK, NEW YORK 10018

WESTCHESTER JOINT WATER WORKS
MAMARONECK, NY

RYE LAKE WATER FILTRATION PLANT
HARRISON, NY

FILTRATION PLANT
MECHANICAL
PARTIAL PLAN AT EL 421.00 - AREA 2

DATE:	FEB 2025
HAZEN NO.:	90388-000
CONTRACT NO.:	A1364-A
DRAWING NUMBER:	M-111

Autodesk Docs://90388-000_Rye_Lake_Filtration/90388-000-WFP-M.rvt
2/20/2025 1:05:39 AM

NOTE:

1. PROVIDE BIRD/INSECT SCREENS FOR ALL VENTS.

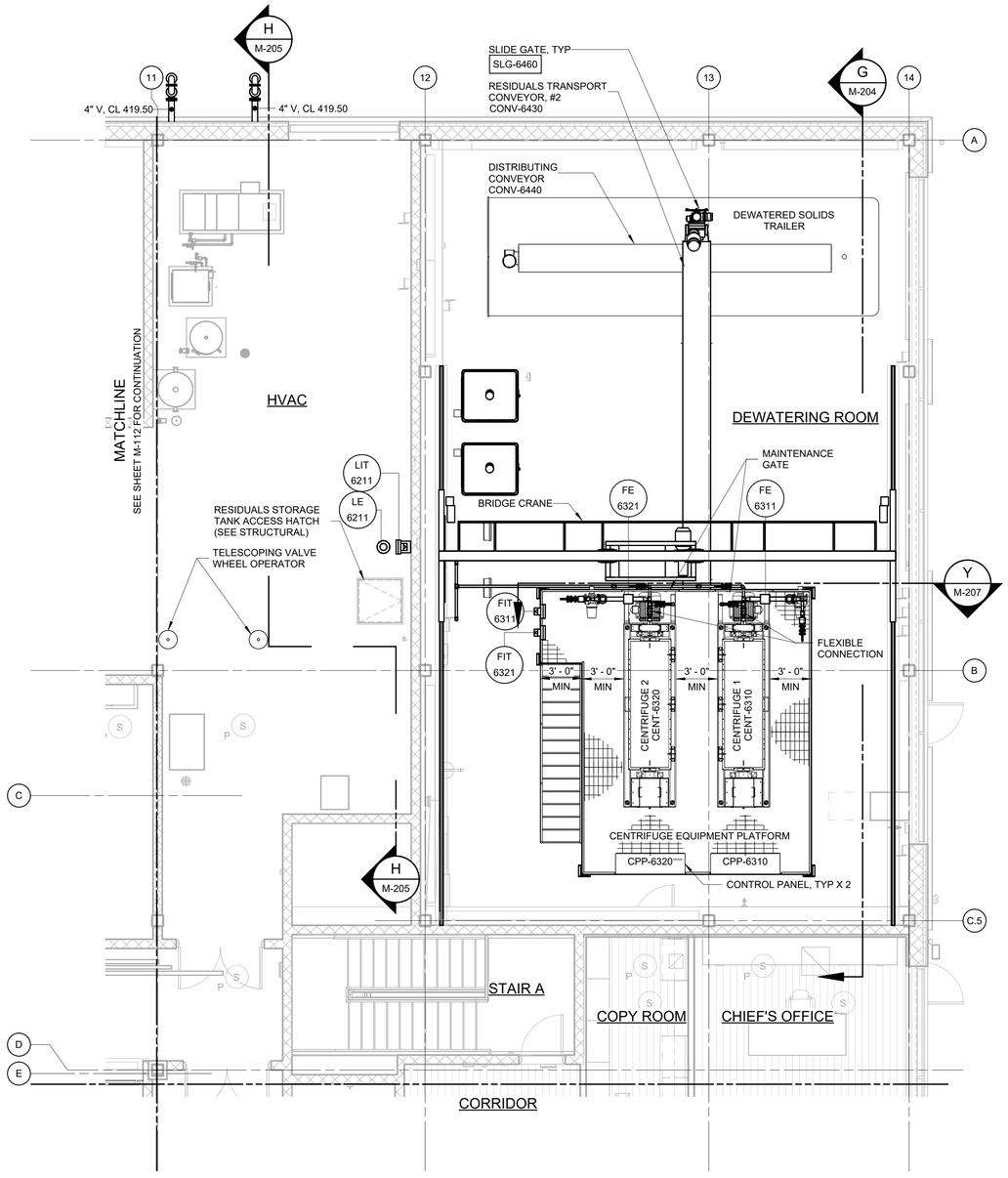

PARTIAL PLAN AT EL 421.00 - AREA 3

3/16" = 1'-0"

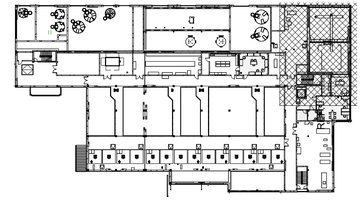

KEY PLAN

1/64" = 1'-0"

3/16" = 1'-0"

6 4 2 0 5'

WARNING
IT IS A VIOLATION OF SECTION 7209.2 OF THE NEW YORK STATE EDUCATION LAW FOR ANY PERSON, UNLESS ACTING UNDER THE DIRECTION OF A LICENSED PROFESSIONAL ENGINEER, TO ALTER IN ANY WAY PLANS, SPECIFICATIONS, PLATS OR REPORTS TO WHICH THE SEAL OF A PROFESSIONAL ENGINEER HAS BEEN APPLIED. IF AN ITEM BEARING THE SEAL OF A PROFESSIONAL ENGINEER IS ALTERED, THE ALTERING ENGINEER SHALL AFFIX TO THE ITEM HIS SEAL AND THE NOTATION "ALTERED BY" FOLLOWED BY HIS SIGNATURE, THE DATE, AND A SPECIFIC DESCRIPTION OF THE ALTERATION.

REV	ISSUED FOR	DATE	BY

PROJECT ENGINEER:	R. FROST
DESIGNED BY:	C. THORNTON
DRAWN BY:	B. CASULL
CHECKED BY:	E. FELDMAN

IF THIS BAR DOES NOT MEASURE 1" THEN DRAWING IS NOT TO FULL SCALE 0 1/2" 1"

BID SET

STATE OF NEW YORK · EDWARD J. McCARTHY · 085018 · LICENSED PROFESSIONAL ENGINEER

Hazen

HAZEN AND SAWYER
498 SEVENTH AVENUE, 11th FLOOR
NEW YORK, NEW YORK 10018

WESTCHESTER JOINT WATER WORKS
MAMARONECK, NY

RYE LAKE WATER FILTRATION PLANT
HARRISON, NY

FILTRATION PLANT
MECHANICAL
PARTIAL PLAN AT EL 421.00 - AREA 3

DATE:	FEB 2025
HAZEN NO.:	90388-000
CONTRACT NO.:	A1364-A
DRAWING NUMBER:	M-112

Autodesk Docs://90388-000_Rye_Lake_Filtration/90388-000-WFP-M.rvt
2/20/2025 1:05:44 AM

NOTE:

1. 12" AND 16" DAF RECYCLE (DAFR) PIPING INTENDED TO BE SUPPORTED BY THE COLUMNS USING PIPE SUPPORTS (SUCH AS M-40-0303). CONTRACTOR MAY SUBMIT ALTERNATE PIPE SUPPORTS FOR APPROVAL. PIPE SUPPORTS SHALL NOT EXTEND TO THE OPERATING FLOOR NOR THE ROOF.

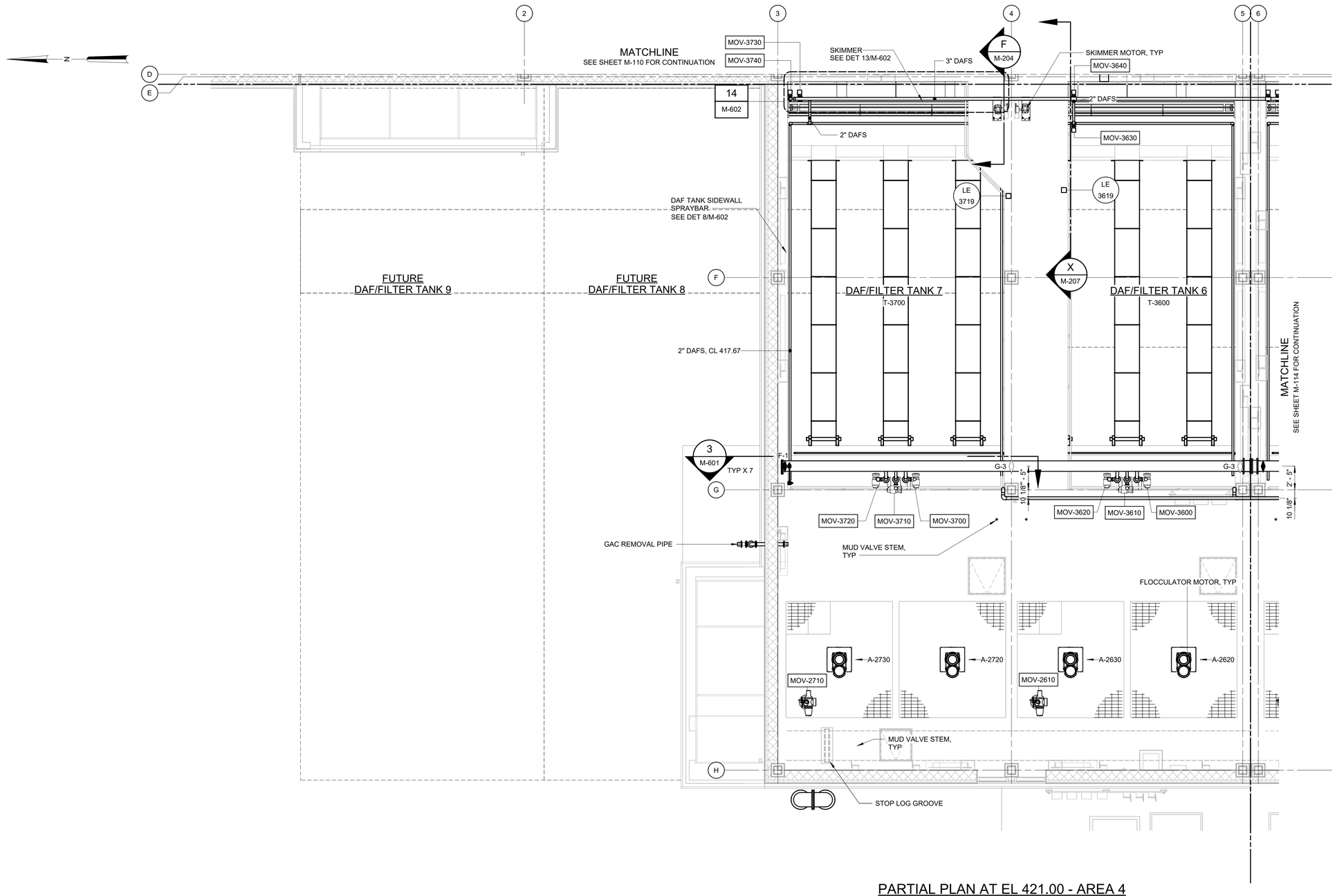

PARTIAL PLAN AT EL 421.00 - AREA 4

3/16" = 1'-0"

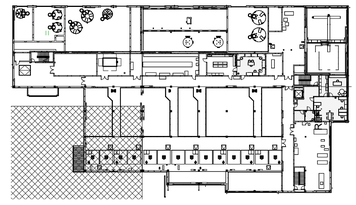

KEY PLAN

1/64" = 1'-0"

3/16" = 1'-0" 6 4 2 0 5'

WARNING
IT IS A VIOLATION OF SECTION 7209.2 OF THE NEW YORK STATE EDUCATION LAW FOR ANY PERSON, UNLESS ACTING UNDER THE DIRECTION OF A LICENSED PROFESSIONAL ENGINEER, TO ALTER IN ANY WAY PLANS, SPECIFICATIONS, PLATS OR REPORTS TO WHICH THE SEAL OF A PROFESSIONAL ENGINEER HAS BEEN APPLIED. IF AN ITEM BEARING THE SEAL OF A PROFESSIONAL ENGINEER IS ALTERED, THE ALTERING ENGINEER SHALL AFFIX TO THE ITEM HIS SEAL AND THE NOTATION "ALTERED BY" FOLLOWED BY HIS SIGNATURE, THE DATE, AND A SPECIFIC DESCRIPTION OF THE ALTERATION.

REV	ISSUED FOR	DATE	BY

PROJECT ENGINEER:	R. FROST
DESIGNED BY:	C. THORNTON
DRAWN BY:	B. CASULL
CHECKED BY:	E. FELDMAN

IF THIS BAR DOES NOT MEASURE 1" THEN DRAWING IS NOT TO FULL SCALE 0 1/2" 1"

BID SET

STATE OF NEW YORK · EILEEN M. McCARTHY FELDMAN · 085018 · LICENSED PROFESSIONAL ENGINEER

Hazen

HAZEN AND SAWYER
498 SEVENTH AVENUE, 11th FLOOR
NEW YORK, NEW YORK 10018

WESTCHESTER JOINT WATER WORKS
MAMARONECK, NY

RYE LAKE WATER FILTRATION PLANT
HARRISON, NY

FILTRATION PLANT
MECHANICAL
PARTIAL PLAN AT EL 421.00 - AREA 4

DATE:	FEB 2025
HAZEN NO.:	90388-000
CONTRACT NO.:	A1364-A
DRAWING NUMBER:	M-113

Autodesk Docs://90388-000_Rye_Lake_Filtration/90388-000-WFP-M.rvt
2/20/2025 1:05:49 AM

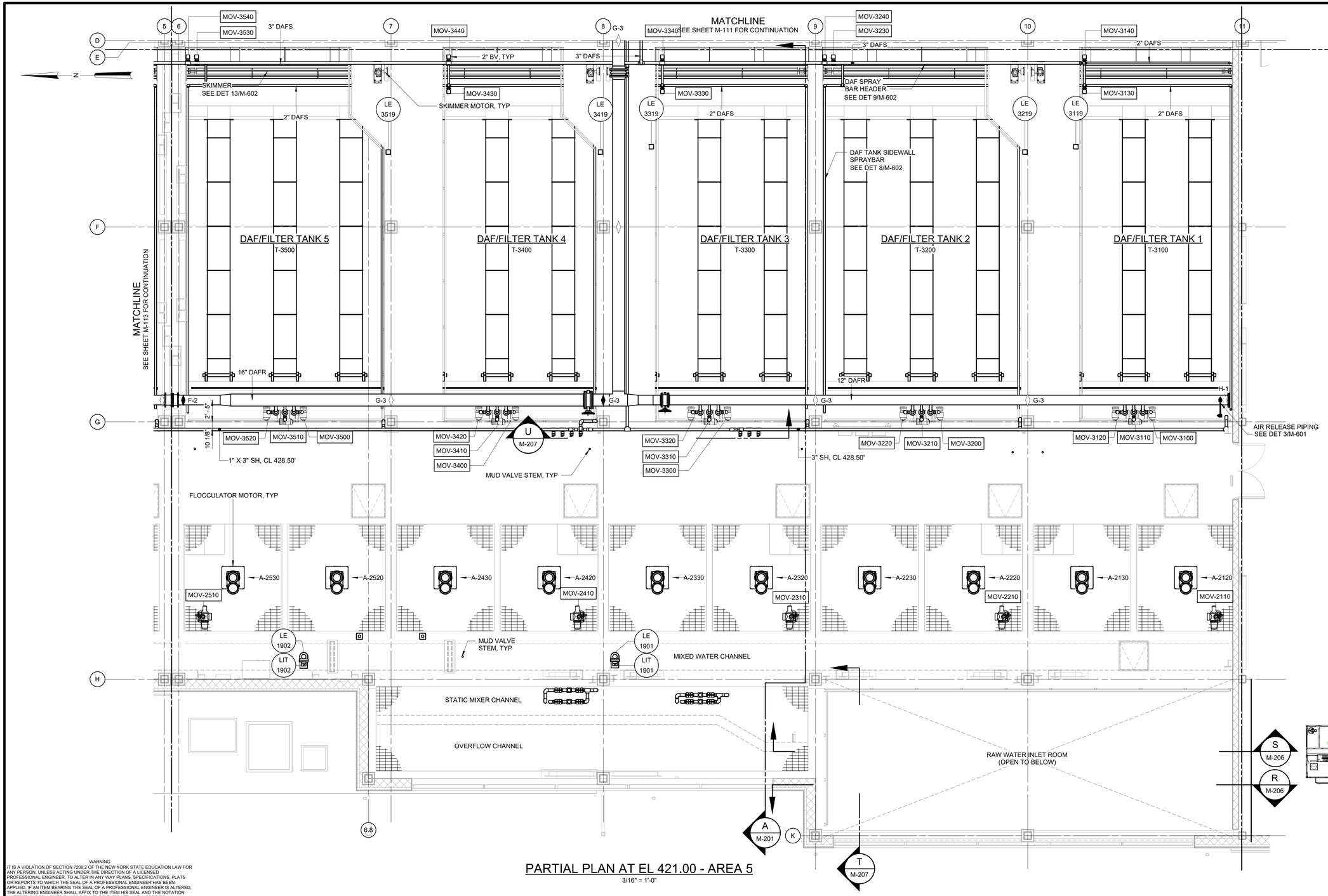

PARTIAL PLAN AT EL 421.00 - AREA 5

3/16" = 1'-0"

NOTE:

1. 12" AND 16" DAF RECYCLE (DAFR) PIPING INTENDED TO BE SUPPORTED BY THE COLUMNS USING PIPE SUPPORTS (SUCH AS M-40-0303). CONTRACTOR MAY SUBMIT ALTERNATE PIPE SUPPORTS FOR APPROVAL. PIPE SUPPORTS SHALL NOT EXTEND TO THE OPERATING FLOOR NOR THE ROOF.

LEGEND:

- GUIDED SUPPORT
- FIXED ANCHOR SUPPORT
- HANGER ROD

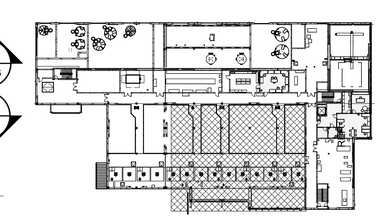

KEY PLAN

1/64" = 1'-0"

1/8" = 1'-0"

8 6 4 2 0 8'

WARNING

IT IS A VIOLATION OF SECTION 7209.2 OF THE NEW YORK STATE EDUCATION LAW FOR ANY PERSON, UNLESS ACTING UNDER THE DIRECTION OF A LICENSED PROFESSIONAL ENGINEER, TO ALTER IN ANY WAY PLANS, SPECIFICATIONS, PLATS OR REPORTS TO WHICH THE SEAL OF A PROFESSIONAL ENGINEER HAS BEEN APPLIED. IF AN ITEM BEARING THE SEAL OF A PROFESSIONAL ENGINEER IS ALTERED, THE ALTERING ENGINEER SHALL AFFIX TO THE ITEM HIS SEAL AND THE NOTATION "ALTERED BY" FOLLOWED BY HIS SIGNATURE, THE DATE, AND A SPECIFIC DESCRIPTION OF THE ALTERATION.

REV	ISSUED FOR	DATE	BY

PROJECT ENGINEER:	R. FROST
DESIGNED BY:	C. THORNTON
DRAWN BY:	B. CASULL
CHECKED BY:	E. FELDMAN

IF THIS BAR DOES NOT MEASURE 1" THEN DRAWING IS NOT TO FULL SCALE 0 1/2" 1"

BID SET

STATE OF NEW YORK · ELLEN McCARTHY FELDMAN · 085018 · LICENSED PROFESSIONAL ENGINEER

Hazen

HAZEN AND SAWYER
498 SEVENTH AVENUE, 11th FLOOR
NEW YORK, NEW YORK 10018

WESTCHESTER JOINT WATER WORKS
MAMARONECK, NY

RYE LAKE WATER FILTRATION PLANT
HARRISON, NY

FILTRATION PLANT
MECHANICAL
PARTIAL PLAN AT EL 421.00 - AREA 5

DATE:	FEB 2025
HAZEN NO.:	90388-000
CONTRACT NO.:	A1364-A
DRAWING NUMBER:	M-114

Autodesk Docs://90388-000_Rye_Lake_Filtration/90388-000-WFP-M.rvt
2/20/2025 1:05:53 AM

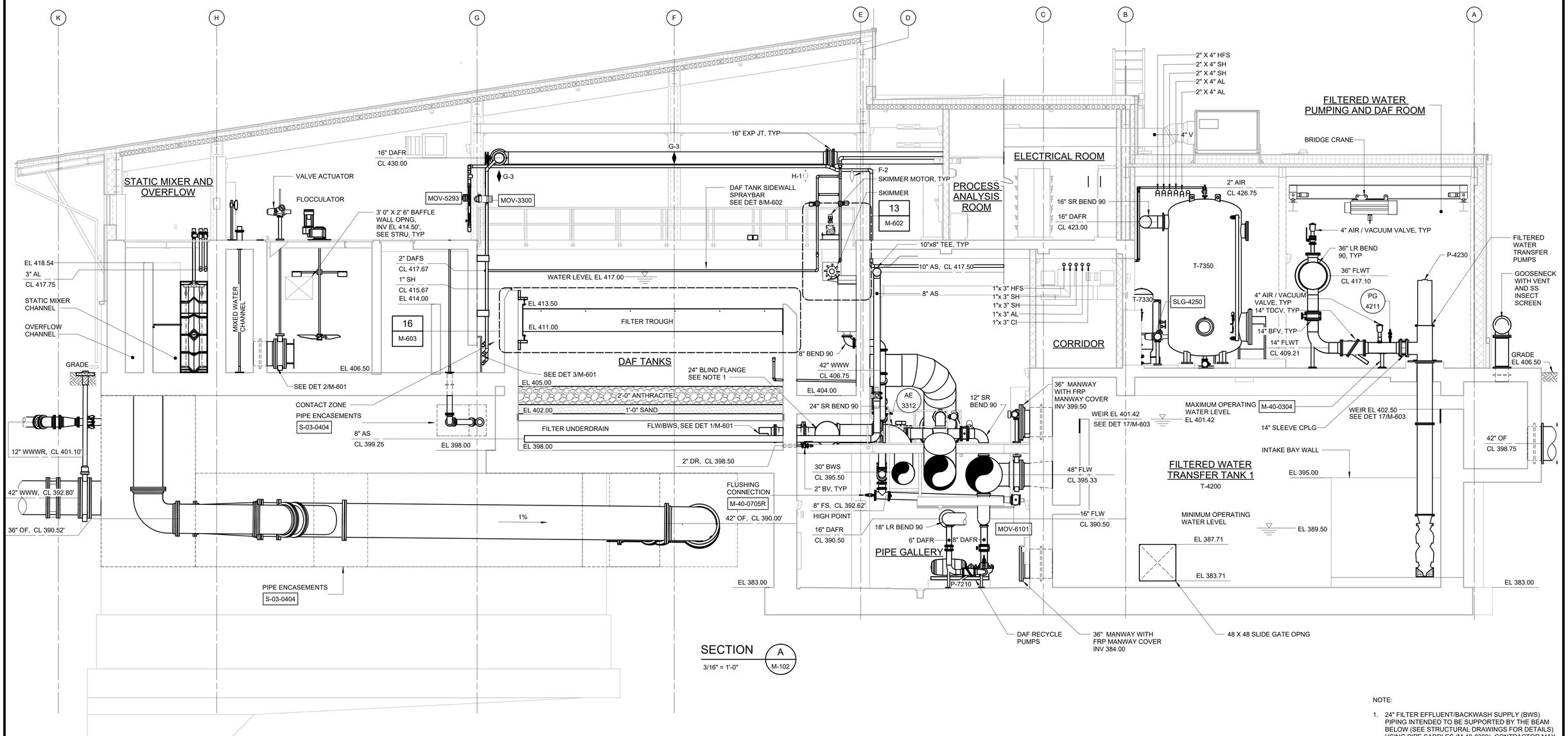

SECTION A
3/16" = 1'-0"
M-102

NOTE:

1. 24" FILTER EFFLUENT/BACKWASH SUPPLY (BWS) PIPING INTENDED TO BE SUPPORTED BY THE BEAM BELOW (SEE STRUCTURAL DRAWINGS FOR DETAILS) USING PIPE SADDLES (M-40-0309). CONTRACTOR MAY SUBMIT ALTERNATE PIPE SUPPORTS FOR APPROVAL. PIPE SUPPORTS SHALL NOT EXTEND TO THE GALLERY FLOOR.
2. PROVIDE BIRD/INSECT SCREENS FOR ALL VENTS.

3/16" = 1'-0" (6 4 2 0 5')

WARNING
IT IS A VIOLATION OF SECTION 7209.2 OF THE NEW YORK STATE EDUCATION LAW FOR ANY PERSON, UNLESS ACTING UNDER THE DIRECTION OF A LICENSED PROFESSIONAL ENGINEER, TO ALTER IN ANY WAY PLANS, SPECIFICATIONS, PLATS OR REPORTS TO WHICH THE SEAL OF A PROFESSIONAL ENGINEER HAS BEEN APPLIED. IF AN ITEM BEARING THE SEAL OF A PROFESSIONAL ENGINEER IS ALTERED, THE ALTERING ENGINEER SHALL AFFIX TO THE ITEM HIS SEAL AND THE NOTATION "ALTERED BY" FOLLOWED BY HIS SIGNATURE, THE DATE, AND A SPECIFIC DESCRIPTION OF THE ALTERATION.

REV	ISSUED FOR	DATE	BY

PROJECT ENGINEER:	R. FROST
DESIGNED BY:	C. THORNTON
DRAWN BY:	B. CASULL
CHECKED BY:	E. FELDMAN

IF THIS BAR DOES NOT MEASURE 1" THEN DRAWING IS NOT TO FULL SCALE (0 1/2" 1")

BID SET

STATE OF NEW YORK · ELIZABETH A. McCARTHY · 085018 · LICENSED PROFESSIONAL ENGINEER

Hazen
HAZEN AND SAWYER
498 SEVENTH AVENUE, 11th FLOOR
NEW YORK, NEW YORK 10018

WESTCHESTER JOINT WATER WORKS
MAMARONECK, NY

RYE LAKE WATER FILTRATION PLANT
HARRISON, NY

FILTRATION PLANT
MECHANICAL
SECTIONS - SHEET 1

DATE:	FEB 2025
HAZEN NO.:	90388-000
CONTRACT NO.:	A1364-A
DRAWING NUMBER:	M-201

Autodesk Docs://90388-000_Rye_Lake_Filtration/90388-000-WFP-M.rvt
2/20/2025 1:06:00 AM

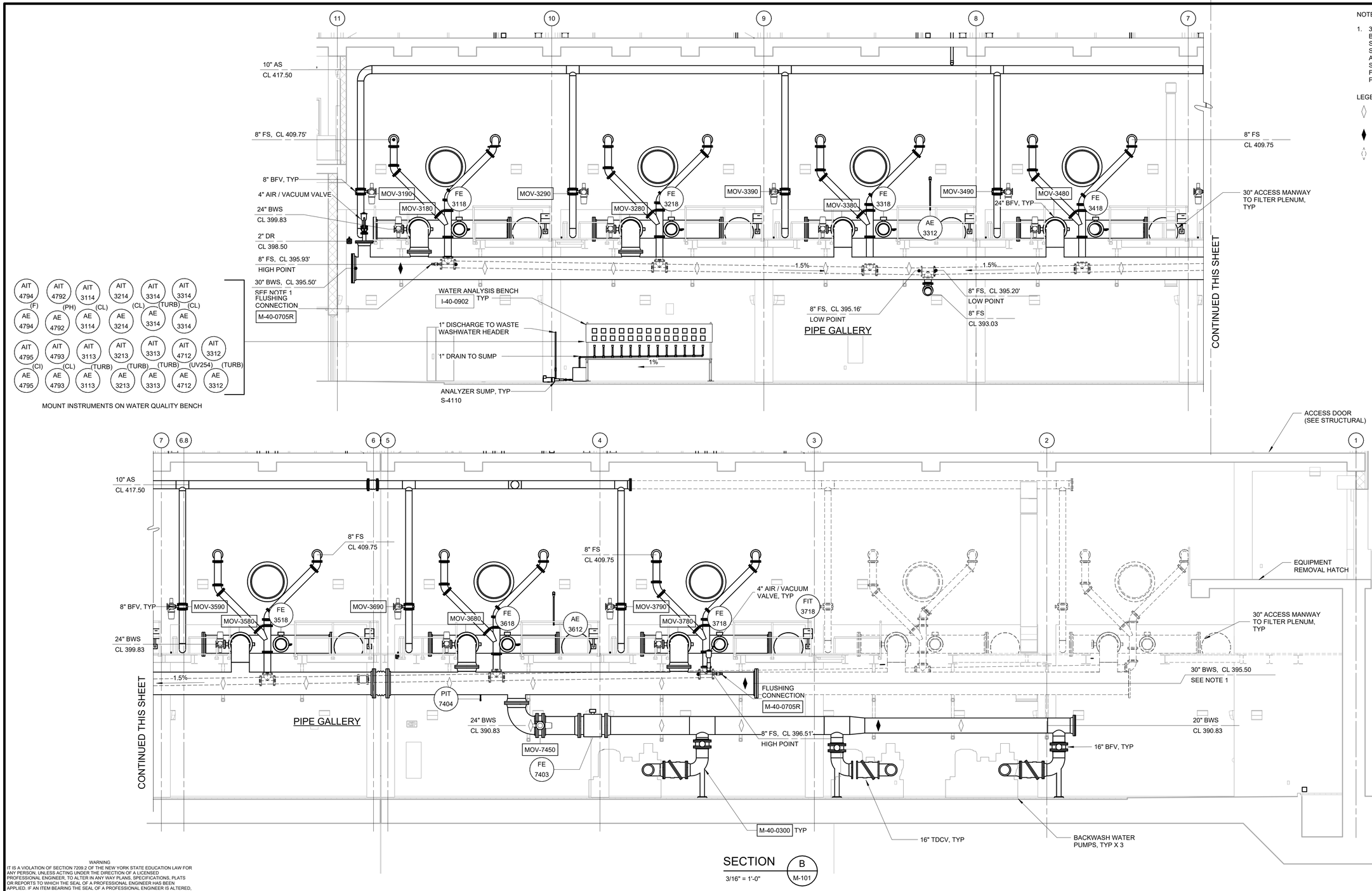

SECTION B
3/16" = 1'-0"
M-101

3/16" = 1'-0"
6 4 2 0 5'

NOTE:

1. 30" BACKWASH SUPPLY (BWS) PIPING INTENDED TO BE SUPPORTED BY THE TRAPEZE BEAM (SEE STRUCTURAL DRAWINGS FOR DETAILS) USING PIPE SADDLES (M-40-0309). CONTRACTOR MAY SUBMIT ALTERNATE PIPE SUPPORTS FOR APPROVAL. PIPE SUPPORTS SHALL NOT BE EXTEND TO THE GALLERY FLOOR NOR EXTEND ABOVE THE ACCESS PLATFORM.

LEGEND:

- GUIDED SUPPORT
- FIXED ANCHOR SUPPORT
- HANGER ROD

WARNING
IT IS A VIOLATION OF SECTION 7209.2 OF THE NEW YORK STATE EDUCATION LAW FOR ANY PERSON, UNLESS ACTING UNDER THE DIRECTION OF A LICENSED PROFESSIONAL ENGINEER, TO ALTER IN ANY WAY PLANS, SPECIFICATIONS, PLATS OR REPORTS TO WHICH THE SEAL OF A PROFESSIONAL ENGINEER HAS BEEN APPLIED. IF AN ITEM BEARING THE SEAL OF A PROFESSIONAL ENGINEER IS ALTERED, THE ALTERING ENGINEER SHALL AFFIX TO THE ITEM HIS SEAL AND THE NOTATION "ALTERED BY" FOLLOWED BY HIS SIGNATURE, THE DATE, AND A SPECIFIC DESCRIPTION OF THE ALTERATION.

REV	ISSUED FOR	DATE	BY

PROJECT ENGINEER:	R. FROST
DESIGNED BY:	C. THORNTON
DRAWN BY:	B. CASULL
CHECKED BY:	E. FELDMAN

IF THIS BAR DOES NOT MEASURE 1" THEN DRAWING IS NOT TO FULL SCALE 0 1/2" 1"

BID SET

STATE OF NEW YORK · EDWARD J. McCARTHY · 085018 · LICENSED PROFESSIONAL ENGINEER

Hazen

HAZEN AND SAWYER
498 SEVENTH AVENUE, 11th FLOOR
NEW YORK, NEW YORK 10018

WESTCHESTER JOINT WATER WORKS
MAMARONECK, NY

RYE LAKE WATER FILTRATION PLANT
HARRISON, NY

FILTRATION PLANT
MECHANICAL
SECTIONS - SHEET 2

DATE:	FEB 2025
HAZEN NO.:	90388-000
CONTRACT NO.:	A1364-A
DRAWING NUMBER:	M-202

Autodesk Docs://90388-000_Rye_Lake_Filtration/90388-000-WFP-M.rvt
2/20/2025 1:06:04 AM

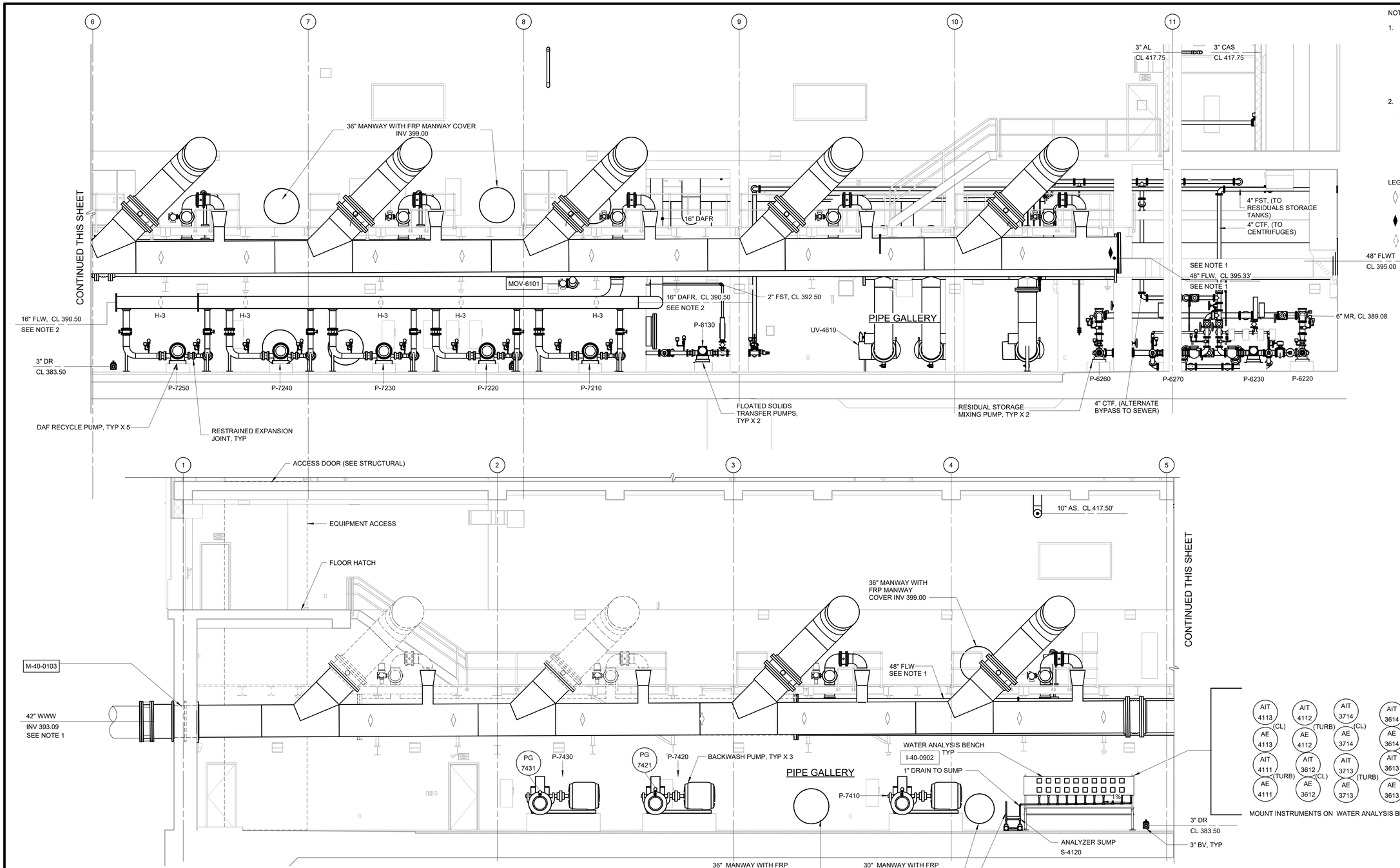

NOTES:

1. 42" WASTE WASHWATER (WWW) PIPING AND 48" FILTERED WATER (FLW) PIPING INTENDED TO BE SUPPORTED BY THE TRAPEZE BEAM (SEE STRUCTURAL DRAWINGS FOR DETAILS) USING PIPE SADDLES (M-40-0309). CONTRACTOR MAY SUBMIT ALTERNATE PIPE SUPPORTS FOR APPROVAL. PIPE SUPPORTS SHALL NOT EXTEND TO THE GALLERY FLOOR NOR EXTEND ABOVE THE ACCESS PLATFORM.
2. DAFR PUMP SUCTION (FLW) AND DISHCARGE (DAFR) HEADERS AT ELEVATION 390.50 ARE INTENDED TO BE SUPPORTED BY THE TRAPEZE BEAM ABOVE USING BRACED HANGER SUPPORTS (M-40-0306R) (SEE STRUCTURAL DRAWINGS FOR DETAILS). CONTRACTOR MAY SUBMIT ALTERNATE PIPE SUPPORTS FOR APPROVAL. PIPE SUPPORTS SHALL NOT EXTEND TO THE GALLERY FLOOR NOR EXTEND ABOVE THE ACCESS PLATFORM.

LEGEND:

- GUIDED SUPPORT
- FIXED ANCHOR SUPPORT
- HANGER ROD

SECTION C M-101

3/16" = 1'-0"

3/16" = 1'-0"

6 4 2 0 5'

WARNING
IT IS A VIOLATION OF SECTION 7209.2 OF THE NEW YORK STATE EDUCATION LAW FOR ANY PERSON, UNLESS ACTING UNDER THE DIRECTION OF A LICENSED PROFESSIONAL ENGINEER, TO ALTER IN ANY WAY PLANS, SPECIFICATIONS, PLATS OR REPORTS TO WHICH THE SEAL OF A PROFESSIONAL ENGINEER HAS BEEN APPLIED. IF AN ITEM BEARING THE SEAL OF A PROFESSIONAL ENGINEER IS ALTERED, THE ALTERING ENGINEER SHALL AFFIX TO THE ITEM HIS SEAL AND THE NOTATION "ALTERED BY" FOLLOWED BY HIS SIGNATURE, THE DATE, AND A SPECIFIC DESCRIPTION OF THE ALTERATION.

REV	ISSUED FOR	DATE	BY

PROJECT ENGINEER:	R. FROST
DESIGNED BY:	C. THORNTON
DRAWN BY:	B. CASULL
CHECKED BY:	E. FELDMAN

IF THIS BAR DOES NOT MEASURE 1" THEN DRAWING IS NOT TO FULL SCALE 0 1/2" 1"

BID SET

STATE OF NEW YORK · EDWARD J. McCARTHY · 085018 · LICENSED PROFESSIONAL ENGINEER

Hazen

HAZEN AND SAWYER
498 SEVENTH AVENUE, 11th FLOOR
NEW YORK, NEW YORK 10018

WESTCHESTER JOINT WATER WORKS
MAMARONECK, NY

RYE LAKE WATER FILTRATION PLANT
HARRISON, NY

FILTRATION PLANT
MECHANICAL
SECTIONS - SHEET 3

DATE:	FEB 2025
HAZEN NO.:	90388-000
CONTRACT NO.:	A1364-A
DRAWING NUMBER:	M-203

Autodesk Docs://90388-000_Rye_Lake_Filtration/90388-000-WFP-M.rvt
2/20/2025 1:06:10 AM

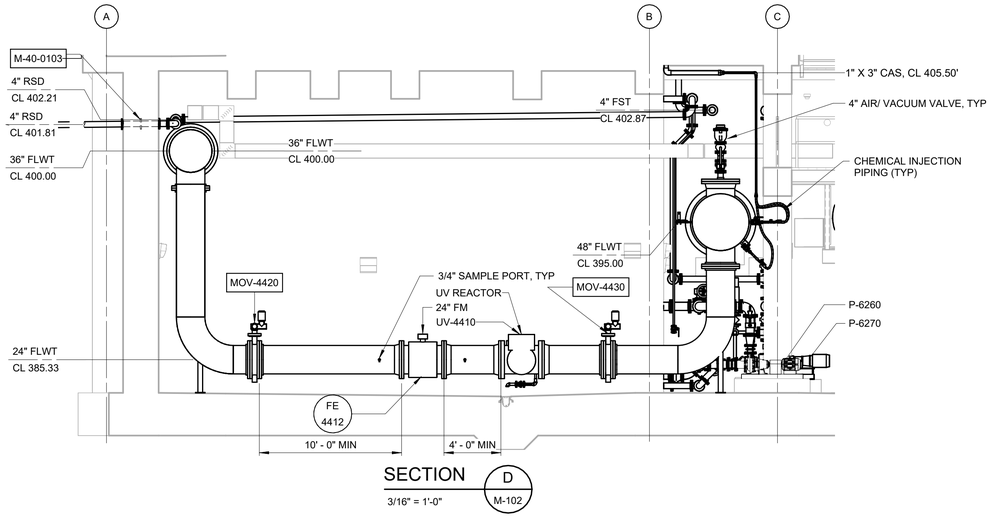

SECTION D
3/16" = 1'-0"
M-102

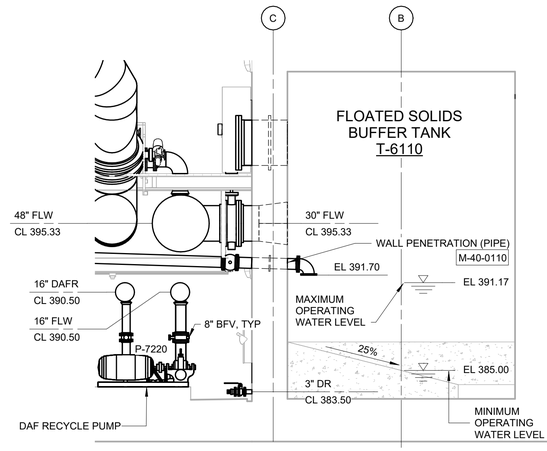

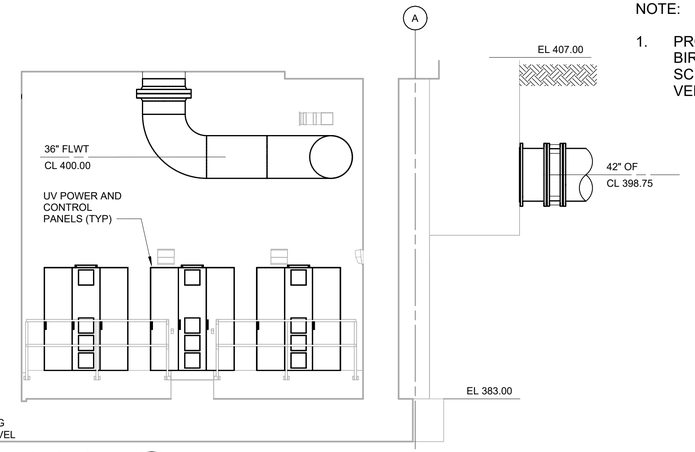

SECTION E
3/16" = 1'-0"
M-102

NOTE:

1. PROVIDE BIRD/INSECT SCREENS FOR ALL VENTS.

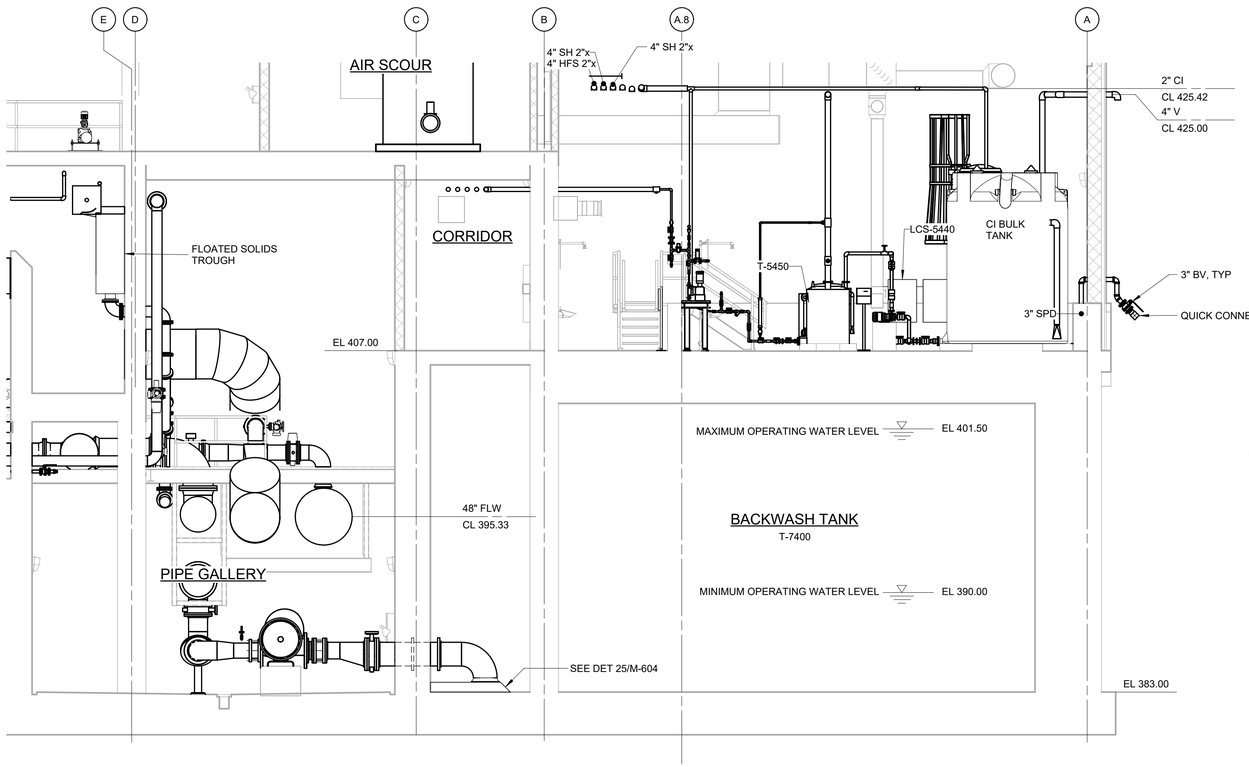

SECTION F
3/16" = 1'-0"
M-103

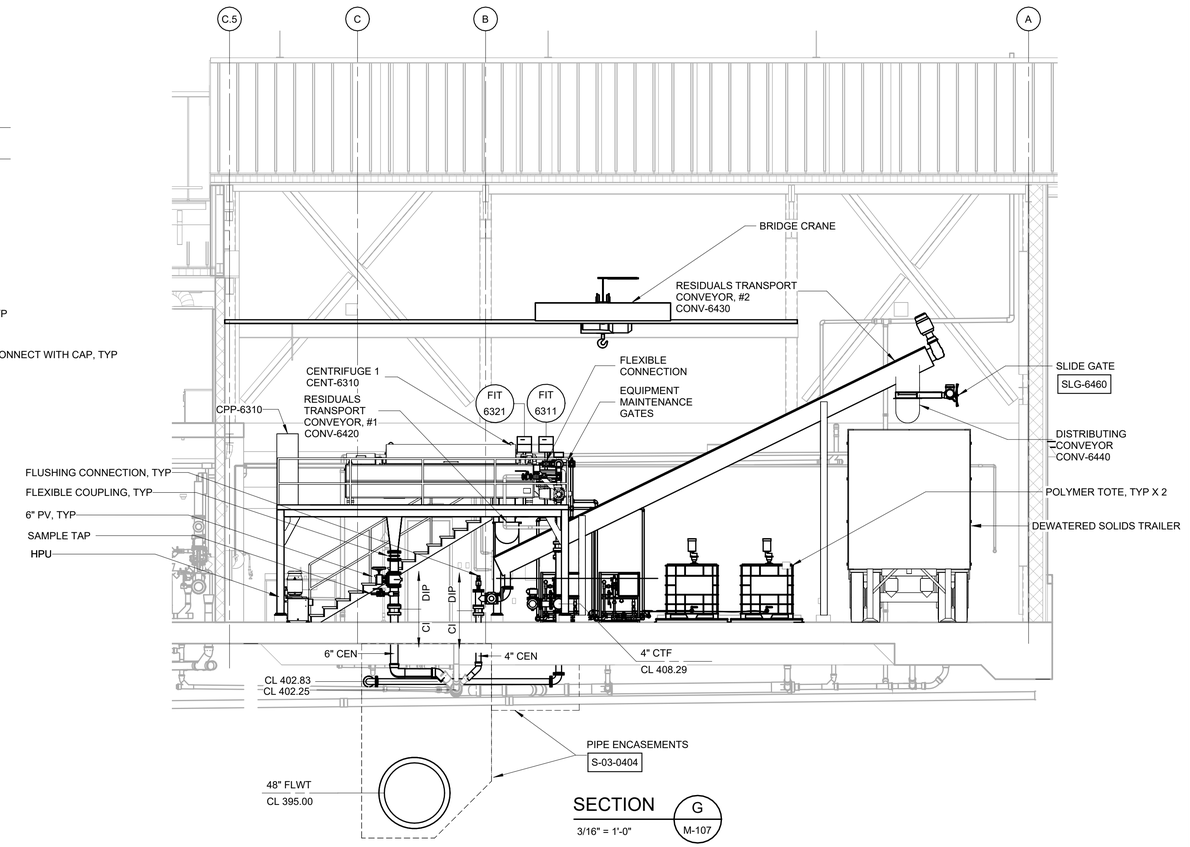

SECTION G
3/16" = 1'-0"
M-107

3/16" = 1'-0"
6 4 2 0 5'

WARNING
IT IS A VIOLATION OF SECTION 7209.2 OF THE NEW YORK STATE EDUCATION LAW FOR ANY PERSON, UNLESS ACTING UNDER THE DIRECTION OF A LICENSED PROFESSIONAL ENGINEER, TO ALTER IN ANY WAY PLANS, SPECIFICATIONS, PLATS OR REPORTS TO WHICH THE SEAL OF A PROFESSIONAL ENGINEER HAS BEEN APPLIED. IF AN ITEM BEARING THE SEAL OF A PROFESSIONAL ENGINEER IS ALTERED, THE ALTERING ENGINEER SHALL AFFIX TO THE ITEM HIS SEAL AND THE NOTATION "ALTERED BY" FOLLOWED BY HIS SIGNATURE, THE DATE, AND A SPECIFIC DESCRIPTION OF THE ALTERATION.

REV	ISSUED FOR	DATE	BY

PROJECT ENGINEER:	R. FROST
DESIGNED BY:	C. THORNTON
DRAWN BY:	B. CASULL
CHECKED BY:	E. FELDMAN
IF THIS BAR DOES NOT MEASURE 1" THEN DRAWING IS NOT TO FULL SCALE	0 1/2" 1"

BID SET

STATE OF NEW YORK · McCARTHY · 085018 · LICENSED PROFESSIONAL ENGINEER

Hazen

HAZEN AND SAWYER
498 SEVENTH AVENUE, 11th FLOOR
NEW YORK, NEW YORK 10018

WESTCHESTER JOINT WATER WORKS
MAMARONECK, NY

RYE LAKE WATER FILTRATION PLANT
HARRISON, NY

FILTRATION PLANT
MECHANICAL
SECTIONS - SHEET 4

DATE:	FEB 2025
HAZEN NO.:	90388-000
CONTRACT NO.:	A1364-A
DRAWING NUMBER:	M-204

Autodesk Docs://90388-000_Rye_Lake_Filtration/90388-000-WFP-M.rvt
2/20/2025 1:06:17 AM

NOTE:

1. PROVIDE BIRD/INSECT SCREENS FOR ALL VENTS.

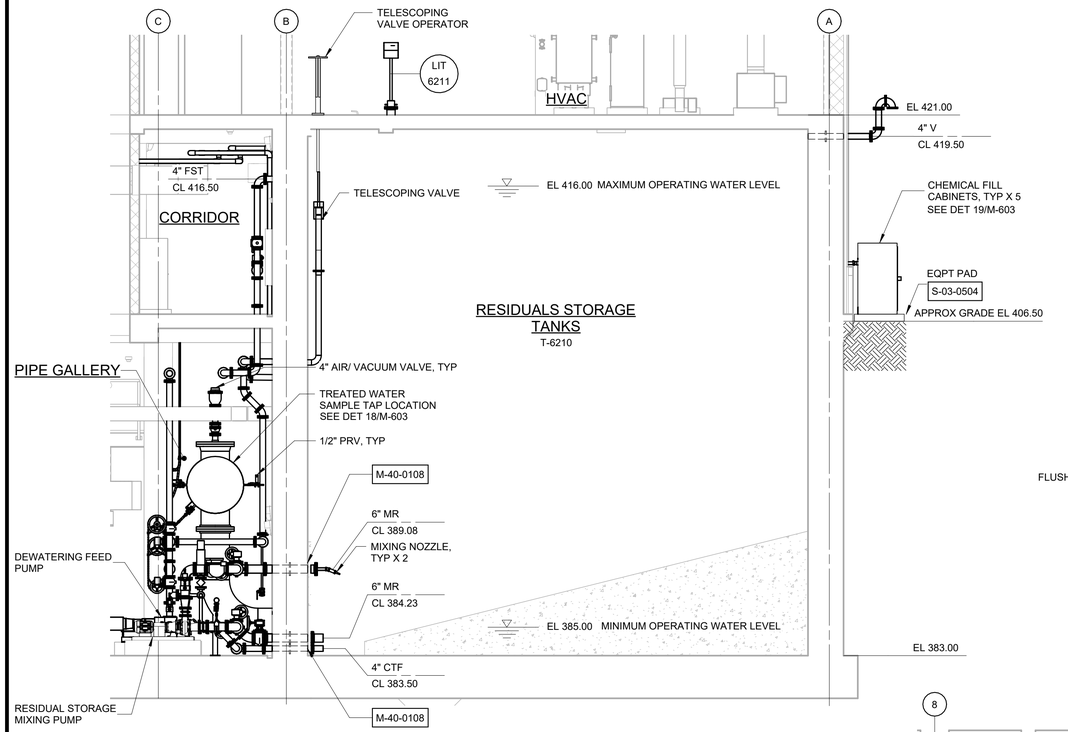

SECTION H
3/16" = 1'-0"
M-102

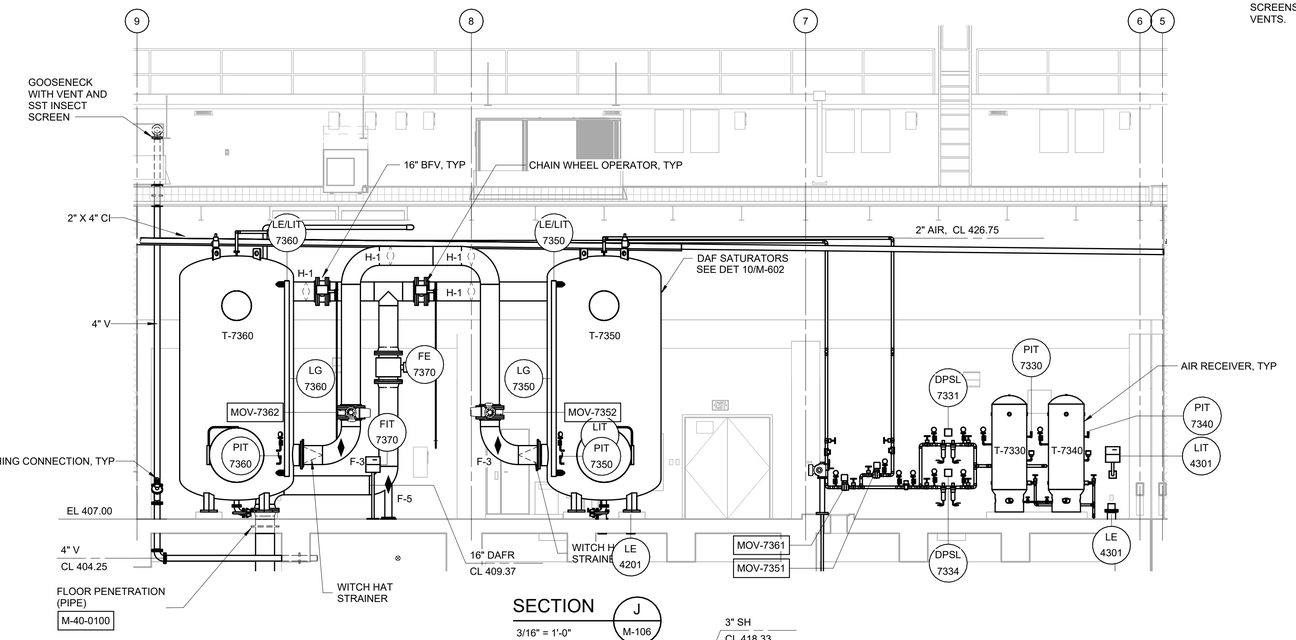

SECTION J
3/16" = 1'-0"
M-106

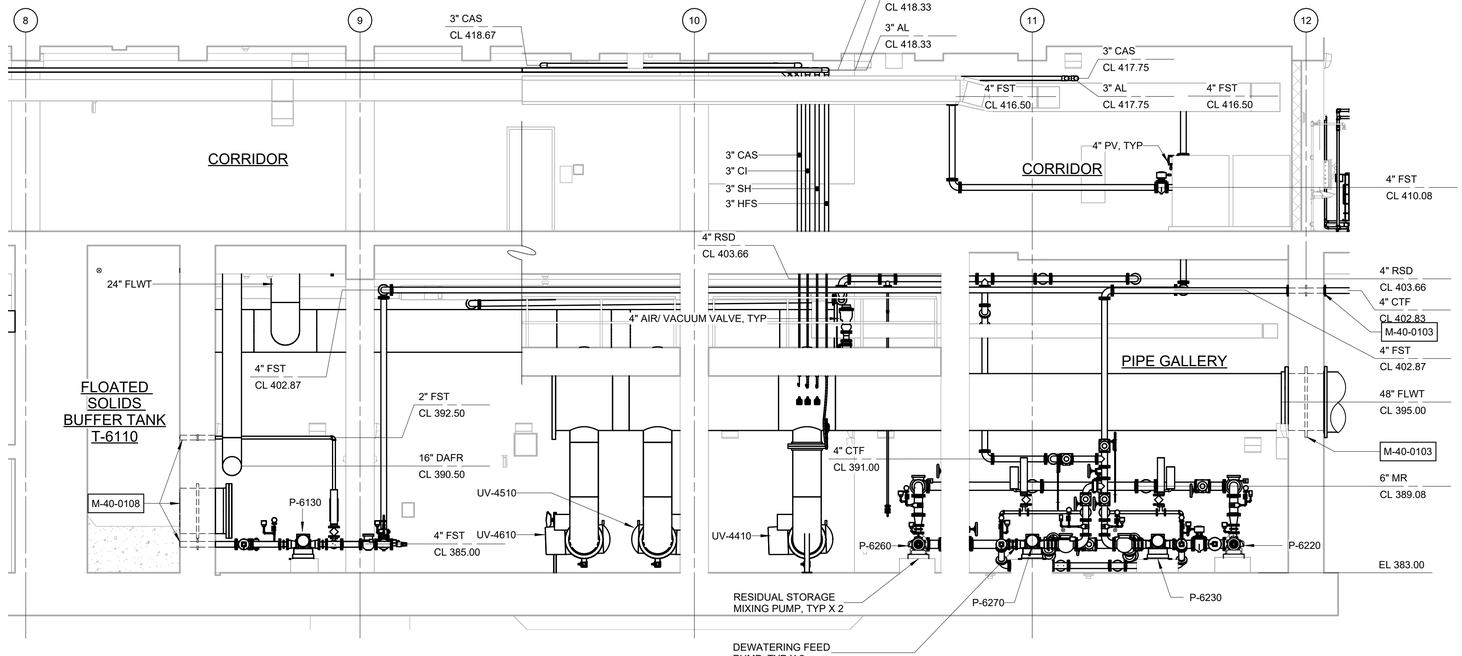

SECTION L
3/16" = 1'-0"
M-102

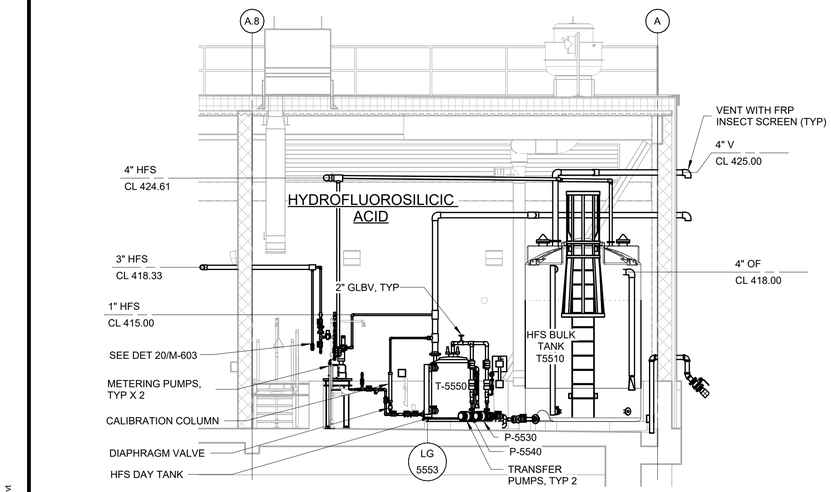

SECTION K
3/16" = 1'-0"
M-105

WARNING
IT IS A VIOLATION OF SECTION 7209.2 OF THE NEW YORK STATE EDUCATION LAW FOR ANY PERSON, UNLESS ACTING UNDER THE DIRECTION OF A LICENSED PROFESSIONAL ENGINEER, TO ALTER IN ANY WAY PLANS, SPECIFICATIONS, PLATS OR REPORTS TO WHICH THE SEAL OF A PROFESSIONAL ENGINEER HAS BEEN APPLIED. IF AN ITEM BEARING THE SEAL OF A PROFESSIONAL ENGINEER IS ALTERED, THE ALTERING ENGINEER SHALL AFFIX TO THE ITEM HIS SEAL AND THE NOTATION "ALTERED BY" FOLLOWED BY HIS SIGNATURE, THE DATE, AND A SPECIFIC DESCRIPTION OF THE ALTERATION.

3/16" = 1'-0"

REV	ISSUED FOR	DATE	BY

PROJECT ENGINEER:	R. FROST
DESIGNED BY:	C. THORNTON
DRAWN BY:	B. CASULL
CHECKED BY:	E. FELDMAN

IF THIS BAR DOES NOT MEASURE 1" THEN DRAWING IS NOT TO FULL SCALE 0 1/2" 1"

BID SET

STATE OF NEW YORK · EDWARD J. McCARTHY · 085018 · LICENSED PROFESSIONAL ENGINEER

Hazen

HAZEN AND SAWYER
498 SEVENTH AVENUE, 11th FLOOR
NEW YORK, NEW YORK 10018

WESTCHESTER JOINT WATER WORKS
MAMARONECK, NY

RYE LAKE WATER FILTRATION PLANT
HARRISON, NY

FILTRATION PLANT
MECHANICAL
SECTIONS - SHEET 5

DATE:	FEB 2025
HAZEN NO.:	90388-000
CONTRACT NO.:	A1364-A
DRAWING NUMBER:	M-205

Autodesk Docs://90388-000_Rye_Lake_Filtration/90388-000-WFP-M.rvt
2/20/2025 1:06:25 AM

NOTE:

1. PROVIDE BIRD/INSECT SCREENS FOR ALL VENTS.

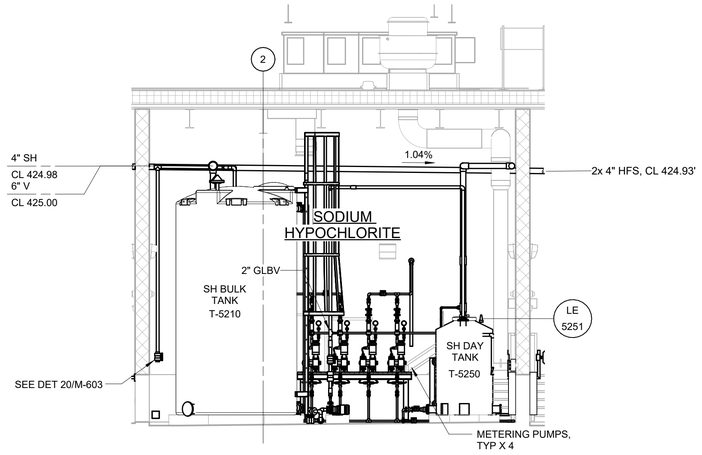

SECTION M
3/16" = 1'-0"
M-105

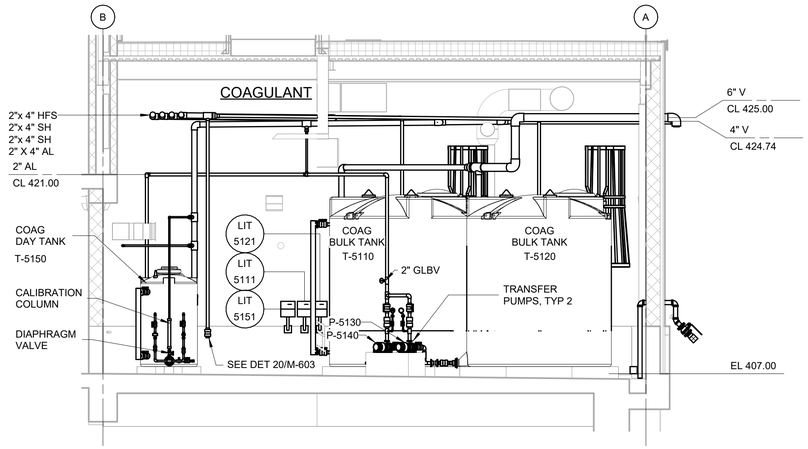

SECTION N
3/16" = 1'-0"
M-105

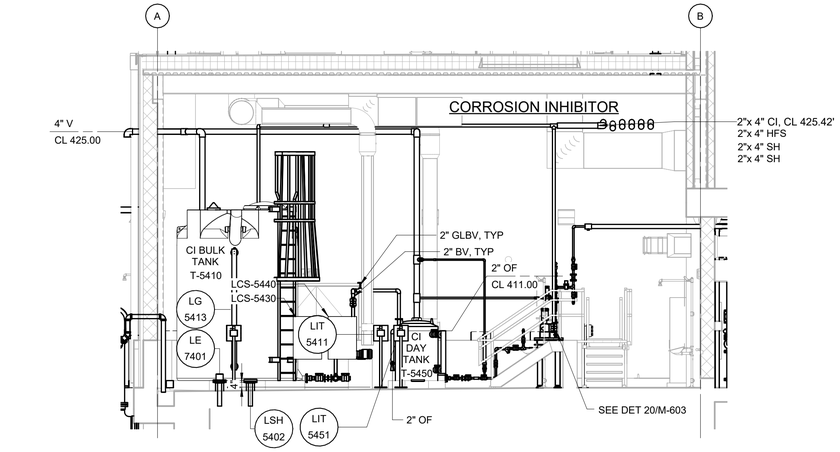

SECTION P
3/16" = 1'-0"
M-105

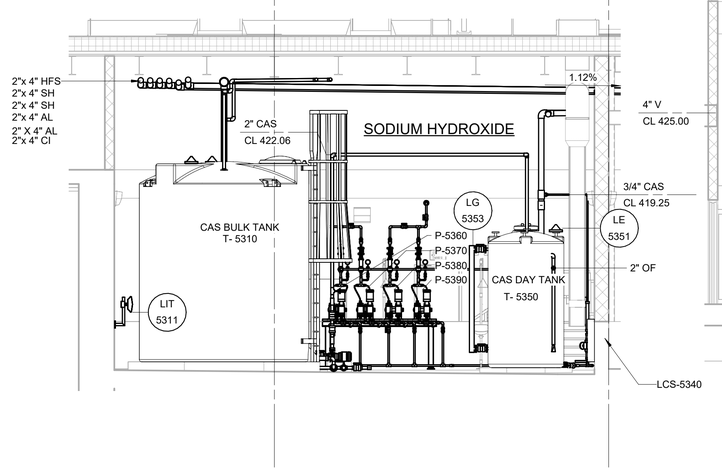

SECTION Q
3/16" = 1'-0"
M-106

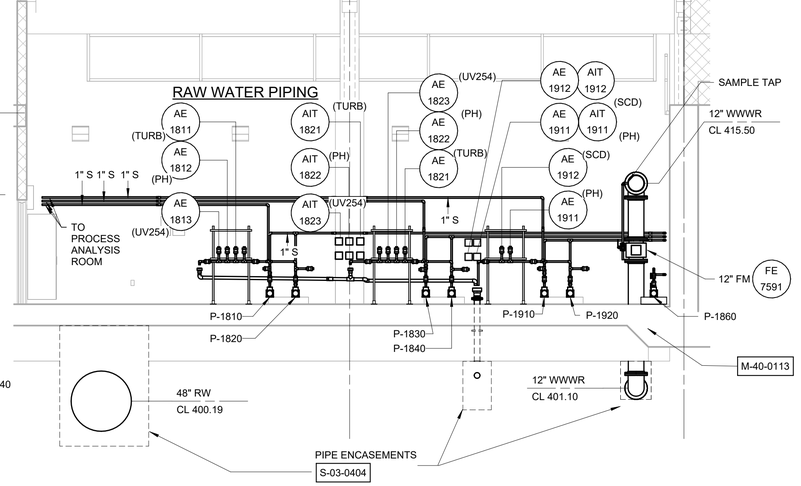

SECTION R
3/16" = 1'-0"
M-109

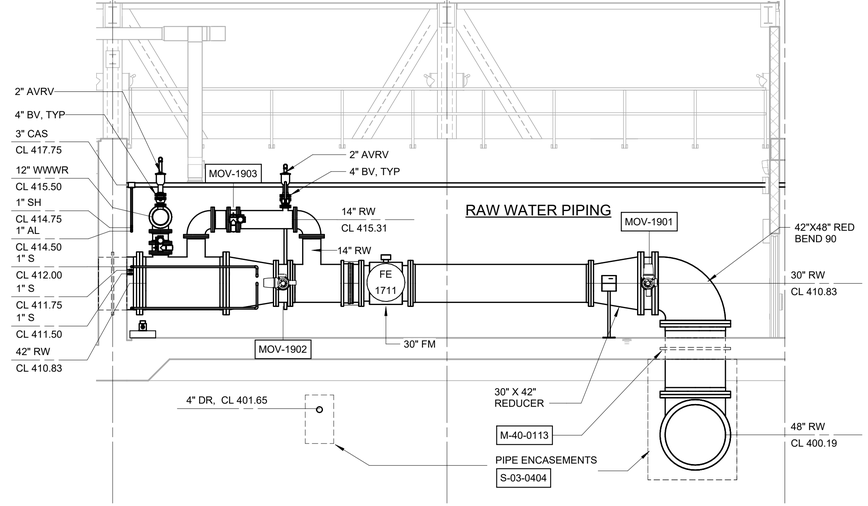

SECTION S
3/16" = 1'-0"
M-109

WARNING
IT IS A VIOLATION OF SECTION 7209.2 OF THE NEW YORK STATE EDUCATION LAW FOR ANY PERSON, UNLESS ACTING UNDER THE DIRECTION OF A LICENSED PROFESSIONAL ENGINEER, TO ALTER IN ANY WAY PLANS, SPECIFICATIONS, PLATS OR REPORTS TO WHICH THE SEAL OF A PROFESSIONAL ENGINEER HAS BEEN APPLIED. IF AN ITEM BEARING THE SEAL OF A PROFESSIONAL ENGINEER IS ALTERED, THE ALTERING ENGINEER SHALL AFFIX TO THE ITEM HIS SEAL AND THE NOTATION "ALTERED BY" FOLLOWED BY HIS SIGNATURE, THE DATE, AND A SPECIFIC DESCRIPTION OF THE ALTERATION.

3/16" = 1'-0"
6 4 2 0 5'

REV	ISSUED FOR	DATE	BY

PROJECT ENGINEER:	R. FROST
DESIGNED BY:	C. THORNTON
DRAWN BY:	B. CASULL
CHECKED BY:	E. FELDMAN
IF THIS BAR DOES NOT MEASURE 1" THEN DRAWING IS NOT TO FULL SCALE	0 1/2" 1"

BID SET

STATE OF NEW YORK · EILEEN M. McCARTHY · 085018 · LICENSED PROFESSIONAL ENGINEER

Hazen
HAZEN AND SAWYER
498 SEVENTH AVENUE, 11th FLOOR
NEW YORK, NEW YORK 10018

WESTCHESTER JOINT WATER WORKS
MAMARONECK, NY

RYE LAKE WATER FILTRATION PLANT
HARRISON, NY

FILTRATION PLANT
MECHANICAL
SECTIONS - SHEET 6

DATE:	FEB 2025
HAZEN NO.:	90388-000
CONTRACT NO.:	A1364-A
DRAWING NUMBER:	M-206

Autodesk Docs://90388-000_Rye_Lake_Filtration/90388-000-WFP-M.rvt
2/20/2025 1:06:36 AM

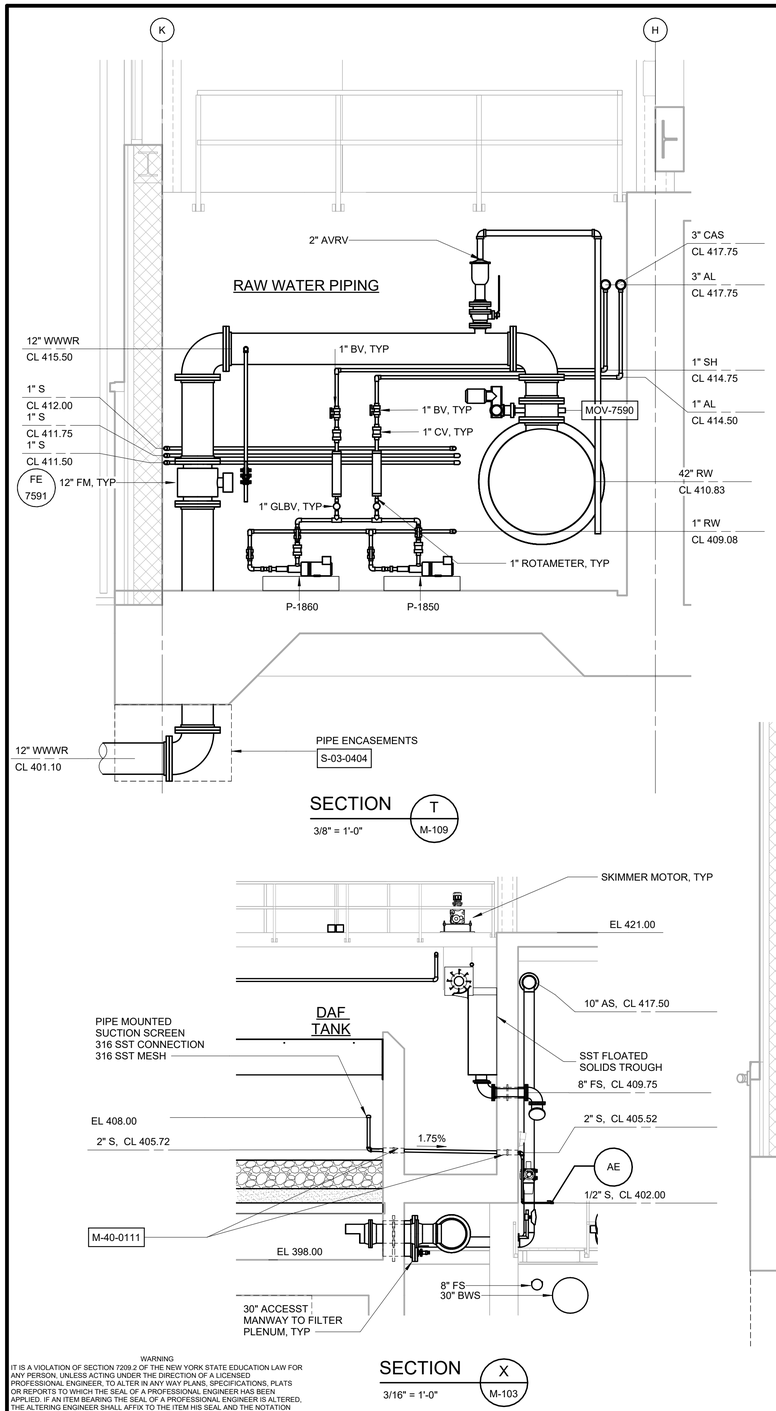

SECTION T
3/8" = 1'-0"
M-109

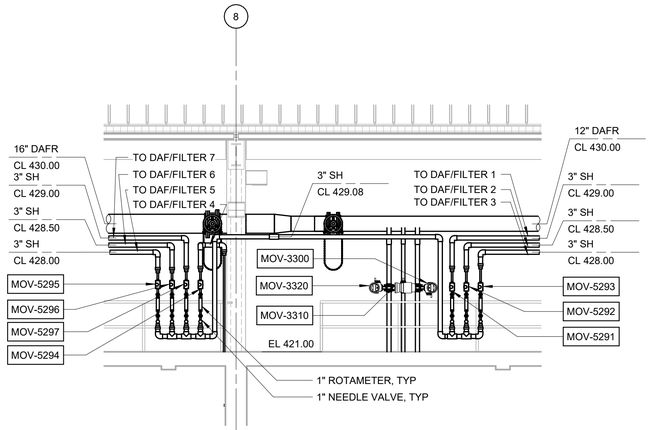

SECTION U
3/16" = 1'-0"
M-114

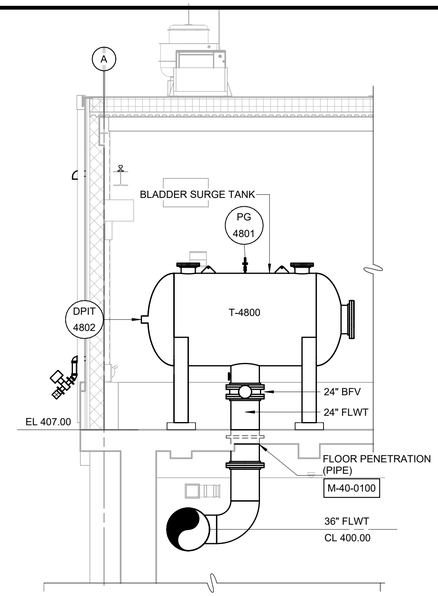

SECTION V
3/16" = 1'-0"
M-104

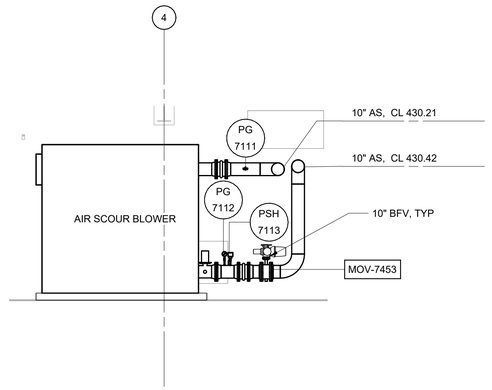

SECTION W
3/16" = 1'-0"
M-110

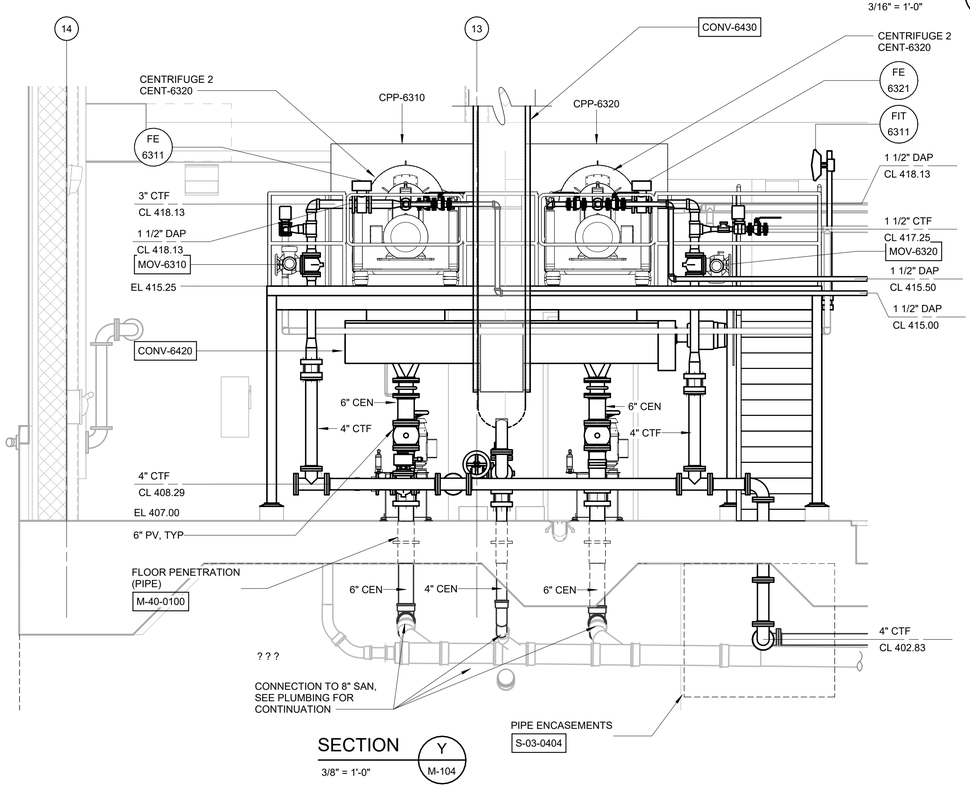

SECTION Y
3/8" = 1'-0"
M-104

SECTION X
3/16" = 1'-0"
M-103

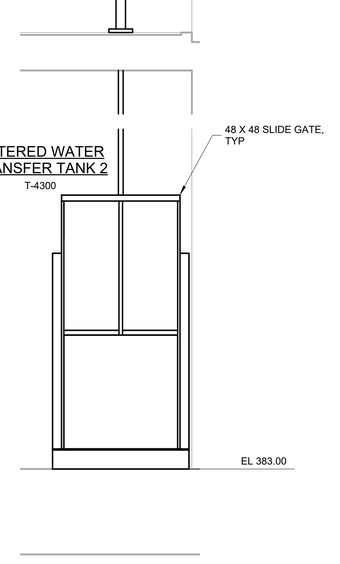

SECTION Z
3/8" = 1'-0"
M-102

3/8" = 1'-0"
3/16" = 1'-0"

WARNING
IT IS A VIOLATION OF SECTION 7209.2 OF THE NEW YORK STATE EDUCATION LAW FOR ANY PERSON, UNLESS ACTING UNDER THE DIRECTION OF A LICENSED PROFESSIONAL ENGINEER, TO ALTER IN ANY WAY PLANS, SPECIFICATIONS, PLATS OR REPORTS TO WHICH THE SEAL OF A PROFESSIONAL ENGINEER HAS BEEN APPLIED. IF AN ITEM BEARING THE SEAL OF A PROFESSIONAL ENGINEER IS ALTERED, THE ALTERING ENGINEER SHALL AFFIX TO THE ITEM HIS SEAL AND THE NOTATION "ALTERED BY" FOLLOWED BY HIS SIGNATURE, THE DATE, AND A SPECIFIC DESCRIPTION OF THE ALTERATION.

REV	ISSUED FOR	DATE	BY

PROJECT ENGINEER:	R. FROST
DESIGNED BY:	C. THORNTON
DRAWN BY:	B. CASULL
CHECKED BY:	E. FELDMAN

IF THIS BAR DOES NOT MEASURE 1" THEN DRAWING IS NOT TO FULL SCALE 0 1/2" 1"

BID SET

STATE OF NEW YORK · ELIZABETH A. McCARTHY · 085018 · LICENSED PROFESSIONAL ENGINEER

Hazen

HAZEN AND SAWYER
498 SEVENTH AVENUE, 11th FLOOR
NEW YORK, NEW YORK 10018

WESTCHESTER JOINT WATER WORKS
MAMARONECK, NY

RYE LAKE WATER FILTRATION PLANT
HARRISON, NY

FILTRATION PLANT
MECHANICAL
SECTIONS - SHEET 7

DATE:	FEB 2025
HAZEN NO.:	90388-000
CONTRACT NO.:	A1364-A
DRAWING NUMBER:	M-207

Autodesk Docs://90388-000_Rye_Lake_Filtration/90388-000-WFP-M.rvt
2/20/2025 1:06:42 AM

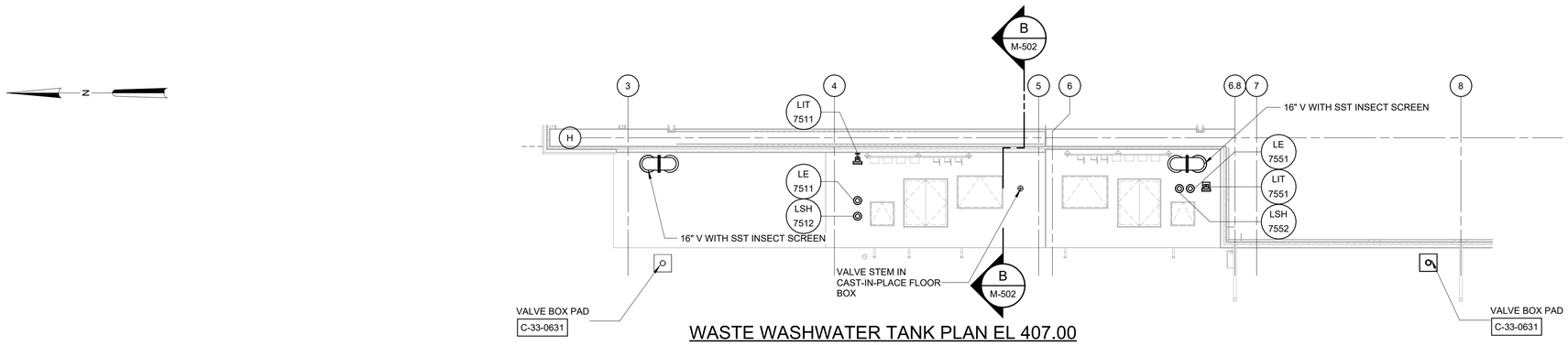

WASTE WASHWATER TANK PLAN EL 407.00

1/8" = 1'-0"

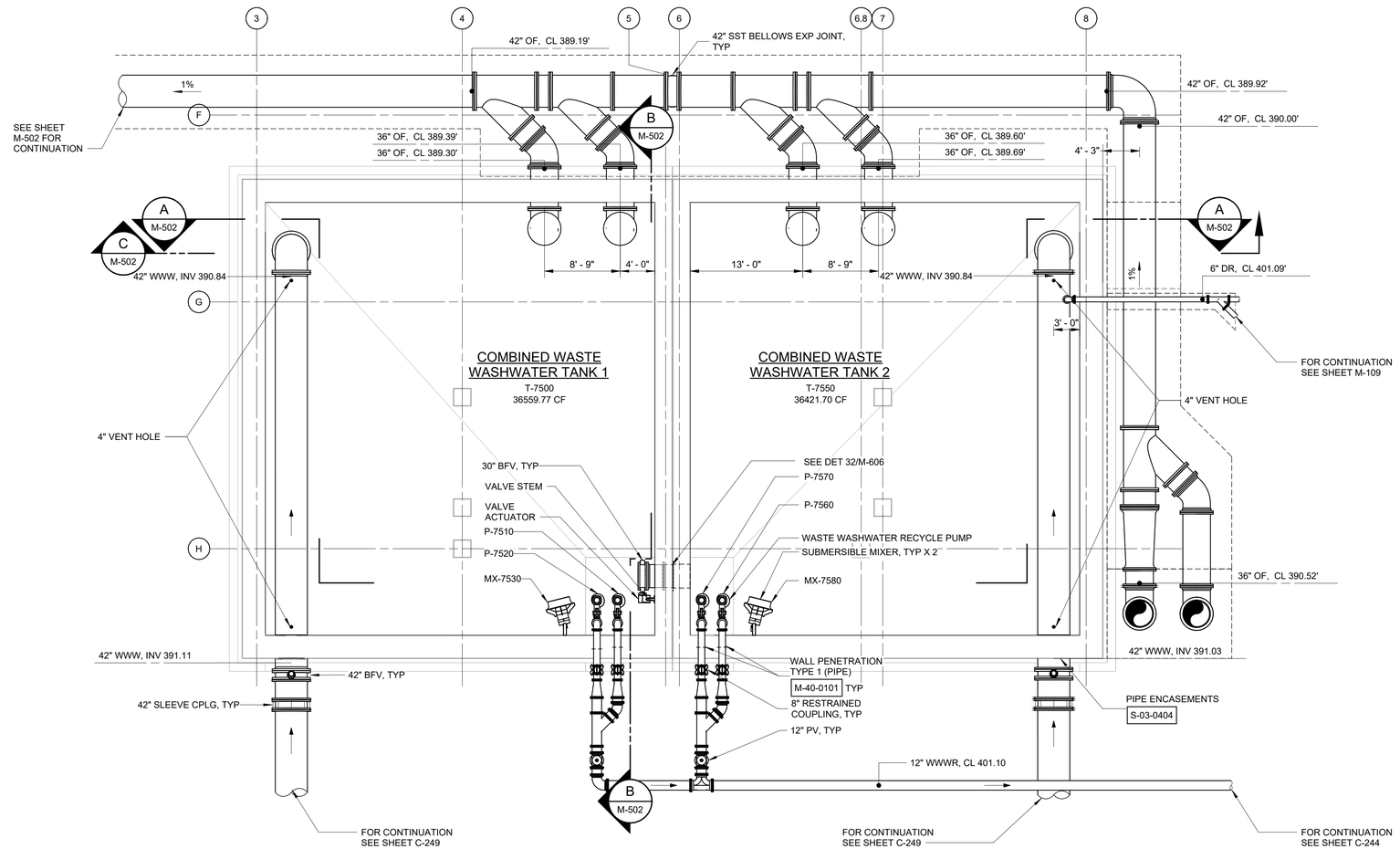

WASTE WASHWATER TANK PLAN EL 400.00

1/8" = 1'-0"

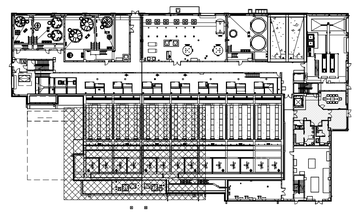

KEY PLAN

1/64" = 1'-0"

1/8" = 1'-0"

8 6 4 2 0 8'

WARNING
IT IS A VIOLATION OF SECTION 7209.2 OF THE NEW YORK STATE EDUCATION LAW FOR ANY PERSON, UNLESS ACTING UNDER THE DIRECTION OF A LICENSED PROFESSIONAL ENGINEER, TO ALTER IN ANY WAY PLANS, SPECIFICATIONS, PLATS OR REPORTS TO WHICH THE SEAL OF A PROFESSIONAL ENGINEER HAS BEEN APPLIED. IF AN ITEM BEARING THE SEAL OF A PROFESSIONAL ENGINEER IS ALTERED, THE ALTERING ENGINEER SHALL AFFIX TO THE ITEM HIS SEAL AND THE NOTATION "ALTERED BY" FOLLOWED BY HIS SIGNATURE, THE DATE, AND A SPECIFIC DESCRIPTION OF THE ALTERATION.

REV	ISSUED FOR	DATE	BY

PROJECT ENGINEER:	R. FROST
DESIGNED BY:	C. THORNTON
DRAWN BY:	B. CASULL
CHECKED BY:	E. FELDMAN
IF THIS BAR DOES NOT MEASURE 1" THEN DRAWING IS NOT TO FULL SCALE	0 1/2" 1"

BID SET

STATE OF NEW YORK · EDWARD J. McCARTHY FELDMAN · 085018 · LICENSED PROFESSIONAL ENGINEER

Hazen

HAZEN AND SAWYER
498 SEVENTH AVENUE, 11th FLOOR
NEW YORK, NEW YORK 10018

WESTCHESTER JOINT WATER WORKS
MAMARONECK, NY

RYE LAKE WATER FILTRATION PLANT
HARRISON, NY

WASTE WASHWATER TANK
MECHANICAL
PLANS

DATE:	FEB 2025
HAZEN NO.:	90388-000
CONTRACT NO.:	A1364-A
DRAWING NUMBER:	M-501

Autodesk Docs://90388-000_Rye_Lake_Filtration/90388-000-WFP-M.rvt
2/20/2025 1:06:55 AM

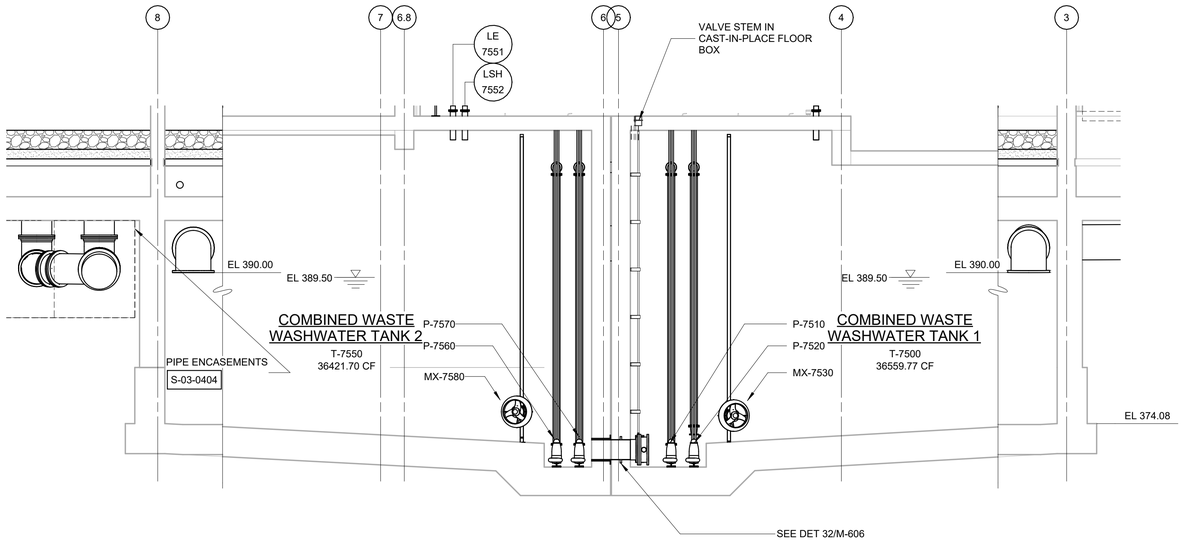

SECTION A
1/8" = 1'-0" M-501

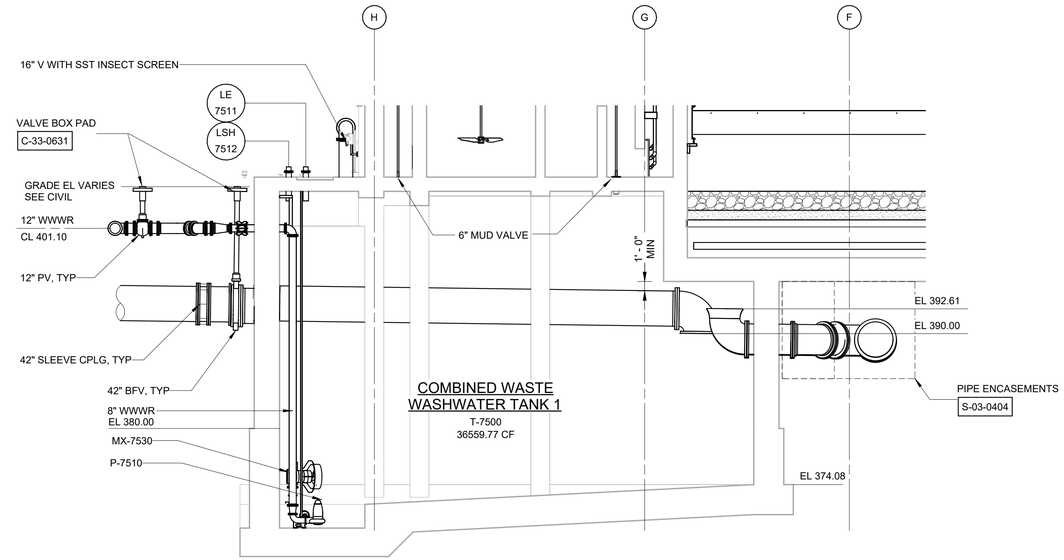

SECTION B
1/8" = 1'-0" M-501

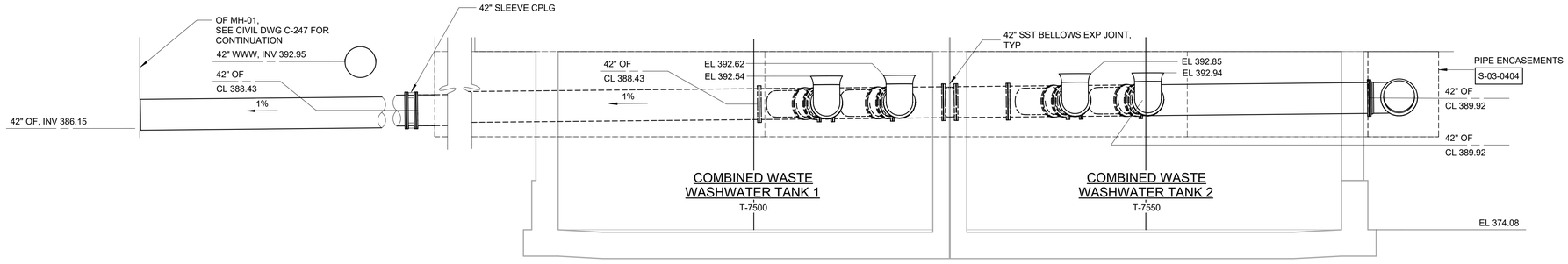

SECTION C
1/8" = 1'-0" M-501

WARNING
IT IS A VIOLATION OF SECTION 7209.2 OF THE NEW YORK STATE EDUCATION LAW FOR ANY PERSON, UNLESS ACTING UNDER THE DIRECTION OF A LICENSED PROFESSIONAL ENGINEER, TO ALTER IN ANY WAY PLANS, SPECIFICATIONS, PLATS OR REPORTS TO WHICH THE SEAL OF A PROFESSIONAL ENGINEER HAS BEEN APPLIED. IF AN ITEM BEARING THE SEAL OF A PROFESSIONAL ENGINEER IS ALTERED, THE ALTERING ENGINEER SHALL AFFIX TO THE ITEM HIS SEAL AND THE NOTATION "ALTERED BY" FOLLOWED BY HIS SIGNATURE, THE DATE, AND A SPECIFIC DESCRIPTION OF THE ALTERATION.

REV	ISSUED FOR	DATE	BY

PROJECT ENGINEER:	R. FROST
DESIGNED BY:	C. THORNTON
DRAWN BY:	B. CASULL
CHECKED BY:	E. FELDMAN

IF THIS BAR DOES NOT MEASURE 1" THEN DRAWING IS NOT TO FULL SCALE 0 1/2" 1"

BID SET

STATE OF NEW YORK · EDWARD J. McCARTHY FELDMAN · 085018 · LICENSED PROFESSIONAL ENGINEER

Hazen

HAZEN AND SAWYER
498 SEVENTH AVENUE, 11th FLOOR
NEW YORK, NEW YORK 10018

WESTCHESTER JOINT WATER WORKS
MAMARONECK, NY

RYE LAKE WATER FILTRATION PLANT
HARRISON, NY

WASTE WASHWATER TANK
MECHANICAL
SECTIONS

DATE:	FEB 2025
HAZEN NO.:	90388-000
CONTRACT NO.:	A1364-A
DRAWING NUMBER:	M-502

Autodesk Docs://90388-000_Rye_Lake_Filtration/90388-000-WFP-M.rvt
2/20/2025 1:07:01 AM

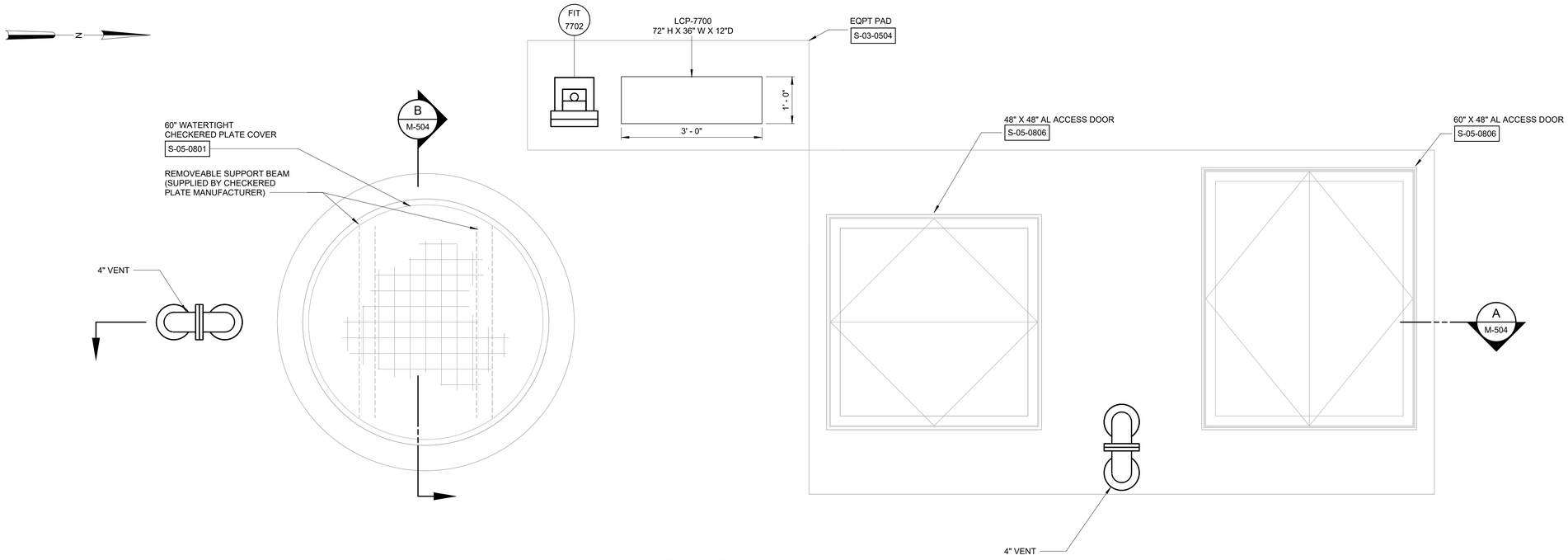

PLAN @ EL 406.50

3/4" = 1'-0"

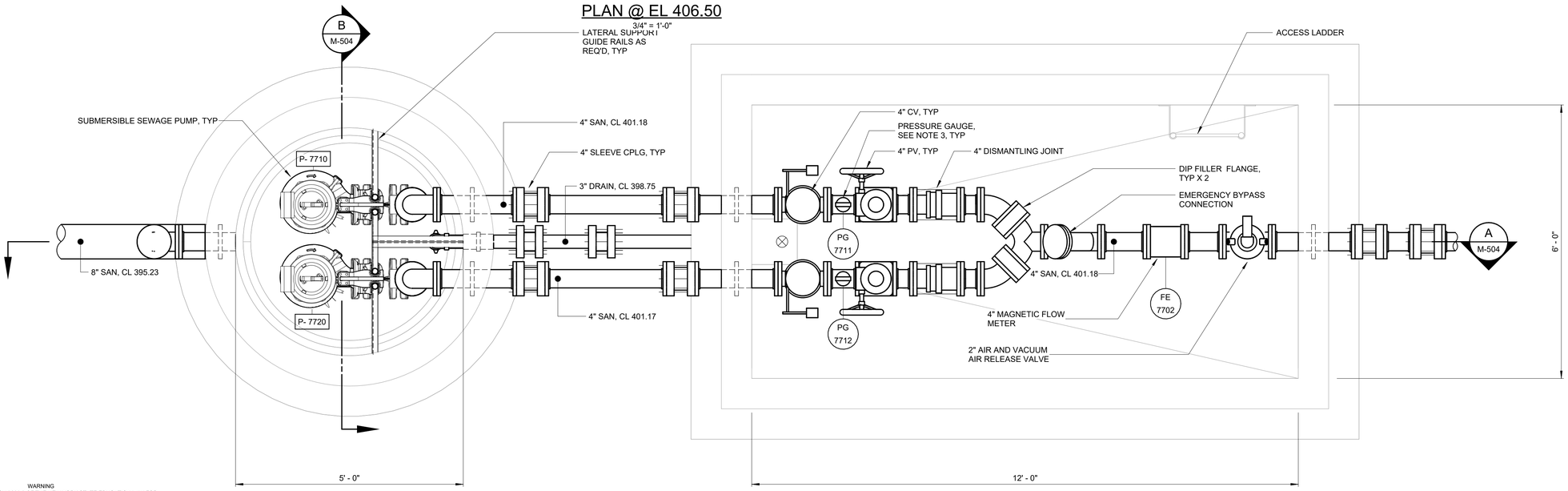

PLAN @ EL 402.00

3/4" = 1'-0"

NOTES:

1. CONTRACTOR SHALL REFERENCE CONTRACT SPECIFICATION SECTION 33 05 61 - UTILITY STRUCTURES AND SECTION 01 35 20 - CONFINED SPACE ENTRY FOR DESIGN REQUIREMENTS FOR PRECAST VAULTS. CONTRACTOR SHALL SUBMIT DESIGN CALCULATIONS AND DRAWINGS SIGNED AND SEALED BY A CURRENTLY REGISTERED PROFESSIONAL ENGINEER IN THE STATE OF NEW YORK. DESIGN CALCULATIONS SHALL INCLUDE CONFIRMATION STRUCTURES ADEQUATELY RESIST FLOTATION WHEN THEY ARE TOTALLY EMPTY AND SUBJECTED TO GROUNDWATER THE FULL HEIGHT OF THE STRUCTURE.
2. EXCAVATION SUPPORT SYSTEMS ARE NOT DEPICTED ON CONTRACT DRAWINGS. FULL EXTENT OF EXCAVATION SUPPORT REQUIRED TO PERFORM CONSTRUCTION IS THE EXCLUSIVE RESPONSIBILITY OF THE CONTRACTOR.
3. SEE INSRUMENTATION DRAWINGS.
4. CONTRACTOR SHALL NOT INSTALL ANY EQUIPMENT, CONDUIT, PIPE AND OTHER OBSTRUCTIONS ABOVE SANITARY PUMP STATION WET WELL AND DRY WELL ACCESS OPENINGS TO MAINTAIN OVERHEAD CLEARANCE FOR EQUIPMENT INSTALLATION AND REMOVAL.
5. SANITARY PUMP STATION WET WELL IS CLASSIFIED AS CLASS 1, DIVISION 1, GROUP D. SANITARY PUMP STATION DRY WELL IS CLASSIFIED AS CLASS 1, DIVISION 2, GROUP D. ALL EQUIPMENT IN SANITARY PUMP STATION WET WELL AND DRY WELL SHALL BE RATED FOR CLASS 1, DIVISION 1, GROUP D.
6. PROVIDE 3 TYPE H-3 SIGNS FOR THE SANITARY PUMP STATION, SEE ARCHITECTURAL DRAWINGS.

WARNING
IT IS A VIOLATION OF SECTION 7209.2 OF THE NEW YORK STATE EDUCATION LAW FOR ANY PERSON, UNLESS ACTING UNDER THE DIRECTION OF A LICENSED PROFESSIONAL ENGINEER, TO ALTER IN ANY WAY PLANS, SPECIFICATIONS, PLATS OR REPORTS TO WHICH THE SEAL OF A PROFESSIONAL ENGINEER HAS BEEN APPLIED. IF AN ITEM BEARING THE SEAL OF A PROFESSIONAL ENGINEER IS ALTERED, THE ALTERING ENGINEER SHALL AFFIX TO THE ITEM HIS SEAL AND THE NOTATION "ALTERED BY" FOLLOWED BY HIS SIGNATURE, THE DATE, AND A SPECIFIC DESCRIPTION OF THE ALTERATION.

3/4" = 1'-0" 6" 0 1 2'

REV	ISSUED FOR	DATE	BY

PROJECT ENGINEER:	R. FROST
DESIGNED BY:	M. BECZEK
DRAWN BY:	B. CASULL
CHECKED BY:	E. FELDMAN

IF THIS BAR DOES NOT MEASURE 1" THEN DRAWING IS NOT TO FULL SCALE 0 1/2" 1"

BID SET



Hazen

HAZEN AND SAWYER
498 SEVENTH AVENUE, 11th FLOOR
NEW YORK, NEW YORK 10018

WESTCHESTER JOINT WATER WORKS
MAMARONECK, NY

RYE LAKE WATER FILTRATION PLANT
HARRISON, NY

SANITARY PUMP STATION
MECHANICAL
PLANS

DATE:	FEB 2025
HAZEN NO.:	90388-000
CONTRACT NO.:	A1364-A
DRAWING NUMBER:	M-503

Autodesk Docs://90388-000_Rye_Lake_Filtration/90388-000-PS-M.rvt
2/6/2025 10:13:38 AM

NOTES:

1. CONTRACTOR SHALL REFERENCE CONTRACT SPECIFICATION SECTION 33 05 61 - UTILITY STRUCTURES AND SECTION 01 35 20 - CONFINED SPACE ENTRY FOR DESIGN REQUIREMENTS FOR PRECAST VAULTS. CONTRACTOR SHALL SUBMIT DESIGN CALCULATIONS AND DRAWINGS SIGNED AND SEALED BY A CURRENTLY REGISTERED PROFESSIONAL ENGINEER IN THE STATE OF NEW YORK. DESIGN CALCULATIONS SHALL INCLUDE CONFIRMATION STRUCTURES ADEQUATELY RESIST FLOTATION WHEN THEY ARE TOTALLY EMPTY AND SUBJECTED TO GROUNDWATER THE FULL HEIGHT OF THE STRUCTURE.
2. EXCAVATION SUPPORT SYSTEMS ARE NOT DEPICTED ON CONTRACT DRAWINGS. FULL EXTENT OF EXCAVATION SUPPORT REQUIRED TO PERFORM CONSTRUCTION IS THE EXCLUSIVE RESPONSIBILITY OF THE CONTRACTOR.
3. SEE INSRUMENTATION DRAWINGS.
4. CONTRACTOR SHALL NOT INSTALL ANY EQUIPMENT, CONDUIT, PIPE AND OTHER OBSTRUCTIONS ABOVE SANITARY PUMP STATION WET WELL AND DRY WELL ACCESS OPENINGS TO MAINTAIN OVERHEAD CLEARANCE FOR EQUIPMENT INSTALLATION AND REMOVAL.
5. SANITARY PUMP STATION WET WELL IS CLASSIFIED AS CLASS 1, DIVISION 1, GROUP D. SANITARY PUMP STATION DRY WELL IS CLASSIFIED AS CLASS 1, DIVISION 2, GROUP D. ALL EQUIPMENT IN SANITARY PUMP STATION WET WELL AND DRY WELL SHALL BE RATED FOR CLASS 1, DIVISION 1, GROUP D.
6. PROVIDE 3 TYPE H-3 SIGNS FOR THE SANITARY PUMP STATION, SEE ARCHITECTURAL DRAWINGS.

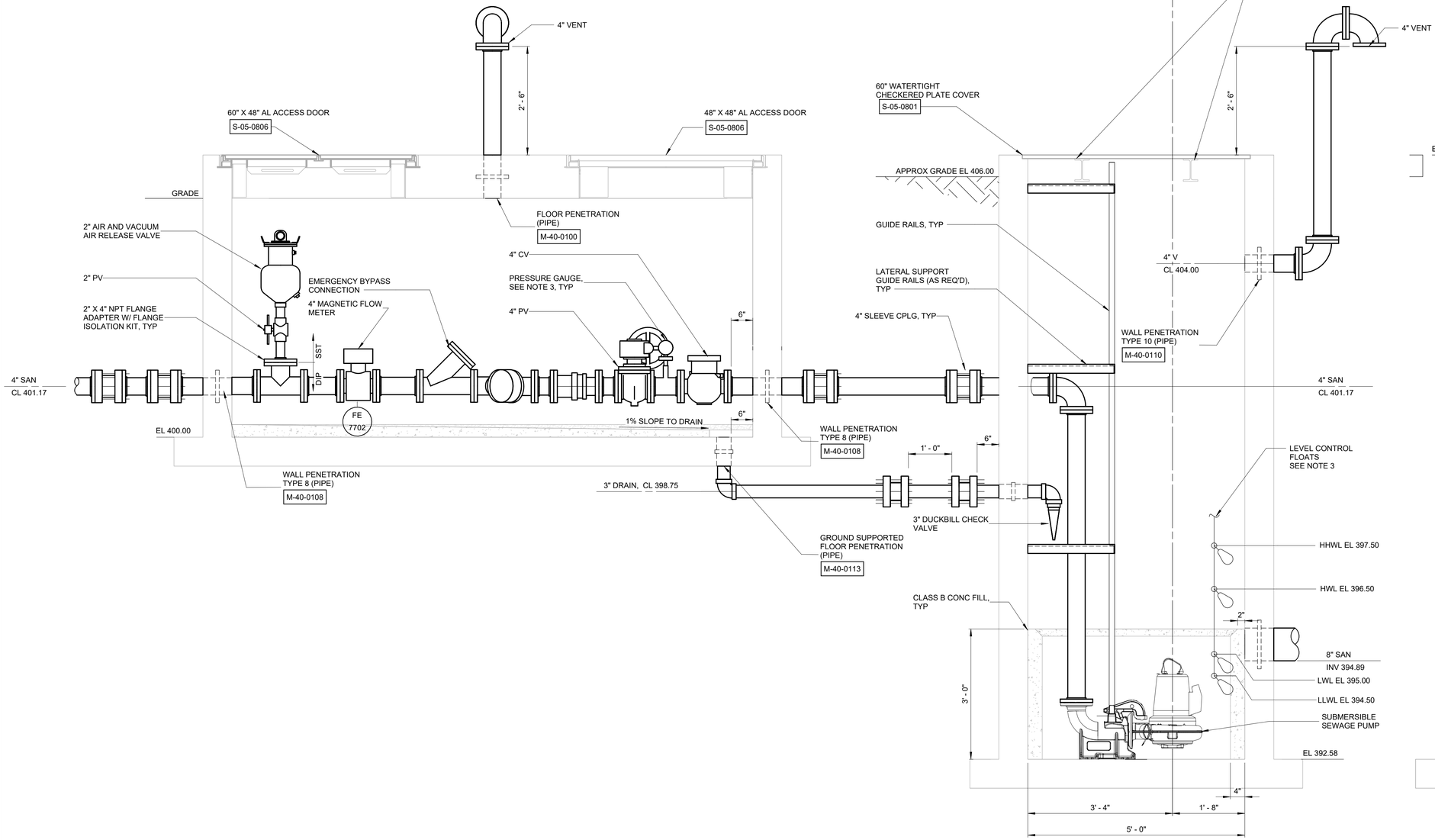

SECTION A
3/4" = 1'-0"
M-503

SECTION B
3/4" = 1'-0"
M-503

3/4" = 1'-0"
6" 0 1 2'

WARNING
IT IS A VIOLATION OF SECTION 7209.2 OF THE NEW YORK STATE EDUCATION LAW FOR ANY PERSON, UNLESS ACTING UNDER THE DIRECTION OF A LICENSED PROFESSIONAL ENGINEER, TO ALTER IN ANY WAY PLANS, SPECIFICATIONS, PLATS OR REPORTS TO WHICH THE SEAL OF A PROFESSIONAL ENGINEER HAS BEEN APPLIED. IF AN ITEM BEARING THE SEAL OF A PROFESSIONAL ENGINEER IS ALTERED, THE ALTERING ENGINEER SHALL AFFIX TO THE ITEM HIS SEAL AND THE NOTATION "ALTERED BY" FOLLOWED BY HIS SIGNATURE, THE DATE, AND A SPECIFIC DESCRIPTION OF THE ALTERATION.

REV	ISSUED FOR	DATE	BY

PROJECT ENGINEER:	R. FROST
DESIGNED BY:	M. BECZEK
DRAWN BY:	B. CASULL
CHECKED BY:	E. FELDMAN
IF THIS BAR DOES NOT MEASURE 1" THEN DRAWING IS NOT TO FULL SCALE	0 1/2" 1"

BID SET

STATE OF NEW YORK · EILEEN M. McCARTHY FELDMAN · 085018 · LICENSED PROFESSIONAL ENGINEER

Hazen

HAZEN AND SAWYER
498 SEVENTH AVENUE, 11th FLOOR
NEW YORK, NEW YORK 10018

WESTCHESTER JOINT WATER WORKS
MAMARONECK, NY

RYE LAKE WATER FILTRATION PLANT
HARRISON, NY

SANITARY PUMP STATION
MECHANICAL
SECTIONS

DATE:	FEB 2025
HAZEN NO.:	90388-000
CONTRACT NO.:	A1364-A
DRAWING NUMBER:	M-504

Autodesk Docs://90388-000_Rye_Lake_Filtration/90388-000-PS-M.rvt
2/6/2025 10:13:50 AM

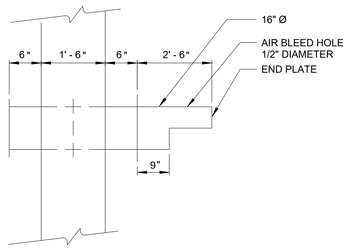

16 INCH FILTER EFFLUENT PIPE

DETAIL	1
NTS	M-201

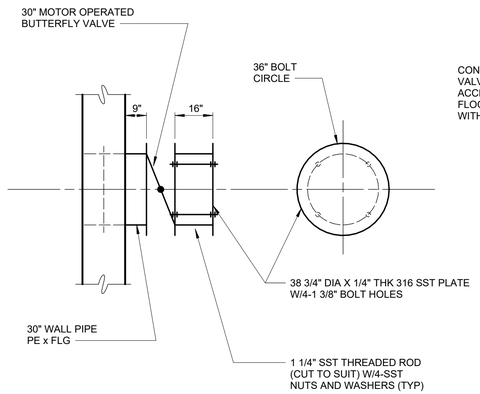

30 INCH BUTTERFLY VALVE W/ BAFFLE

DETAIL	2
NTS	M-201

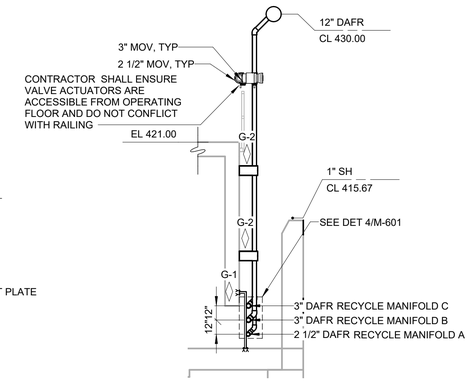

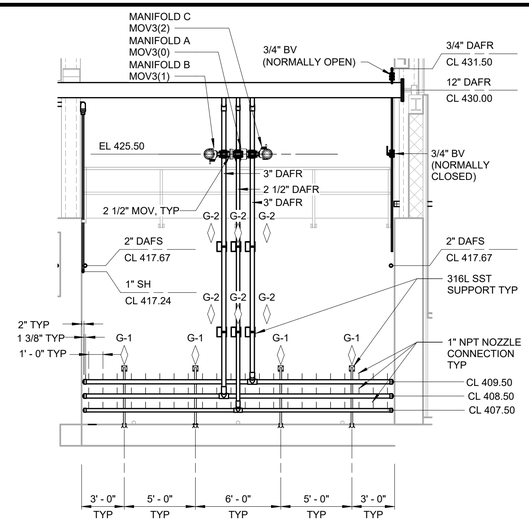

TYPICAL DAF INJECTION HEADER

DETAIL	3
NTS	M-201

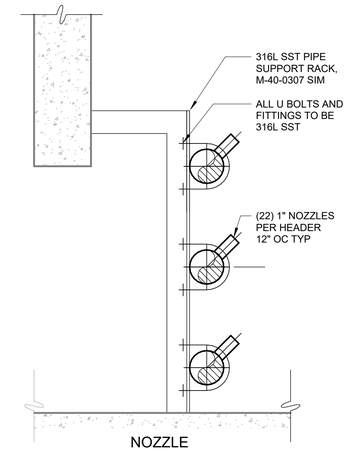

NOZZLE

DETAIL	4
NTS	M-601

RESIDUAL STORAGE MIXING AND DEWATERING FEED ISOMETRIC

DETAIL	5
NTS	M-102

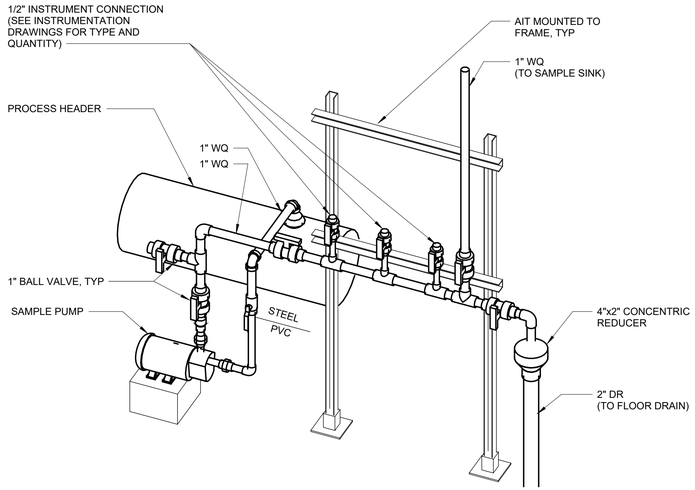

WATER QUALITY HEADER

DETAIL	6
NTS	M-109

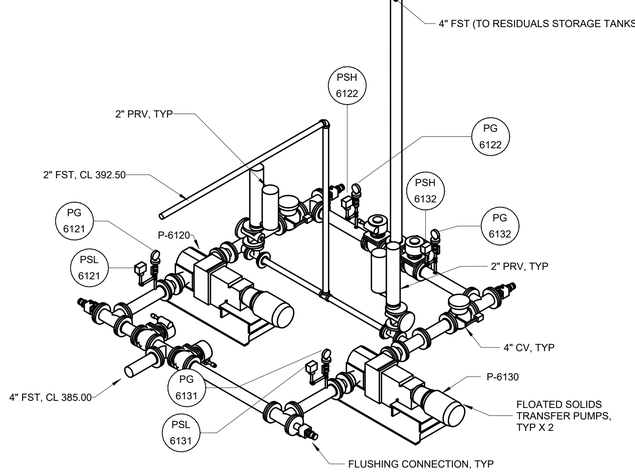

SOLIDS TRANSFER PUMPS ISOMETRIC

DETAIL	7
NTS	M-102

WARNING
IT IS A VIOLATION OF SECTION 7209.2 OF THE NEW YORK STATE EDUCATION LAW FOR ANY PERSON, UNLESS ACTING UNDER THE DIRECTION OF A LICENSED PROFESSIONAL ENGINEER, TO ALTER IN ANY WAY PLANS, SPECIFICATIONS, PLATS OR REPORTS TO WHICH THE SEAL OF A PROFESSIONAL ENGINEER HAS BEEN APPLIED. IF AN ITEM BEARING THE SEAL OF A PROFESSIONAL ENGINEER IS ALTERED, THE ALTERING ENGINEER SHALL AFFIX TO THE ITEM HIS SEAL AND THE NOTATION "ALTERED BY" FOLLOWED BY HIS SIGNATURE, THE DATE, AND A SPECIFIC DESCRIPTION OF THE ALTERATION.

REV	ISSUED FOR	DATE	BY

PROJECT ENGINEER:	R. FROST
DESIGNED BY:	C. THORNTON
DRAWN BY:	B. CASULL
CHECKED BY:	E. FELDMAN
IF THIS BAR DOES NOT MEASURE 1" THEN DRAWING IS NOT TO FULL SCALE	0 1/2" 1"

BID SET



Hazen
HAZEN AND SAWYER
498 SEVENTH AVENUE, 11th FLOOR
NEW YORK, NEW YORK 10018

WESTCHESTER JOINT WATER WORKS
MAMARONECK, NY

RYE LAKE WATER FILTRATION PLANT
HARRISON, NY

MECHANICAL
DETAILS - SHEET 1

DATE:	FEB 2025
HAZEN NO.:	90388-000
CONTRACT NO.:	A1364-A
DRAWING NUMBER:	M-601

Autodesk Docs://90388-000_Rye_Lake_Filtration/90388-000-WFP-MJ.rvt
2/20/2025 1:07:18 AM

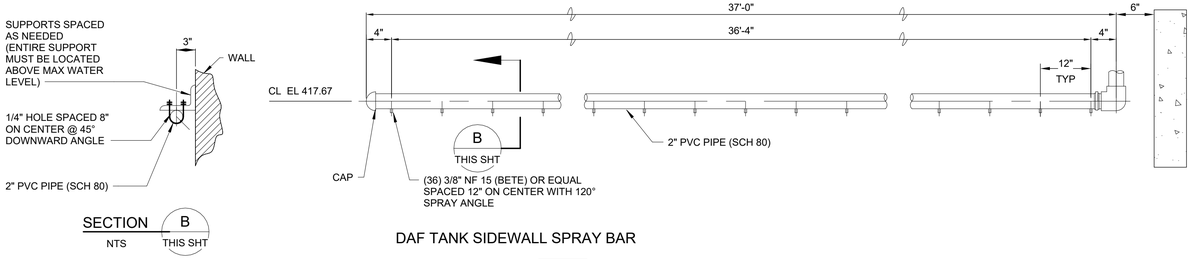

DAF TANK SIDEWALL SPRAY BAR

DETAIL	8
NTS	M-602

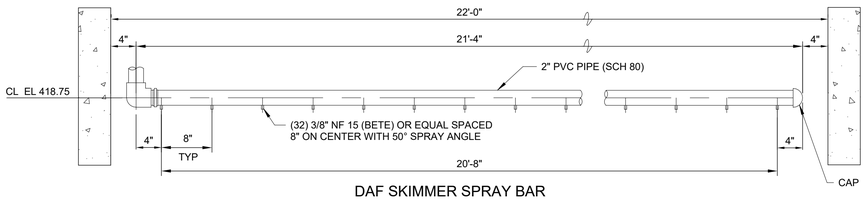

DAF SKIMMER SPRAY BAR

DETAIL	9
NTS	M-602

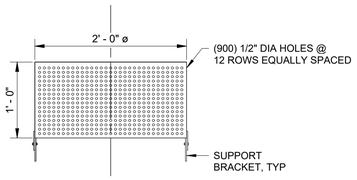

SATURATOR OUTLET SCREEN

DETAIL	11
1" = 1'-0"	M-602

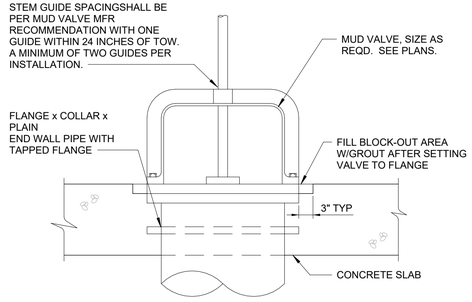

MUD VALVE INSTALLATION

DETAIL	12
NTS	M-109

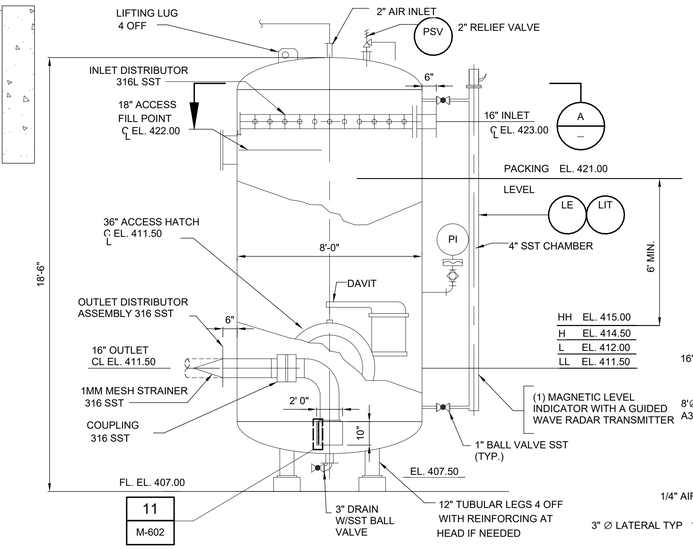

11
M-602

NOTES:

1. COLLECTION STRAINER SUPPORT SHALL BE PROVIDED BY MANUFACTURER.
2. OPERATING ELEVATIONS SHOWN ARE INITAL SETPOINTS. ACTUAL OPERATING SETPOINTS TO BE COORDINATED WITH SATURATOR SUBMITTAL AND TO BE FIELD ADJUSTED.
3. CONTRACTOR SHALL COORDINATE LEVEL INDICATOR NOZZLE ELEVATIONS AND LOCATIONS WITH SATURATOR MANUFACTURER AND LEVEL INSTRUMENT MANUFACTURER.

SECTION THROUGH TANK

LATERAL NO.	NO. OF HOLES	LENGTH (IN.)	NO. REQ'D.	TOTAL NO. OF HOLES
1	5	13.5	4	20
2	8	22.5	4	32
3	10	28.5	4	40
4	12	34.5	8	96
5	13	37.5	2	26
				214

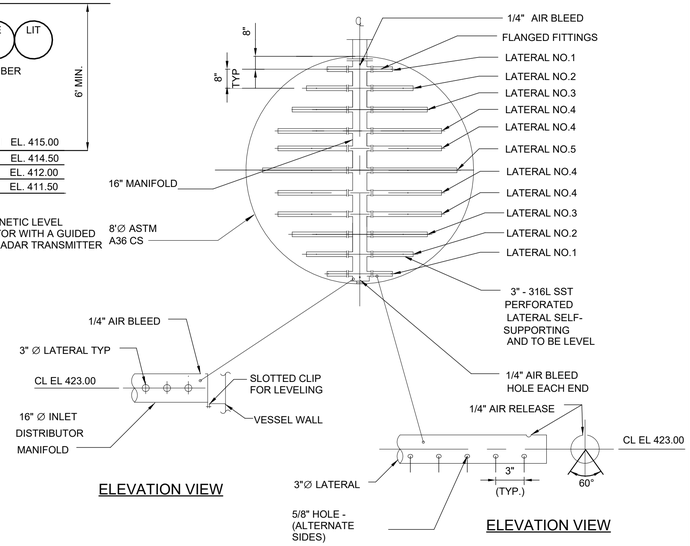

ELEVATION VIEW

ELEVATION VIEW

SATURATOR DETAIL

DETAIL	10
NTS	M-106

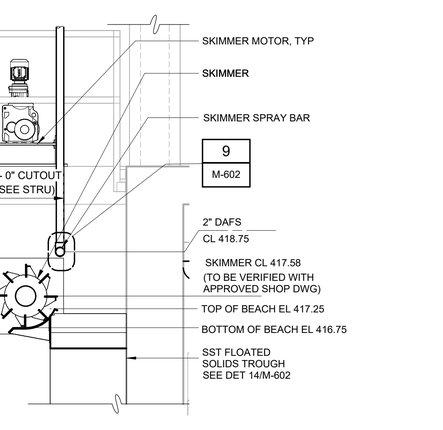

DAF SPRAY BAR AND FLOATED SOLIDS SKIMMER SPRAY BAR

DETAIL	13
1/2" = 1'-0"	M-201

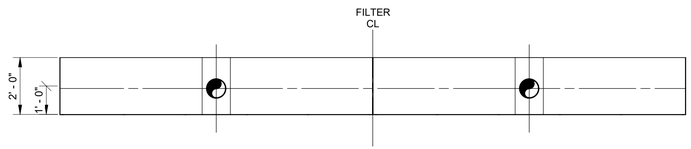

PLAN VIEW

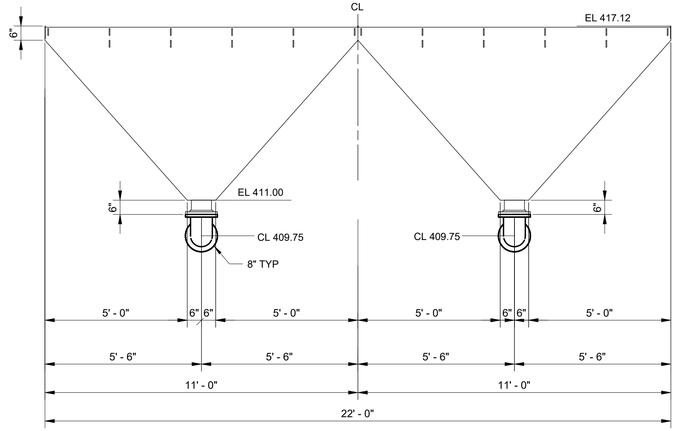

FRONT VIEW

FLOATED TROUGH DETAILS (TYPICAL FOR EACH FILTER)

DETAIL	14
NTS	M-113

WARNING
IT IS A VIOLATION OF SECTION 7209.2 OF THE NEW YORK STATE EDUCATION LAW FOR ANY PERSON, UNLESS ACTING UNDER THE DIRECTION OF A LICENSED PROFESSIONAL ENGINEER, TO ALTER IN ANY WAY PLANS, SPECIFICATIONS, PLATS OR REPORTS TO WHICH THE SEAL OF A PROFESSIONAL ENGINEER HAS BEEN APPLIED. IF AN ITEM BEARING THE SEAL OF A PROFESSIONAL ENGINEER IS ALTERED, THE ALTERING ENGINEER SHALL AFFIX TO THE ITEM HIS SEAL AND THE NOTATION "ALTERED BY" FOLLOWED BY HIS SIGNATURE, THE DATE, AND A SPECIFIC DESCRIPTION OF THE ALTERATION.

REV	ISSUED FOR	DATE	BY
1	Revision 1	Date 1	

PROJECT ENGINEER:	R. FROST
DESIGNED BY:	C. THORNTON
DRAWN BY:	B. CASULL
CHECKED BY:	E. FELDMAN

IF THIS BAR DOES NOT MEASURE 1" THEN DRAWING IS NOT TO FULL SCALE (0, 1/2", 1")

BID SET

STATE OF NEW YORK · E. T. McCARTHY · 085018 · LICENSED PROFESSIONAL ENGINEER

Hazen

HAZEN AND SAWYER
498 SEVENTH AVENUE, 11th FLOOR
NEW YORK, NEW YORK 10018

WESTCHESTER JOINT WATER WORKS
MAMARONECK, NY

RYE LAKE WATER FILTRATION PLANT
HARRISON, NY

MECHANICAL
DETAILS - SHEET 2

DATE:	FEB 2025
HAZEN NO.:	90388-000
CONTRACT NO.:	A1364-A
DRAWING NUMBER:	M-602

Autodesk Docs://90388-000_Rye_Lake_Filtration/90388-000-WFP-M.rvt
2/20/2025 1:07:23 AM

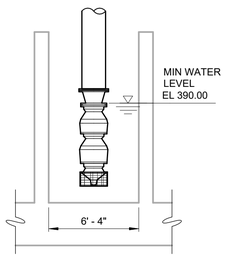

SECTION A-A

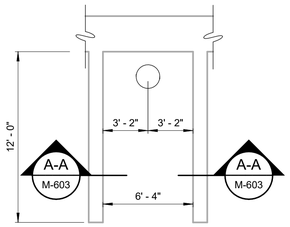

BAY WALL DETAIL

DETAIL	15
NTS	M-101

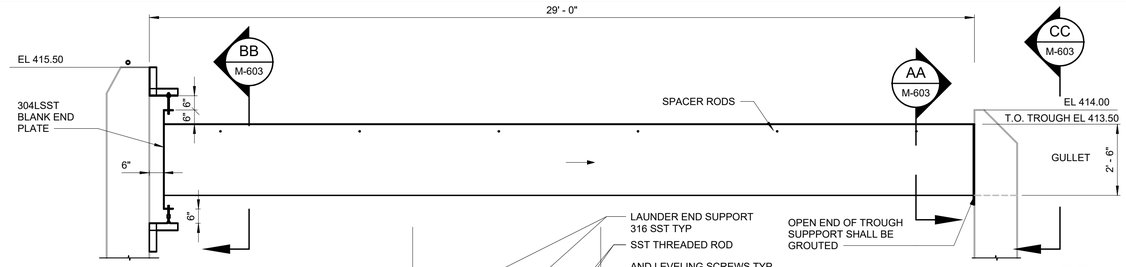

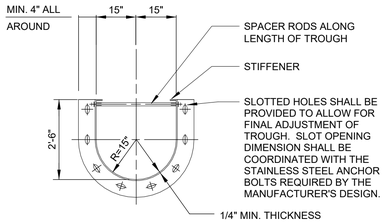

SECTION AA

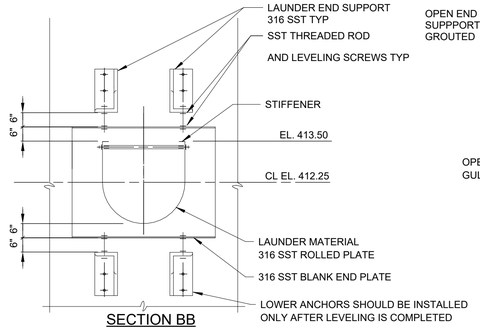

SECTION BB

FILTER TROUGH DETAIL

DETAIL	16
NTS	M-201

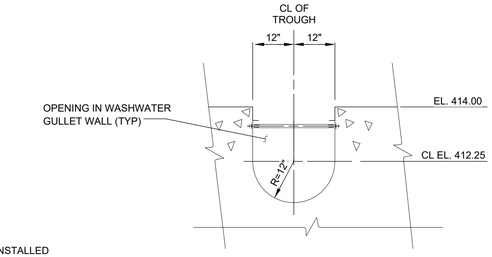

SECTION CC

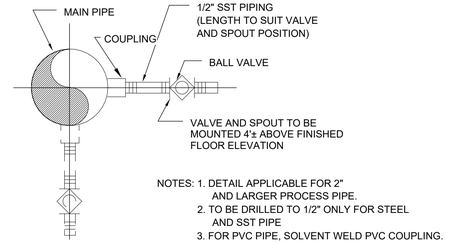

NOTES: 1. DETAIL APPLICABLE FOR 2"
AND LARGER PROCESS PIPE.
2. TO BE DRILLED TO 1/2" ONLY FOR STEEL
AND SST PIPE
3. FOR PVC PIPE, SOLVENT WELD PVC COUPLING.

SAMPLE TAP DETAIL
(MATERIAL SAME AS MAIN PIPE)

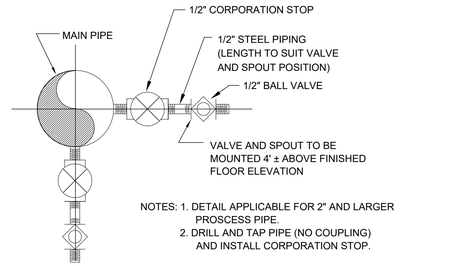

NOTES: 1. DETAIL APPLICABLE FOR 2" AND LARGER
PROSCESS PIPE.
2. DRILL AND TAP PIPE (NO COUPLING)
AND INSTALL CORPORATION STOP.

SAMPLE TAP DETAIL
(DUCTILE IRON PIPE)

DETAIL	18
NTS	

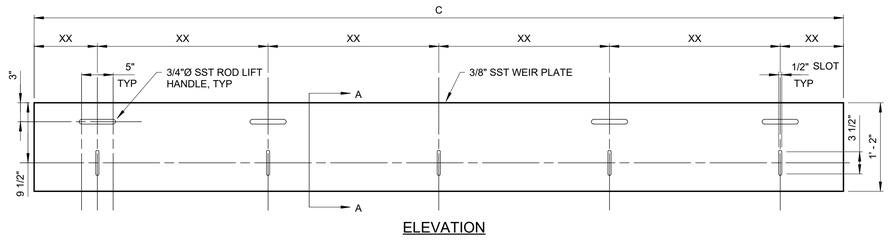

ELEVATION

WEIR PLATE SCHEDULE				
LOCATION	QTY	A	B	C
BACKWASH TANK INLET WEIR	1	EL 401.42	EL 401.17	21'
FILTERED WATER TRANSFER TANK 1	1	EL 401.42	EL 401.17	21'
FILTERED WATER TRANSFER TANK 2	1	EL 401.42	EL 401.17	21'
BACKWASH AND FWT TANK 1 OVERFLOW	1	EL 402.50	EL 402.25	21'
FWT TANK 2 OVERFLOW	1	EL 402.50	EL 402.25	20' 9"

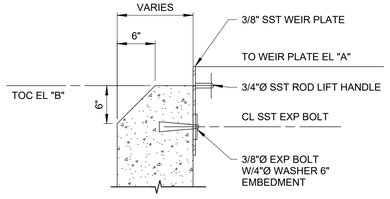

SECTION A-A

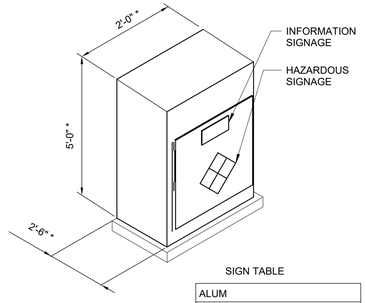

SIGN TABLE
ALUM
COAGULANT AID POLYMER
SODIUM HYDROXIDE
SODIUM HYPOCHLORITE
HYDROFLUOSILICIC ACID
CORROSION INHIBITOR

ENCLOSURE NOTES:

1. PROVIDE:
(1) ONE CUSTOM 1" INSULATED CABINET WITH FIBERGLASS INTERIOR AND EXTERIOR FACES. FOR SODIUM HYDROXIDE AND SODIUM HYPOCHLORITE

(1) CUSTOM 1" INSULATED CABINET WITH FIBERGLASS INTERIOR AND EXTERIOR FACES FOR ALUM AND COAGULANT AID POLYMER.

(1) ONE INSULATED POLYPROPYLENE CABINET FOR HYDROFLUOSILICIC ACID.

(1) ONE INSULATED POLYPROPYLENE CABINET FOR CORROSION INHIBITOR.

CABINETS SHALL BE PROVIDED WITH CUTOUTS TO ACCOMMODATE PIPING AS REQUIRED. ATTACH UNIT WITH HASTELLOY C BOLTS TO ENCLOSURE PAD. PROVIDE DOORS WITH WEATHERSEALS AND STAINLESS STEEL LATCH AND HINGES. LATCH SHALL BE LOCKABLE.

* DIMENSION VARIES AND SHALL BE COORDINATED WITH PIPING SUBMITTALS

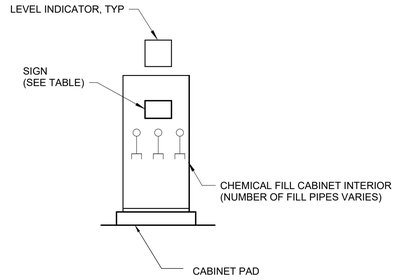

CHEMICAL FILL CABINET DETAILS

NOTES:

1. ALL 2" FILL LINE TO SLOPE 1/8"/FT FROM HIGH POINT TO STORAGE TANK.
2. ALL NECESSARY PROTECTIVE SAFETY EQUIPMENT (FACE SHIELD, GLOVES, APRON ETC.) AND SAFETY PROCEDURES SHALL BE IMPLEMENTED IN THE FILL AREA.
3. CHEMICAL FILL CABINET - PROVIDE CHEMICAL FILL SHELTER SECURED TO CONCRETE SLAB WITH ADHESIVE ANCHORS AND TIGHT AGAINST BUILDING (NO ANCHORS IN BUILDING). PROVIDE METAL FLASHING ALONG ALL THREE SIDES OF STORAGE CABINET AT THE BUILDING AND PROVIDE BOND BREAKER TO SIDES AND ALONG BASE OF THE FILL CABINETS.
4. FRP CHEMICAL FILL CABINETS TO BE MANUFACTURED BY WARMINSTER FIBERGLASS, OR EQUAL.
5. EACH FILL CABINET SHALL BE PROVIDED WITH A LEAK SENSOR, TANK LEVEL DISPLAY, OVERFILL ALARM HORN, AND STROBE.
6. PENETRATIONS CUT IN FLOOR OF CHEMICAL FILL CABINETS FOR ANCHORS, CONDUIT, ETC. SHALL BE RESEALED WITH POURABLE JOINT FILLER, SIKA PRODUCT COMPATIBLE WITH EACH CHEMICAL.
7. PENETRATIONS CUT IN BACK FOR PIPES SHALL BE SEALED WITH SIKA CAULK.

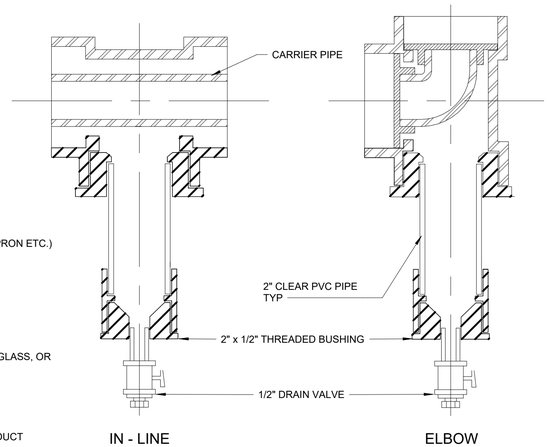

VISUAL LEAK DETECTION STATION

DETAIL	17
NTS	

DETAIL	19
NTS	

DETAIL	20
NTS	

WARNING
IT IS A VIOLATION OF SECTION 7209.2 OF THE NEW YORK STATE EDUCATION LAW FOR ANY PERSON, UNLESS ACTING UNDER THE DIRECTION OF A LICENSED PROFESSIONAL ENGINEER, TO ALTER IN ANY WAY PLANS, SPECIFICATIONS, PLATS OR REPORTS TO WHICH THE SEAL OF A PROFESSIONAL ENGINEER HAS BEEN APPLIED. IF AN ITEM BEARING THE SEAL OF A PROFESSIONAL ENGINEER IS ALTERED, THE ALTERING ENGINEER SHALL AFFIX TO THE ITEM HIS SEAL AND THE NOTATION "ALTERED BY" FOLLOWED BY HIS SIGNATURE, THE DATE, AND A SPECIFIC DESCRIPTION OF THE ALTERATION.

REV	ISSUED FOR	DATE	BY

PROJECT ENGINEER:	R. FROST
DESIGNED BY:	C. THORNTON
DRAWN BY:	B. CASULL
CHECKED BY:	E. FELDMAN

IF THIS BAR DOES NOT MEASURE 1" THEN DRAWING IS NOT TO FULL SCALE 0 1/2" 1"

BID SET

STATE OF NEW YORK · McCARTHY · 085018 · LICENSED PROFESSIONAL ENGINEER

Hazen

HAZEN AND SAWYER
498 SEVENTH AVENUE, 11th FLOOR
NEW YORK, NEW YORK 10018

WESTCHESTER JOINT WATER WORKS
MAMARONECK, NY

RYE LAKE WATER FILTRATION PLANT
HARRISON, NY

MECHANICAL
DETAILS - SHEET 3

DATE:	FEB 2025
HAZEN NO.:	90388-000
CONTRACT NO.:	A1364-A
DRAWING NUMBER:	M-603

Autodesk Docs://90388-000_Rye_Lake_Filtration/90388-000-WFP-M.rvt
2/20/2025 1:07:26 AM

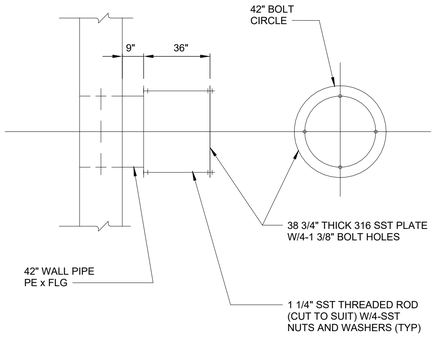

30" INCH BUTTERFLY VALVE W/ BAFFLE

DETAIL 21

NTS

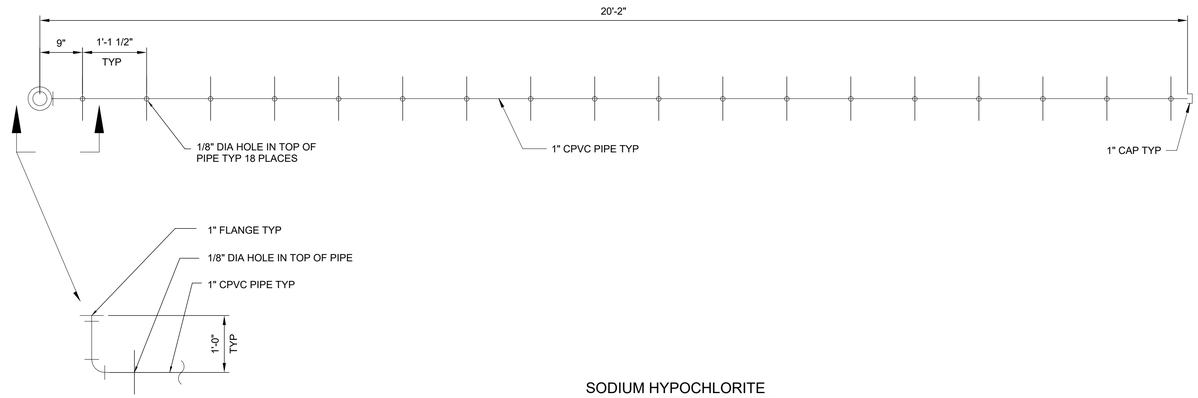

SODIUM HYPOCHLORITE PRE-FILTER FEED SPARGER

DETAIL 22

NTS

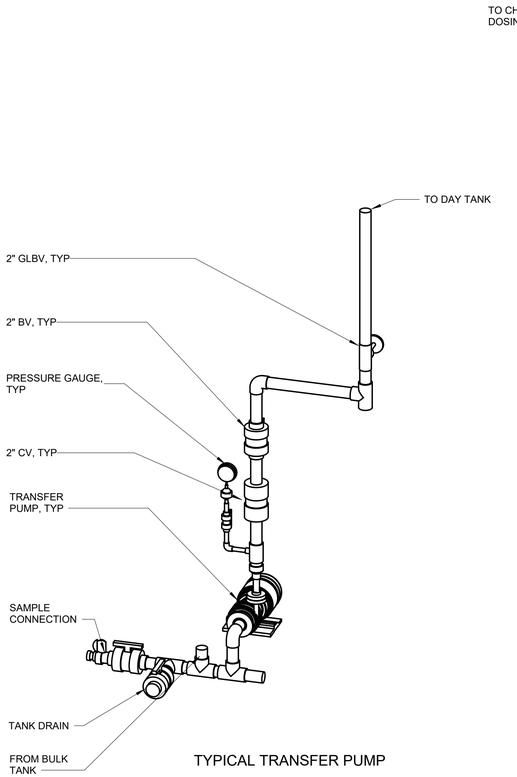

TYPICAL TRANSFER PUMP

DETAIL 23

NTS

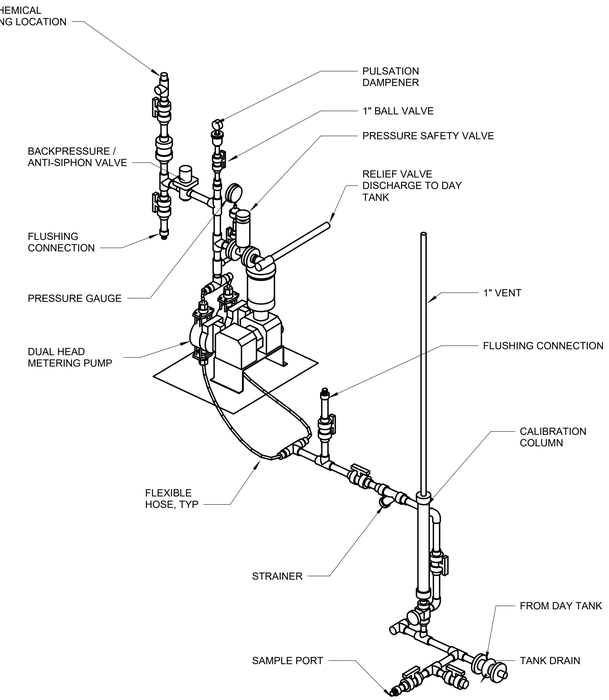

TYPICAL METERING PUMP

DETAIL 24

NTS

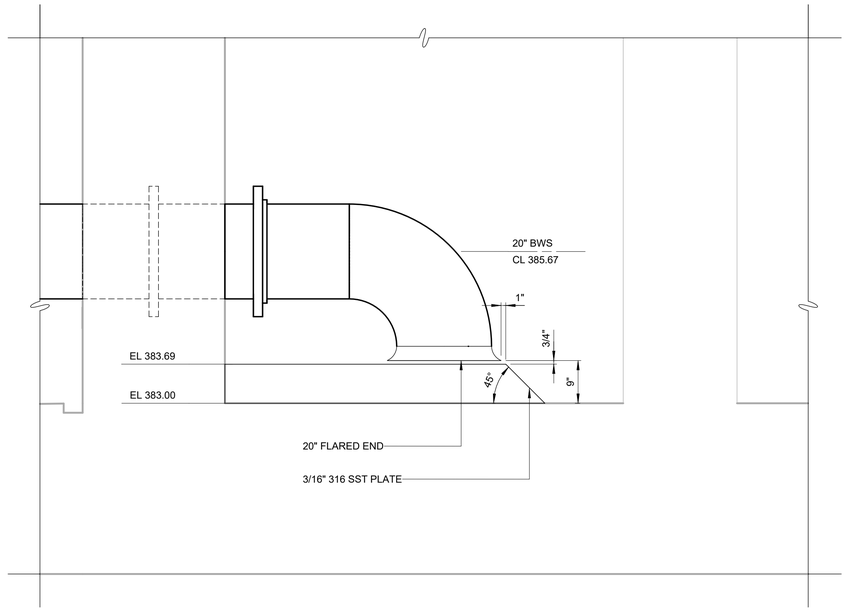

VORTEX SUPPRESSION FLOOR SPLITTER PLATE

DETAIL 25

NTS M-101

WARNING
IT IS A VIOLATION OF SECTION 7209.2 OF THE NEW YORK STATE EDUCATION LAW FOR ANY PERSON, UNLESS ACTING UNDER THE DIRECTION OF A LICENSED PROFESSIONAL ENGINEER, TO ALTER IN ANY WAY PLANS, SPECIFICATIONS, PLATS OR REPORTS TO WHICH THE SEAL OF A PROFESSIONAL ENGINEER HAS BEEN APPLIED. IF AN ITEM BEARING THE SEAL OF A PROFESSIONAL ENGINEER IS ALTERED, THE ALTERING ENGINEER SHALL AFFIX TO THE ITEM HIS SEAL AND THE NOTATION "ALTERED BY" FOLLOWED BY HIS SIGNATURE, THE DATE, AND A SPECIFIC DESCRIPTION OF THE ALTERATION.

REV	ISSUED FOR	DATE	BY

PROJECT ENGINEER:	R. FROST
DESIGNED BY:	C. THORNTON
DRAWN BY:	B. CASULL
CHECKED BY:	E. FELDMAN

IF THIS BAR DOES NOT MEASURE 1" THEN DRAWING IS NOT TO FULL SCALE 0 1/2" 1"

BID SET

STATE OF NEW YORK · EDWARD T. McCARTHY · 085018 · LICENSED PROFESSIONAL ENGINEER

Hazen

HAZEN AND SAWYER
498 SEVENTH AVENUE, 11th FLOOR
NEW YORK, NEW YORK 10018

WESTCHESTER JOINT WATER WORKS
MAMARONECK, NY

RYE LAKE WATER FILTRATION PLANT
HARRISON, NY

MECHANICAL
DETAILS - SHEET 4

DATE:	FEB 2025
HAZEN NO.:	90388-000
CONTRACT NO.:	A1364-A
DRAWING NUMBER:	M-604

Autodesk Docs://90388-000_Rye_Lake_Filtration/90388-000-WFP-M.rvt
2/20/2025 1:07:29 AM

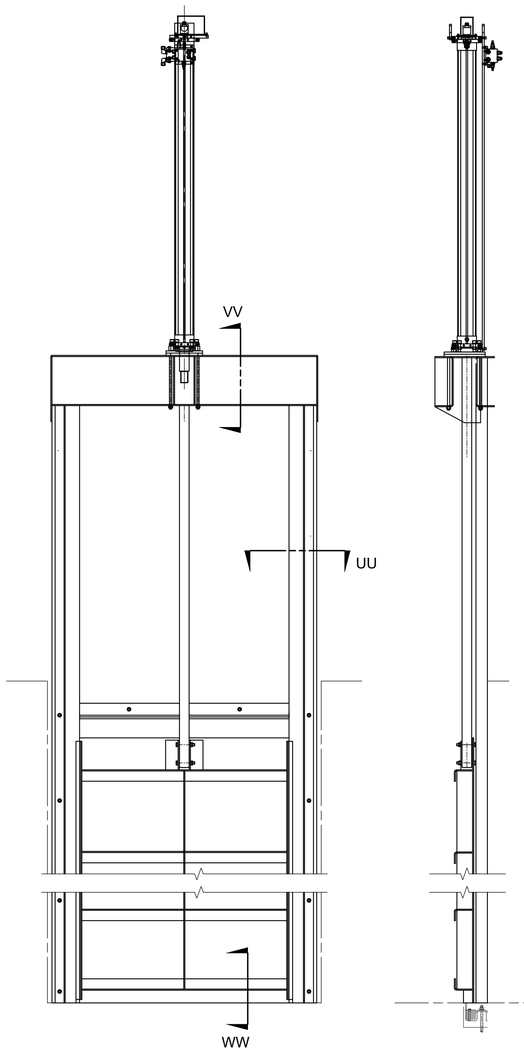

ELEVATION

SECTION

NOTES:

1. SEE SPECIFICATION SECTION 40 05 59.05 FOR SCHEDULE OF GATE DIMENSIONS.
2. DIMENSIONS OF ANCHOR BOLTS SHALL BE COORDINATED WITH SLIDE GATE MANUFACTURER.

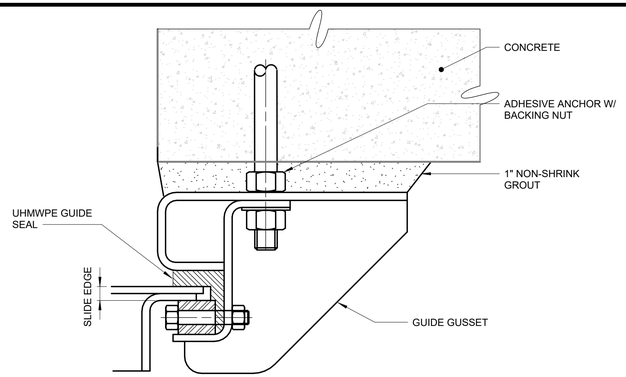

GATE GUIDE SECTION

SECTION UU

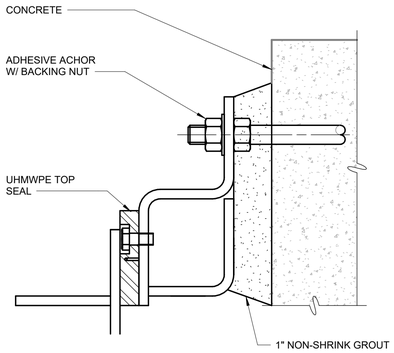

GATE WALL MOUNTED TOP SEAL SECTION

SECTION VV

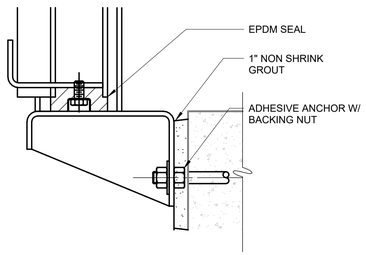

GATE BOTTOM SEAL

SECTION WW

SLIDE GATE DETAIL

DETAIL	26
NTS	

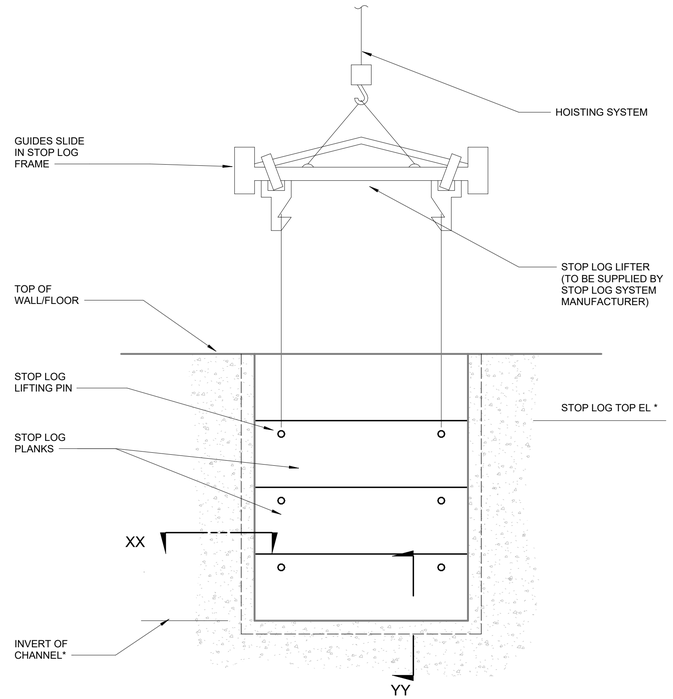

* SEE DRAWINGS/SPECIFICATIONS FOR ELEVATION

STOP LOG ELEVATION

NOTES:
1. DIMENSIONS OF ANY NECESSARY ANCHOR BOLTS AND BOX-OUT REQUIRED SHALL BE COORDINATED WITH STOP LOG MANUFACTURER.

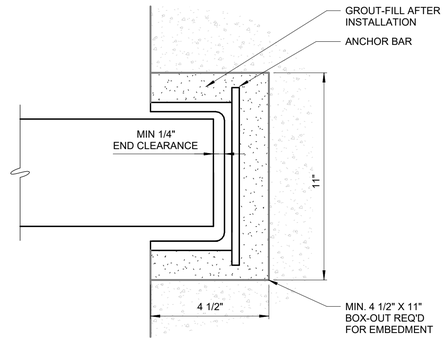

STOP LOG EMBEDDED GROOVE SECTION

SECTION XX

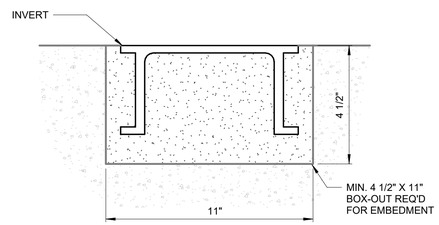

STOP LOG EMBEDDED INVERT SECTION AND BOTTOM SEAL

SECTION YY

STOP LOG SYSTEM

DETAIL	27
NTS	

WARNING
IT IS A VIOLATION OF SECTION 7209.2 OF THE NEW YORK STATE EDUCATION LAW FOR ANY PERSON, UNLESS ACTING UNDER THE DIRECTION OF A LICENSED PROFESSIONAL ENGINEER, TO ALTER IN ANY WAY PLANS, SPECIFICATIONS, PLATS OR REPORTS TO WHICH THE SEAL OF A PROFESSIONAL ENGINEER HAS BEEN APPLIED. IF AN ITEM BEARING THE SEAL OF A PROFESSIONAL ENGINEER IS ALTERED, THE ALTERING ENGINEER SHALL AFFIX TO THE ITEM HIS SEAL AND THE NOTATION "ALTERED BY" FOLLOWED BY HIS SIGNATURE, THE DATE, AND A SPECIFIC DESCRIPTION OF THE ALTERATION.

REV	ISSUED FOR	DATE	BY

PROJECT ENGINEER:	R. FROST
DESIGNED BY:	C. THORNTON
DRAWN BY:	B. CASULL
CHECKED BY:	E. FELDMAN
IF THIS BAR DOES NOT MEASURE 1" THEN DRAWING IS NOT TO FULL SCALE	0 1/2" 1"

BID SET

STATE OF NEW YORK · McCARTHY · ERIC · 085018 · LICENSED PROFESSIONAL ENGINEER

Hazen

HAZEN AND SAWYER
498 SEVENTH AVENUE, 11th FLOOR
NEW YORK, NEW YORK 10018

WESTCHESTER JOINT WATER WORKS
MAMARONECK, NY

RYE LAKE WATER FILTRATION PLANT
HARRISON, NY

MECHANICAL
DETAILS - SHEET 5

DATE:	FEB 2025
HAZEN NO.:	90388-000
CONTRACT NO.:	A1364-A
DRAWING NUMBER:	M-605

Autodesk Docs://90388-000_Rye_Lake_Filtration/90388-000-WFP-M.rvt
2/20/2025 1:07:29 AM

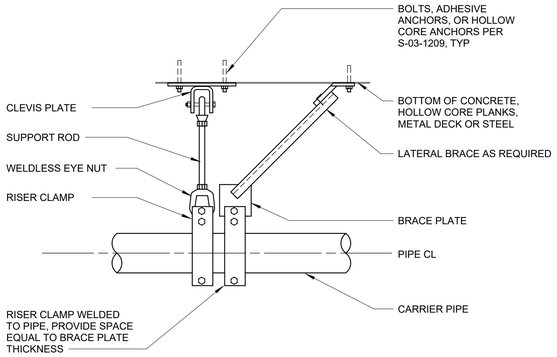

BRACED PIPE HANGER

DETAIL	28
NTS	

ELBOW REMOVAL SEQUENCE:

1. DISASSEMBLE ELBOW
2. LOWER SADDLE USING SCREW
3. REMOVE U-BOLTS
4. REMOVE ELBOW

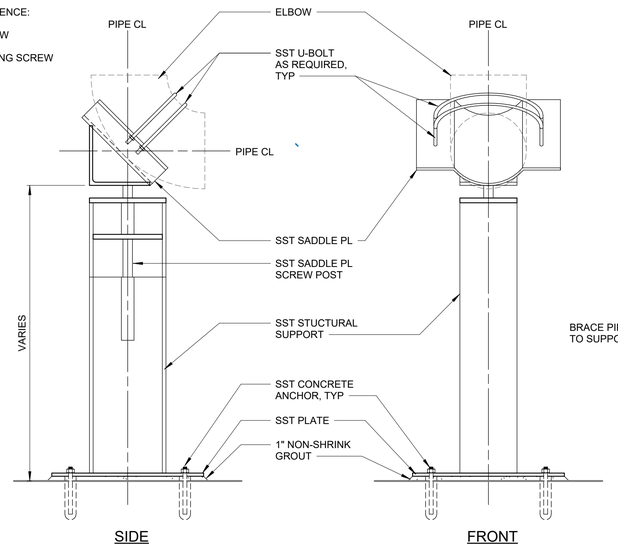

REMOVABLE ELBOW SUPPORT

DETAIL	29
NTS	

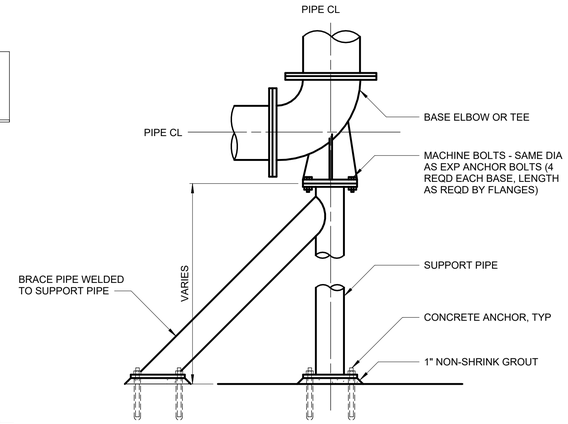

BASE ELBOW SUPPORT

DETAIL	30
NTS	

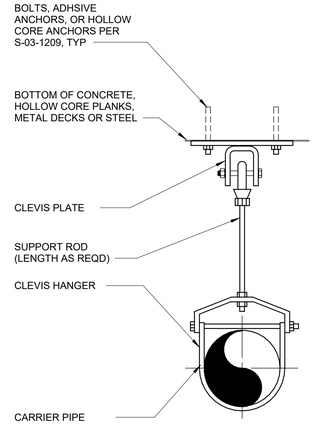

HANGER ATTACHED TO BEAM

DETAIL	31
NTS	

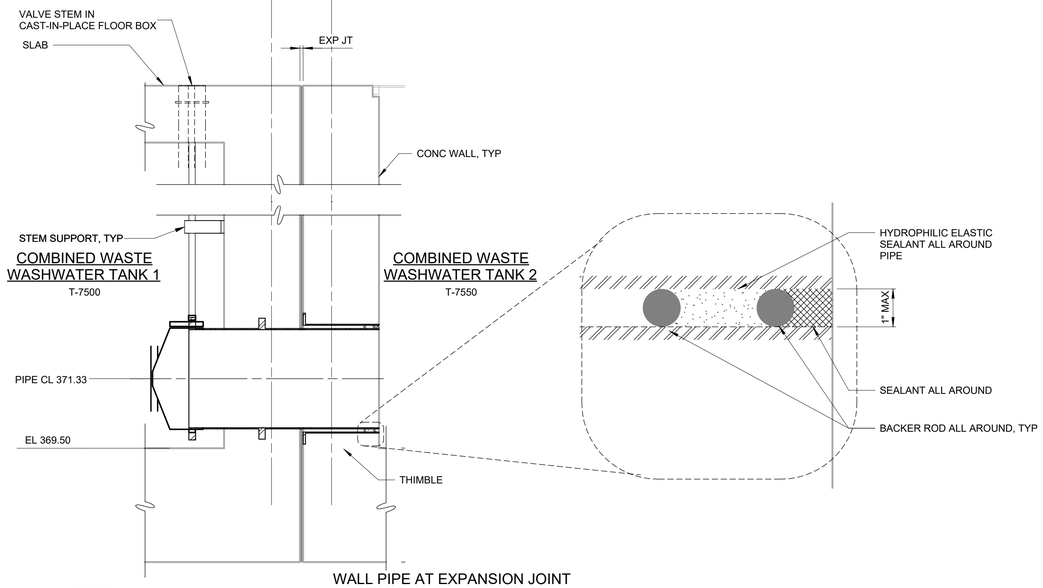

WALL PIPE AT EXPANSION JOINT

DETAIL	32
NTS	M-501

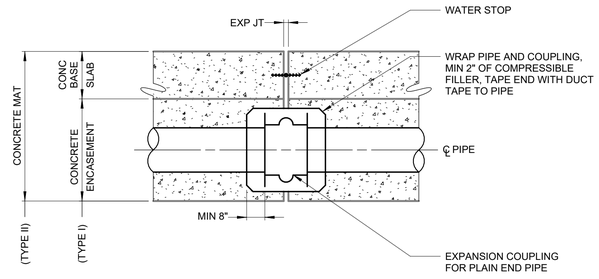

BURIED PIPE EXPANSION JOINT
W/ CONC ENCASEMENT (TYPE I)
OR IN CONCRETE MAT (TYPE II)

DETAIL	33
NTS	

WARNING
IT IS A VIOLATION OF SECTION 7209.2 OF THE NEW YORK STATE EDUCATION LAW FOR ANY PERSON, UNLESS ACTING UNDER THE DIRECTION OF A LICENSED PROFESSIONAL ENGINEER, TO ALTER IN ANY WAY PLANS, SPECIFICATIONS, PLATS OR REPORTS TO WHICH THE SEAL OF A PROFESSIONAL ENGINEER HAS BEEN APPLIED. IF AN ITEM BEARING THE SEAL OF A PROFESSIONAL ENGINEER IS ALTERED, THE ALTERING ENGINEER SHALL AFFIX TO THE ITEM HIS SEAL AND THE NOTATION "ALTERED BY" FOLLOWED BY HIS SIGNATURE, THE DATE, AND A SPECIFIC DESCRIPTION OF THE ALTERATION.

REV	ISSUED FOR	DATE	BY

PROJECT ENGINEER:	R. FROST
DESIGNED BY:	C. THORNTON
DRAWN BY:	B. CASULL
CHECKED BY:	E. FELDMAN

IF THIS BAR DOES NOT MEASURE 1" THEN DRAWING IS NOT TO FULL SCALE — 0 1/2" 1"

BID SET

STATE OF NEW YORK · EILEEN McCARTHY FELDMAN · 085018 · LICENSED PROFESSIONAL ENGINEER

Hazen
HAZEN AND SAWYER
498 SEVENTH AVENUE, 11th FLOOR
NEW YORK, NEW YORK 10018

WESTCHESTER JOINT WATER WORKS
MAMARONECK, NY

RYE LAKE WATER FILTRATION PLANT
HARRISON, NY

MECHANICAL
DETAILS - SHEET 6

DATE:	FEB 2025
HAZEN NO.:	90388-000
CONTRACT NO.:	A1364-A
DRAWING NUMBER:	M-606

Autodesk Docs://90388-000_Rye_Lake_Filtration/90388-000-WFP-M.rvt
2/20/2025 1:07:31 AM

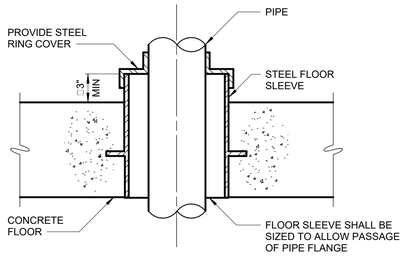

ELEVATED FLOOR PENETRATION

M-40-0100

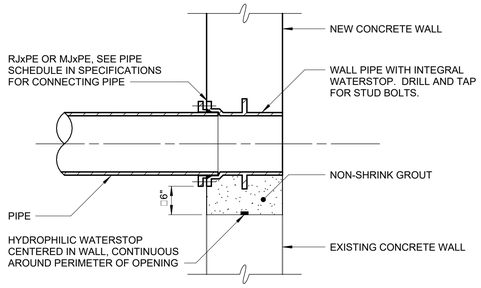

M-40-0104

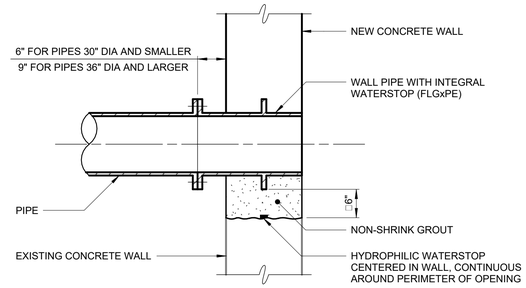

M-40-0110

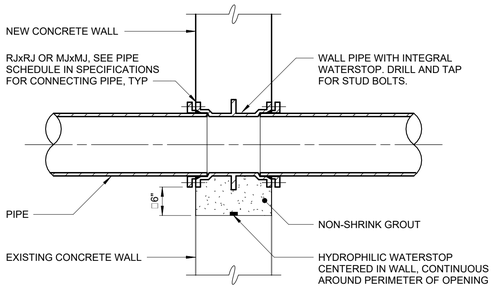

M-40-0102

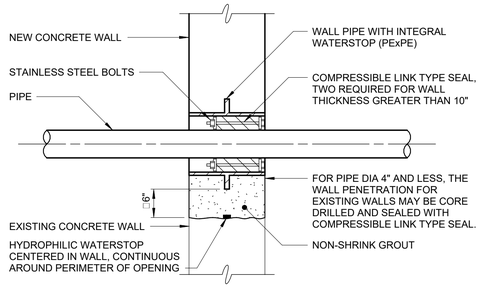

M-40-0111

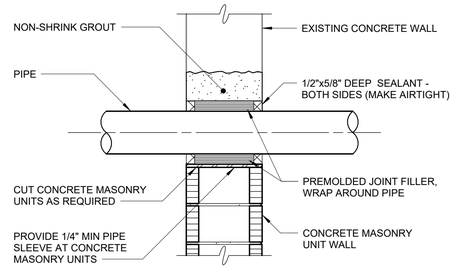

CAULKED WALL PENETRATION

M-40-0114

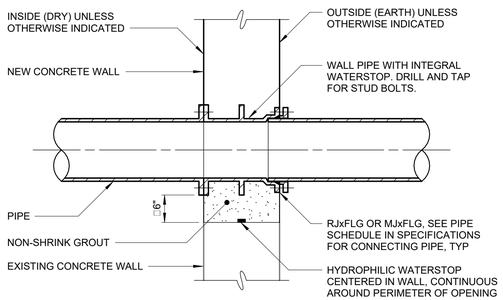

M-40-0103

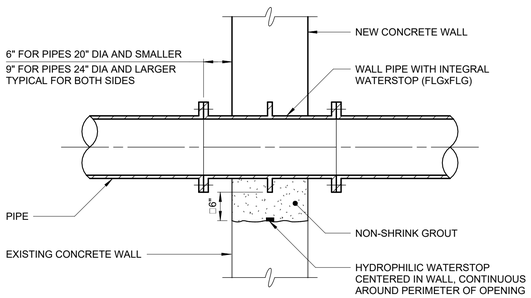

M-40-0108

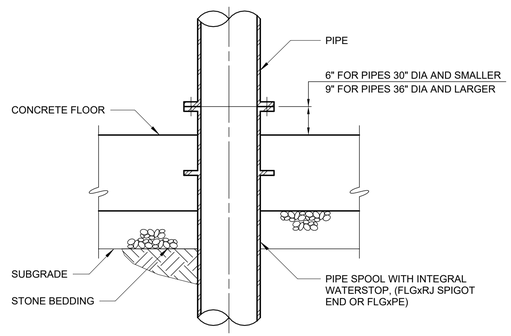

M-40-0113

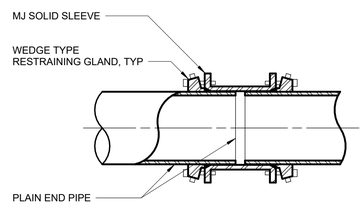

NOTE:
CONTRACTOR SHALL USE EBAA IRON 3800 MEGA-COUPLING. RESTRAINING HARDWARE SHALL BE PAINTED WITH TWO COATS COAL TAR (MIN 26 DRY MIL THICKNESS) TNEMEC 46-465 HI-BUILD OR EQUAL.

RESTRAINED MJ SOLID SLEEVE

M-40-0700

NOTES:

1. ALL WALL PIPES SHALL BE CAST UNLESS OTHERWISE NOTED.
2. PROVIDE PIPE JOINT WITHIN FIVE (5) FEET OF JOINT AT EXTERIOR FACE OF WALL AT CONNECTION TO ALL NEW AND EXISTING STRUCTURES OR MANHOLES.
3. ALL NEW OPENINGS IN EXISTING CONCRETE WALLS AND SLABS SHALL BE SAWCUT OR CORE DRILLED. USE OF JACKHAMMERS OR STITCH DRILLING SHALL NOT BE PERMITTED. ANNULAR SURFACE SHALL BE SMOOTH. ANNULAR SURFACE SHALL BE ROUGHENED BY APPROVED METHODS WHEN INSTALLATION OF NONSHRINK GROUT IS REQUIRED AT EXISTING CONCRETE WALLS.

WARNING
IT IS A VIOLATION OF SECTION 7209.2 OF THE NEW YORK STATE EDUCATION LAW FOR ANY PERSON, UNLESS ACTING UNDER THE DIRECTION OF A LICENSED PROFESSIONAL ENGINEER, TO ALTER IN ANY WAY PLANS, SPECIFICATIONS, PLATS OR REPORTS TO WHICH THE SEAL OF A PROFESSIONAL ENGINEER HAS BEEN APPLIED. IF AN ITEM BEARING THE SEAL OF A PROFESSIONAL ENGINEER IS ALTERED, THE ALTERING ENGINEER SHALL AFFIX TO THE ITEM HIS SEAL AND THE NOTATION "ALTERED BY" FOLLOWED BY HIS SIGNATURE, THE DATE, AND A SPECIFIC DESCRIPTION OF THE ALTERATION.

REV	ISSUED FOR	DATE	BY

PROJECT ENGINEER:	R. FROST
DESIGNED BY:	C. THORNTON
DRAWN BY:	B. CASULL
CHECKED BY:	E. FELDMAN
IF THIS BAR DOES NOT MEASURE 1" THEN DRAWING IS NOT TO FULL SCALE	0 1/2" 1"

BID SET

STATE OF NEW YORK · MCCARTHY · 085018 · LICENSED PROFESSIONAL ENGINEER

Hazen
HAZEN AND SAWYER
498 SEVENTH AVENUE, 11th FLOOR
NEW YORK, NEW YORK 10018

WESTCHESTER JOINT WATER WORKS
MAMARONECK, NY

RYE LAKE WATER FILTRATION PLANT
HARRISON, NY

MECHANICAL
DETAILS - SHEET 7

DATE:	FEB 2025
HAZEN NO.:	90388-000
CONTRACT NO.:	A1364-A
DRAWING NUMBER:	M-607

Autodesk Docs://90388-000_Rye_Lake_Filtration/90388-000-WFP-M.rvt
2/20/2025 1:07:32 AM

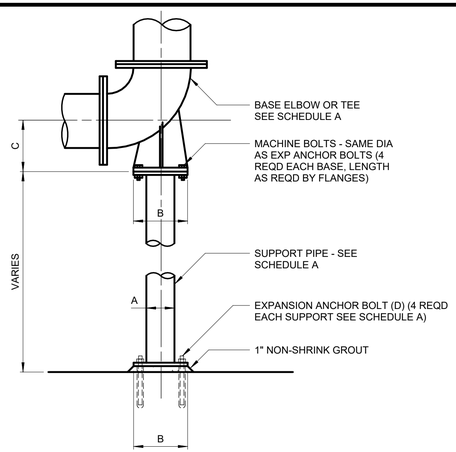

BASE ELBOW (TEE)

M-40-0300

SCHEDULE A

BASE ELBOW (TEE) (DIM IN INCHES)

PIPE SIZE	A	B	C	D DIA x LG
3	1 1/2	5	4 7/8	1/2 x 5
4	2	6	5 1/2	5/8 x 5
5-6	2 1/2	7	VARIES	5/8 x 5
8-10	4	9	VARIES	5/8 x 5
12-16	6	11	VARIES	3/4 x 6
18-24	8	13 1/2	VARIES	3/4 x 6
30	10	16	23	7/8 x 7
36	12	19	26	7/8 x 7

SCHEDULE B

ADJUSTABLE SADDLE (DIM IN INCHES)

PIPE SIZE	A	B	C	D DIA x LG
3	2 1/2	7	1 1/2	5/8 x 5
4-12	3	7 1/2	2 1/2	5/8 x 5
14-16	4	9	3	5/8 x 5
18-20	6	11	3 1/2	3/4 x 6
24-48	6	11	4	3/4 x 6

SCHEDULE C

SUPPORT RODS AND BRACKET SPACING (FOR STANDARD WEIGHT PIPE)

PIPE SIZE (INCHES)	BACK PLATE (INCHES)	MINIMUM ROD ∅ (INCHES)		MAX SPAN IN FEET (SEE NOTE 8)			
		PROCESS PIPING	STEEL AIR PIPING	COPPER	PLASTIC	STEEL	DIP (SEE NOTE 7)
UP TO 1	SEE NOTE 4	3/8	3/8	5	5	6	-
1 1/4-2	"	3/8	3/8	8	5	10	-
2 1/2-3 1/2	"	3/8	3/8	8	5	12	6
4-5	"	1/2	3/8	-	5	14	8
6	"	5/8	3/8	-	5	15	9
8-12	"	3/4	1/2	-	5	15	9
14-16	"	7/8	1/2	-	5	15	9
18	"	1	1/2	-	5	18	10
20-24	"	1 1/4	5/8	-	5	18	10

SCHEDULE D

TRAPEZE SUPPORT (DIM IN INCHES)

PIPE SIZE	STEEL TUBE SUPPORT BEAM VERT x HORZ	MINIMUM ROD ∅ (INCHES)		WASHER PLATE	BASE PLATE		WELD		ADHESIVE ANCHOR DIA	MAX SUPPORT SPACING IN FEET (SEE NOTE 8)	
		PROCESS PIPING	STEEL AIR PIPING		A	B	C	D		PROCESS PIPING	STEEL AIR PIPING
12-14	4x4x3/8	1/2	1/2	4x4x1/4	1	10	3/8	3/16	1/2	10	15
16-24	4x4x3/8	3/4	5/8	4x4x3/8	1	10	1/2	3/16	5/8	10	15
30-36	6x4x3/8	1	3/4	4x4x1/2	2	12	1/2	1/4	3/4	10	20
42	6x4x3/8	1 1/4	3/4	5x5x1/2	2	12	3/4	1/4	7/8	10	25
48	8x4x3/8	1 1/2	1	5x5x3/4	2	12	1	1/4	1	10	30

NOTES:

1. CONTRACTOR SHALL DESIGN THE SUPPORT SYSTEMS BASED ON ACTUAL WEIGHTS AND CONDITIONS AS SPECIFIED OR AS SHOWN ON THE CONTRACT DRAWINGS. PIPE HANGERS, SUPPORTS AND BRACKETS SHOWN HERE IN VARIOUS COMBINATIONS REPRESENT MINIMUM REQUIREMENTS FOR ACCEPTABLE SUPPORTS AS TO TYPES, MATERIALS, THICKNESSES, ORIENTATION, AND QUALITY. CONTRACTOR SHALL SUBMIT DESIGN CALCULATIONS AND DETAILS FOR PIPE SUPPORTS SEALED BY A PROFESSIONAL ENGINEER LICENSED BY THE STATE OR COMMONWEALTH WHERE THE PROJECT IS LOCATED WITH ALL PIPE HANGER AND SUPPORT SUBMISSIONS FOR REVIEW BY THE ENGINEER. WHEN SUBMITTING PROPOSED PIPE SUPPORTS AND SUPPORT LOCATIONS, THE CONTRACTOR SHALL USE APPROVED PIPING LAYOUT SUBMITTAL DRAWINGS TO SHOW PROPOSED PIPE SUPPORT TYPE AND LOCATION WITH ACCURATE DIMENSIONS TO DEMONSTRATE THAT SUPPORTS DO NOT EXCEED THE MAXIMUM SPACING REQUIREMENTS OF SECTION 40 05 07. THIS ENSURES THAT SUPPORTS HAVE BEEN COORDINATED WITH ACTUAL PIPE INSTALLATION DRAWINGS. AND THAT SPACING DOES NOT EXCEED MAXIMUM ALLOWABLE SPACING. THE PIPE SUPPORTS SHOWN AND REFERENCED UNDER SCHEDULES A, B & C ARE DESIGNED AND DETAILED FOR GRAVITY LOADING ONLY. RESULTING LATERAL LOADS FROM CONSTRUCTION CONDITIONS, DESIGN SEISMIC EVENT OR OTHER RELATED CONDITIONS SHALL BE APPLIED TO THE PIPE AND OTHER NON-STRUCTURAL COMPONENTS IN ACCORDANCE WITH THE GOVERNING BUILDING CODE. SUPPLEMENTAL LATERAL STIFFNESS, RESISTANCE AND MEMBERS (WHEN NECESSARY) SHALL BE PROVIDED ALONG PIPE OR AT GRAVITY SUPPORTS AND CONNECTIONS WHEN REQUIRED BY CALCULATIONS.
2. TYPICALLY, REINFORCED CONCRETE SUPPORTS SHALL BE USED WHEN PIPE CENTERLINE IS LESS THAN 3-FEET ABOVE CONCRETE FLOOR OR FINISHED GRADE, AND AT A MINIMUM, SHALL CONFORM TO STANDARD DETAIL S-03-0505.
3. MSS REFERS TO THE MANUFACTURERS STANDARDIZATION SOCIETY OF THE VALVE AND FITTINGS INDUSTRY, STANDARD PRACTICE SP-58 AND SP-69.
4. PIPE WALL SUPPORT AND PIPE SUPPORT RACK SHALL BE ASSEMBLED WITH CHANNEL FRAMES AND ACCESSORIES AS MANUFACTURED BY UNISTRUT CORP, OR VERSABAR CORP, OR EQUAL.
5. FABRICATED PIPE SUPPORT MAY BE USED AS SHOWN IN PIPE SUPPORT RACK DETAIL, OR TO SUPPORT PIPE FROM THE FLOOR.
6. BACK PLATES SHALL BE DESIGNED BY THE CONTRACTOR ACCORDING TO WALL TYPES AND THE WEIGHTS INVOLVED. BACK PLATE TO BE SUPPLIED BY BRACKET MANUFACTURER.
7. ALL INSULATED PIPES SHALL USE A SHIELD (MSS TYPE 40) WITH THE APPLICABLE PIPE SUPPORT.
8. MINIMUM OF ONE HANGER PER PIPE SECTION, CLOSE TO JOINT, ON THE BARREL. ALSO AT CHANGE IN DIRECTION AND BRANCH CONNECTIONS.
9. RODS AND SPACING ARE BASED ON STANDARD WEIGHT MATERIALS ACCORDING TO MSS SP-69, AND ARE FOR REFERENCE ONLY. THE CONTRACTOR SHALL SPACE HIS HANGERS BASED ON ACTUAL CONDITIONS.
10. REFER TO THE APPROPRIATE AND RELATED SPECIFICATION SECTIONS AND DRAWINGS OF THE CONTRACT DOCUMENTS REGARDING SUPPLEMENTAL DESIGN REQUIREMENTS RELATING TO PERFORMANCE SUBMISSIONS BY CONTRACTOR. ALL NON-STRUCTURAL COMPONENTS, INCLUDING PIPING, HVAC DUCT, PLUMBING AND ELECTRICAL CONDUIT SUPPORT SYSTEMS SHALL BE ADEQUATELY DESIGNED AND INSTALLED UTILIZING SUFFICIENT CONNECTIONS AND MEMBERS TO ACCOMMODATE AND RESIST THE DESIGN LATERAL FORCES ASSOCIATED WITH A SPECIFIC COMPONENT'S DYNAMIC INERTIA DURING THE DESIGN SEISMIC EVENT. REFER TO THE CODE COMPLIANCE DRAWING FOR STRUCTURAL DESIGN INFORMATION FOR SPECIFIC SEISMIC DESIGN CRITERIA.

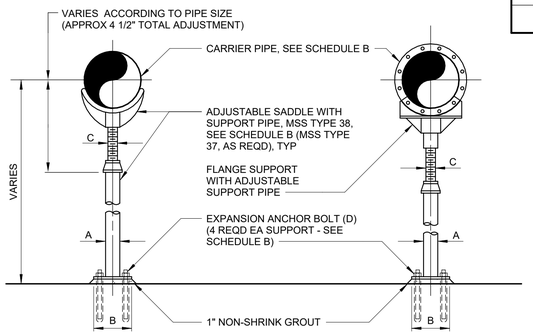

ADJUSTABLE SADDLE — FLANGE SUPPORT

M-40-0304

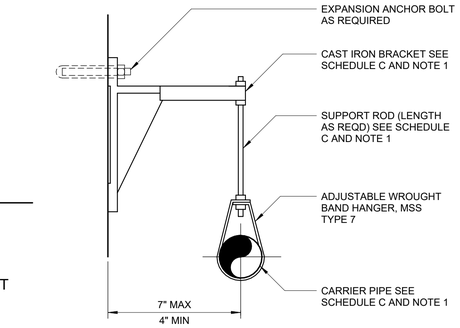

PIPE SUPPORT BRACKET

M-40-0305

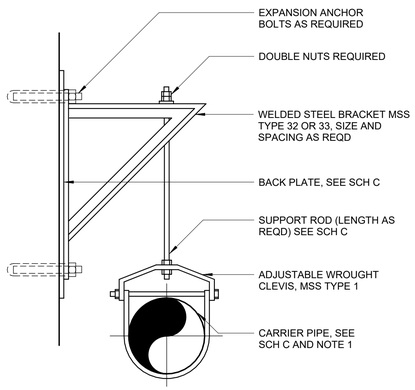

PIPE SUPPORT BRACKET

M-40-0306

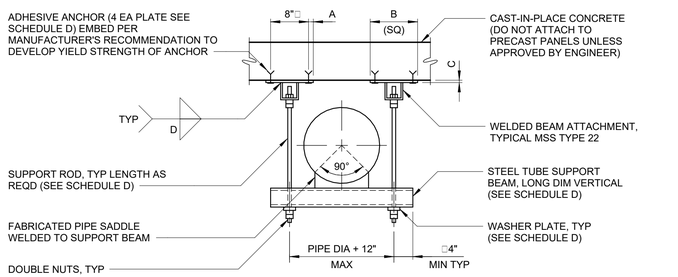

TRAPEZE SUPPORT

M-40-0310

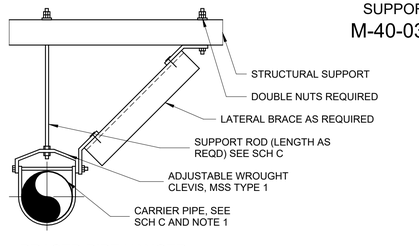

BRACED PIPE HANGER

M-40-0306R

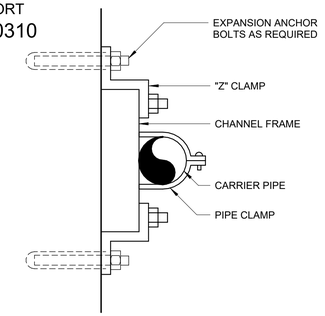

PIPE WALL SUPPORT AND SUPPORT RACK SHALL BE ASSEMBLED W/ CHANNEL FRAMES AND ACCESSORIES AS MANUFACTURED BY UNISTRUT CORP OR EQUAL

PIPE WALL SUPPORT

M-40-0301

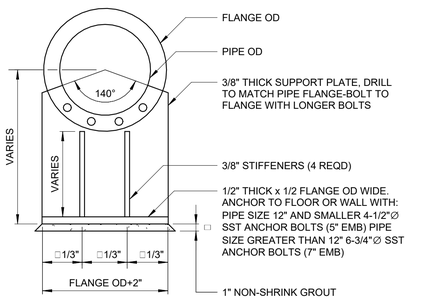

FABRICATED PIPE SUPPORT (AT FLANGE)

M-40-0308

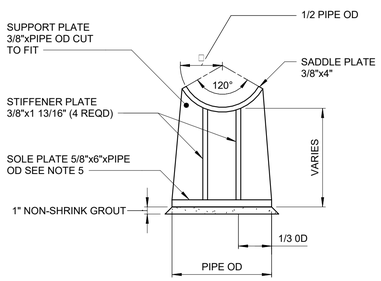

FABRICATED PIPE SUPPORT (AT PIPE)

M-40-0309R

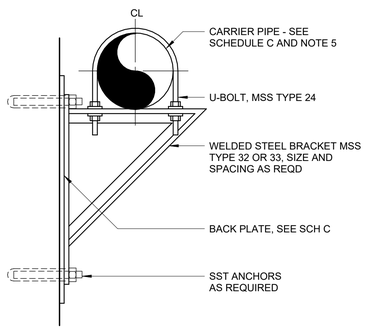

PIPE SUPPORT BRACKET

M-40-0303

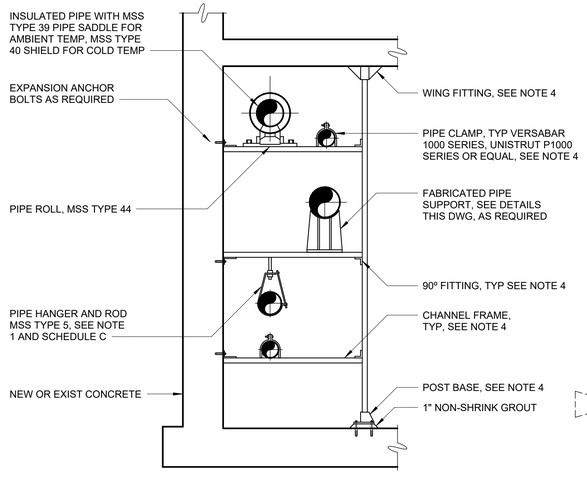

PIPE SUPPORT RACK

M-40-0307

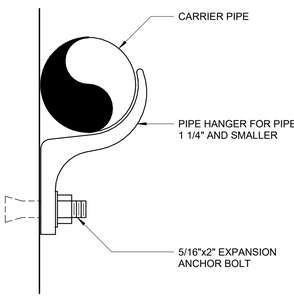

WALL HANGER PIPE SUPPORT

M-40-0302

WARNING
IT IS A VIOLATION OF SECTION 7209.2 OF THE NEW YORK STATE EDUCATION LAW FOR ANY PERSON, UNLESS ACTING UNDER THE DIRECTION OF A LICENSED PROFESSIONAL ENGINEER, TO ALTER IN ANY WAY PLANS, SPECIFICATIONS, PLATS OR REPORTS TO WHICH THE SEAL OF A PROFESSIONAL ENGINEER HAS BEEN APPLIED. IF AN ITEM BEARING THE SEAL OF A PROFESSIONAL ENGINEER IS ALTERED, THE ALTERING ENGINEER SHALL AFFIX TO THE ITEM HIS SEAL AND THE NOTATION "ALTERED BY" FOLLOWED BY HIS SIGNATURE, THE DATE, AND A SPECIFIC DESCRIPTION OF THE ALTERATION.

REV	ISSUED FOR	DATE	BY

PROJECT ENGINEER:	R. FROST
DESIGNED BY:	C. THORNTON
DRAWN BY:	B. CASULL
CHECKED BY:	E. FELDMAN

IF THIS BAR DOES NOT MEASURE 1" THEN DRAWING IS NOT TO FULL SCALE 0 1/2" 1"

BID SET



Hazen

HAZEN AND SAWYER
498 SEVENTH AVENUE, 11th FLOOR
NEW YORK, NEW YORK 10018

WESTCHESTER JOINT WATER WORKS
MAMARONECK, NY

RYE LAKE WATER FILTRATION PLANT
HARRISON, NY

MECHANICAL
DETAILS - SHEET 8

DATE:	FEB 2025
HAZEN NO.:	90388-000
CONTRACT NO.:	A1364-A
DRAWING NUMBER:	M-608

Autodesk Docs://90388-000_Rye_Lake_Filtration/90388-000-WFP-M.rvt
2/20/2025 1:07:33 AM

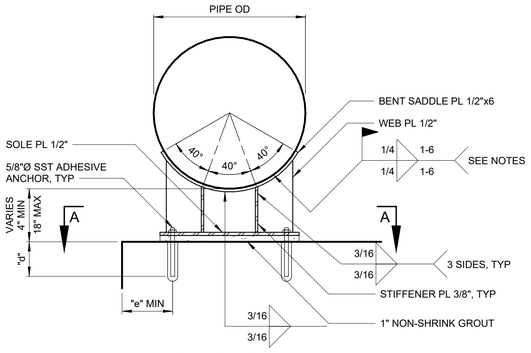

FIXED SUPPORT-CONCRETE

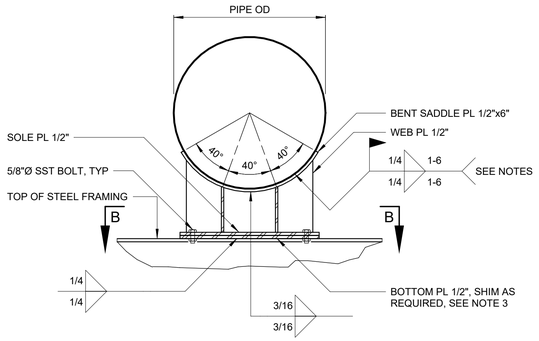

FIXED SUPPORT-STEEL

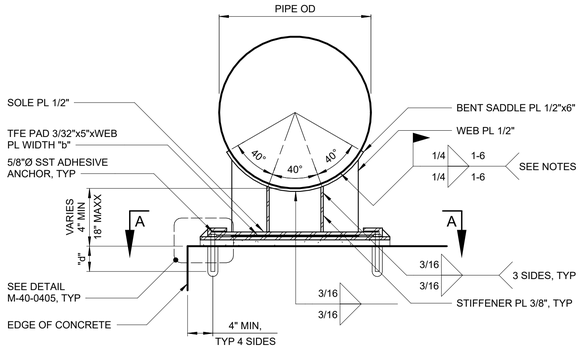

SLIDING SUPPORT-CONCRETE

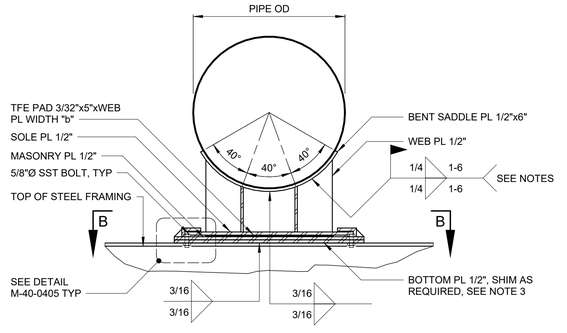

SLIDING SUPPORT-STEEL

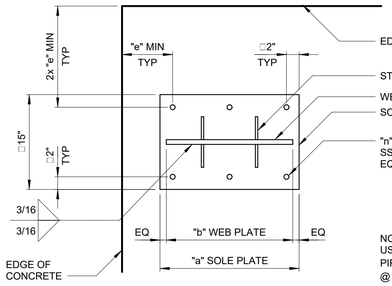

SECTIONAL PLAN A-A

FIXED SUPPORT FOR
6"-24" PROCESS AIR PIPE
MOUNTED ON CONCRETE

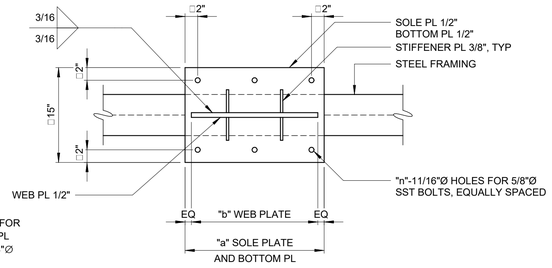

SECTIONAL PLAN B-B

FIXED SUPPORT FOR
6"-24" PROCESS AIR PIPE
MOUNTED ON STEEL

NOTE:
USE 1 STIFFENER PL CENTERED FOR PIPES < 14"Ø. USE 2 STIFFENER PL @ 40° AS SHOWN FOR PIPES ≥ 14"Ø

PIPE DIA	"a"	"b"	"n"	"d"	"e"
6"	10"	4"	4	5"	6"
8"	12"	6"	4	5"	6"
10"	12"	6"	4	5"	6"
12"	12"	8"	4	5"	7"
14"	12"	10"	4	5"	8"
16"	14"	12"	4	8"	8"
18"	16"	14"	4	10"	8"
20"	18"	16"	6	6"	8"
24"	22"	20"	6	6"	8"

COMMENTS:
- FOR PIPE 18" AND SMALLER, THE PIPE SUPPORT WAS DESIGNED FOR LONGITUDINAL, TRANSVERSE, AND UPLIFT INTERNAL THRUST LOADS ACTING CONCURRENTLY.
- FOR PIPE 20" AND 20" MOUNTED ON CONCRETE, THE PIPE SUPPORT WAS DESIGNED FOR LONGITUDINAL AND UPLIFT INTERNAL THRUST LOAD ONLY.

M-40-0400

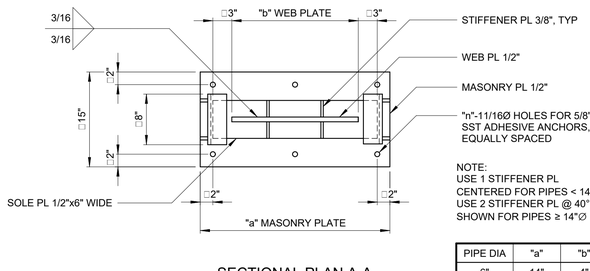

SECTIONAL PLAN A-A

SLIDING SUPPORT FOR
6"-24" PROCESS AIR PIPE
MOUNTED ON CONCRETE

NOTE:
USE 1 STIFFENER PL CENTERED FOR PIPES < 14"Ø. USE 2 STIFFENER PL @ 40° AS SHOWN FOR PIPES ≥ 14"Ø

PIPE DIA	"a"	"b"	"n"	"d"
6"	14"	4"	4	4"
8"	16"	6"	4	4"
10"	16"	6"	4	4"
12"	18"	8"	4	4"
14"	20"	10"	4	4"
16"	22"	12"	4	4"
18"	2'-0"	14"	4	5"
20"	2'-2"	16"	6	5"
24"	2'-6"	20"	6	6"

M-40-0401

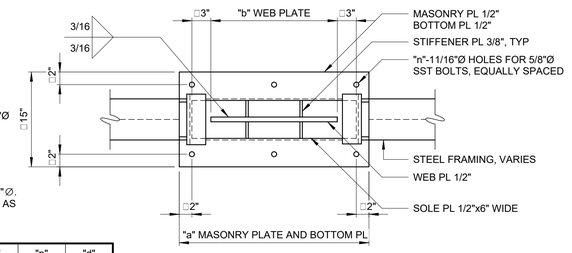

SECTIONAL PLAN B-B

SLIDING SUPPORT FOR
6"-24" PROCESS AIR PIPE
MOUNTED ON STEEL

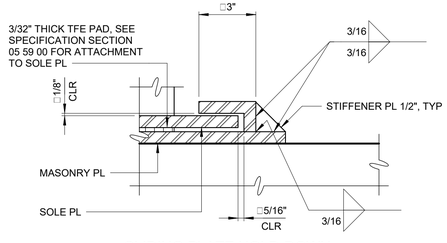

SLIDING PLATE HOLD-DOWN

M-40-0405

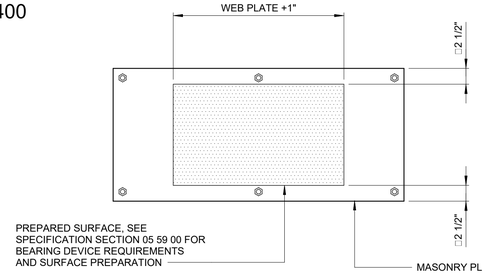

MASONRY PL BEARING SURFACE PREPARATION

M-40-0406

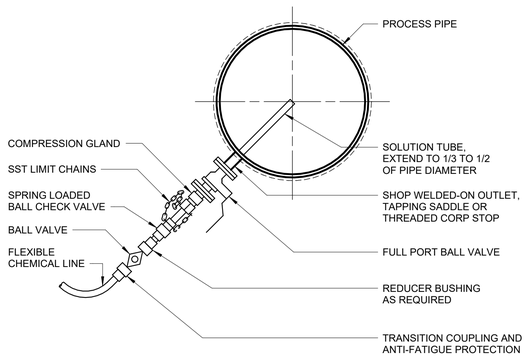

NOTES:

1. CHEMICAL INJECTION QUILL SHALL BE INSTALLED IN INTERIOR SPACES OR IN A MANHOLE BUILT AROUND THE PROCESS PIPE. ORIENTATION WILL VARY TO SUIT THE INSTALLATION, TAKING INTO ACCOUNT CHEMICAL CONSIDERATIONS AND REQUIRED CLEARANCE FOR RETRACTION AND INSERTION.
2. ALL WETTED COMPONENTS OF INJECTION QUILL SHALL BE COMPLETELY RESISTANT TO CORROSION BY THE SPECIFIED CHEMICAL.
3. CHEMICAL INJECTION QUILL SHALL BE PROVIDED AS SPECIFIED IN SPECIFICATION SECTION 46 41 42.

CHEMICAL INJECTION QUILL

M-46-0100R

PROCESS AIR PIPE SUPPORT NOTES:

1. MATERIAL OF SUPPORT FROM SOLE PLATE AND ABOVE SHALL MATCH MATERIAL OF PIPE.
2. MATERIAL OF BOTTOM PLATE SHALL MATCH MATERIAL OF STEEL FRAMING BELOW.
3. SHIM PLATE SHALL BE LOCATED ON TOP OF BOTTOM PLATE AND SHALL HAVE THE SAME DIMENSIONS AS BOTTOM PLATE.
4. DISSIMILAR METALS SHALL BE ISOLATED PER 40 05 00.
5. AIR PIPE SHALL BE FULLY INSTALLED PRIOR TO FIELD WELDING SADDLE PLATES TO PIPE.
6. ALL WORK INCLUDING FIELD WELDS SHALL BE APPROVED BY ENGINEER PRIOR TO TESTING OF AIR PIPE.
7. SOLE PLATE SHALL BE CENTERED ON MASONRY PLATE ON INITIAL INSTALLATION.

WARNING
IT IS A VIOLATION OF SECTION 7209.2 OF THE NEW YORK STATE EDUCATION LAW FOR ANY PERSON, UNLESS ACTING UNDER THE DIRECTION OF A LICENSED PROFESSIONAL ENGINEER, TO ALTER IN ANY WAY PLANS, SPECIFICATIONS, PLATS OR REPORTS TO WHICH THE SEAL OF A PROFESSIONAL ENGINEER HAS BEEN APPLIED. IF AN ITEM BEARING THE SEAL OF A PROFESSIONAL ENGINEER IS ALTERED, THE ALTERING ENGINEER SHALL AFFIX TO THE ITEM HIS SEAL AND THE NOTATION "ALTERED BY" FOLLOWED BY HIS SIGNATURE, THE DATE, AND A SPECIFIC DESCRIPTION OF THE ALTERATION.

REV	ISSUED FOR	DATE	BY

PROJECT ENGINEER:	R. FROST
DESIGNED BY:	C. THORNTON
DRAWN BY:	B. CASULL
CHECKED BY:	E. FELDMAN

IF THIS BAR DOES NOT MEASURE 1" THEN DRAWING IS NOT TO FULL SCALE 0 1/2" 1"

BID SET

STATE OF NEW YORK · McCARTHY · 085018 · LICENSED PROFESSIONAL ENGINEER

Hazen

HAZEN AND SAWYER
498 SEVENTH AVENUE, 11th FLOOR
NEW YORK, NEW YORK 10018

WESTCHESTER JOINT WATER WORKS
MAMARONECK, NY

RYE LAKE WATER FILTRATION PLANT
HARRISON, NY

MECHANICAL
DETAILS - SHEET 9

DATE:	FEB 2025
HAZEN NO.:	90388-000
CONTRACT NO.:	A1364-A
DRAWING NUMBER:	M-609

Autodesk Docs://90388-000_Rye_Lake_Filtration/90388-000-WFP-M.rvt
2/20/2025 1:07:35 AM

PROCESS AIR PIPE SUPPORT NOTES:

1. MATERIAL OF SUPPORT FROM SOLE PLATE AND ABOVE SHALL MATCH MATERIAL OF PIPE.
2. MATERIAL OF BOTTOM PLATE SHALL MATCH MATERIAL OF STEEL FRAMING BELOW.
3. SHIM PLATE SHALL BE LOCATED ON TOP OF BOTTOM PLATE AND SHALL HAVE THE SAME DIMENSIONS AS BOTTOM PLATE.
4. DISSIMILAR METALS SHALL BE ISOLATED PER 40 05 00.
5. AIR PIPE SHALL BE FULLY INSTALLED PRIOR TO FIELD WELDING SADDLE PLATES TO PIPE.
6. ALL WORK INCLUDING FIELD WELDS SHALL BE APPROVED BY ENGINEER PRIOR TO TESTING OF AIR PIPE.
7. SOLE PLATE SHALL BE CENTERED ON MASONRY PLATE ON INITIAL INSTALLATION.

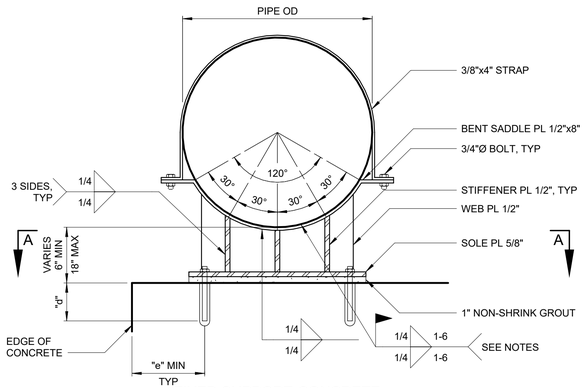

FIXED SUPPORT-CONCRETE

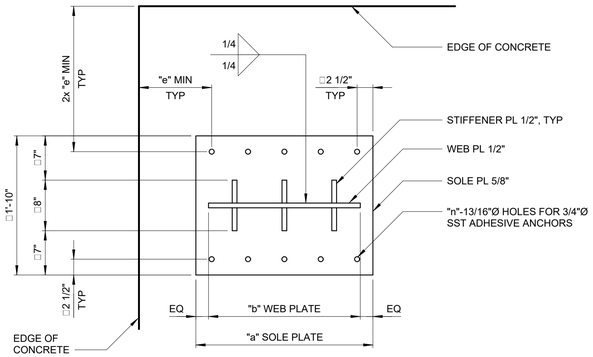

SECTIONAL PLAN A-A

PIPE DIA	"a"	"b"	"n"	"d"	"e"
30"	2'-4"	2'-0"	8	6"	11.5"
36"	2'-10"	2'-6"	10	10"	11.5"
42"	3'-4"	3'-0"	10	6"	11.5"
48"	3'-10"	3'-6"	10	6"	11.5"

FIXED SUPPORT FOR 30"-48"
PIPE MOUNTED ON CONCRETE

COMMENTS:
- FOR PIPE 30" AND 36", THE PIPE SUPPORT WAS DESIGNED FOR A LONGITUDINAL INTERNAL THRUST LOAD ONLY.
- FOR PIPE 42" AND 48", THE PIPE SUPPORT WAS NOT DESIGNED TO TAKE ANY INTERNAL THRUST LOAD.

M-40-0402

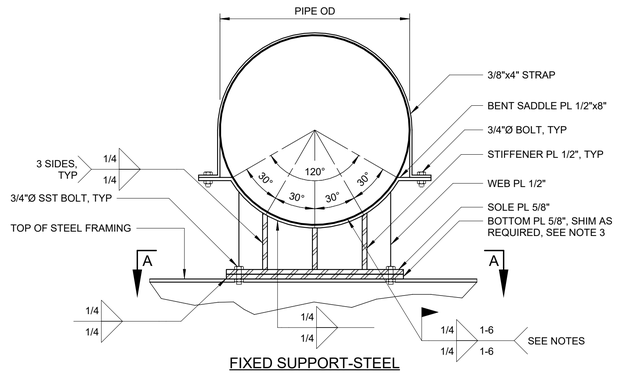

FIXED SUPPORT-STEEL

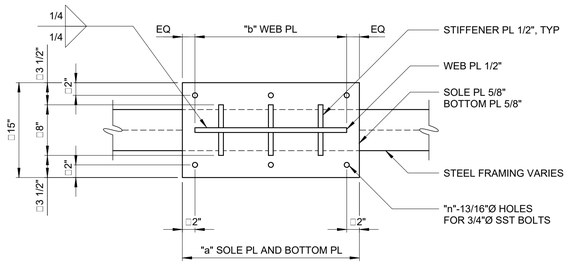

SECTIONAL PLAN A-A

PIPE DIA	"a"	"b"	"n"
30"	2'-4"	2'-0"	6
36"	2'-10"	2'-6"	8
42"	3'-4"	3'-0"	8
48"	3'-9"	3'-6"	8

FIXED SUPPORT FOR 30"-48" PIPE
MOUNTED ON STEEL

M-40-0403

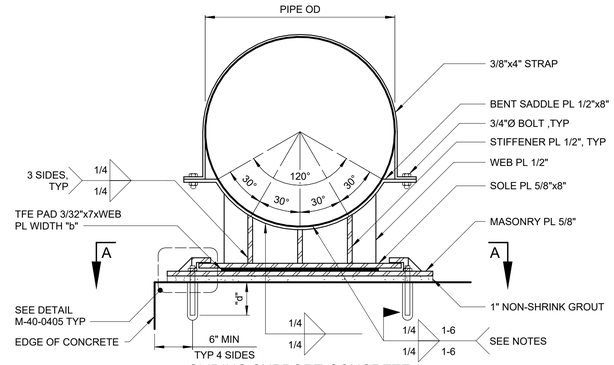

SLIDING SUPPORT-CONCRETE

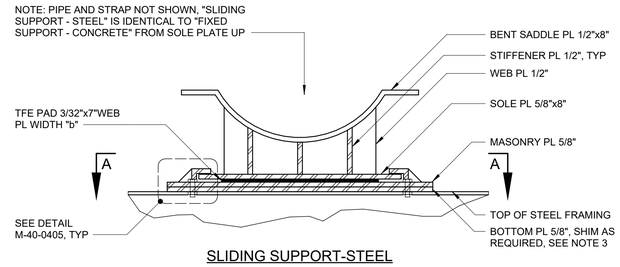

SLIDING SUPPORT-STEEL

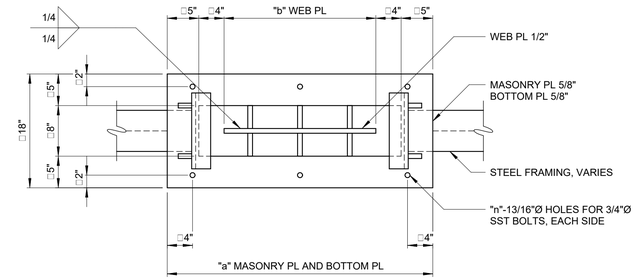

SECTIONAL PLAN A-A

PIPE DIA	"a"	"b"	"n"	"d"
30"	3'-6"	2'-0"	3	4"
36"	4'-0"	2'-6"	4	5"
42"	4'-6"	3'-0"	4	6"
48"	5'-0"	3'-6"	4	7"

SLIDING SUPPORT FOR 30"-48" PIPE

M-40-0404

WARNING
IT IS A VIOLATION OF SECTION 7209.2 OF THE NEW YORK STATE EDUCATION LAW FOR ANY PERSON, UNLESS ACTING UNDER THE DIRECTION OF A LICENSED PROFESSIONAL ENGINEER, TO ALTER IN ANY WAY PLANS, SPECIFICATIONS, PLATS OR REPORTS TO WHICH THE SEAL OF A PROFESSIONAL ENGINEER HAS BEEN APPLIED. IF AN ITEM BEARING THE SEAL OF A PROFESSIONAL ENGINEER IS ALTERED, THE ALTERING ENGINEER SHALL AFFIX TO THE ITEM HIS SEAL AND THE NOTATION "ALTERED BY" FOLLOWED BY HIS SIGNATURE, THE DATE, AND A SPECIFIC DESCRIPTION OF THE ALTERATION.

REV	ISSUED FOR	DATE	BY

PROJECT ENGINEER:	R. FROST
DESIGNED BY:	C. THORNTON
DRAWN BY:	B. CASULL
CHECKED BY:	E. FELDMAN
IF THIS BAR DOES NOT MEASURE 1" THEN DRAWING IS NOT TO FULL SCALE	0 1/2" 1"

BID SET

STATE OF NEW YORK · E. J. McCARTHY · 085016 · LICENSED PROFESSIONAL ENGINEER

Hazen
HAZEN AND SAWYER
498 SEVENTH AVENUE, 11th FLOOR
NEW YORK, NEW YORK 10018

WESTCHESTER JOINT WATER WORKS
MAMARONECK, NY

RYE LAKE WATER FILTRATION PLANT
HARRISON, NY

MECHANICAL
DETAILS - SHEET 10

DATE:	FEB 2025
HAZEN NO.:	90388-000
CONTRACT NO.:	A1364-A
DRAWING NUMBER:	M-610

Autodesk Docs://90388-000_Rye_Lake_Filtration/90388-000-WFP-M.rvt
2/20/2025 1:07:36 AM

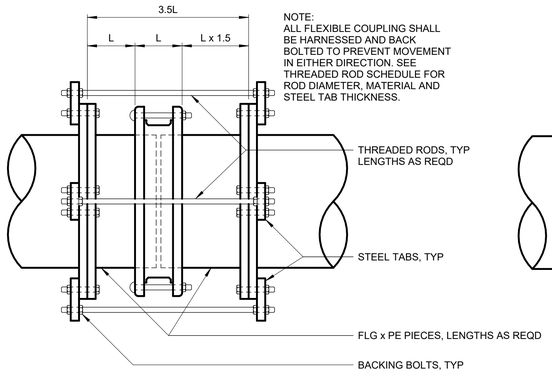

HARNESSED SLEEVE TYPE COUPLING

M-40-0701

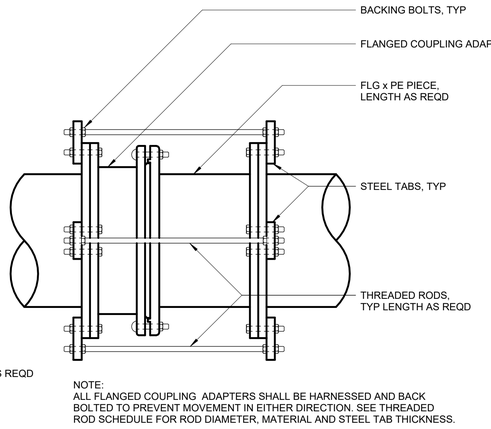

NOTE:
ALL FLANGED COUPLING ADAPTERS SHALL BE HARNESSED AND BACK BOLTED TO PREVENT MOVEMENT IN EITHER DIRECTION. SEE THREADED ROD SCHEDULE FOR ROD DIAMETER, MATERIAL AND STEEL TAB THICKNESS.

HARNESSED FLANGED COUPLING ADAPTER

M-40-0702

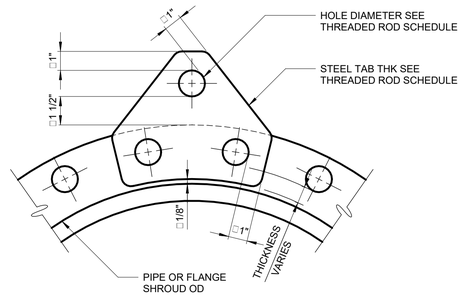

STEEL TAB

M-40-0703

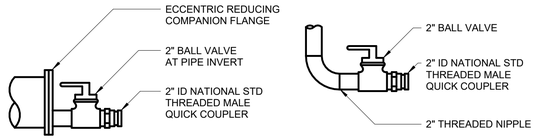

TYPE I TYPE II

NOTES:

1. ALL 2" PIPING, FITTINGS, BALL VALVE AND QUICK CONNECT SHALL BE 316 SST.
2. WHERE APPLICABLE, ISOLATION KITS SHALL BE USED TO PROVIDE ISOLATION OF DIFFERENT MATERIALS.

FLUSHING CONNECTIONS

M-40-0705R

THREADED ROD SCHEDULE

PIPE SIZE	REQUIRED TIE QUANTITY FOR DESIGN PRESSURE					THREADED ROD SIZE, INCHES	TAB THICKNESS, INCHES
	50 PSI	100 PSI	150 PSI	200 PSI	250 PSI		
3	2	2	2	2	2	5/8	1/2
4	2	2	2	2	2	5/8	1/2
6	2	2	2	2	2	5/8	3/4
8	2	2	2	3	3	5/8	3/4
10	2	2	2	3	3	3/4	1
12	2	2	2	3	3	7/8	1
14	2	2	2	3	3	1	1
16	2	2	2	3	4	1	1
18	2	2	3	4	5	1	1
20	2	3	4	5	6	1	1
24	2	3	5	6	9	1	1
30	2	3	5	6	9	1 1/4	1 1/4
36	3	5	7	9	12	1 1/4	1 1/4
42	3	6	9	12	16	1 1/4	1 1/4
48	3	6	8	11	15	1 1/2	1 3/4
54	4	7	10	14	18	1 1/2	1 3/4
60	5	9	13	17	23	1 1/2	1 3/4
64/66	4	8	11	15	20	1 3/4	2
72	5	9	13	18	24	1 3/4	2

1. THREADED RODS FOR ALL PIPE DIAMETERS SHALL BE ASTM A193 (GRADE B7).
2. ALL TABS SHALL BE ASTM A36 STEEL.
3. ASTM A193 (GRADE B7) RODS SHALL BE LABELED AND BUNDLED SEPARATELY.
4. THIS SCHEDULE SHALL APPLY FOR HARNESSED FLANGED ADAPTERS, HARNESSED FLEXIBLE COUPLINGS AND ALL MECHANICAL JOINT COUPLINGS, SLEEVES ETC. THAT ARE REQUIRED TO BE HARNESSED.
5. RODS THREADED AT ENDS (INCLUDING NUTS) SHALL BE EQUALLY SPACED AROUND PIPE BETWEEN ALL MECHANICAL JOINT FITTINGS (TEE, VALVES, BEND, PLUG, ETC.) OR AS OTHERWISE SHOWN ON THE CONTRACT DRAWINGS. THREADED RODS SHALL BE AS SHOWN IN THE THREADED ROD SCHEDULE. SEE NOTE 6.
6. RODS, NUTS, ETC., IN CONTACT WITH SOIL SHALL BE PAINTED WITH TWO COATS COAL TAR (MIN 26 DRY MIL THICKNESS) TNEMEC 46-465 HI-BUILD OR EQUAL.

M-40-0780

WARNING
IT IS A VIOLATION OF SECTION 7209.2 OF THE NEW YORK STATE EDUCATION LAW FOR ANY PERSON, UNLESS ACTING UNDER THE DIRECTION OF A LICENSED PROFESSIONAL ENGINEER, TO ALTER IN ANY WAY PLANS, SPECIFICATIONS, PLATS OR REPORTS TO WHICH THE SEAL OF A PROFESSIONAL ENGINEER HAS BEEN APPLIED. IF AN ITEM BEARING THE SEAL OF A PROFESSIONAL ENGINEER IS ALTERED, THE ALTERING ENGINEER SHALL AFFIX TO THE ITEM HIS SEAL AND THE NOTATION "ALTERED BY" FOLLOWED BY HIS SIGNATURE, THE DATE, AND A SPECIFIC DESCRIPTION OF THE ALTERATION.

REV	ISSUED FOR	DATE	BY

PROJECT ENGINEER: R. FROST
DESIGNED BY: C. THORNTON
DRAWN BY: B. CASULL
CHECKED BY: E. FELDMAN

IF THIS BAR DOES NOT MEASURE 1" THEN DRAWING IS NOT TO FULL SCALE 0 1/2" 1"

BID SET

STATE OF NEW YORK · EDWARD J. McCARTHY · 085018 · LICENSED PROFESSIONAL ENGINEER

Hazen

HAZEN AND SAWYER
498 SEVENTH AVENUE, 11th FLOOR
NEW YORK, NEW YORK 10018

WESTCHESTER JOINT WATER WORKS
MAMARONECK, NY

RYE LAKE WATER FILTRATION PLANT
HARRISON, NY

MECHANICAL
DETAILS - SHEET 11

DATE: FEB 2025
HAZEN NO.: 90388-000
CONTRACT NO.: A1364-A
DRAWING NUMBER: M-611

Autodesk Docs://90388-000_Rye_Lake_Filtration/90388-000-WFP-M.rvt
2/20/2025 1:07:37 AM

INSTRUMENT AND FUNCTION SYMBOLS

LOCATION AND ACCESSIBILITY	SHARED DISPLAY/SHARED CONTROL: PRIMARY CHOICE OR BASIC PROCESS CONTROL SYSTEM	SHARED DISPLAY/SHARED CONTROL: ALTERNATE CHOICE OR SAFETY INSTRUMENTED SYSTEM	COMPUTER SYSTEMS AND SOFTWARE	DISCRETE
- LOCATED IN FIELD - NOT PANEL, CABINET, OR CONSOLE MOUNTED - VISIBLE AT FIELD LOCATION - NORMALLY OPERATOR ACCESSIBLE	ABCD 12345	ABCD 12345	ABCD 12345	ABCD 12345
- LOCATED IN OR ON FRONT OF CENTRAL OR MAIN PANEL OR CONSOLE - VISIBLE ON FRONT OF PANEL OR ON VIDEO DISPLAY - NORMALLY OPERATOR ACCESSIBLE AT PANEL FRONT OR CONSOLE	ABCD 12345	ABCD 12345	ABCD 12345	ABCD 12345
- LOCATED IN REAR OF CENTRAL OR MAIN PANEL - LOCATED IN CABINET BEHIND PANEL - NOT VISIBLE ON FRONT OF PANEL OR ON VIDEO DISPLAY - NOT NORMALLY OPERATOR ACCESSIBLE AT PANEL OR CONSOLE	ABCD 12345	ABCD 12345	ABCD 12345	ABCD 12345
- LOCATED IN OR ON FRONT OF SECONDARY OR LOCAL PANEL OR CONSOLE - VISIBLE ON FRONT OF PANEL OR ON VIDEO DISPLAY - NORMALLY OPERATOR ACCESSIBLE AT PANEL FRONT OR CONSOLE	ABCD 12345	ABCD 12345	ABCD 12345	ABCD 12345
- LOCATED IN REAR OF SECONDARY OR LOCAL PANEL - LOCATED IN FIELD CABINET - NOT NORMALLY OPERATOR ACCESSIBLE AT PANEL OR CONSOLE	ABCD 12345	ABCD 12345	ABCD 12345	ABCD 12345

X — SUFFIX (X) TO DIFFERENTIATE BETWEEN INSTRUMENTS AND FUNCTIONS THAT WOULD OTHERWISE HAVE THE SAME IDENTIFICATION.

SINGLE INSTRUMENT OR OTHER COMPONENT HAVING MULTIPLE FUNCTIONS OR SHARING A COMMON HOUSING

(ZZZ) — DESIGNATIONS OF CONTROL FUNCTIONS (ZZZ) ASSOCIATED WITH INSTRUMENT OR OTHER COMPONENTS.

AHC	- AUTO/HOLD/CLOSE		OC	- OPEN/CLOSE	
AM	- AUTO/MANUAL		OSC	- OPEN/STOP/CLOSED	
CALC	- CALCULATION		POT	- POTENTIOMETER	
DEV	- DEVIATION		RL	- RAISE/LOWER	
MOA	- MANUAL/OFF/AUTO		RS	- RUN/STOP	
HOR	- HAND/OFF/REMOTE		RSL	- RAISE/STOP/LOWER	
LOS	- LOCKOUT STOP		SD	- SHUTDOWN	
LR	- LOCAL/REMOTE		SEL	- SELECT	
LSR	- LOCAL/STOP/REMOTE		SP	- SET POINT	
00	- ON / OFF		SR	- START/RESET	
			SS	- STOP/START	

* — INSTRUMENT WITH COMPUTING OR CONVERTING FUNCTION

* — CONTROL SYSTEM COMPUTING FUNCTION

CONVERT

E - VOLTAGE	H - HYDRAULIC
I - CURRENT	O - ELECTROMAGNETIC, SONIC
P - PNEUMATIC	R - RESISTANCE (ELECT.)
A - ANALOG	D - DIGITAL
B - BINARY	

COMPUTE

*		P	PROPORTIONAL		DIFFERENCE
	SUBTRACTOR	R	DERIVATIVE		HIGH SELECTING
	MULTIPLYING		AVERAGING		LOW SELECTING
	DIVIDING		RATIO		INTEGRAL
	ROOT EXTRACTION	PID	PID	#	COMPLEX FUNCTION

= 1, 2, 3, etc.

REFER TO NOTE ON SAME SHEET FOR BRIEF DESCRIPTION

* — ELECTRICAL CONTROL INTERLOCK

\# — COMPLEX INTERLOCK
= 1, 2, 3, etc.
REFER TO NOTE ON SAME SHEET FOR BRIEF DESCRIPTION

AND — AND LOGIC

OR — OR LOGIC

ABCD 1234 — PILOT LIGHT (FRONT PANEL MTD)

ABCD 1234 — PILOT LIGHT (FILED MTD)

WARNING
IT IS A VIOLATION OF SECTION 7209.2 OF THE NEW YORK STATE EDUCATION LAW FOR ANY PERSON, UNLESS ACTING UNDER THE DIRECTION OF A LICENSED PROFESSIONAL ENGINEER, TO ALTER IN ANY WAY PLANS, SPECIFICATIONS, PLATS OR REPORTS TO WHICH THE SEAL OF A PROFESSIONAL ENGINEER HAS BEEN APPLIED. IF AN ITEM BEARING THE SEAL OF A PROFESSIONAL ENGINEER IS ALTERED, THE ALTERING ENGINEER SHALL AFFIX TO THE ITEM HIS SEAL AND THE NOTATION "ALTERED BY" FOLLOWED BY HIS SIGNATURE, THE DATE, AND A SPECIFIC DESCRIPTION OF THE ALTERATION.

VALVE, GATE, AND ACTUATOR SYMBOLS

- GATE VALVE
- PLUG VALVE
- GLOBE VALVE
- BALL VALVE
- BUTTERFLY VALVE
- BALL CHECK VALVE
- SWING CHECK VALVE
- CHECK VALVE
- 3-WAY VALVE
- 3-WAY BALL VALVE
- DIAPHRAGM VALVE
- PINCH VALVE
- NEEDLE VALVE
- SLUICE GATE
- STOP/SLIDE GATE
- S — SOLENOID ACTUATOR
- P — PNEUMATIC ACTUATOR
- BACKFLOW PREVENTER
- PRESSURE RELIEF VALVE
- VACUUM RELIEF VALVE
- COMBINATION VACUUM AND PRESSURE RELIEF VALVE
- PRESSURE-REDUCING REGULATOR
- BACKPRESSURE REGULATOR
- V — AIR RELEASE VALVE
- M — ROTARY MOTOR
- E/H — ELECTROHYDRAULIC ACTUATOR
- MANUAL ACTUATOR

PUMP AND EQUIPMENT SYMBOLS

- CENTRIFUGAL WET PIT PUMP (OR DRY-PIT SUBMERSIBLE)
- BLOWER (CENTRIFUGAL)
- GEAR PUMP OR BLOWER (POSITIVE DISPLACEMENT)
- CHOPPER PUMP
- PISTON PUMP
- DIAPHRAGM PUMP
- ROTARY LOBE PUMP OR BLOWER (POSITIVE DISPLACEMENT)
- METERING PUMP
- COMPRESSOR
- PROGRESSIVE CAVITY PUMP
- VERTICAL PUMP
- INLINE GRINDER
- CENTRIFUGAL PUMP
- SCREW CENTRIFUGAL PUMP
- M — MIXER

MISCELLANEOUS SYMBOLS

- EXPANSION JOINT
- QUICK CONNECT
- BLIND FLANGE
- FLEXIBLE HOSE
- CALIBRATION CYLINDER
- PULSATION DAMPENER
- EXPANSION TANK
- HORN
- HORN/STROBE
- RUPTURE DISK
- V — VENT
- DIAPHRAGM SEAL
- FULL LINE OR TAPPED RING SEAL
- D — DRAIN
- XXXX-YYYY — EQUIPMENT OR PANEL TAG
- M — MOTOR
- FILTER
- AIR FILTER
- STATIC MIXER
- EDUCTOR

PRIMARY ELEMENT SYMBOLS

- M — MAGNETIC FLOW METER
- SONIC FLOW METER
- ΔT — THERMAL MASS FLOW METER
- TURBINE OR PROPELLER FLOW METER
- VENTURI FLOW METER
- AVERAGING PITOT TUBE
- FICV — ROTAMETER WITH INTEGRAL VALVE
- ABCD 1234 XX — XX: RF=ADMITTANCE/CAPACITANCE MAN=MANOMETER
- ULTRASONIC LEVEL SENSOR
- SUBMERSIBLE LEVEL SENSOR
- NON-CONTACT RADAR LEVEL SENSOR
- GUIDED WAVE RADAR LEVEL SENSOR
- FLOAT LEVEL SWITCH
- CAPACITANCE LEVEL SENSOR

ABBREVIATIONS

AXX 12345 — ANALYSIS INSTRUMENT

(ZZZ) (ZZZ) = ALK - ALKALINITY

CI	-	CORROSION INHIBITOR
CL	-	CHLORINE
F	-	FLUORINE
PH	-	HYDROGEN ION CONCENTRATION
PO4	-	PHOSPHATE
SCD	-	STREAMING CURRENT DETECTOR
TURB	-	TURBIDITY
UV	-	ULTRAVIOLET

OIT	-	OPERATOR INTERFACE TERMINAL
PLC	-	PROGRAMMABLE LOGIC CONTROLLER
RIO	-	REMOTE INPUT/OUPUT
SCADA	-	SUPERVISORY CONTROL AND DATA ACQUISITION
UPS	-	UNINTERRUPTIBLE POWER SUPPLY

GENERAL NOTES

1. SYMBOLS AND NOMENCLATURE ARE BASED ON ANSI/ISA-5.1-2009.
2. REFER TO LEGEND SHEETS OF OTHER DISCIPLINES FOR ADDITIONAL SYMBOLS AND ABBREVIATIONS.
3. REFER TO SPECIFICATIONS FOR ADDITIONAL DETAIL ON CONTROL SYSTEM FUNCTIONAL REQUIREMENTS.
4. DEVICES DENOTED WITH AN DIAMOND (◆) ARE PROVIDED BY EQUIPMENT VENDOR OR OTHER DISCIPLINES. REFER TO THE DRAWINGS AND SPECIFICATIONS OF OTHER DISCIPLINES FOR ADDITIONAL DETAIL.
5. POWER SUPPLIES FOR LOOPS OR SYSTEMS SHALL BE FURNISHED BY THE INSTRUMENTATION SUPPLIER TO MEET THE PARTICULAR CHARACTERISTICS (E.G., VOLTAGE AND CURRENT REQUIREMENTS) OF COMPONENTS IN EACH LOOP OR SYSTEM.

LINE SYMBOLS AND LEGEND

- MAJOR PROCESS PIPES OR CHANNELS
- SECONDARY PROCESS OR MECHANICAL CONNECTION
- AIR SUPPLY OR SIGNAL
- ELECTRICAL SIGNAL/ COPPER CABLE
- DATA LINK OR INTERNAL SOFTWARE LINK
- FIBER OPTIC CABLE
- CAT6 CABLE

REFER TO SYSTEM ARCHITECTURE SHEETS FOR LINETYPES REPRESENTING OTHER MEDIA AND PROTOCOLS

- VENDOR EQUIPMENT BOUNDARY
- EXISTING EQUIPMENT / SIGNALS
- FUTURE EQUIPMENT / SIGNALS
- PROCESS/SIGNALS NOT CONNECTED (CROSSING)
- PROCESS/SIGNALS CONNECTED
- ID # / I-0X — OFF-SHEET CONNECTOR
- DISCRETE ELECTRICAL SIGNALS
- DISCRETE DIGITAL SIGNALS
- ANALOG ELECTRICAL SIGNALS
- ANALOG DIGITAL SIGNALS

IDENTIFICATION LETTERS

	FIRST LETTERS: MEASURED OR INITIATING VARIABLE	FIRST LETTERS: VARIABLE MODIFIER	SUCCEEDING LETTERS: READOUT/ PASSIVE FUNCTION	SUCCEEDING LETTERS: OUTPUT/ ACTIVE FUNCTION	SUCCEEDING LETTERS: FUNCTION MODIFIER
A	ANALYSIS		ALARM		
B	BURNER, COMBUSTION		USER'S CHOICE	USER'S CHOICE	USER'S CHOICE
C	CONDUCTIVITY			CONTROL	CLOSE
D	DENSITY (MASS) OR SPECIFIC	DIFFERENCE, DIFFERENTIAL			DEVIATION
E	GRAVITY VOLTAGE (EMF)		SENSOR, PRIMARY ELEMENT		
F	FLOW, FLOW RATE	RATIO			
G	USER'S CHOICE		GLASS, GAUGE, VIEWING DEVICE		
H	HAND				HIGH
I	CURRENT		INDICATE		
J	POWER		SCAN		
K	TIME, SCHEDULE	TIME RATE OF CHANGE		CONTROL STATION	
L	LEVEL		LIGHT		LOW
M	MOISTURE OR HUMIDITY	MOMENTARY			MIDDLE, INTERMEDIATE
N	TORQUE		USER'S CHOICE	USER'S CHOICE	USER'S CHOICE
O	USER'S CHOICE		ORIFICE, RESTRICTION		OPEN
P	PRESSURE		POINT (TEST CONNECTION)		
Q	QUANTITY	INTEGRATE, TOTALIZE	INTEGRATE, TOTALIZE		
R	RADIATION		RECORD		RUN
S	SPEED, FREQUENCY	SAFETY		SWITCH	STOP
T	TEMPERATURE			TRANSMIT	
U	MULTIVARIABLE		MULTIFUNCTION	MULTIFUNCTION	
V	VIBRATION, MECHANICAL ANALYSIS			VALVE, DAMPER, LOUVER	
W	WEIGHT, FORCE		WELL PROBE		
X	UNCLASSIFIED	X-AXIS	ACCESSORY DEVICES, UNCLASSIFIED	UNCLASSIFIED	UNCLASSIFIED
Y	EVENT, STATE, PRESENCE	Y-AXIS		AUXILIARY DEVICES	
Z	POSITION, DIMENSION	Z-AXIS, SAFETY INSTRUMENTED SYSTEM		DRIVER, ACTUATOR, UNCLASSIFIED FINAL CONTROL ELEMENT	

REV	ISSUED FOR	DATE	BY

PROJECT ENGINEER:	R. FROST
DESIGNED BY:	F.BEATY
DRAWN BY:	F.BEATY
CHECKED BY:	G.MARKOU
IF THIS BAR DOES NOT MEASURE 1" THEN DRAWING IS NOT TO FULL SCALE	0 1/2" 1"

BID SET

STATE OF NEW YORK — GEORGE MARKOU — 072603 — LICENSED PROFESSIONAL ENGINEER

Hazen

HAZEN AND SAWYER
498 SEVENTH AVENUE, 11th FLOOR
NEW YORK, NEW YORK 10018

WESTCHESTER JOINT WATER WORKS
MAMARONECK, NY

RYE LAKE WATER FILTRATION PLANT
HARRISON, NY

INSTRUMENTATION
GENERAL NOTES, SYMBOLS AND LEGEND

DATE:	FEB 2025
HAZEN NO.:	90388-000
CONTRACT NO.:	A1364-A
DRAWING NUMBER:	I-001

File: C:\USERS\FBEATY\APPDATA\LOCAL\AUTODESK\AUTOCAD PLANT 3D\COLLABORATION\CACHE\RYE LAKE\PID DWG\I-001 Saved by FBEATY Save date: 1/31/2025 3:05 PM
PLOT DATE: 2/3/2025 1:38 PM BY: FBEATY

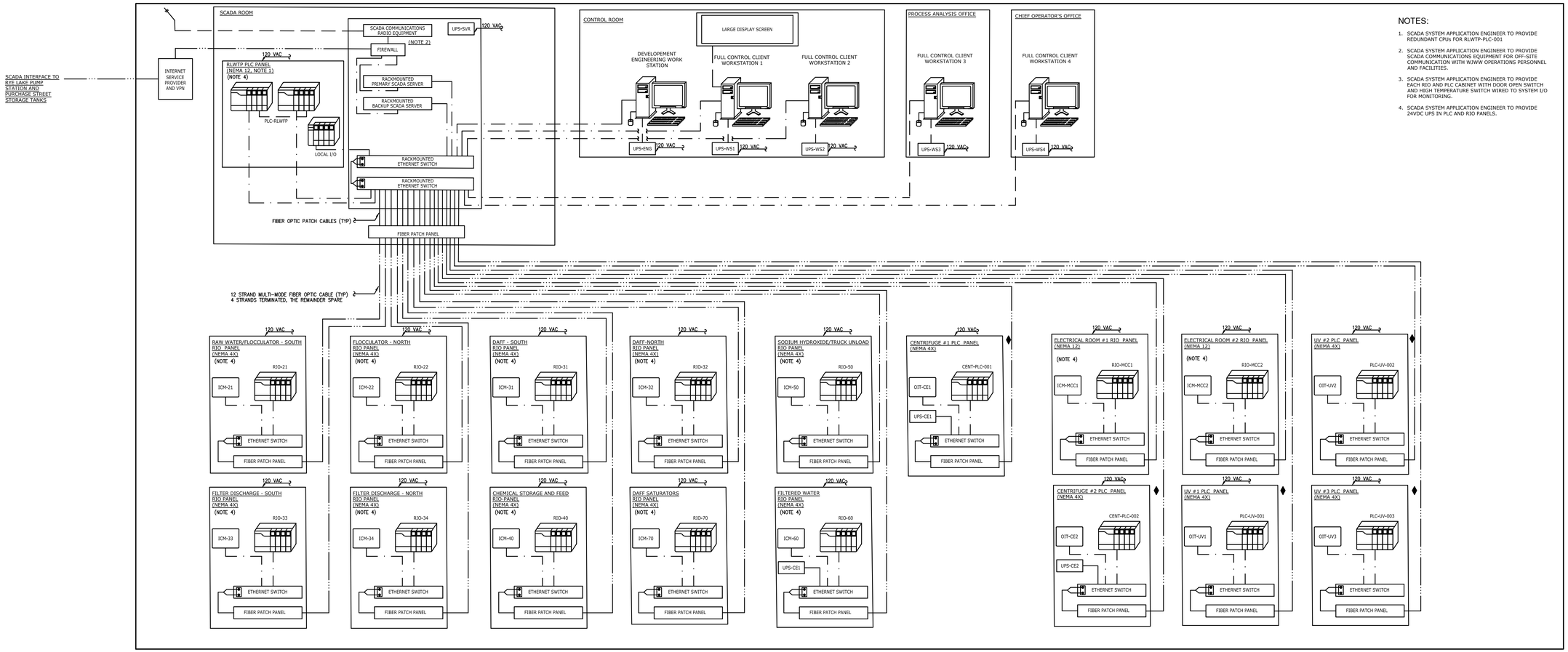

NOTES:

1. SCADA SYSTEM APPLICATION ENGINEER TO PROVIDE REDUNDANT CPUs FOR RLWTP-PLC-001
2. SCADA SYSTEM APPLICATION ENGINEER TO PROVIDE SCADA COMMUNICATIONS EQUIPMENT FOR OFF-SITE COMMUNICATION WITH WJWW OPERATIONS PERSONNEL AND FACILITIES.
3. SCADA SYSTEM APPLICATION ENGINEER TO PROVIDE EACH RIO AND PLC CABINET WITH DOOR OPEN SWITCH AND HIGH TEMPERATURE SWITCH WIRED TO SYSTEM I/O FOR MONITORING.
4. SCADA SYSTEM APPLICATION ENGINEER TO PROVIDE 24VDC UPS IN PLC AND RIO PANELS.

WARNING
IT IS A VIOLATION OF SECTION 7209.2 OF THE NEW YORK STATE EDUCATION LAW FOR ANY PERSON, UNLESS ACTING UNDER THE DIRECTION OF A LICENSED PROFESSIONAL ENGINEER, TO ALTER IN ANY WAY PLANS, SPECIFICATIONS, PLATS OR REPORTS TO WHICH THE SEAL OF A PROFESSIONAL ENGINEER HAS BEEN APPLIED. IF AN ITEM BEARING THE SEAL OF A PROFESSIONAL ENGINEER IS ALTERED, THE ALTERING ENGINEER SHALL AFFIX TO THE ITEM HIS SEAL AND THE NOTATION "ALTERED BY" FOLLOWED BY HIS SIGNATURE, THE DATE, AND A SPECIFIC DESCRIPTION OF THE ALTERATION.

REV	ISSUED FOR	DATE	BY

PROJECT ENGINEER: R. FROST
DESIGNED BY: F.BEATY
DRAWN BY: F.BEATY
CHECKED BY: G.MARKOU

IF THIS BAR DOES NOT MEASURE 1" THEN DRAWING IS NOT TO FULL SCALE (0, 1/2", 1")

BID SET

STATE OF NEW YORK — GEORGE MARKOU — 072603 — LICENSED PROFESSIONAL ENGINEER

Hazen
HAZEN AND SAWYER
498 SEVENTH AVENUE, 11th FLOOR
NEW YORK, NEW YORK 10018

WESTCHESTER JOINT WATER WORKS
MAMARONECK, NY

RYE LAKE WATER FILTRATION PLANT
HARRISON, NY

INSTRUMENTATION CONTROL SYSTEM BLOCK DIAGRAM

DATE: FEB 2025
HAZEN NO.: 90388-000
CONTRACT NO.: A1364-A
DRAWING NUMBER: I-002

File: C:\USERS\FBEATY\APPDATA\LOCAL\AUTODESK\AUTOCAD PLANT 3D\COLLABORATION\CACHE\RYE LAKE\PID DWG\I-002 Saved by FBEATY Save date: 1/31/2025 3:05 PM
PLOT DATE: 2/3/2025 1:38 PM BY: FBEATY

NOTES:

1. INTERFACE TO EXISTING RYE LAKE PUMP STATION AND EXISTING PURCHASE STREET TANKS BY CONTRACTOR.
2. SCADA COMMUNICATIONS LINK SHALL BE CONFIGURED TO INTEGRATE MULTIPLE COMMUNICATIONS PATHWAYS TO THE EXISTING SCADA SYSTEM.
3. AUXILIARY STATUS SIGNALS MAY BE UNI-DIRECTIONAL OR BI-DIRECTIONAL AS REQUIRED. TYPICAL AUXILIARY STATUS SIGNALS MAY INCLUDE: OPERATING MODE, OPERATING CONDITION, SIGNAL HEARTBEAT, READY TO OPERATE CONDITIONS, SHUTDOWN COMMANDS, STARTUP COMMANDS AND OTHER CONDITIONS AS NECESSARY TO COORDINATE THE OPERATION OF THE SYSTEM AS A WHOLE.

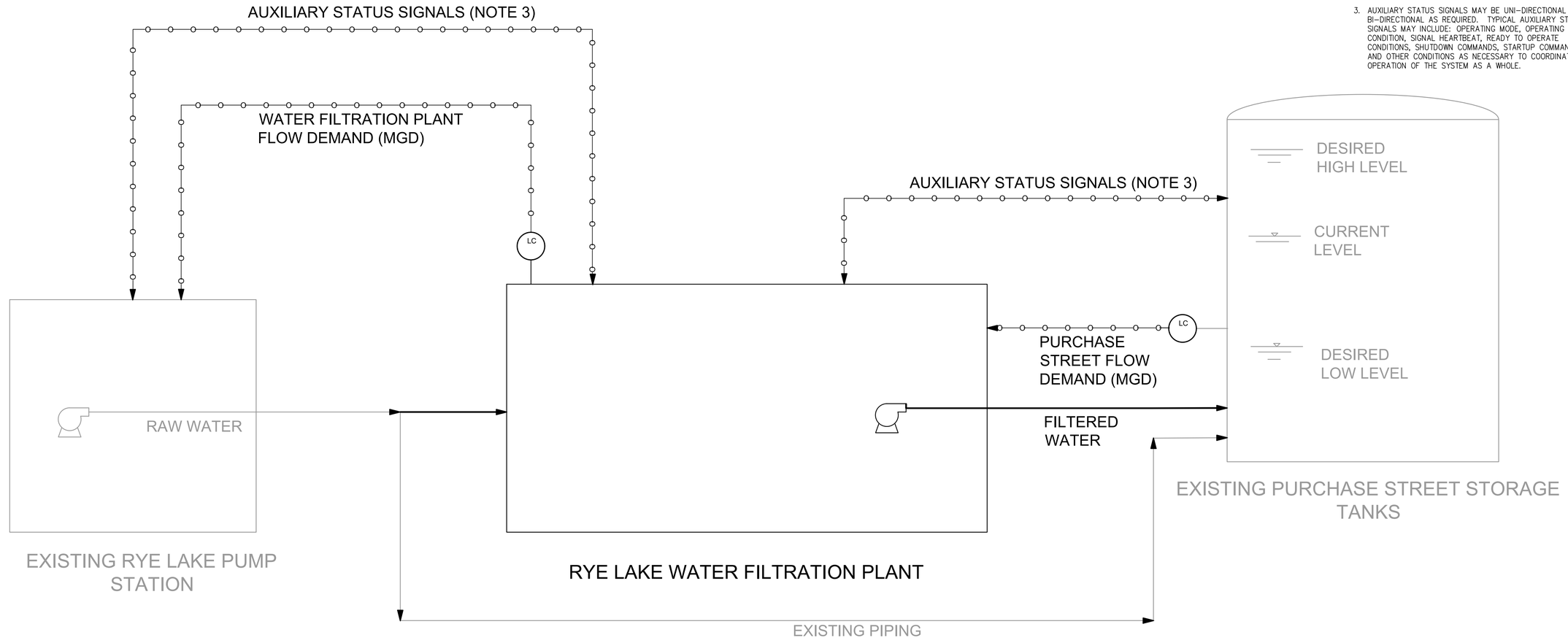

WARNING
IT IS A VIOLATION OF SECTION 7209.2 OF THE NEW YORK STATE EDUCATION LAW FOR ANY PERSON, UNLESS ACTING UNDER THE DIRECTION OF A LICENSED PROFESSIONAL ENGINEER, TO ALTER IN ANY WAY PLANS, SPECIFICATIONS, PLATS OR REPORTS TO WHICH THE SEAL OF A PROFESSIONAL ENGINEER HAS BEEN APPLIED. IF AN ITEM BEARING THE SEAL OF A PROFESSIONAL ENGINEER IS ALTERED, THE ALTERING ENGINEER SHALL AFFIX TO THE ITEM HIS SEAL AND THE NOTATION "ALTERED BY" FOLLOWED BY HIS SIGNATURE, THE DATE, AND A SPECIFIC DESCRIPTION OF THE ALTERATION.

REV	ISSUED FOR	DATE	BY

PROJECT ENGINEER: R. FROST
DESIGNED BY: F.BEATY
DRAWN BY: F.BEATY
CHECKED BY: G.MAKROU
IF THIS BAR DOES NOT MEASURE 1" THEN DRAWING IS NOT TO FULL SCALE 0 1/2" 1"

BID SET

STATE OF NEW YORK GEORGE MAKROU 072603 LICENSED PROFESSIONAL ENGINEER

Hazen

HAZEN AND SAWYER
498 SEVENTH AVENUE, 11th FLOOR
NEW YORK, NEW YORK 10018

WESTCHESTER JOINT WATER WORKS
MAMARONECK, NY

RYE LAKE WATER FILTRATION PLANT
HARRISON, NY

FACILITY SIGNAL COORDINATION
INSTRUMENTATION
PROCESS AND INSTRUMENT DIAGRAM

DATE:	FEB 2025
HAZEN NO.:	90388-000
CONTRACT NO.:	A1364-A
DRAWING NUMBER:	I-003

File: C:\USERS\FBEATY\APPDATA\LOCAL\AUTODESK\AUTOCAD PLANT 3D\COLLABORATION\CACHE\RYE LAKE\PID DWG\I-003 Saved by BWALLISCH Save date: 5/20/2024 3:30 PM
PLOT DATE: 2/3/2025 1:38 PM BY: FBEATY

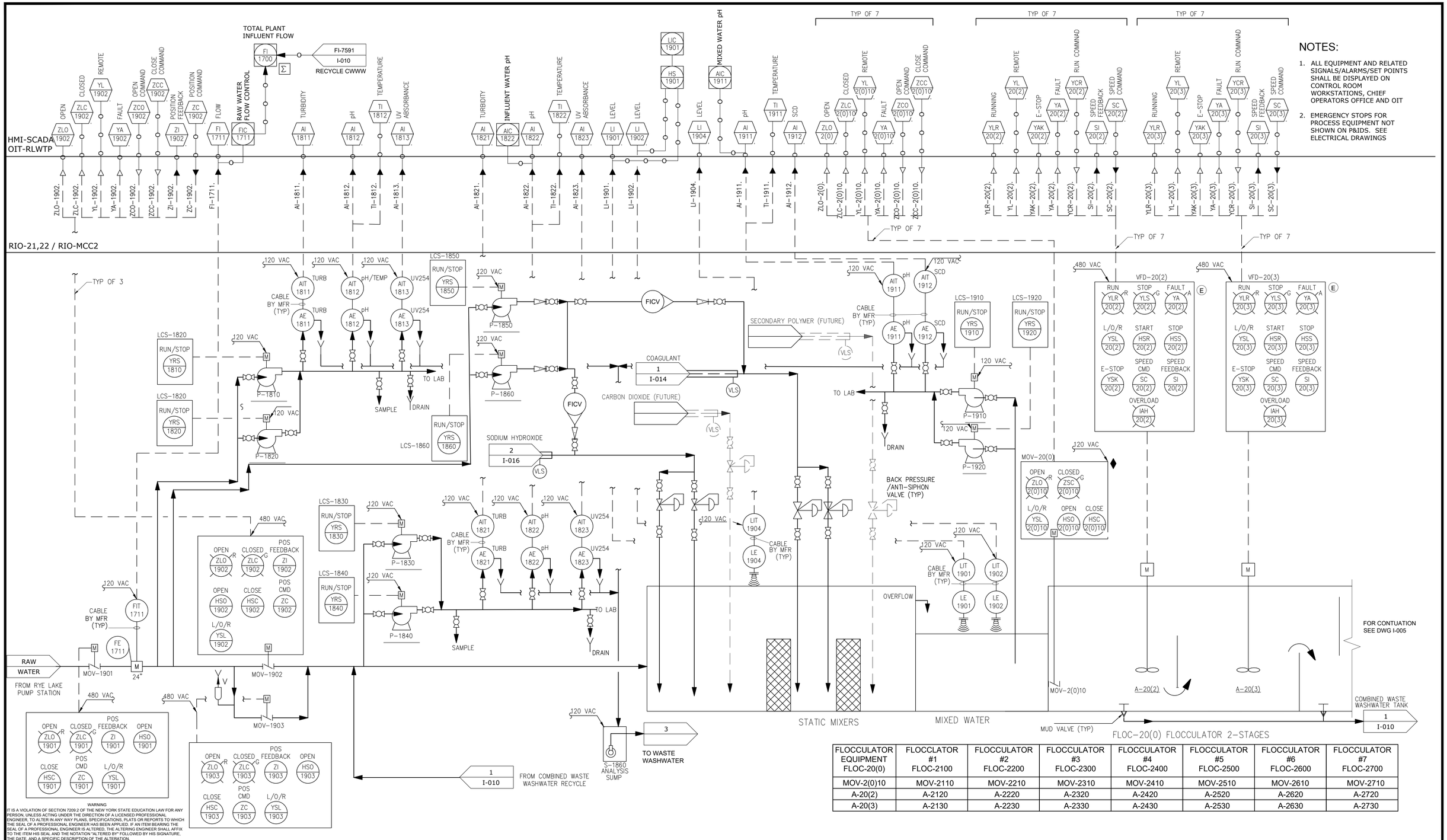

NOTES:

1. ALL EQUIPMENT AND RELATED SIGNALS/ALARMS/SET POINTS SHALL BE DISPLAYED ON CONTROL ROOM WORKSTATIONS, CHIEF OPERATORS OFFICE AND OIT
2. EMERGENCY STOPS FOR PROCESS EQUIPMENT NOT SHOWN ON P&IDS. SEE ELECTRICAL DRAWINGS

FLOCCULATOR EQUIPMENT FLOC-20(0)	FLOCCLATOR #1 FLOC-2100	FLOCCULATOR #2 FLOC-2200	FLOCCULATOR #3 FLOC-2300	FLOCCULATOR #4 FLOC-2400	FLOCCULATOR #5 FLOC-2500	FLOCCULATOR #6 FLOC-2600	FLOCCULATOR #7 FLOC-2700
MOV-2(0)10	MOV-2110	MOV-2210	MOV-2310	MOV-2410	MOV-2510	MOV-2610	MOV-2710
A-20(2)	A-2120	A-2220	A-2320	A-2420	A-2520	A-2620	A-2720
A-20(3)	A-2130	A-2230	A-2330	A-2430	A-2530	A-2630	A-2730

WARNING
IT IS A VIOLATION OF SECTION 7209.2 OF THE NEW YORK STATE EDUCATION LAW FOR ANY PERSON, UNLESS ACTING UNDER THE DIRECTION OF A LICENSED PROFESSIONAL ENGINEER, TO ALTER IN ANY WAY PLANS, SPECIFICATIONS, PLATS OR REPORTS TO WHICH THE SEAL OF A PROFESSIONAL ENGINEER HAS BEEN APPLIED. IF AN ITEM BEARING THE SEAL OF A PROFESSIONAL ENGINEER IS ALTERED, THE ALTERING ENGINEER SHALL AFFIX TO THE ITEM HIS SEAL AND THE NOTATION "ALTERED BY" FOLLOWED BY HIS SIGNATURE, THE DATE, AND A SPECIFIC DESCRIPTION OF THE ALTERATION.

REV	ISSUED FOR	DATE	BY

PROJECT ENGINEER:	R. FROST
DESIGNED BY:	F.BEATY
DRAWN BY:	F.BEATY
CHECKED BY:	G.MARKOU
IF THIS BAR DOES NOT MEASURE 1" THEN DRAWING IS NOT TO FULL SCALE	0 1/2" 1"

BID SET

STATE OF NEW YORK · GEORGE MARKOU · 072603 · LICENSED PROFESSIONAL ENGINEER

Hazen

HAZEN AND SAWYER
498 SEVENTH AVENUE, 11th FLOOR
NEW YORK, NEW YORK 10018

WESTCHESTER JOINT WATER WORKS
MAMARONECK, NY

RYE LAKE WATER FILTRATION PLANT
HARRISON, NY

MIXER AND FLOCCULATORS
INSTRUMENTATION
PROCESS AND INSTRUMENT DIAGRAM

DATE:	FEB 2025
HAZEN NO.:	90388-000
CONTRACT NO.:	A1364-A
DRAWING NUMBER:	I-004

File: C:\USERS\FBEATY\APPDATA\LOCAL\AUTODESK\AUTOCAD PLANT 3D\COLLABORATION\CACHE\RYE LAKE\PID DWG\I-004 MIXFLOCC Saved by BWALLISCH Save date: 5/20/2024 3:20 PM
PLOT DATE: 2/3/2025 1:38 PM BY: FBEATY

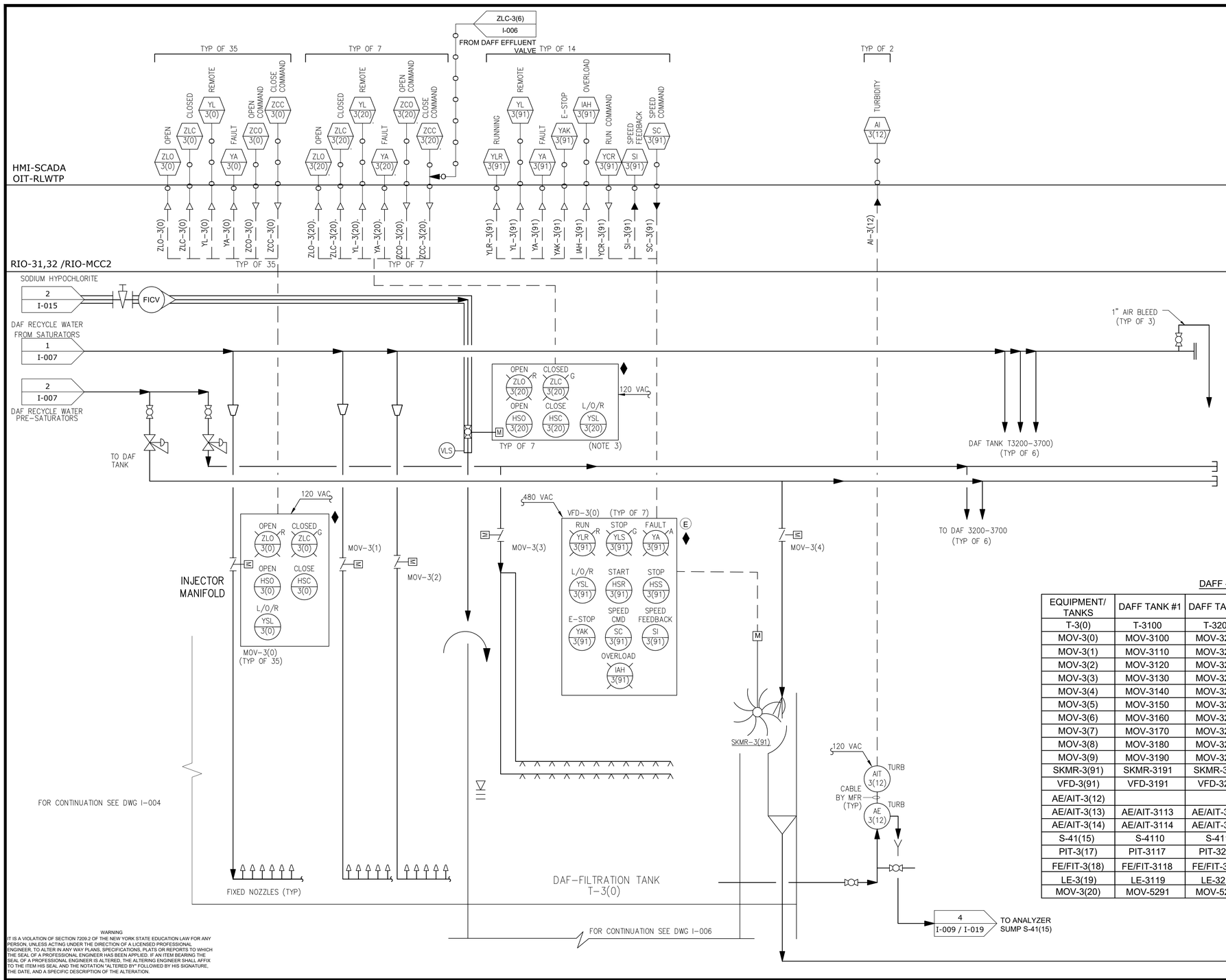

NOTES:

1. ALL EQUIPMENT AND RELATED SIGNALS/ALARMS/SET POINTS SHALL BE DISPLAYED ON CONTROL ROOM WORKSTATIONS, CHIEF OPERATORS OFFICE AND OIT
2. EMERGENCY STOPS FOR PROCESS EQUIPMENT NOT SHOWN ON P&IDS. SEE ELECTRICAL DRAWINGS
3. SODIUM HYPOCHRLORITE ADDITION VALVES (MOV-3(20)) SHOWN ON THIS SHEET FOR CONTEXT AND CLARIFY.

DAFF - EQUIPMENT SCHEDULE, SHEETS I-005, I-006, I-015

EQUIPMENT/ TANKS	DAFF TANK #1	DAFF TANK #2	DAFF TANK #3	DAFF TANK #4	DAFF TANK #5	DAFF TANK #6	DAFF TANK #7
T-3(0)	T-3100	T-3200	T-3300	T-3400	T-3500	T-3600	T-3700
MOV-3(0)	MOV-3100	MOV-3200	MOV-3300	MOV-3400	MOV-3500	MOV-3600	MOV-3700
MOV-3(1)	MOV-3110	MOV-3210	MOV-3310	MOV-3410	MOV-3510	MOV-3610	MOV-3710
MOV-3(2)	MOV-3120	MOV-3220	MOV-3320	MOV-3420	MOV-3520	MOV-3620	MOV-3720
MOV-3(3)	MOV-3130	MOV-3230	MOV-3330	MOV-3430	MOV-3530	MOV-3630	MOV-3730
MOV-3(4)	MOV-3140	MOV-3240	MOV-3340	MOV-3440	MOV-3540	MOV-3640	MOV-3740
MOV-3(5)	MOV-3150	MOV-3250	MOV-3350	MOV-3450	MOV-3550	MOV-3650	MOV-3750
MOV-3(6)	MOV-3160	MOV-3260	MOV-3360	MOV-3460	MOV-3560	MOV-3660	MOV-3760
MOV-3(7)	MOV-3170	MOV-3270	MOV-3370	MOV-3470	MOV-3570	MOV-3670	MOV-3770
MOV-3(8)	MOV-3180	MOV-3280	MOV-3380	MOV-3480	MOV-3580	MOV-3680	MOV-3780
MOV-3(9)	MOV-3190	MOV-3290	MOV-3390	MOV-3490	MOV-3590	MOV-3690	MOV-3790
SKMR-3(91)	SKMR-3191	SKMR-3291	SKMR-3391	SKMR-3491	SKMR-3591	SKMR-3691	SKMR-3791
VFD-3(91)	VFD-3191	VFD-3291	VFD-3391	VFD-3491	VFD-3591	VFD-3691	VFD-3791
AE/AIT-3(12)			AE/AIT-3312			AE/AIT-3612	
AE/AIT-3(13)	AE/AIT-3113	AE/AIT-3213	AE/AIT-3313	AE/AIT-3413	AE/AIT-3513	AE/AIT-3613	AE/AIT-3713
AE/AIT-3(14)	AE/AIT-3114	AE/AIT-3214	AE/AIT-3314	AE/AIT-3414	AE/AIT-3514	AE/AIT-3614	AE/AIT-3714
S-41(15)	S-4110	S-4110	S-4110	S-4110	S-4120	S-4120	S-4120
PIT-3(17)	PIT-3117	PIT-3217	PIT-3317	PIT-3417	PIT-3517	PIT-3617	PIT-3717
FE/FIT-3(18)	FE/FIT-3118	FE/FIT-3218	FE/FIT-3318	FE/FIT-3418	FE/FIT-3518	FE/FIT-3618	FE/FIT-3718
LE-3(19)	LE-3119	LE-3219	LE-3319	LE-3419	LE-3519	LE-3619	LE-3719
MOV-3(20)	MOV-5291	MOV-5292	MOV-5293	MOV-5294	MOV-5295	MOV-5296	MOV-5297

WARNING
IT IS A VIOLATION OF SECTION 7209.2 OF THE NEW YORK STATE EDUCATION LAW FOR ANY PERSON, UNLESS ACTING UNDER THE DIRECTION OF A LICENSED PROFESSIONAL ENGINEER, TO ALTER IN ANY WAY PLANS, SPECIFICATIONS, PLATS OR REPORTS TO WHICH THE SEAL OF A PROFESSIONAL ENGINEER HAS BEEN APPLIED. IF AN ITEM BEARING THE SEAL OF A PROFESSIONAL ENGINEER IS ALTERED, THE ALTERING ENGINEER SHALL AFFIX TO THE ITEM HIS SEAL AND THE NOTATION "ALTERED BY" FOLLOWED BY HIS SIGNATURE, THE DATE, AND A SPECIFIC DESCRIPTION OF THE ALTERATION.

REV	ISSUED FOR	DATE	BY

PROJECT ENGINEER: R. FROST
DESIGNED BY: F,BEATY
DRAWN BY: F.BEATY
CHECKED BY: G.MARKOU
IF THIS BAR DOES NOT MEASURE 1" THEN DRAWING IS NOT TO FULL SCALE 0 1/2" 1"

BID SET

STATE OF NEW YORK · GEORGE MARKOU · 072603 · LICENSED PROFESSIONAL ENGINEER

Hazen
HAZEN AND SAWYER
498 SEVENTH AVENUE, 11th FLOOR
NEW YORK, NEW YORK 10018

WESTCHESTER JOINT WATER WORKS
MAMARONECK, NY

RYE LAKE WATER FILTRATION PLANT
HARRISON, NY

DISSOLVED AIR FLOTATION (DAF) INSTRUMENTATION PROCESS AND INSTRUMENT DIAGRAM

DATE: FEB 2025
HAZEN NO.: 90388-000
CONTRACT NO.: A1364-A
DRAWING NUMBER: I-005

File: C:\USERS\FBEATY\APPDATA\LOCAL\AUTODESK\AUTOCAD PLANT 3D\COLLABORATION\CACHE\RYE LAKE\PID DWG\I-005 DAFF Saved by BWALLISCH Save date: 5/20/2024 3:27 PM
PLOT DATE: 2/3/2025 1:38 PM BY: FBEATY

HMI-SCADA
OIT- RLWTP
OIT-002

RIO-31,32,33,34,60 / RIO-MCC2

TYP OF 7 | TYP OF 7 | TYP OF 21 | TYP OF 5

LEVEL LI 3(19) — LI-3(19)
TURBIDITY AI 3(13) — AI-3(13)
CL AI 3(14) — AI-3(14)
PRESSURE PI 3(17) — PI-3(17)
OPEN ZLO 3(9) / CLOSED ZLC 3(9) / REMOTE YL 3(9) / FAULT YA 3(9) / OPEN COMMAND ZCO 3(9) / CLOSE COMMAND ZCC 3(9) — ZLO-3(9), ZLC-3(9), YL-3(9), YA-3(9), ZCO-3(9), ZCC-3(9)
FLOW FI 3(18) — FI-3(18)
OPEN ZLO 3(5) / CLOSED ZLC 3(5) / REMOTE YL 3(5) / FAULT YA 3(5) / OPEN COMMAND ZCO 3(5) / CLOSE COMMAND ZCC 3(5) — ZLO-3(5), ZLC-3(5), YL-3(5), YA-3(5), ZCO-3(5), ZCC-3(5)
OPEN ZLO 3(6) / CLOSED ZLC 3(6) / REMOTE YL 3(6) / FAULT YA 3(6) / OPEN COMMAND ZCO 3(6) / CLOSE COMMAND ZCC 3(6) / POSITION FEEDBACK ZI 3(6) / POSITION COMMAND ZC 3(6) — ZLO-3(6), ZLC-3(6), YL-3(6), YA-3(6), ZCO-3(6), ZCC-3(6), ZI-3(6), ZC-3(6)
FIC 3(18) — FIC-3(18)
LOW SUCTION PRESSURE PAL 7211 — PAL-7211
RUNNING YLR 7210 — YLR-7210
REMOTE YL 7210 — YL-7210
FAULT YA 7210 — YA-7210
E-STOP YAK 7210 — YAK-7210
RUN COMMAND YCR 7210 — YCR-7210
SPEED FEEDBACK SI 7210 — SI-7210
SPEED COMMAND SC 7210 — SC-7210
HIGH DISCHARGE PRESSURE PAH 7212 — PAH-7212
FIC 7370 — FIC-7370
HS 7370 — MODE
HX 7370 — 1:1
FI-7370 I-007 — FROM RECYCLE FLOW MEASUREMENT
FI-1711 I-004 — FROM RAW WATER FLOW MEASUREMENT

LT 3(19)

FOR CONTINUATION SEE DWG I-005
WASTE WASHWATER TROUGH

DAF TANK
T-03(0)

480 VAC — OPEN ZLO 3(5) / CLOSED ZLC 3(5) / OPEN HSO 3(5) / CLOSE HSC 3(5) / L/O/R YSL 3(5) — MOV-03(5) TYP OF 7

480 VAC — OPEN ZLO 3(9) / CLOSED ZLC 3(9) / OPEN HSO 3(9) / CLOSE HSC 3(9) / L/O/R YSL 3(9) — MOV-3(9) TYP OF 7 — AIR SCOUR 1 I-008

120 VAC — AIT 3(13) TURB — CABLE BY MFR (TYP) — AE 3(13) TURB
120 VAC — AIT 3(14) CL — CABLE BY MFR (TYP) — AE 3(14) CL
PIT 3(17) → 4 I-009 — TO ANALYZER SUMP S-41(15)

120 VAC — FIT 3(18) — CABLE BY MFR (TYP) — FE 3(18) — M 14"

480 VAC — OPEN ZLO 3(8) / CLOSED ZLC 3(8) / POS FEEDBACK ZI 3(8) / OPEN HSO 3(8) / CLOSE HSC 3(8) / POS CMD ZC 3(8) / L/O/R YSL 3(8) — MOV-3(8) TYP OF 7

480 VAC — OPEN ZLO 3(7) / CLOSED ZLC 3(7) / POS FEEDBACK ZI 3(7) / OPEN HSO 3(7) / CLOSE HSC 3(7) / POS CMD ZC 3(7) / L/O/R YSL 3(7) — MOV-3(7) TYP OF 7

480 VAC — OPEN ZLO 3(6) / CLOSED ZLC 3(6) / POS FEEDBACK ZI 3(6) / OPEN HSO 3(6) / CLOSE HSC 3(6) / POS CMD ZC 3(6) / L/O/R YSL 3(6) — MOV-3(6)

ZLC-3(6) I-005 — TO HYPOCHLORITE ADDITION VALVE

480 VAC — VFD-7210 (TYP OF 5) — RUN YLR 7210 / STOP YLS 7210 / FAULT YA 7210 / L/O/R YSL 7210 / RUN HSR 7210 / STOP HSS 7210 / E-STOP YSK 7210 / SPEED CMD SC 7210 / SPEED FEEDBACK SI 7210 / OVERLOAD IAH 7210

PSL 7211 / PG 7211 / PG 7212 / PSH 7212 — DAFR PUMP1 — P-7210
PSL 7221 / PG 7221 / PG 7222 / PSH 7222 — DAFR PUMP2 — P-7220
PSL 7231 / PG 7231 / PG 7232 / PSH 7232 — DAFR PUMP3 — P-7230
PSL 7241 / PG 7241 / PG 7342 / PSH 7342 — DAFR PUMP4 — P-7240
PSL 7251 / PG 7251 / PG 7252 / PSH 7252 — DAFR PUMP5 — P-7250

TO SATURATORS 1 I-007

FILTER TO WASTE WASHWATER TANKS 2 I-010

FROM FILTERS 2 TO 7

TYP OF 7 FROM BACKWASH PUMPS 2 I-009

TO FILTERED WATER TANKS 3 I-009

NOTES:

1. ALL EQUIPMENT AND RELATED SIGNALS/ALARMS/SET POINTS SHALL BE DISPLAYED ON CONTROL ROOM WORKSTATIONS, CHIEF OPERATORS OFFICE AND OIT.
2. EMERGENCY STOPS FOR PROCESS EQUIPMENT NOT SHOWN ON P&IDS. SEE ELECTRICAL DRAWINGS

WARNING
IT IS A VIOLATION OF SECTION 7209.2 OF THE NEW YORK STATE EDUCATION LAW FOR ANY PERSON, UNLESS ACTING UNDER THE DIRECTION OF A LICENSED PROFESSIONAL ENGINEER, TO ALTER IN ANY WAY PLANS, SPECIFICATIONS, PLATS OR REPORTS TO WHICH THE SEAL OF A PROFESSIONAL ENGINEER HAS BEEN APPLIED. IF AN ITEM BEARING THE SEAL OF A PROFESSIONAL ENGINEER IS ALTERED, THE ALTERING ENGINEER SHALL AFFIX TO THE ITEM HIS SEAL AND THE NOTATION "ALTERED BY" FOLLOWED BY HIS SIGNATURE, THE DATE, AND A SPECIFIC DESCRIPTION OF THE ALTERATION.

REV	ISSUED FOR	DATE	BY

PROJECT ENGINEER: R. FROST
DESIGNED BY: F.BEATY
DRAWN BY: F.BEATY
CHECKED BY: G.MARKOU
IF THIS BAR DOES NOT MEASURE 1" THEN DRAWING IS NOT TO FULL SCALE 0 1/2" 1"

BID SET

STATE OF NEW YORK · GEORGE MARKOU · 072603 · LICENSED PROFESSIONAL ENGINEER

Hazen
HAZEN AND SAWYER
498 SEVENTH AVENUE, 11th FLOOR
NEW YORK, NEW YORK 10018

WESTCHESTER JOINT WATER WORKS
MAMARONECK, NY

RYE LAKE WATER FILTRATION PLANT
HARRISON, NY

FILTERS AND DAF RECYCLE PUMPS INSTRUMENTATION PROCESS AND INSTRUMENT DIAGRAM

DATE: FEB 2025
HAZEN NO.: 90388-000
CONTRACT NO.: A1364-A
DRAWING NUMBER: I-006

File: C:\USERS\FBEATY\APPDATA\LOCAL\AUTODESK\AUTOCAD PLANT 3D\COLLABORATION\CACHE\RYE LAKE\P&ID DWG\I-006 DAFF2 Saved by BWALLISCH Save date: 5/20/2024 3:29 PM
PLOT DATE: 2/3/2025 1:38 PM BY: FBEATY

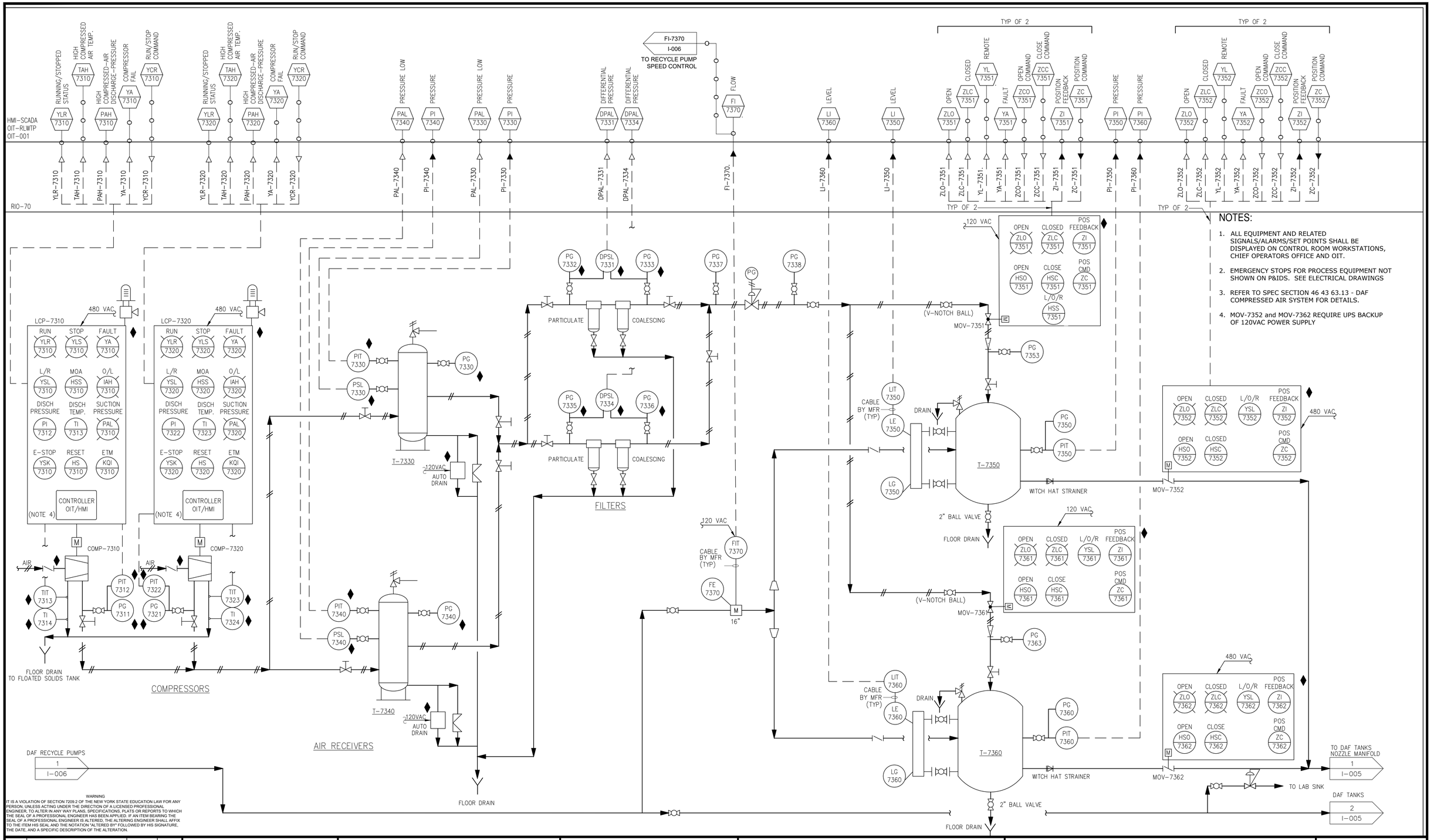

NOTES:

1. ALL EQUIPMENT AND RELATED SIGNALS/ALARMS/SET POINTS SHALL BE DISPLAYED ON CONTROL ROOM WORKSTATIONS, CHIEF OPERATORS OFFICE AND OIT.
2. EMERGENCY STOPS FOR PROCESS EQUIPMENT NOT SHOWN ON P&IDS. SEE ELECTRICAL DRAWINGS
3. REFER TO SPEC SECTION 46 43 63.13 - DAF COMPRESSED AIR SYSTEM FOR DETAILS.
4. MOV-7352 and MOV-7362 REQUIRE UPS BACKUP OF 120VAC POWER SUPPLY

WARNING
IT IS A VIOLATION OF SECTION 7209.2 OF THE NEW YORK STATE EDUCATION LAW FOR ANY PERSON, UNLESS ACTING UNDER THE DIRECTION OF A LICENSED PROFESSIONAL ENGINEER, TO ALTER IN ANY WAY PLANS, SPECIFICATIONS, PLATS OR REPORTS TO WHICH THE SEAL OF A PROFESSIONAL ENGINEER HAS BEEN APPLIED. IF AN ITEM BEARING THE SEAL OF A PROFESSIONAL ENGINEER IS ALTERED, THE ALTERING ENGINEER SHALL AFFIX TO THE ITEM HIS SEAL AND THE NOTATION "ALTERED BY" FOLLOWED BY HIS SIGNATURE, THE DATE, AND A SPECIFIC DESCRIPTION OF THE ALTERATION

REV	ISSUED FOR	DATE	BY

PROJECT ENGINEER:	R. FROST
DESIGNED BY:	F.BEATY
DRAWN BY:	F.BEATY
CHECKED BY:	G.MARKOU

IF THIS BAR DOES NOT MEASURE 1" THEN DRAWING IS NOT TO FULL SCALE (0 1/2" 1")

BID SET

STATE OF NEW YORK · GEORGE MARKOU · 072603 · LICENSED PROFESSIONAL ENGINEER

Hazen
HAZEN AND SAWYER
498 SEVENTH AVENUE, 11th FLOOR
NEW YORK, NEW YORK 10018

WESTCHESTER JOINT WATER WORKS
MAMARONECK, NY

RYE LAKE WATER FILTRATION PLANT
HARRISON, NY

DAF RECYCLE SATURATION SYSTEM INSTRUMENTATION PROCESS AND INSTRUMENT DIAGRAM

DATE:	FEB 2025
HAZEN NO.:	90388-000
CONTRACT NO.:	A1364-A
DRAWING NUMBER:	I-007

File: C:\USERS\FBEATY\APPDATA\LOCAL\AUTODESK\AUTOCAD PLANT 3D\COLLABORATION\CACHE\RYE LAKE\PID DWG\I-007 SATURATOR Saved by BWALLISCH Save date: 5/20/2024 11:19 AM
PLOT DATE: 2/3/2025 1:38 PM BY: FBEATY

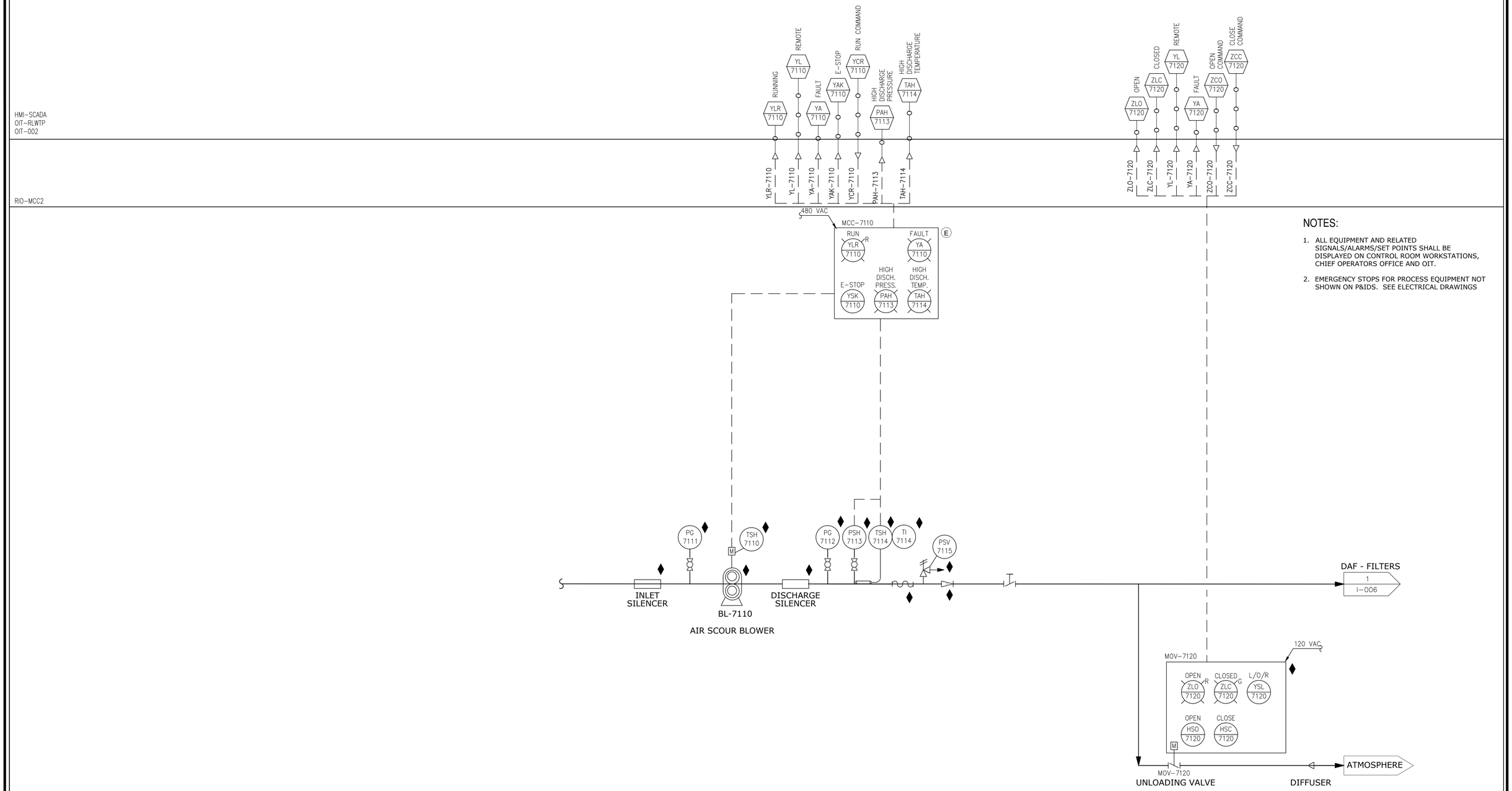

NOTES:

1. ALL EQUIPMENT AND RELATED SIGNALS/ALARMS/SET POINTS SHALL BE DISPLAYED ON CONTROL ROOM WORKSTATIONS, CHIEF OPERATORS OFFICE AND OIT.
2. EMERGENCY STOPS FOR PROCESS EQUIPMENT NOT SHOWN ON P&IDS. SEE ELECTRICAL DRAWINGS

WARNING
IT IS A VIOLATION OF SECTION 7209.2 OF THE NEW YORK STATE EDUCATION LAW FOR ANY PERSON, UNLESS ACTING UNDER THE DIRECTION OF A LICENSED PROFESSIONAL ENGINEER, TO ALTER IN ANY WAY PLANS, SPECIFICATIONS, PLATS OR REPORTS TO WHICH THE SEAL OF A PROFESSIONAL ENGINEER HAS BEEN APPLIED. IF AN ITEM BEARING THE SEAL OF A PROFESSIONAL ENGINEER IS ALTERED, THE ALTERING ENGINEER SHALL AFFIX TO THE ITEM HIS SEAL AND THE NOTATION "ALTERED BY" FOLLOWED BY HIS SIGNATURE, THE DATE, AND A SPECIFIC DESCRIPTION OF THE ALTERATION.

REV	ISSUED FOR	DATE	BY

PROJECT ENGINEER: R. FROST
DESIGNED BY: F.BEATY
DRAWN BY: F.BEATY
CHECKED BY: G.MARKOU
IF THIS BAR DOES NOT MEASURE 1" THEN DRAWING IS NOT TO FULL SCALE 0 1/2" 1"

BID SET

STATE OF NEW YORK · GEORGE MARKOU · 072603 · LICENSED PROFESSIONAL ENGINEER

Hazen
HAZEN AND SAWYER
498 SEVENTH AVENUE, 11th FLOOR
NEW YORK, NEW YORK 10018

WESTCHESTER JOINT WATER WORKS
MAMARONECK, NY

RYE LAKE WATER FILTRATION PLANT
HARRISON, NY

AIR SCOUR BLOWER SYSTEM INSTRUMENTATION PROCESS AND INSTRUMENT DIAGRAM

DATE: FEB 2025
HAZEN NO.: 90388-000
CONTRACT NO.: A1364-A
DRAWING NUMBER: I-008

File: C:\USERS\FBEATY\APPDATA\LOCAL\AUTODESK\AUTOCAD PLANT 3D\COLLABORATION\CACHE\RYE LAKE\PID DWG\I-008 AIR SCOUR Saved by BWALLISCH Save date: 5/20/2024 11:18 AM
PLOT DATE: 2/3/2025 1:38 PM BY: FBEATY

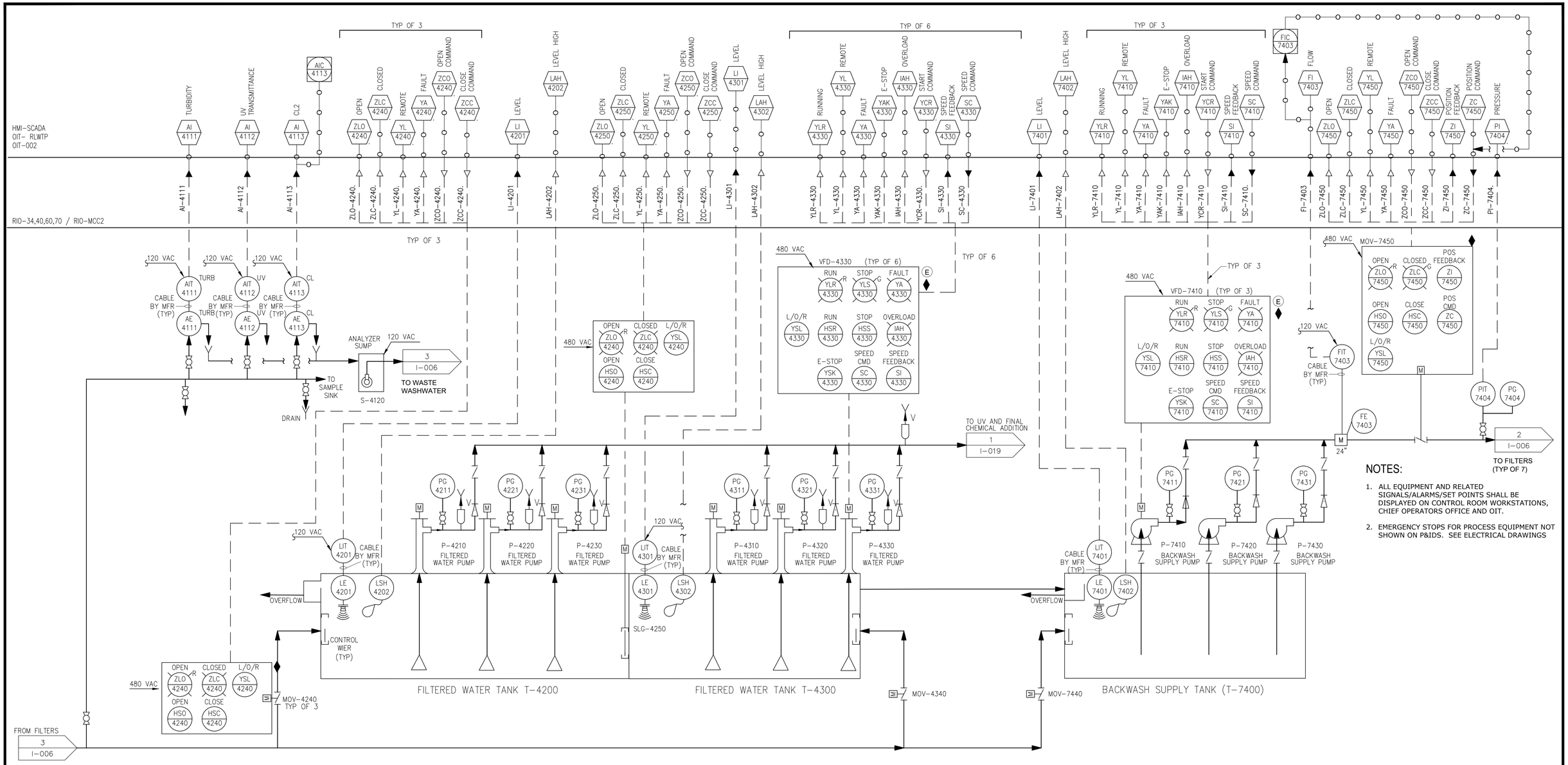

NOTES:

1. ALL EQUIPMENT AND RELATED SIGNALS/ALARMS/SET POINTS SHALL BE DISPLAYED ON CONTROL ROOM WORKSTATIONS, CHIEF OPERATORS OFFICE AND OIT.
2. EMERGENCY STOPS FOR PROCESS EQUIPMENT NOT SHOWN ON P&IDS. SEE ELECTRICAL DRAWINGS

WARNING
IT IS A VIOLATION OF SECTION 7209.2 OF THE NEW YORK STATE EDUCATION LAW FOR ANY PERSON, UNLESS ACTING UNDER THE DIRECTION OF A LICENSED PROFESSIONAL ENGINEER, TO ALTER IN ANY WAY PLANS, SPECIFICATIONS, PLATS OR REPORTS TO WHICH THE SEAL OF A PROFESSIONAL ENGINEER HAS BEEN APPLIED. IF AN ITEM BEARING THE SEAL OF A PROFESSIONAL ENGINEER IS ALTERED, THE ALTERING ENGINEER SHALL AFFIX TO THE ITEM HIS SEAL AND THE NOTATION "ALTERED BY" FOLLOWED BY HIS SIGNATURE, THE DATE, AND A SPECIFIC DESCRIPTION OF THE ALTERATION.

REV	ISSUED FOR	DATE	BY

PROJECT ENGINEER: R. FROST
DESIGNED BY: F.BEATY
DRAWN BY: F.BEATY
CHECKED BY: G.MARKOU
IF THIS BAR DOES NOT MEASURE 1" THEN DRAWING IS NOT TO FULL SCALE (0 1/2" 1")

BID SET

STATE OF NEW YORK · GEORGE MARKOU · 072603 · REGISTERED PROFESSIONAL ENGINEER

Hazen
HAZEN AND SAWYER
498 SEVENTH AVENUE, 11th FLOOR
NEW YORK, NEW YORK 10018

WESTCHESTER JOINT WATER WORKS
MAMARONECK, NY

RYE LAKE WATER FILTRATION PLANT
HARRISON, NY

FILTERED WATER AND BACKWASH SYSTEM INSTRUMENTATION PROCESS AND INSTRUMENT DIAGRAM

DATE: FEB 2025
HAZEN NO.: 90388-000
CONTRACT NO.: A1364-A
DRAWING NUMBER: I-009

File: C:\USERS\FBEATY\APPDATA\LOCAL\AUTODESK\AUTOCAD PLANT 3D\COLLABORATION\CACHE\RYE LAKE\PID DWGS\I-009 FILTEREDWTR Saved by BWALLISCH Save date: 5/20/2024 11:17 AM
PLOT DATE: 2/3/2025 1:38 PM BY: FBEATY

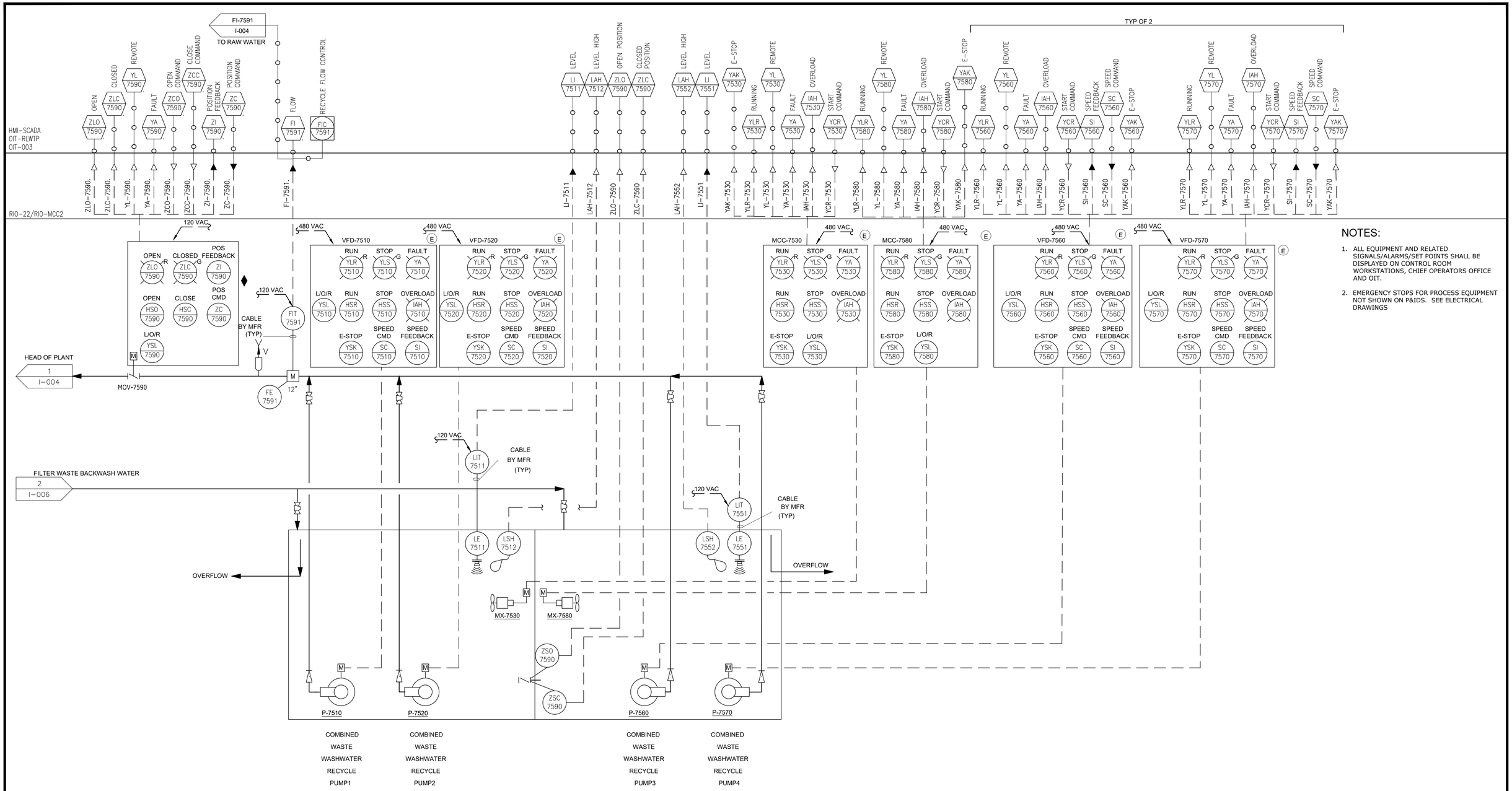

NOTES:

1. ALL EQUIPMENT AND RELATED SIGNALS/ALARMS/SET POINTS SHALL BE DISPLAYED ON CONTROL ROOM WORKSTATIONS, CHIEF OPERATORS OFFICE AND OIT.
2. EMERGENCY STOPS FOR PROCESS EQUIPMENT NOT SHOWN ON P&IDS. SEE ELECTRICAL DRAWINGS

WARNING
IT IS A VIOLATION OF SECTION 7209.2 OF THE NEW YORK STATE EDUCATION LAW FOR ANY PERSON, UNLESS ACTING UNDER THE DIRECTION OF A LICENSED PROFESSIONAL ENGINEER, TO ALTER IN ANY WAY PLANS, SPECIFICATIONS, PLATS OR REPORTS TO WHICH THE SEAL OF A PROFESSIONAL ENGINEER HAS BEEN APPLIED. IF AN ITEM BEARING THE SEAL OF A PROFESSIONAL ENGINEER IS ALTERED, THE ALTERING ENGINEER SHALL AFFIX TO THE ITEM HIS SEAL AND THE NOTATION "ALTERED BY" FOLLOWED BY HIS SIGNATURE, THE DATE, AND A SPECIFIC DESCRIPTION OF THE ALTERATION.

REV	ISSUED FOR	DATE	BY

PROJECT ENGINEER: R. FROST
DESIGNED BY: F.BEATY
DRAWN BY: F.BEATY
CHECKED BY: G.MARKOU
IF THIS BAR DOES NOT MEASURE 1" THEN DRAWING IS NOT TO FULL SCALE 0 1/2" 1"

BID SET

STATE OF NEW YORK · GEORGE MARKOU · 072603 · LICENSED PROFESSIONAL ENGINEER

Hazen
HAZEN AND SAWYER
498 SEVENTH AVENUE, 11th FLOOR
NEW YORK, NEW YORK 10018

WESTCHESTER JOINT WATER WORKS
MAMARONECK, NY

RYE LAKE WATER FILTRATION PLANT
HARRISON, NY

COMBINED WASTE WASHWATER SYSTEM INSTRUMENTATION PROCESS AND INSTRUMENT DIAGRAM

DATE: FEB 2025
HAZEN NO.: 90388-000
CONTRACT NO.: A1364-A
DRAWING NUMBER: I-010

File: C:\USERS\FBEATY\APPDATA\LOCAL\AUTODESK\AUTOCAD PLANT 3D\COLLABORATION\CACHE\RYE LAKE\P&ID DWG\I-010 CWWW Saved by BWALLISCH Save date: 5/20/2024 10:58 AM
PLOT DATE: 2/3/2025 1:39 PM BY: FBEATY

HMI-SCADA
OIT-RLWTP
OIT-006

PLC-RLWFP/RIO-70/RIO-MCC1

ZLO-6101. ZLC-6101. YL-6101. YA-6101. ZCO-6101. ZCC-6101. LI-6111

YLR-6120 YL-6120 YA-6120 IAH-6120 YCR-6120 YAK-6120

PAL-6121

YLR-6130 YL-6130 YA-6130 IAH-6130 YCR-6130 YAK-6130

IAH-6122

LI-6251

LI-6211

YLR-6220 YL-6220 YA-6220 YAK-6220 YCR-6220

YLR-6260 YL-6260 YA-6260 YAK-6260 YCR-6260 PAL-6221

IAH-6222

(TYP OF 4)

(TYP OF 4)

MCC-6120 480 VAC
RUN YLR 6120 | STOP YLS 6120 | FAULT YA 6120
RUN HSR 6120 | STOP HSS 6120 | OVERLOAD IAH 6120
L/O/R YSL 6120 | E-STOP YSK 6120

MCC-6130 480 VAC
RUN YLR 6130 | STOP YLS 6130 | FAULT YA 6130
RUN HSR 6130 | STOP HSS 6130 | OVERLOAD IAH 6130
L/O/R YSL 6130 | E-STOP YSK 6130

MCC-6220 480 VAC
RUN YLR 6220 | STOP YLS 6220 | FAULT YA 6220
RUN HSR 6220 | STOP HSS 6220
L/O/R YSL 6220 | E-STOP YSK 6220

MCC-6260 480 VAC
RUN YLR 6260 | STOP YLS 6260 | FAULT YA 6260
RUN HSR 6260 | STOP HSS 6260
L/O/R YSL 6260 | E-STOP YSK 6260

MCC-6230 480 VAC
RUN YLR 6230 | STOP YLS 6230 | FAULT YA 6230
RUN HSR 6230 | STOP HSS 6230 | OVERLOAD IAH 6230
L/O/R YSL 6230 | E-STOP YSK 6230
SPEED FEEDBACK SI 6230 | SPEED COMMAND SC 6230
VFD-6230 (NOTE 2, 3)

MCC-6270 480 VAC
RUN YLR 6270 | STOP YLS 6270 | FAULT YA 6270
RUN HSR 6270 | STOP HSS 6270 | OVERLOAD IAH 6270
L/O/R YSL 6270 | E-STOP YSK 6270
SPEED FEEDBACK SI 6270 | SPEED COMMAND SC 6270
VFD-6270 (NOTE 2, 3)

480 VAC
OPEN ZLO 6101 | CLOSED ZLC 6101 | L/O/R YSL 6101
OPEN HSO 6101 | CLOSE HSC 6101
M

1 I-005

MOV-6101

DAFF FLOATED SOLIDS

T-6110

FLOATED SOLIDS BUFFER TANK

LIT 6111

PG 6121 PSL 6121 — M — P-6120
PG 6122 PSL 6122

PG 6131 PSL 6231 — M — P-6130
PG 6132 PSL 6232

FLOATED SOLIDS TRANSFER PUMPS

120 VAC
LIT 6211
CABLE BY MFR (TYP)
LE 6211

TELESCOPING VAVLE

T-6210

RESIDUALS STORAGE TANK 1

120 VAC
LIT 6251
CABLE BY MFR (TYP)
LE 6251

TELESCOPING VAVLE

T-6250

RESIDUALS STORAGE TANK 2

4 I-021 TO SEWER

PG 6221 PSL 6221 — M — PG 6222 PSH 6222
P-6220 RESIDUALS STORAGE MIXING PUMP 1

PG 6231 PSL 6231 — M — PG 6232 PSH 6232
P-6230 DEWATERING FEED PUMP 1

PG 6261 PSL 6261 — M — PG 6262 PSH 6262
P-6260 RESIDUALS STORAGE MIXING PUMP 2

PG 6271 PSL 6271 — M — PG 6272 PSH 6272
P-6270 DEWATERING FEED PUMP 2

TO / FROM CENTRIFUGE #2 3 I-012

TO / FROM CENTRIFUGE #1 2 I-012

TO SEWER 2 I-021

TO DEWATERING 1 I-012

NOTES:

1. ALL EQUIPMENT AND RELATED SIGNALS/ALARMS/SET POINTS SHALL BE DISPLAYED ON CONTROL ROOM WORKSTATIONS, CHIEF OPERATORS OFFICE AND OIT.
2. DEWATERING PUMPS No. 1 AND 2 CONTROLLED ON/OFF AND SPEED BY CENTRIFUGES No. 1 AND 2 AS REQUIRED BY THEIR PROPER OPERATION. SEE SPECIFICATION SECTION 40 76 33 FOR CONTROL DESCRIPTION.
3. DEWATERING PUMPS INTERLOCK TO STOP ON LOW SUCTION PRESSURE OR HIGH DISCHARGE PRESSURE.
4. EMERGENCY STOPS FOR PROCESS EQUIPMENT NOT SHOWN ON P&IDS. SEE ELECTRICAL DRAWINGS

WARNING
IT IS A VIOLATION OF SECTION 7209.2 OF THE NEW YORK STATE EDUCATION LAW FOR ANY PERSON, UNLESS ACTING UNDER THE DIRECTION OF A LICENSED PROFESSIONAL ENGINEER, TO ALTER IN ANY WAY PLANS, SPECIFICATIONS, PLATS OR REPORTS TO WHICH THE SEAL OF A PROFESSIONAL ENGINEER HAS BEEN APPLIED. IF AN ITEM BEARING THE SEAL OF A PROFESSIONAL ENGINEER IS ALTERED, THE ALTERING ENGINEER SHALL AFFIX TO THE ITEM HIS SEAL AND THE NOTATION "ALTERED BY" FOLLOWED BY HIS SIGNATURE, THE DATE, AND A SPECIFIC DESCRIPTION OF THE ALTERATION.

REV	ISSUED FOR	DATE	BY

PROJECT ENGINEER: R. FROST
DESIGNED BY: F.BEATY
DRAWN BY: F.BEATY
CHECKED BY: G.MARKOU
IF THIS BAR DOES NOT MEASURE 1" THEN DRAWING IS NOT TO FULL SCALE 0 1/2" 1"

BID SET

STATE OF NEW YORK · GEORGE MARKOU · 072603 · LICENSED PROFESSIONAL ENGINEER

Hazen

HAZEN AND SAWYER
498 SEVENTH AVENUE, 11th FLOOR
NEW YORK, NEW YORK 10018

WESTCHESTER JOINT WATER WORKS
MAMARONECK, NY

RYE LAKE WATER FILTRATION PLANT
HARRISON, NY

FLOATED SOLIDS TRANSFER SYSTEM
INSTRUMENTATION
PROCESS AND INSTRUMENT DIAGRAM

DATE: FEB 2025
HAZEN NO.: 90388-000
CONTRACT NO.: A1364-A
DRAWING NUMBER: I-011

File: C:\USERS\FBEATY\APPDATA\LOCAL\AUTODESK\AUTOCAD PLANT 3D\COLLABORATION\CACHE\RYE LAKE\PID DWG\I-011 FLOATEDSOLIDS Saved by BWALLISCH Save date: 5/20/2024 10:59 AM
PLOT DATE: 2/3/2025 1:39 PM BY: FBEATY

DEWATERING PUMPS | CENTRIFUGE #1 | CENTRIFUGE #2 | RESIDUALS CONVEYOR

HMI-SCADA
OIT-RLWTP
OIT-006

FI-6321 FI-6311 YLR-6230 YA-6230 SI-6230 YL-6230 YLS-6270 YA-6270 SI-6270 YL-6270 YLR-6310 YA-6310 YAK-6310 HLK-6310 YCS-6310 YCX-6310 YLR-6330 YA-6330 YLR-6320 YA-6320 YAK-6320 HLK-6320 YCS-6320 YCX-6320 YLR-6340 YA-6340 YL-6410 YLR-6410 YLS-6410 YA-6410

RACK MOUNTED FIBER PATCH PANEL (NOTE 4)

FIBER OPTIC CONNECTION TO SCADA NETWORK

TO/FROM POLYMER SKID (NOTE 3)
3
I-020

EMULSION POLYMER
1
I-020

TO/FROM DEWATERING PUMPS (NOTE 3)
1
I-011

DEWATERING FEED PUMPS
1
I-011

FLUSH WATER
1
P-002

MOV-6310

FIT 6311 — 120VAC — CABLE BY MFR (TYP)

FE 6311

3"

(NOTE 3)
CONTROL PANEL (CCP-6310)
E-STOP YSK 6310
RESET HSN 6310
SILENCE XSN 6310
POWER JL 6310
CENT-PLC-001
OIT-CE1
UPS-CE1
ETHERNET SWITCH
FIBER PATCH PANEL
S/S HS 6310

TT 6310 VT 6310 TE 6310 VE 6310

CENTRIFUGE UNIT 1
PRIMARY MOTOR CENT-6310
SECONDARY MOTOR CENT-6315

POWER PANEL (CPP) — 480VAC

CONTROL SIGNALS TO/FROM RESIDUAL CONVEYORS (NOTE 3)
1
I-013

TO SEWER
1
I-021

TO RESIDUALS TRANSPORT CONVEYOR #1
2
I-013

TO/FROM POLYMER SKID (NOTE 3)
4
I-020

EMULSION POLYMER
2
I-020

TO/FROM
DEWATERING PUMPS (NOTE 3)
3
I-011

MOV-6320

FIT 6321 — 120VAC — CABLE BY MFR (TYP)

FE 6321

3"

(NOTE 3)
CONTROL PANEL(CCP-6320)
E-STOP YSK 6320
RESET HSN 6320
SILENCE XSN 6320
POWER JL 6320
CENT-PLC-002
OIT-CE2
UPS-CE2
ETHERNET SWITCH
FIBER PATCH PANEL
S/S HS 6320

TT 6320 VT 6320 TE 6320 VE 6320

CENTRIFUGE UNIT 2
PRIMARY MOTOR CENT-6320
SECONDARY MOTOR CENT-6325

POWER PANEL (CPP) — 480VAC

TO RESIDUALS TRANSPORT CONVEYOR #1
3
I-013

TRUCK LOADING STATION

NOTES:

1. ALL EQUIPMENT AND RELATED SIGNALS/ALARMS/SET POINTS SHALL BE DISPLAYED ON CONTROL ROOM WORKSTATIONS, CHIEF OPERATORS OFFICE AND OIT.
2. EMERGENCY STOPS FOR PROCESS EQUIPMENT NOT SHOWN ON P&IDS. SEE ELECTRICAL DRAWINGS
3. CENTRIFUGE PLC PROVIDES ON/OFF AND/OR SPEED CONTROL FOR DEWATERING FEED PUMPS AND DISCHARGE CONVEYOR AS WELL AS SEQUENCE CONTROL FOR POLYMER SKID. SEE SPECIFICATION SECTION 46 75 33 FOR CONTROL DESCRIPTION.
4. REFER TO DRAWING I-002 FOR RACK MOUNTED FIBER PATCH PANEL AND CONNECTIONS TO SCADA SYSTEM.

WARNING
IT IS A VIOLATION OF SECTION 7209.2 OF THE NEW YORK STATE EDUCATION LAW FOR ANY PERSON, UNLESS ACTING UNDER THE DIRECTION OF A LICENSED PROFESSIONAL ENGINEER, TO ALTER IN ANY WAY PLANS, SPECIFICATIONS, PLATS OR REPORTS TO WHICH THE SEAL OF A PROFESSIONAL ENGINEER HAS BEEN APPLIED. IF AN ITEM BEARING THE SEAL OF A PROFESSIONAL ENGINEER IS ALTERED, THE ALTERING ENGINEER SHALL AFFIX TO THE ITEM HIS SEAL AND THE NOTATION "ALTERED BY" FOLLOWED BY HIS SIGNATURE, THE DATE, AND A SPECIFIC DESCRIPTION OF THE ALTERATION.

REV	ISSUED FOR	DATE	BY

PROJECT ENGINEER: R. FROST
DESIGNED BY: F.BEATY
DRAWN BY: F.BEATY
CHECKED BY: G.MARKOU
IF THIS BAR DOES NOT MEASURE 1" THEN DRAWING IS NOT TO FULL SCALE 0 1/2" 1"

BID SET

STATE OF NEW YORK — GEORGE MARKOU — 072603 — REGISTERED PROFESSIONAL ENGINEER

Hazen

HAZEN AND SAWYER
498 SEVENTH AVENUE, 11th FLOOR
NEW YORK, NEW YORK 10018

WESTCHESTER JOINT WATER WORKS
MAMARONECK, NY

RYE LAKE WATER FILTRATION PLANT
HARRISON, NY

DEWATERING CENTRIFUGE INSTRUMENTATION PROCESS AND INSTRUMENT DIAGRAM

DATE: FEB 2025
HAZEN NO.: 90388-000
CONTRACT NO.: A1364-A
DRAWING NUMBER: I-012

File: C:\USERS\FBEATY\APPDATA\LOCAL\AUTODESK\AUTOCAD PLANT 3D\COLLABORATION\CACHERYE LAKE\PID DWG\I-012 CENTRIFUGE Saved by BWALLISCH Save date: 5/20/2024 11:00 AM
PLOT DATE: 2/3/2025 1:39 PM BY: FBEATY

HMI–SCADA
OIT–RLWTP
OIT–002

RIO–60

TO DEWATERING CENTRIFUGES
1
I–012

FROM CENTRIFUGE #1
2
I–012

FROM CENTRIFUGE #2
3
I–012

480VAC
M
YSK 6420
RESIDUALS TRANSPORT CONVEYOR #1
CONV-6420

480VAC
M
YSK 6430
RESIDUALS TRANSPORT CONVEYOR #2
CONV-6430
SSL 6431

480VAC
CONTROL PANEL
(NOTE 3) LCP–6400
HAND OFF AUTO
E–STOP YSK 6400
HOA 6400
FAULT YA 6400

480VAC
M
YSK 6440
RESIDUALS DISTRIBUTION CONVEYOR
CONV-6440
SSL 6441

SLG-6460

120 VAC
CABLE BY MFR (TYP)
LIT 6412
LE 6412

120 VAC
CABLE BY MFR (TYP)
LIT 6413
LE 6413

120 VAC
CABLE BY MFR (TYP)
LIT 6414
LE 6414

RESIDUALS SLUDGE TRAILER

TO SEWER
3
I–021

RESIDUALS SAFETY SHOWER
FAH 6401
FAH–6401.

120VAC
FSH 6401
POTABLE WATER
INSIDE CONTAINMENT

NOTES:

1. ALL EQUIPMENT AND RELATED SIGNALS/ALARMS/SET POINTS SHALL BE DISPLAYED ON CONTROL ROOM WORKSTATIONS, CHIEF OPERATORS OFFICE AND OIT.
2. EMERGENCY STOPS FOR PROCESS EQUIPMENT NOT SHOWN ON P&IDS. SEE ELECTRICAL DRAWINGS
3. CENTRIFUGE PLC PROVIDES ON/OFF CONTROL FOR TRANSPORT AND DISTRIBUTION CONVEYORS.

WARNING
IT IS A VIOLATION OF SECTION 7209.2 OF THE NEW YORK STATE EDUCATION LAW FOR ANY PERSON, UNLESS ACTING UNDER THE DIRECTION OF A LICENSED PROFESSIONAL ENGINEER, TO ALTER IN ANY WAY PLANS, SPECIFICATIONS, PLATS OR REPORTS TO WHICH THE SEAL OF A PROFESSIONAL ENGINEER HAS BEEN APPLIED. IF AN ITEM BEARING THE SEAL OF A PROFESSIONAL ENGINEER IS ALTERED, THE ALTERING ENGINEER SHALL AFFIX TO THE ITEM HIS SEAL AND THE NOTATION "ALTERED BY" FOLLOWED BY HIS SIGNATURE, THE DATE, AND A SPECIFIC DESCRIPTION OF THE ALTERATION.

REV	ISSUED FOR	DATE	BY

PROJECT ENGINEER: R. FROST
DESIGNED BY: F.BEATY
DRAWN BY: F.BEATY
CHECKED BY: G.MARKOU
IF THIS BAR DOES NOT MEASURE 1" THEN DRAWING IS NOT TO FULL SCALE 0 1/2" 1"

BID SET

STATE OF NEW YORK · GEORGE MARKOU · 072603 · LICENSED PROFESSIONAL ENGINEER

Hazen
HAZEN AND SAWYER
498 SEVENTH AVENUE, 11th FLOOR
NEW YORK, NEW YORK 10018

WESTCHESTER JOINT WATER WORKS
MAMARONECK, NY

RYE LAKE WATER FILTRATION PLANT
HARRISON, NY

RESIDUALS HANDLING SYSTEM INSTRUMENTATION PROCESS AND INSTRUMENT DIAGRAM

DATE: FEB 2025
HAZEN NO.: 90388-000
CONTRACT NO.: A1364-A
DRAWING NUMBER: I-013

File: C:\USERS\FBEATY\APPDATA\LOCAL\AUTODESK\AUTOCAD PLANT 3D\COLLABORATION\CACHE\RYE LAKE\PID DWG\I-013 SOLIDSHANDLE Saved by BWALLISCH Save date: 5/20/2024 11:02 AM
PLOT DATE: 2/3/2025 1:39 PM BY: FBEATY

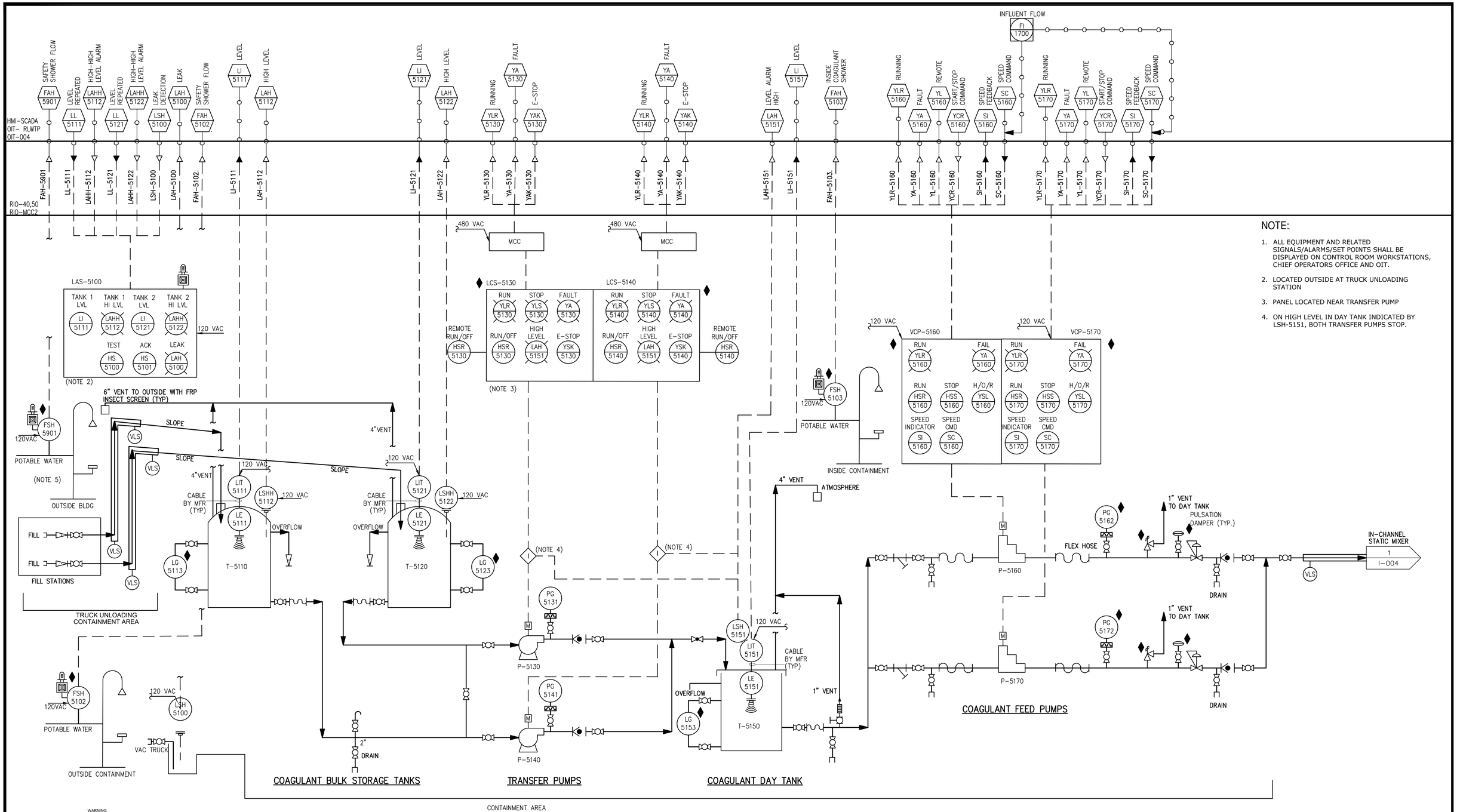

NOTE:

1. ALL EQUIPMENT AND RELATED SIGNALS/ALARMS/SET POINTS SHALL BE DISPLAYED ON CONTROL ROOM WORKSTATIONS, CHIEF OPERATORS OFFICE AND OIT.
2. LOCATED OUTSIDE AT TRUCK UNLOADING STATION
3. PANEL LOCATED NEAR TRANSFER PUMP
4. ON HIGH LEVEL IN DAY TANK INDICATED BY LSH-5151, BOTH TRANSFER PUMPS STOP.

WARNING
IT IS A VIOLATION OF SECTION 7209.2 OF THE NEW YORK STATE EDUCATION LAW FOR ANY PERSON, UNLESS ACTING UNDER THE DIRECTION OF A LICENSED PROFESSIONAL ENGINEER, TO ALTER IN ANY WAY PLANS, SPECIFICATIONS, PLATS OR REPORTS TO WHICH THE SEAL OF A PROFESSIONAL ENGINEER HAS BEEN APPLIED. IF AN ITEM BEARING THE SEAL OF A PROFESSIONAL ENGINEER IS ALTERED, THE ALTERING ENGINEER SHALL AFFIX TO THE ITEM HIS SEAL AND THE NOTATION "ALTERED BY" FOLLOWED BY HIS SIGNATURE, THE DATE, AND A SPECIFIC DESCRIPTION OF THE ALTERATION.

REV	ISSUED FOR	DATE	BY

PROJECT ENGINEER:	R. FROST
DESIGNED BY:	F.BEATY
DRAWN BY:	F.BEATY
CHECKED BY:	G.MARKOU

IF THIS BAR DOES NOT MEASURE 1" THEN DRAWING IS NOT TO FULL SCALE (0, 1/2", 1")

BID SET

STATE OF NEW YORK · GEORGE MARKOU · 072603 · REGISTERED PROFESSIONAL ENGINEER

Hazen

HAZEN AND SAWYER
498 SEVENTH AVENUE, 11th FLOOR
NEW YORK, NEW YORK 10018

WESTCHESTER JOINT WATER WORKS
MAMARONECK, NY

RYE LAKE WATER FILTRATION PLANT
HARRISON, NY

CHEMICAL SYSTEMS - COAGULANT INSTRUMENTATION PROCESS AND INSTRUMENT DIAGRAM

DATE:	FEB 2025
HAZEN NO.:	90388-000
CONTRACT NO.:	A1364-A
DRAWING NUMBER:	I-014

File: C:\USERS\FBEATY\APPDATA\LOCAL\AUTODESK\AUTOCAD PLANT 3D\COLLABORATION\CACHE\RYE LAKE\P&ID DWG\I-014 COAGULANT SYSTEM Saved by BWALLISCH Save date: 5/20/2024 11:02 AM
PLOT DATE: 2/3/2025 1:39 PM BY: FBEATY

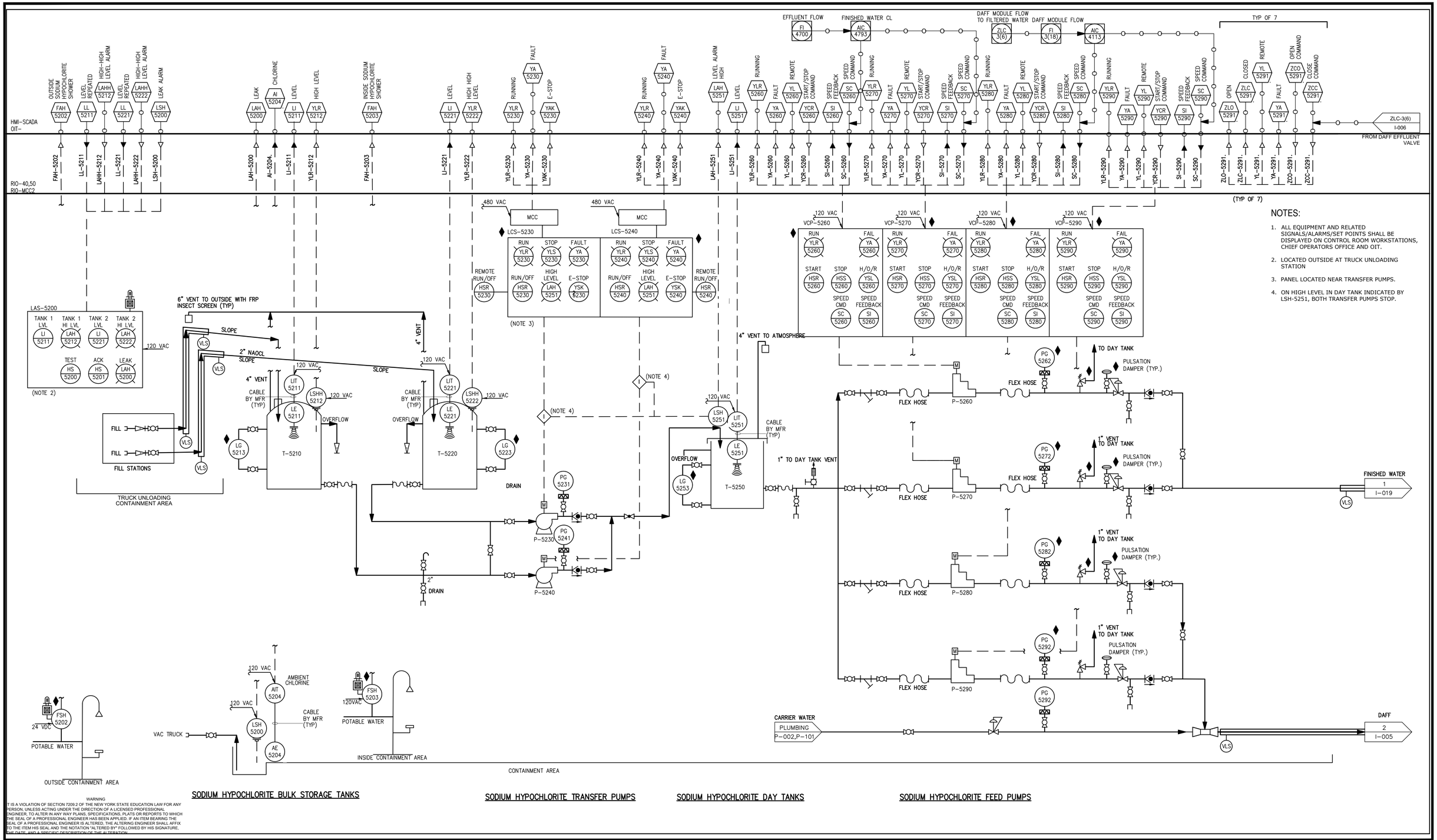

WARNING
IT IS A VIOLATION OF SECTION 7209.2 OF THE NEW YORK STATE EDUCATION LAW FOR ANY PERSON, UNLESS ACTING UNDER THE DIRECTION OF A LICENSED PROFESSIONAL ENGINEER, TO ALTER IN ANY WAY PLANS, SPECIFICATIONS, PLATS OR REPORTS TO WHICH THE SEAL OF A PROFESSIONAL ENGINEER HAS BEEN APPLIED. IF AN ITEM BEARING THE SEAL OF A PROFESSIONAL ENGINEER IS ALTERED, THE ALTERING ENGINEER SHALL AFFIX TO THE ITEM HIS SEAL AND THE NOTATION "ALTERED BY" FOLLOWED BY HIS SIGNATURE, THE DATE, AND A SPECIFIC DESCRIPTION OF THE ALTERATION.

REV	ISSUED FOR	DATE	BY

PROJECT ENGINEER: R. FROST
DESIGNED BY: F.BEATY
DRAWN BY: F.BEATY
CHECKED BY: G. MARKOU
IF THIS BAR DOES NOT MEASURE 1" THEN DRAWING IS NOT TO FULL SCALE 0 1/2" 1"

BID SET

STATE OF NEW YORK · GEORGE MARKOU · 072603 · REGISTERED PROFESSIONAL ENGINEER

Hazen

HAZEN AND SAWYER
498 SEVENTH AVENUE, 11th FLOOR
NEW YORK, NEW YORK 10018

WESTCHESTER JOINT WATER WORKS
MAMARONECK, NY

RYE LAKE WATER FILTRATION PLANT
HARRISON, NY

CHEMICAL SYSTEMS - SODIUM HYPOCHLORITE INSTRUMENTATION
PROCESS AND INSTRUMENT DIAGRAM

DATE: FEB 2025
HAZEN NO.: 90388-000
CONTRACT NO.: A1364-A
DRAWING NUMBER: I-015

File: C:\USERS\FBEATY\APPDATA\LOCAL\AUTODESK\AUTOCAD PLANT 3D\COLLABORATION\CACHE\RYE LAKE\PID DWGS\I-015 SODIUM HYPOCHLORITE SYSTEM.Saved by BWALLISCH Save date: 5/20/2024 11:17 AM
PLOT DATE: 2/3/2025 1:39 PM BY: FBEATY

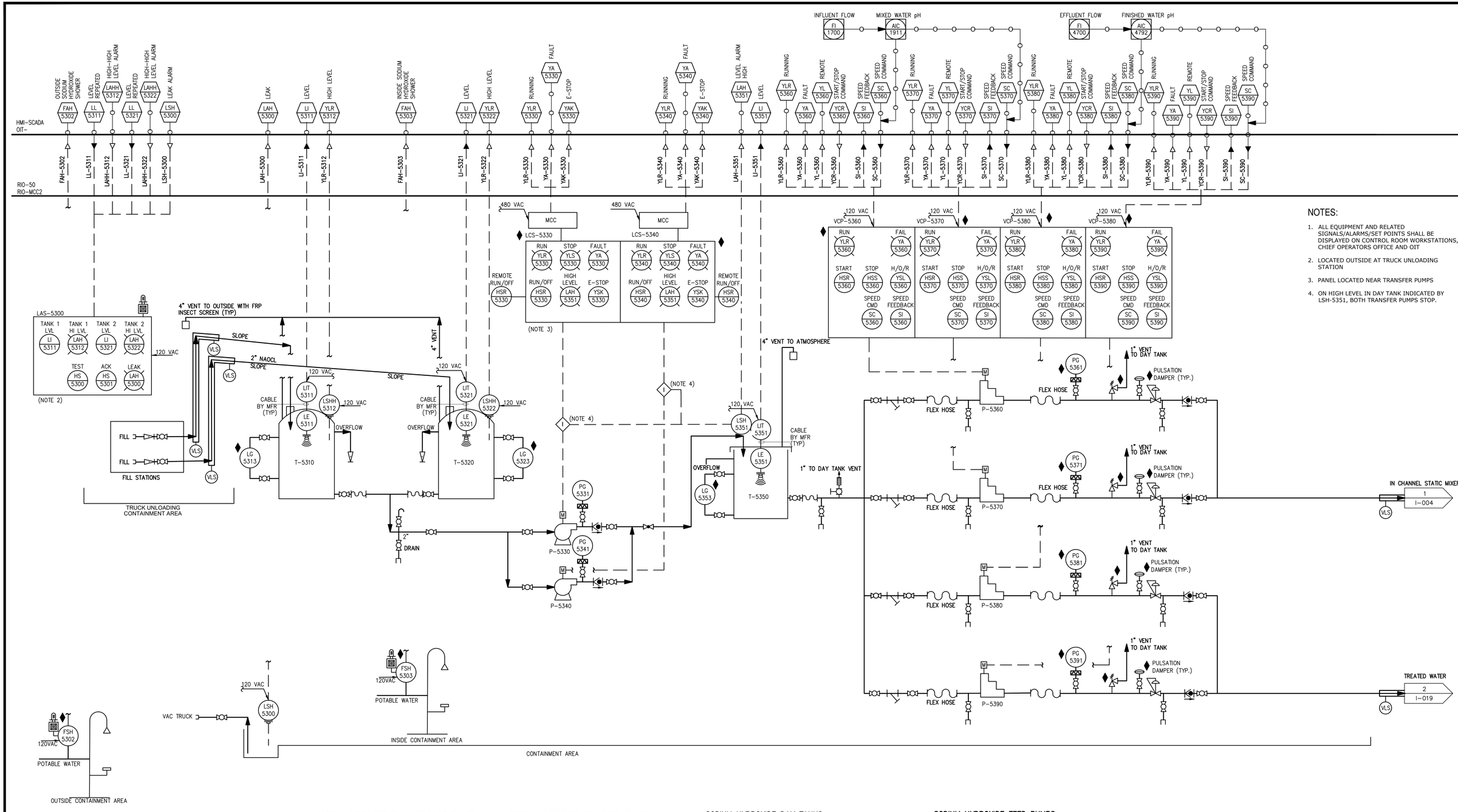

NOTES:

1. ALL EQUIPMENT AND RELATED SIGNALS/ALARMS/SET POINTS SHALL BE DISPLAYED ON CONTROL ROOM WORKSTATIONS, CHIEF OPERATORS OFFICE AND OIT
2. LOCATED OUTSIDE AT TRUCK UNLOADING STATION
3. PANEL LOCATED NEAR TRANSFER PUMPS
4. ON HIGH LEVEL IN DAY TANK INDICATED BY LSH-5351, BOTH TRANSFER PUMPS STOP.

WARNING
IT IS A VIOLATION OF SECTION 7209.2 OF THE NEW YORK STATE EDUCATION LAW FOR ANY PERSON, UNLESS ACTING UNDER THE DIRECTION OF A LICENSED PROFESSIONAL ENGINEER, TO ALTER IN ANY WAY PLANS, SPECIFICATIONS, PLATS OR REPORTS TO WHICH THE SEAL OF A PROFESSIONAL ENGINEER HAS BEEN APPLIED. IF AN ITEM BEARING THE SEAL OF A PROFESSIONAL ENGINEER IS ALTERED, THE ALTERING ENGINEER SHALL AFFIX TO THE ITEM HIS SEAL AND THE NOTATION "ALTERED BY" FOLLOWED BY HIS SIGNATURE, THE DATE, AND A SPECIFIC DESCRIPTION OF THE ALTERATION.

REV	ISSUED FOR	DATE	BY

PROJECT ENGINEER:	R. FROST
DESIGNED BY:	F.BEATY
DRAWN BY:	F.BEATY
CHECKED BY:	G. MARKOU

IF THIS BAR DOES NOT MEASURE 1" THEN DRAWING IS NOT TO FULL SCALE (0, 1/2", 1")

BID SET

Hazen
HAZEN AND SAWYER
498 SEVENTH AVENUE, 11th FLOOR
NEW YORK, NEW YORK 10018

WESTCHESTER JOINT WATER WORKS
MAMARONECK, NY

RYE LAKE WATER FILTRATION PLANT
HARRISON, NY

CHEMICAL SYSTEMS - SODIUM HYDROXIDE INSTRUMENTATION PROCESS AND INSTRUMENT DIAGRAM

DATE:	FEB 2025
HAZEN NO.:	90388-000
CONTRACT NO.:	A1364-A
DRAWING NUMBER:	I-016

File: C:\USERS\FBEATY\APPDATA\LOCAL\AUTODESK\AUTOCAD PLANT 3D\COLLABORATION\CACHE\RYE LAKE\PID DWG\I-016 SODIUM HYDROXIDE SYSTEM Saved by BWALLISCH Save date: 5/20/2024 11:08 AM
PLOT DATE: 2/3/2025 1:39 PM BY: FBEATY

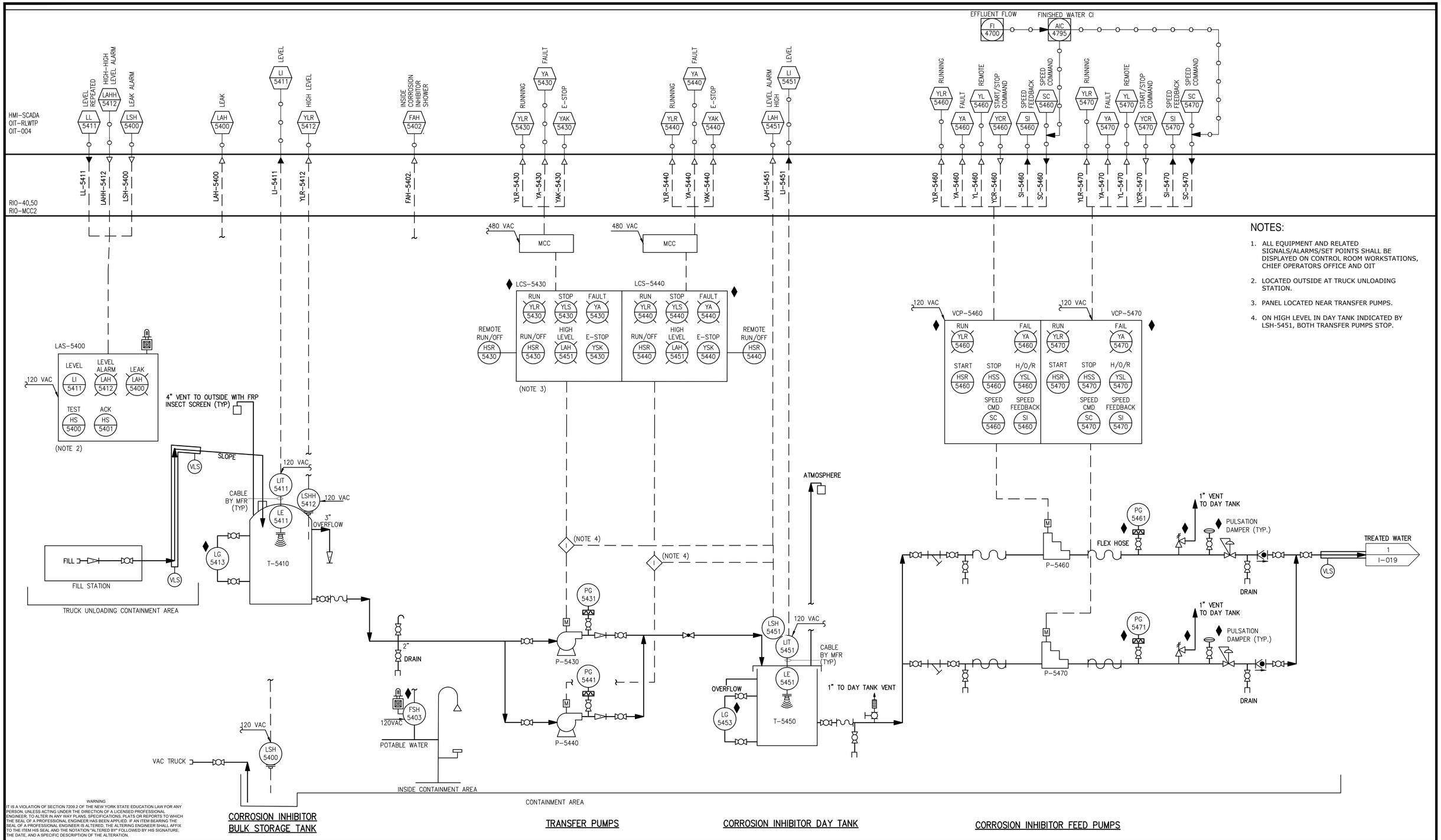

NOTES:

1. ALL EQUIPMENT AND RELATED SIGNALS/ALARMS/SET POINTS SHALL BE DISPLAYED ON CONTROL ROOM WORKSTATIONS, CHIEF OPERATORS OFFICE AND OIT
2. LOCATED OUTSIDE AT TRUCK UNLOADING STATION.
3. PANEL LOCATED NEAR TRANSFER PUMPS.
4. ON HIGH LEVEL IN DAY TANK INDICATED BY LSH-5451, BOTH TRANSFER PUMPS STOP.

WARNING
IT IS A VIOLATION OF SECTION 7209.2 OF THE NEW YORK STATE EDUCATION LAW FOR ANY PERSON, UNLESS ACTING UNDER THE DIRECTION OF A LICENSED PROFESSIONAL ENGINEER, TO ALTER IN ANY WAY PLANS, SPECIFICATIONS, PLATS OR REPORTS TO WHICH THE SEAL OF A PROFESSIONAL ENGINEER HAS BEEN APPLIED. IF AN ITEM BEARING THE SEAL OF A PROFESSIONAL ENGINEER IS ALTERED, THE ALTERING ENGINEER SHALL AFFIX TO THE ITEM HIS SEAL AND THE NOTATION "ALTERED BY" FOLLOWED BY HIS SIGNATURE, THE DATE, AND A SPECIFIC DESCRIPTION OF THE ALTERATION.

REV	ISSUED FOR	DATE	BY

PROJECT ENGINEER:	R. FROST
DESIGNED BY:	F.BEATY
DRAWN BY:	F.BEATY
CHECKED BY:	G.MARKOU

IF THIS BAR DOES NOT MEASURE 1" THEN DRAWING IS NOT TO FULL SCALE 0 1/2" 1"

BID SET

Hazen
HAZEN AND SAWYER
498 SEVENTH AVENUE, 11th FLOOR
NEW YORK, NEW YORK 10018

WESTCHESTER JOINT WATER WORKS
MAMARONECK, NY

RYE LAKE WATER FILTRATION PLANT
HARRISON, NY

CHEMICAL SYSTEMS - CORROSION INHIBITOR INSTRUMENTATION PROCESS AND INSTRUMENT DIAGRAM

DATE:	FEB 2025
HAZEN NO.:	90388-000
CONTRACT NO.:	A1364-A
DRAWING NUMBER:	I-017

File: C:\USERS\FBEATY\APPDATA\LOCAL\AUTODESK\AUTOCAD PLANT 3D\COLLABORATION\CACHE\RYE LAKE\PID DWG\I-017 CORROSION INHIBITOR SYSTEM Saved by BWALLISCH Save date: 5/20/2024 11:07 AM
PLOT DATE: 23/2025 1:39 PM BY: FBEATY

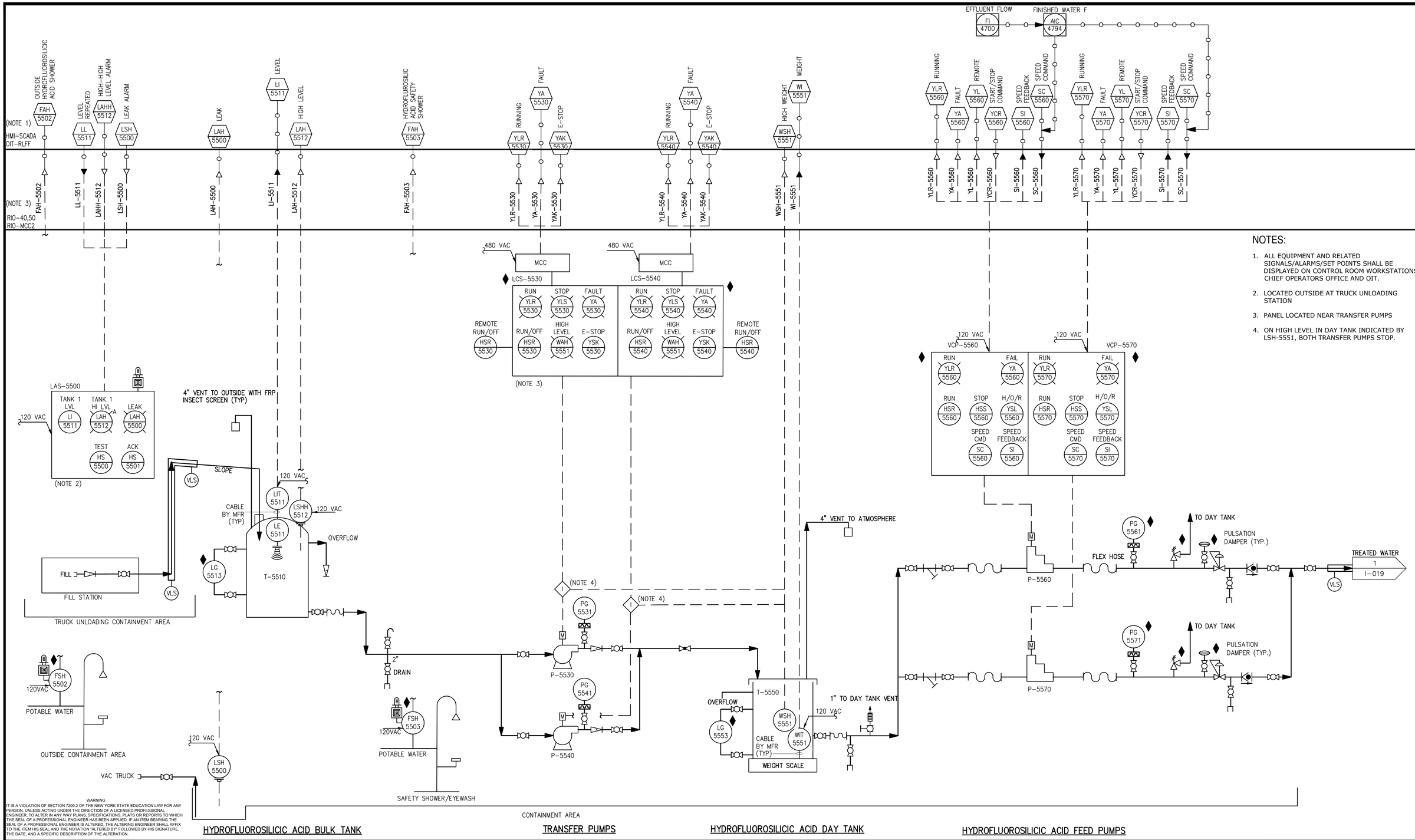

NOTES:

1. ALL EQUIPMENT AND RELATED SIGNALS/ALARMS/SET POINTS SHALL BE DISPLAYED ON CONTROL ROOM WORKSTATIONS, CHIEF OPERATORS OFFICE AND OIT.
2. LOCATED OUTSIDE AT TRUCK UNLOADING STATION
3. PANEL LOCATED NEAR TRANSFER PUMPS
4. ON HIGH LEVEL IN DAY TANK INDICATED BY LSH-5551, BOTH TRANSFER PUMPS STOP.

HYDROFLUOROSILICIC ACID BULK TANK | TRANSFER PUMPS | HYDROFLUOROSILICIC ACID DAY TANK | HYDROFLUOROSILICIC ACID FEED PUMPS

WARNING
IT IS A VIOLATION OF SECTION 7209.2 OF THE NEW YORK STATE EDUCATION LAW FOR ANY PERSON, UNLESS ACTING UNDER THE DIRECTION OF A LICENSED PROFESSIONAL ENGINEER, TO ALTER IN ANY WAY PLANS, SPECIFICATIONS, PLATS OR REPORTS TO WHICH THE SEAL OF A PROFESSIONAL ENGINEER HAS BEEN APPLIED. IF AN ITEM BEARING THE SEAL OF A PROFESSIONAL ENGINEER IS ALTERED, THE ALTERING ENGINEER SHALL AFFIX TO THE ITEM HIS SEAL AND THE NOTATION "ALTERED BY" FOLLOWED BY HIS SIGNATURE, THE DATE, AND A SPECIFIC DESCRIPTION OF THE ALTERATION

REV	ISSUED FOR	DATE	BY

PROJECT ENGINEER: R. FROST
DESIGNED BY: F.BEATY
DRAWN BY: F.BEATY
CHECKED BY: G.MARKOU
IF THIS BAR DOES NOT MEASURE 1" THEN DRAWING IS NOT TO FULL SCALE 0 1/2" 1"

BID SET

STATE OF NEW YORK · GEORGE MARKOU · 072603 · LICENSED PROFESSIONAL ENGINEER

Hazen
HAZEN AND SAWYER
498 SEVENTH AVENUE, 11th FLOOR
NEW YORK, NEW YORK 10018

WESTCHESTER JOINT WATER WORKS
MAMARONECK, NY

RYE LAKE WATER FILTRATION PLANT
HARRISON, NY

CHEMICAL SYSTEMS - HYDROFLUOROSILICIC ACID INSTRUMENTATION PROCESS AND INSTRUMENT DIAGRAM

DATE: FEB 2025
HAZEN NO.: 90388-000
CONTRACT NO.: A1364-A
DRAWING NUMBER: I-018

File: C:\USERS\FBEATY\APPDATA\LOCAL\AUTODESK\AUTOCAD PLANT 3D\COLLABORATION\CACHE\RYE LAKE\PID DWG\I-018 HYDROFLUOROSILICIC ACID SYSTEM Saved by BWALLISCH Save date: 5/20/2024 11:09 AM
PLOT DATE: 2/3/2025 1:39 PM BY: FBEATY

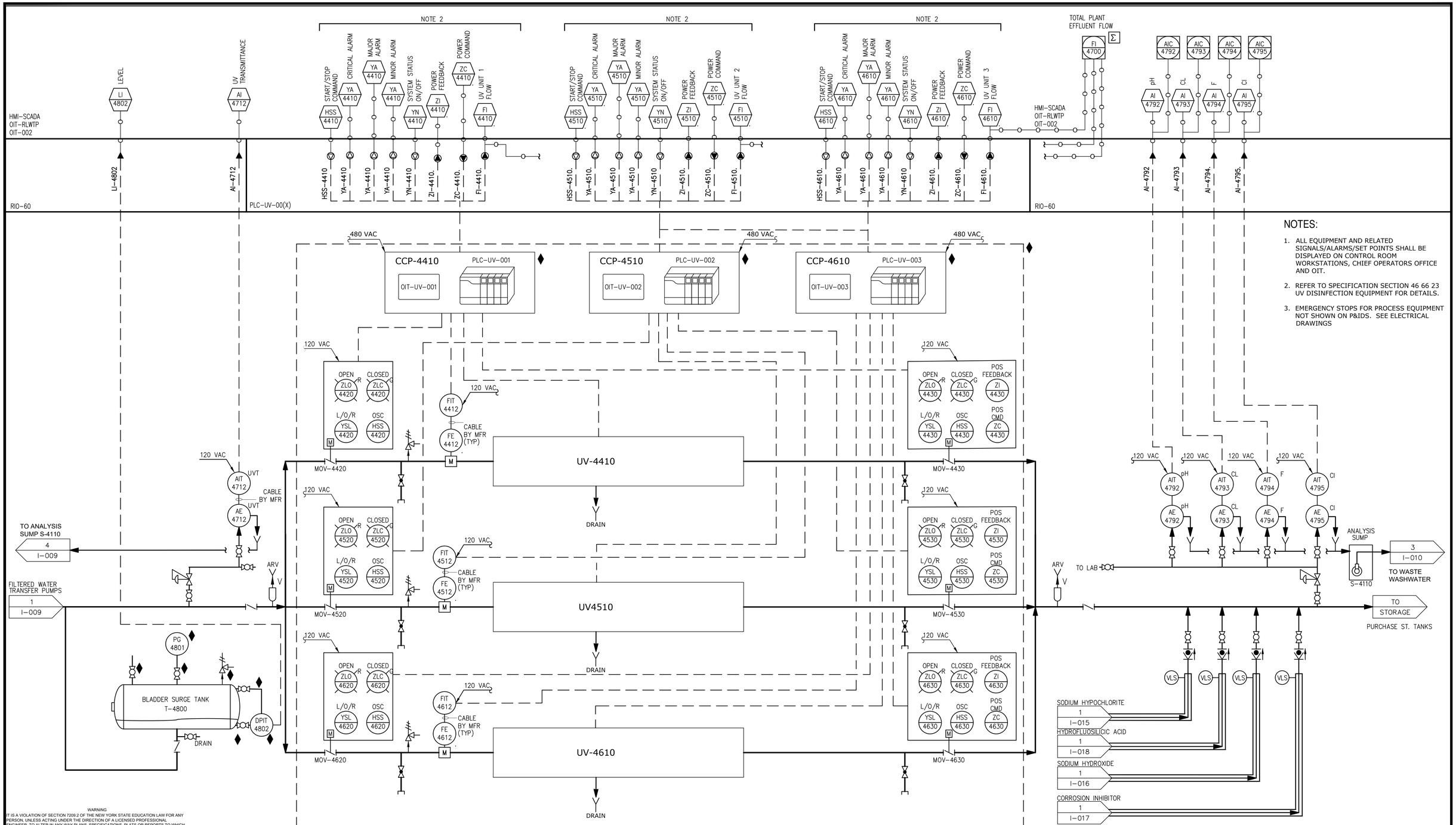

NOTES:

1. ALL EQUIPMENT AND RELATED SIGNALS/ALARMS/SET POINTS SHALL BE DISPLAYED ON CONTROL ROOM WORKSTATIONS, CHIEF OPERATORS OFFICE AND OIT.
2. REFER TO SPECIFICATION SECTION 46 66 23 UV DISINFECTION EQUIPMENT FOR DETAILS.
3. EMERGENCY STOPS FOR PROCESS EQUIPMENT NOT SHOWN ON P&IDS. SEE ELECTRICAL DRAWINGS

WARNING
IT IS A VIOLATION OF SECTION 7209.2 OF THE NEW YORK STATE EDUCATION LAW FOR ANY PERSON, UNLESS ACTING UNDER THE DIRECTION OF A LICENSED PROFESSIONAL ENGINEER, TO ALTER IN ANY WAY PLANS, SPECIFICATIONS, PLATS OR REPORTS TO WHICH THE SEAL OF A PROFESSIONAL ENGINEER HAS BEEN APPLIED. IF AN ITEM BEARING THE SEAL OF A PROFESSIONAL ENGINEER IS ALTERED, THE ALTERING ENGINEER SHALL AFFIX TO THE ITEM HIS SEAL AND THE NOTATION "ALTERED BY" FOLLOWED BY HIS SIGNATURE, THE DATE, AND A SPECIFIC DESCRIPTION OF THE ALTERATION.

REV	ISSUED FOR	DATE	BY

PROJECT ENGINEER: R. FROST
DESIGNED BY: F.BEATY
DRAWN BY: F.BEATY
CHECKED BY: G.MARKOU
IF THIS BAR DOES NOT MEASURE 1" THEN DRAWING IS NOT TO FULL SCALE 0 1/2" 1"

BID SET

STATE OF NEW YORK · GEORGE MARKOU · 072603 · LICENSED PROFESSIONAL ENGINEER

Hazen
HAZEN AND SAWYER
498 SEVENTH AVENUE, 11th FLOOR
NEW YORK, NEW YORK 10018

WESTCHESTER JOINT WATER WORKS
MAMARONECK, NY

RYE LAKE WATER FILTRATION PLANT
HARRISON, NY

UV AND FINAL CHEMICAL ADDITION INSTRUMENTATION PROCESS AND INSTRUMENT DIAGRAM

DATE: FEB 2025
HAZEN NO.: 90388-000
CONTRACT NO.: A1364-A
DRAWING NUMBER: I-019

File: C:\USERS\FBEATY\APPDATA\LOCAL\AUTODESK\AUTOCAD PLANT 3D\COLLABORATION\CACHE\RYE LAKE\PID DWG\I-019 FINAL CHEMICAL ADDITION Saved by BWALLISCH Save date: 5/20/2024
PLOT DATE: 23/2025 1:39 PM BY: FBEATY

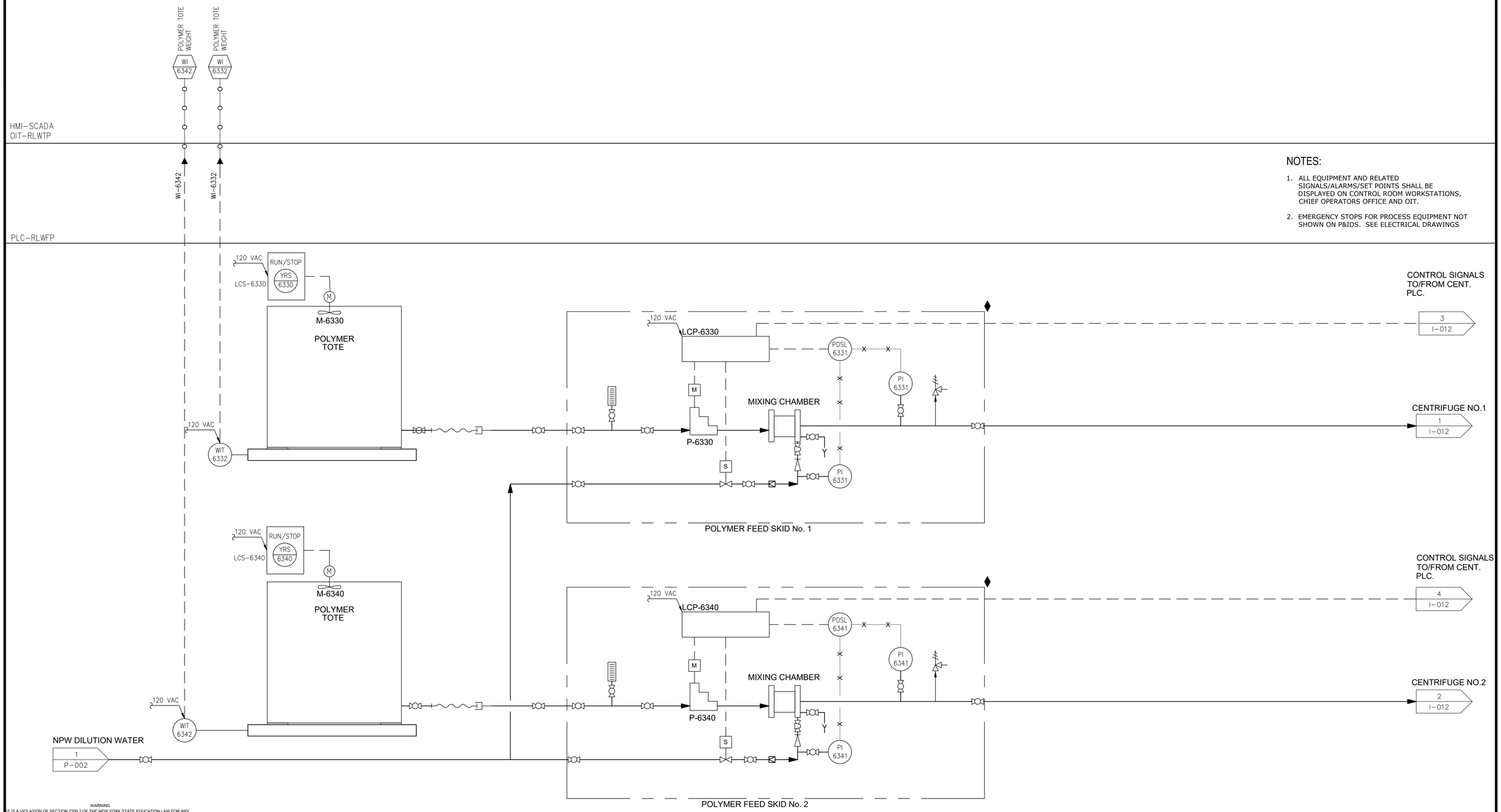

NOTES:

1. ALL EQUIPMENT AND RELATED SIGNALS/ALARMS/SET POINTS SHALL BE DISPLAYED ON CONTROL ROOM WORKSTATIONS, CHIEF OPERATORS OFFICE AND OIT.
2. EMERGENCY STOPS FOR PROCESS EQUIPMENT NOT SHOWN ON P&IDS. SEE ELECTRICAL DRAWINGS

WARNING
IT IS A VIOLATION OF SECTION 7209.2 OF THE NEW YORK STATE EDUCATION LAW FOR ANY PERSON, UNLESS ACTING UNDER THE DIRECTION OF A LICENSED PROFESSIONAL ENGINEER, TO ALTER IN ANY WAY PLANS, SPECIFICATIONS, PLATS OR REPORTS TO WHICH THE SEAL OF A PROFESSIONAL ENGINEER HAS BEEN APPLIED. IF AN ITEM BEARING THE SEAL OF A PROFESSIONAL ENGINEER IS ALTERED, THE ALTERING ENGINEER SHALL AFFIX TO THE ITEM HIS SEAL AND THE NOTATION "ALTERED BY" FOLLOWED BY HIS SIGNATURE, THE DATE, AND A SPECIFIC DESCRIPTION OF THE ALTERATION.

REV	ISSUED FOR	DATE	BY

PROJECT ENGINEER:	R. FROST
DESIGNED BY:	F.BEATY
DRAWN BY:	F.BEATY
CHECKED BY:	G.MARKOU

IF THIS BAR DOES NOT MEASURE 1" THEN DRAWING IS NOT TO FULL SCALE 0 1/2" 1"

BID SET

GEORGE MARKOU — STATE OF NEW YORK — 072603 — LICENSED PROFESSIONAL ENGINEER

Hazen
HAZEN AND SAWYER
498 SEVENTH AVENUE, 11th FLOOR
NEW YORK, NEW YORK 10018

WESTCHESTER JOINT WATER WORKS
MAMARONECK, NY

RYE LAKE WATER FILTRATION PLANT
HARRISON, NY

RESIDUAL POLYMER SYSTEMS INSTRUMENTATION PROCESS AND INSTRUMENT DIAGRAM

DATE:	FEB 2025
HAZEN NO.:	90388-000
CONTRACT NO.:	A1364-A
DRAWING NUMBER:	I-020

File: C:\USERS\FBEATY\APPDATA\LOCAL\AUTODESK\AUTOCAD PLANT 3D\COLLABORATION\CACHE\RYE LAKE\PID DWG\I-020 RESIDUALS POLYMER Saved by BWALLISCH Save date: 5/20/2024 11:17 AM
PLOT DATE: 2/3/2025 1:39 PM BY: FBEATY

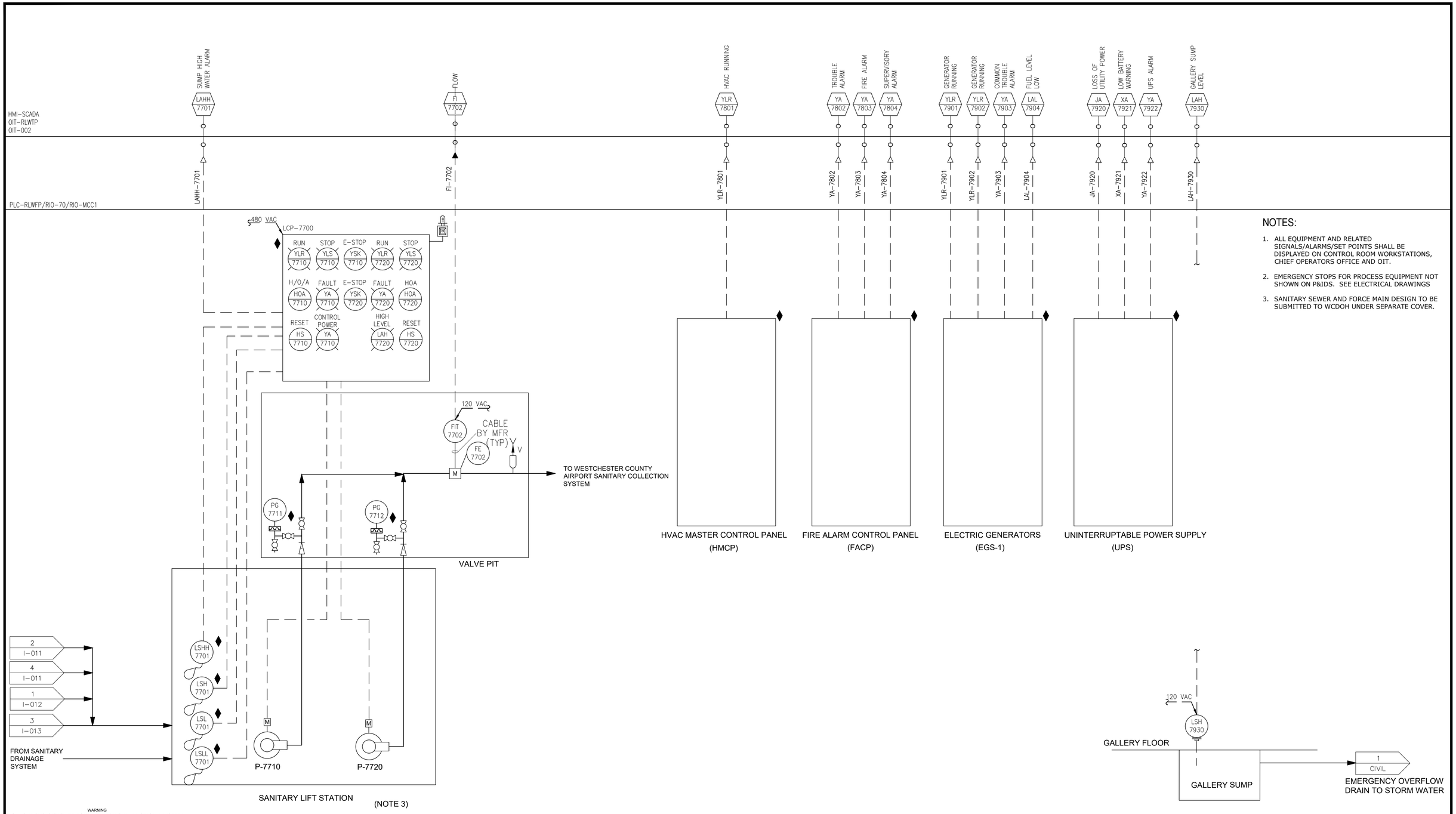

NOTES:

1. ALL EQUIPMENT AND RELATED SIGNALS/ALARMS/SET POINTS SHALL BE DISPLAYED ON CONTROL ROOM WORKSTATIONS, CHIEF OPERATORS OFFICE AND OIT.
2. EMERGENCY STOPS FOR PROCESS EQUIPMENT NOT SHOWN ON P&IDS. SEE ELECTRICAL DRAWINGS
3. SANITARY SEWER AND FORCE MAIN DESIGN TO BE SUBMITTED TO WCDOH UNDER SEPARATE COVER.

WARNING
IT IS A VIOLATION OF SECTION 7209.2 OF THE NEW YORK STATE EDUCATION LAW FOR ANY PERSON, UNLESS ACTING UNDER THE DIRECTION OF A LICENSED PROFESSIONAL ENGINEER, TO ALTER IN ANY WAY PLANS, SPECIFICATIONS, PLATS OR REPORTS TO WHICH THE SEAL OF A PROFESSIONAL ENGINEER HAS BEEN APPLIED. IF AN ITEM BEARING THE SEAL OF A PROFESSIONAL ENGINEER IS ALTERED, THE ALTERING ENGINEER SHALL AFFIX TO THE ITEM HIS SEAL AND THE NOTATION "ALTERED BY" FOLLOWED BY HIS SIGNATURE, THE DATE, AND A SPECIFIC DESCRIPTION OF THE ALTERATION.

REV	ISSUED FOR	DATE	BY

PROJECT ENGINEER: R. FROST
DESIGNED BY: F.BEATY
DRAWN BY: F.BEATY
CHECKED BY: G.MARKOU
IF THIS BAR DOES NOT MEASURE 1" THEN DRAWING IS NOT TO FULL SCALE 0 1/2" 1"

BID SET

STATE OF NEW YORK · GEORGE MARKOU · 072603 · LICENSED PROFESSIONAL ENGINEER

Hazen

HAZEN AND SAWYER
498 SEVENTH AVENUE, 11th FLOOR
NEW YORK, NEW YORK 10018

WESTCHESTER JOINT WATER WORKS
MAMARONECK, NY

RYE LAKE WATER FILTRATION PLANT
HARRISON, NY

SUPPORT SYSTEMS
INSTRUMENTATION
PROCESS AND INSTRUMENT DIAGRAM

DATE: FEB 2025
HAZEN NO.: 90388-000
CONTRACT NO.: A1364-A
DRAWING NUMBER: I-021

File: C:\USERS\FBEATY\APPDATA\LOCAL\AUTODESK\AUTOCAD PLANT 3D\COLLABORATION\CACHE\RYE LAKE\PID DWG\I-021 SUPPORT SYSTEMS Saved by FBEATY Save date: 7/31/2024 3:02 PM
PLOT DATE: 2/3/2025 1:39 PM BY: FBEATY

NOTES:
1. ALL MATERIALS OF CONSTRUCTION FOR METALLIC WETTED PARTS (ELECTRODES, GROUNDING RINGS, ETC.) SHALL BE MINIMUM 316 STAINLESS STEEL, BUT SHALL BE COMPATIBLE WITH THE PROCESS FLUID FOR EACH METER IN ACCORDANCE WITH THE RECOMMENDATIONS OF THE MANUFACTURER.
2. GASKETS NOT SHOWN. PROVIDE PER SPECIFICATIONS.

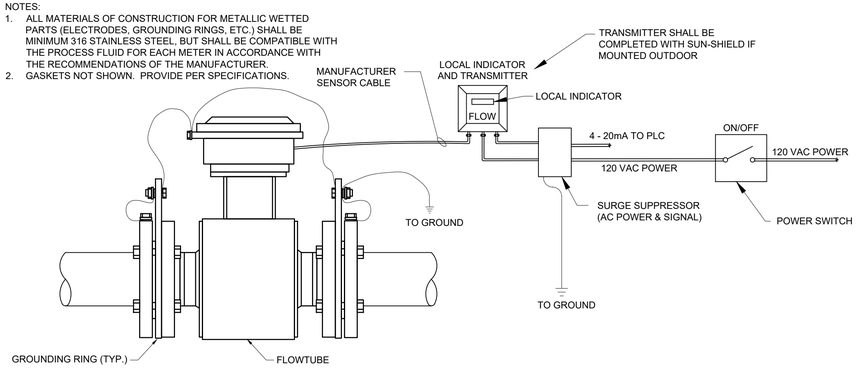

MAGNETIC FLOW METER

I-40-0106

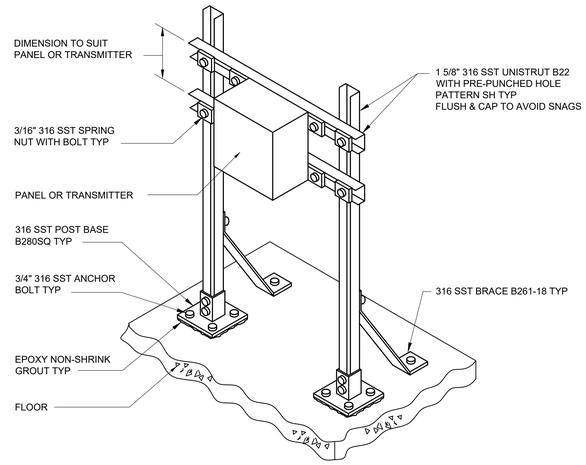

FLOOR MOUNTING SUPPORT FOR PANEL OR TRANSMITTER

I-40-0200

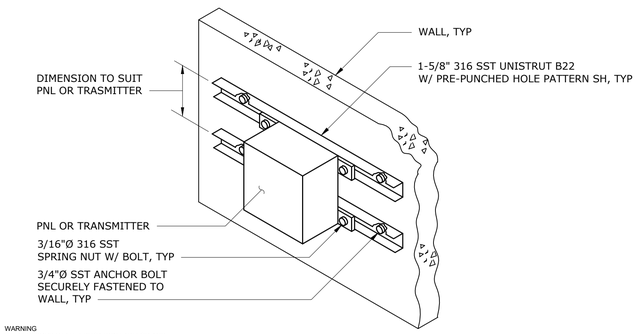

WARNING
IT IS A VIOLATION OF SECTION 7209.2 OF THE NEW YORK STATE EDUCATION LAW FOR ANY PERSON, UNLESS ACTING UNDER THE DIRECTION OF A LICENSED PROFESSIONAL ENGINEER, TO ALTER IN ANY WAY PLANS, SPECIFICATIONS, PLATS OR REPORTS TO WHICH THE SEAL OF A PROFESSIONAL ENGINEER HAS BEEN APPLIED. IF AN ITEM BEARING THE SEAL OF A PROFESSIONAL ENGINEER IS ALTERED, THE ALTERING ENGINEER SHALL AFFIX TO THE ITEM HIS SEAL AND THE NOTATION "ALTERED BY" FOLLOWED BY HIS SIGNATURE, THE DATE, AND A SPECIFIC DESCRIPTION OF THE ALTERATION.

WALL MOUNTING SUPPORT FOR PANEL OR TRANSMITTER

I-40-0201

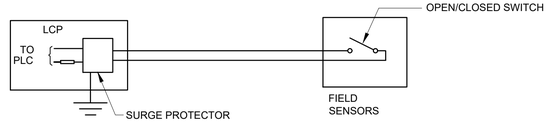

DISCRETE PLC/INPUT CIRCUIT

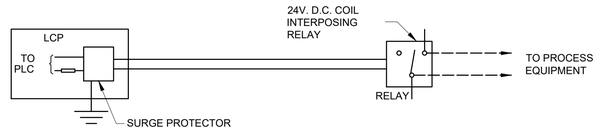

DISCRETE CIRCUIT - SURGE PROTECTORS

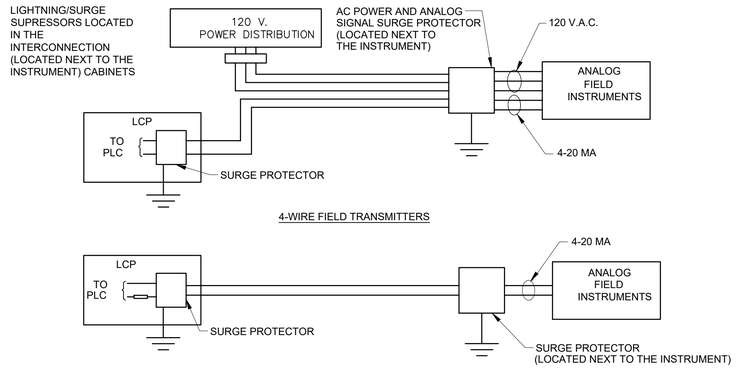

ANALOG CIRCUITS - SURGE PROTECTORS

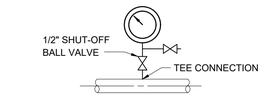

PRESSURE GAUGE OR SWITCH INSTALLATION WITH TEE CONNECTION (SHOWN W/O DIAPHRAGM SEAL) USED FOR PIPES UNDER 2"

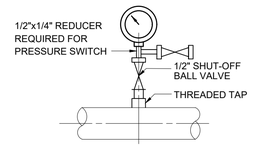

PRESSURE GAUGE OR SWITCH INSTALLATION WITH THREADED TAP (SHOWN WITHOUT DIAPHRAGM SEAL) USED FOR PIPES 2" AND LARGER

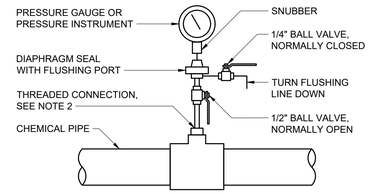

NOTES:
1. ALL COMPONENTS SHALL BE 316 SST OR HASTELLOY C, DEPENDENT ON CHEMICAL COMPATIBILITY STANDARDS, FITTINGS SHALL BE THREADED, BALL VALVES SHALL BE FULL PORT WITH LEVER STYLE HANDLE.
2. ASSEMBLY SHALL BE MOUNTED TO CHEMICAL PIPE WITH A THREADED FACTORY WELDED BOSS ON SST PIPE SYSTEMS, OR TEE WITH APPROPRIATE SIZED REINFORCED THREADED BUSHING FOR PVC OR CPVC PIPE SYSTEMS
3. FLUSHING LINE, VALVE HANDLES AND GAUGE/INSTRUMENT ARE SHOWN ROTATED FOR CLARITY. CONTRACTOR SHALL ARRANGE COMPONENTS FOR EASY ACCESS TO VALVE HANDLES, WITH GAUGE ORIENTED FOR PROPER READING FROM OPTIMUM OPERATOR STANCE. GENERALLY, FLUSHING LINE SHOULD BE ORIENTED ON THE OPPOSITE SIDE OF THE GAUGE.

DIAPHRAGM SEAL FOR CHEMICAL SERVICE

PRESSURE GAUGE / SWITCH / TRANSMITTER

I-40-0302

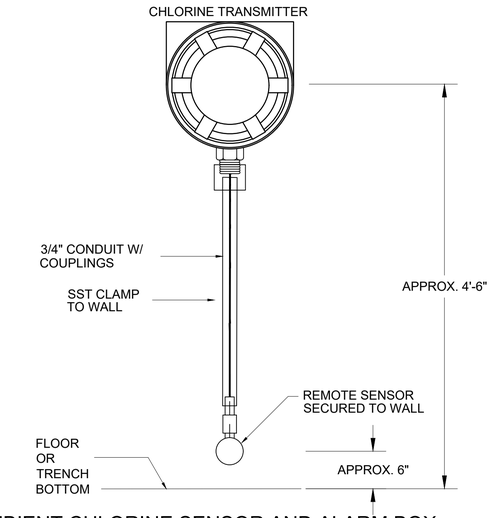

AMBIENT CHLORINE SENSOR AND ALARM BOX

I-40-0506

REV	ISSUED FOR	DATE	BY

PROJECT ENGINEER:	R. FROST
DESIGNED BY:	F. BEATY
DRAWN BY:	F. BEATY
CHECKED BY:	G. MARKOU

IF THIS BAR DOES NOT MEASURE 1" THEN DRAWING IS NOT TO FULL SCALE 0 1/2" 1"

BID SET



Hazen

HAZEN AND SAWYER
498 SEVENTH AVENUE, 11th FLOOR
NEW YORK, NEW YORK 10018

WESTCHESTER JOINT WATER WORKS
MAMARONECK, NY

RYE LAKE WATER FILTRATION PLANT
HARRISON, NY

INSTRUMENTATION
INSTALLATION DETAILS SHEET 1

DATE:	FEB 2025
HAZEN NO.:	90388-000
CONTRACT NO.:	A1364-A
DRAWING NUMBER:	I-022

File: C:\USERS\FBEATY\APPDATA\LOCAL\AUTODESK\AUTOCAD PLANT 3D\COLLABORATION\CACHE\RYE LAKE\PID DWG\I-022 INSTALLATION DETAILS - SHEET 1 Saved by FBEATY Save date: 7/31/2024 3:02 PM
PLOT DATE: 2/3/2025 1:39 PM BY: FBEATY

NOTES:
1. DIMENSION TO SUIT INSTALLATION. CONTRACTOR TO SUBMIT DRAWING FOR APPROVAL.
2. SENSOR BOTTOM TO BE MINIMUM 12" ABOVE MAXIMUM WATER LEVEL.
3. MINIMUM 2 CLAMPS. MAXIMUM OF 12" BETWEEN.

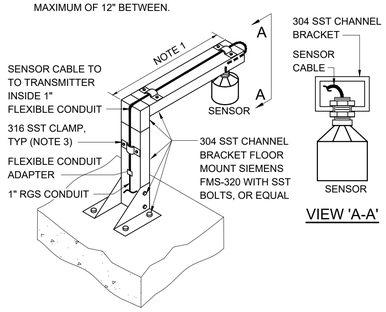

OVER-HUNG ULTRASONIC LEVEL TRANSDUCER

I-40-0217

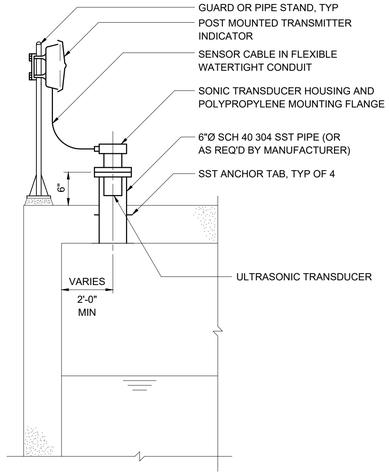

ULTRASONIC LEVEL THROUGH SLAB TRANSDUCER DETAIL

I-40-0211

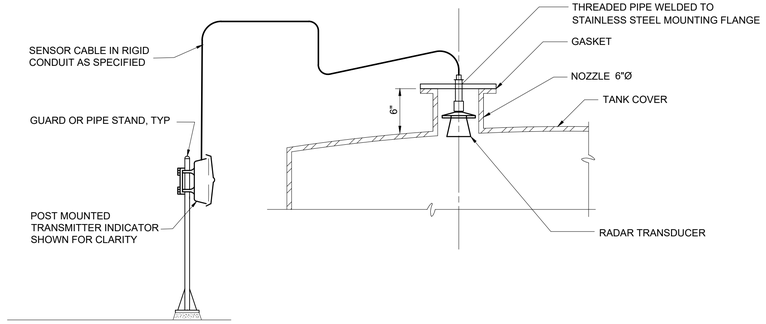

ULTRASONIC LEVEL TRANSDUCER TANK MOUNTING DETAIL

I-40-0218

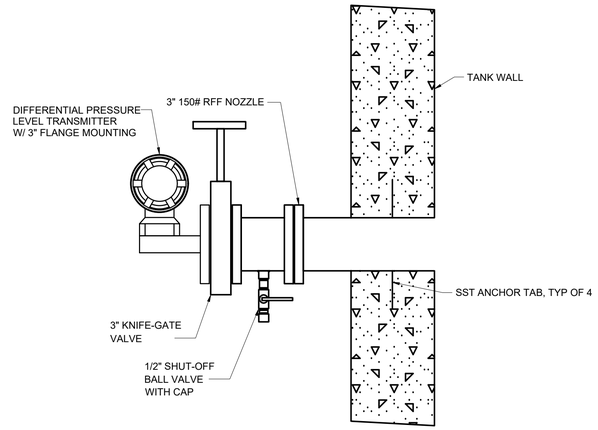

FLANGE MOUNTED DIFFERENTIAL PRESSURE LEVEL TRANSMITTER

I-40-0305

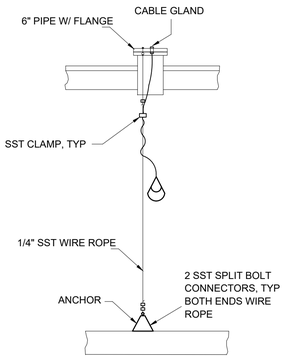

TYPICAL FLOAT TYPE LEVEL SWITCH MOUNTING DETAILS

I-40-0206

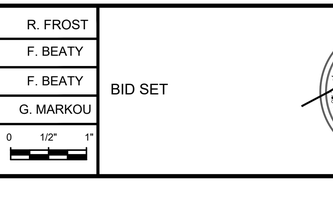

SUBMERSIBLE LEVEL (PRESSURE) TRANSMITTER OPEN CONTAINER WALL MOUNTING DETAIL

I-40-0215

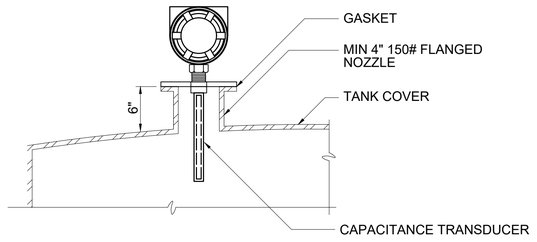

CAPACITANCE LEVEL TRANSDUCER TANK MOUNTING DETAIL

I-40-0216

CONTAINMENT AREA LEAK DETECTOR

I-40-0219

WARNING
IT IS A VIOLATION OF SECTION 7209.2 OF THE NEW YORK STATE EDUCATION LAW FOR ANY PERSON, UNLESS ACTING UNDER THE DIRECTION OF A LICENSED PROFESSIONAL ENGINEER, TO ALTER IN ANY WAY PLANS, SPECIFICATIONS, PLATS OR REPORTS TO WHICH THE SEAL OF A PROFESSIONAL ENGINEER HAS BEEN APPLIED. IF AN ITEM BEARING THE SEAL OF A PROFESSIONAL ENGINEER IS ALTERED, THE ALTERING ENGINEER SHALL AFFIX TO THE ITEM HIS SEAL AND THE NOTATION "ALTERED BY" FOLLOWED BY HIS SIGNATURE, THE DATE, AND A SPECIFIC DESCRIPTION OF THE ALTERATION.

REV	ISSUED FOR	DATE	BY

PROJECT ENGINEER:	R. FROST
DESIGNED BY:	F. BEATY
DRAWN BY:	F. BEATY
CHECKED BY:	G. MARKOU
IF THIS BAR DOES NOT MEASURE 1" THEN DRAWING IS NOT TO FULL SCALE	0 1/2" 1"

BID SET

STATE OF NEW YORK · GEORGE MARKOU · 072603 · REGISTERED PROFESSIONAL ENGINEER

Hazen
HAZEN AND SAWYER
498 SEVENTH AVENUE, 11th FLOOR
NEW YORK, NEW YORK 10018

WESTCHESTER JOINT WATER WORKS
MAMARONECK, NY

RYE LAKE WATER FILTRATION PLANT
HARRISON, NY

INSTRUMENTATION INSTALLATION DETAILS SHEET 2

DATE:	FEB 2025
HAZEN NO.:	90388-000
CONTRACT NO.:	A1364-A
DRAWING NUMBER:	I-023

File: C:\USERS\FBEATY\APPDATA\LOCAL\AUTODESK\AUTOCAD PLANT 3D\COLLABORATION\CACHE\RYE LAKE\PID DWG\I-023 INSTALLATION DETAILS - SHEET 2 Saved by FBEATY Save date: 7/31/2024 3:01 PM
PLOT DATE: 2/3/2025 1:39 PM BY: FBEATY

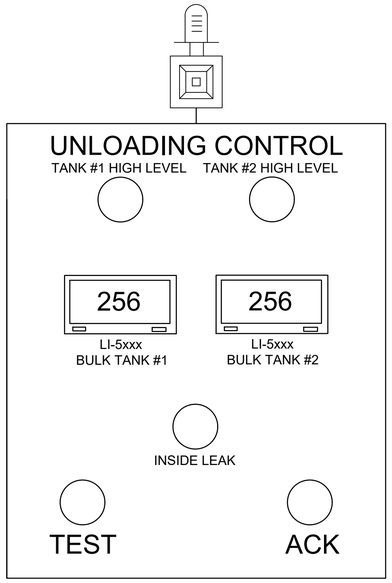

TYPICAL
TRUCK UNLOADING PANEL

I-40-0901

NOTES:

1. NUMBER OF LEVEL INDICATORS AND ALARM LIGHTS VARY ACCORDING TO THE NUMBER OF BULK TANKS AVAILABLE.
2. TYPICAL FOR TRUCK UNLOADING PANELS LAS-5100, LAS-5200, LAS-5300, LAS-5400, LAS-5500.

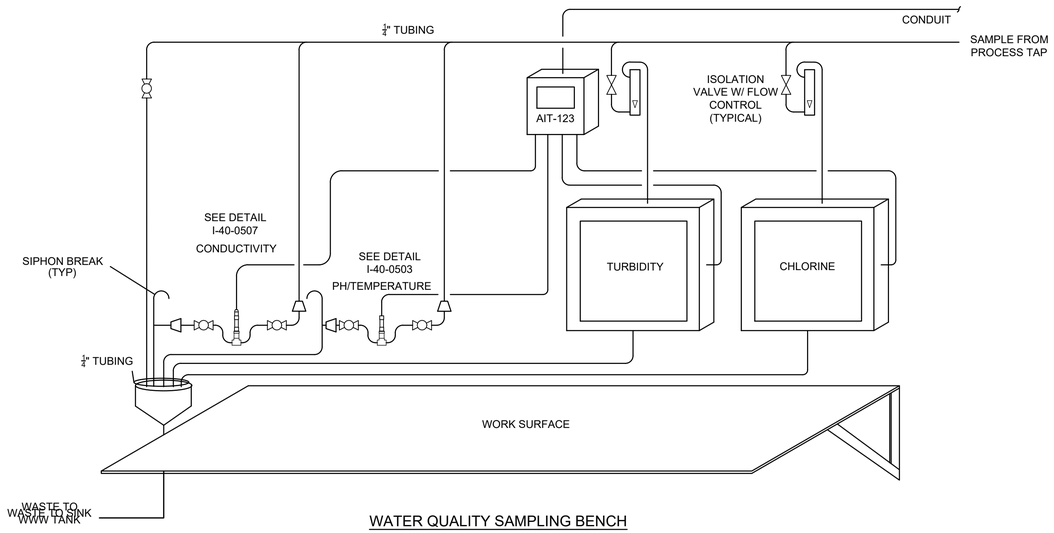

WATER QUALITY SAMPLING BENCH

I-40-0510

NOTES:

1. INSTRUMENTS AND WORK SURFACE TO BE MOUNTED TO PLEXIGLAS BACKBOARD SUPPORTED BY FRAME BOLTED TO THE FLOOR. SEE INSTALLATION DETAIL I-40-200 FOR SUPPORT FRAME.
2. SUPPORT FRAME SIZE TO BE DETERMINED BY THE NUMBER OF INSTRUMENTS TO BE MOUNTED.

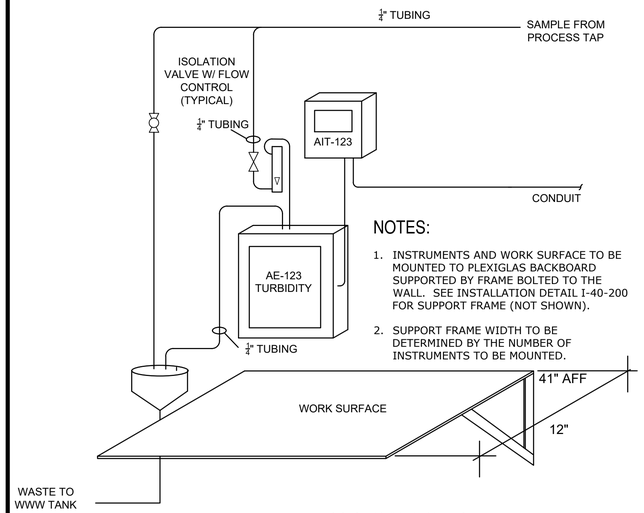

NOTES:

1. INSTRUMENTS AND WORK SURFACE TO BE MOUNTED TO PLEXIGLAS BACKBOARD SUPPORTED BY FRAME BOLTED TO THE WALL. SEE INSTALLATION DETAIL I-40-200 FOR SUPPORT FRAME (NOT SHOWN).
2. SUPPORT FRAME WIDTH TO BE DETERMINED BY THE NUMBER OF INSTRUMENTS TO BE MOUNTED.

TURBIDITY ANALYZER

I-40-0504

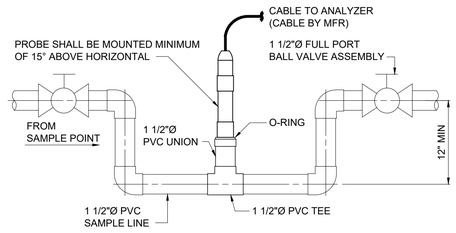

INLINE pH/ORP PROBE

I-40-0503

WARNING
IT IS A VIOLATION OF SECTION 7209.2 OF THE NEW YORK STATE EDUCATION LAW FOR ANY PERSON, UNLESS ACTING UNDER THE DIRECTION OF A LICENSED PROFESSIONAL ENGINEER, TO ALTER IN ANY WAY PLANS, SPECIFICATIONS, PLATS OR REPORTS TO WHICH THE SEAL OF A PROFESSIONAL ENGINEER HAS BEEN APPLIED. IF AN ITEM BEARING THE SEAL OF A PROFESSIONAL ENGINEER IS ALTERED, THE ALTERING ENGINEER SHALL AFFIX TO THE ITEM HIS SEAL AND THE NOTATION "ALTERED BY" FOLLOWED BY HIS SIGNATURE, THE DATE, AND A SPECIFIC DESCRIPTION OF THE ALTERATION.

REV	ISSUED FOR	DATE	BY

PROJECT ENGINEER:	R. FROST
DESIGNED BY:	F. BEATY
DRAWN BY:	F. BEATY
CHECKED BY:	G. MARKOU

IF THIS BAR DOES NOT MEASURE 1" THEN DRAWING IS NOT TO FULL SCALE (0 — 1/2" — 1")

BID SET

STATE OF NEW YORK · GEORGE MARKOU · 072603 · LICENSED PROFESSIONAL ENGINEER

Hazen
HAZEN AND SAWYER
498 SEVENTH AVENUE, 11th FLOOR
NEW YORK, NEW YORK 10018

WESTCHESTER JOINT WATER WORKS
MAMARONECK, NY

RYE LAKE WATER FILTRATION PLANT
HARRISON, NY

INSTRUMENTATION
INSTALLATION DETAILS SHEET 3

DATE:	FEB 2025
HAZEN NO.:	90388-000
CONTRACT NO.:	A1364-A
DRAWING NUMBER:	I-024

File: C:\USERS\FBEATY\APPDATA\LOCAL\AUTODESK\AUTOCAD PLANT 3D\COLLABORATION\CACHE\RYE LAKE\PID DWGS\I-024 INSTALLATION DETAILS - SHEET 3 Saved by FBEATY Save date: 7/31/2024 3:01 PM
PLOT DATE: 2/3/2025 1:39 PM BY: FBEATY

DIAGRAM SYMBOLS

- BALL VALVE - NORMALLY OPEN
- BALL VALVE - NORMALLY CLOSED
- CHECK VALVE
- PRESSURE RELIEF VALVE
- BUTTERFLY VALVE
- GATE VALVE
- BALANCING COCK
- THREE WAY VALVE
- UNION
- GLOBE VALVE
- LOUVER
- STRAINER
- PRESSURE RELIEF VALVE
- PRESSURE RELIEF VALVE
- VACUUM RELIEF VALVE
- COMBINATION VACUUM AND PRESSURE RELIEF VALVE
- PRESSURE-REDUCING REGULATOR
- BACKPRESSURE REGULATOR
- AIR RELEASE VALVE
- PANEL LAMP
  - COLOR
    - R RED
    - A AMBER
    - G GREEN
    - B BLUE
    - W WHITE
- 3-POSITION SWITCH
  - SWITCH POSITIONS
    - A AUTO
    - D DISABLE
    - E ENABLE
    - H HAND
    - L LOCAL
    - O OFF
    - R REMOTE
- 2-POSITION SWITCH
- DAMPER
  - DAMPER TYPE
    - FD FIRE DAMPER
    - BD BALANCING DAMPER
    - MD MOTORIZED DAMPER
    - VD VOLUME DAMPER (MANUAL)
- HEATING OR COOLING ELEMENT
  - ELEMENT TYPE
    - DX REFRIGERANT COOLING COIL
    - HW HOT WATER COIL
- DUCT/PIPE FLOW DIRECTION
- MAKE-UP/TRANSFER AIR FLOW DIRECTION
- SOLENOID ACTUATOR (S)
- PNEUMATIC ACTUATOR (P)
- MANUAL ACTUATOR
- MOTOR ACTUATOR (M)
- ELECTROHYDRAULIC ACTUATOR (E/H)
- PUMP
- FILTER
- UNIT HEATER
- MINIMUM EQUIPMENT CLEARANCES
- AIR DEVICE TAG (EG-A / #x# / ###)
  - DEVICE TYPE: WD - WALL DIFFUSER; CD - CEILING DIFFUSER
  - TYPE IDENTIFIER
  - FACE DIMENSIONS (INCHES X INCHES)
  - AIRFLOW (CFM)
- ELECTRIC POWER SUPPLY (ES)
- ELECTRICAL SIGNAL (ANALOG OR DISCRETE)
- SOFTWARE OR DATA LINK
- DIFFERENTIAL PRESSURE INDICATING TRANSMITTER (DPIT)
- TEMPERATURE SWITCH (TS)
- THERMOSTAT (T)
- FLOW SWITCH (FS)
- PRESSURE INDICATOR (PI)
- PUSH BUTTON
- SMOKE DETECTOR (SD)

LINETYPES

- PROPOSED ITEMS (HVAC)
- PROPOSED ITEMS (NON-HVAC)
- PROPOSED ITEMS - HIDDEN
- EXISTING ITEMS
- EXISTING - HIDDEN

WARNING
IT IS A VIOLATION OF SECTION 7209.2 OF THE NEW YORK STATE EDUCATION LAW FOR ANY PERSON, UNLESS ACTING UNDER THE DIRECTION OF A LICENSED PROFESSIONAL ENGINEER, TO ALTER IN ANY WAY PLANS, SPECIFICATIONS, PLATS OR REPORTS TO WHICH THE SEAL OF A PROFESSIONAL ENGINEER HAS BEEN APPLIED. IF AN ITEM BEARING THE SEAL OF A PROFESSIONAL ENGINEER IS ALTERED, THE ALTERING ENGINEER SHALL AFFIX TO THE ITEM HIS SEAL AND THE NOTATION "ALTERED BY" FOLLOWED BY HIS SIGNATURE, THE DATE, AND A SPECIFIC DESCRIPTION OF THE ALTERATION.

GENERAL ABBREVIATIONS

AI	ANALOG INPUT
AL	ALUMINUM
AC	AIR CONDITIONING
AFF	ABOVE FINISHED FLOOR
AO	ANALOG OUTPUT
APPROX	APPROXIMATE
ARCH	ARCHITECTURAL
ATC	AUTOMATIC TEMPERATURE CONTROL
BFP	BACKFLOW PREVENTER
BHP	BRAKE HORSEPOWER
BLDG	BUILDING
BOD	BOTTOM OF DUCT
BOT	BOTTOM
BTU	BRITISH THERMAL UNITS
BTU/HR	BRITISH THERMAL UNITS PER HOUR
CF	CUBIC FEET
CFM	CUBIC FEET OF STANDARD AIR PER MINUTE
CI	CAST IRON
CL	CENTERLINE
CLG	CEILING
CLR	CLEAR
CONN	CONNECTION
CONT	CONTINUOUS; CONTINUATION
CU	COPPER
DAF	DISSOLVED AIR FLOTATION
DB	DRY BULB
DET	DETAIL
DI	DISCRETE INPUT
DIA	DIAMETER
DIM	DIMENSION
DN	DOWN
DO	DISCRETE OUTPUT
DX	DIRECT EXPANSION REFRIGERANT
EAT	ENTERING AIR TEMPERATURE
EFF	EFFICIENCY
EL	ELEVATION
ENGR	ENGINEER
EQPT	EQUIPMENT
ES	ELECTRIC POWER SUPPLY
ESP	EXTERNAL STATIC PRESSURE
ETC	ET CETERA
EWT	ENTERING WATER TEMPERATURE
EX	EXISTING
EXP	EXPANSION
FACP	FIRE ALARM CONTROL PANEL
FLA	FULL LOAD AMPS
FLEX	FLEXIBLE
FLG	FLANGE
FPM	FEET PER MINUTE
FRP	FIBERGLASS REINFORCED PLASTIC
FT	FOOT;FEET
FT2	FEET SQUARED
FT3	FEET CUBED
GA	GAUGE
GAL	GALLON
GALV	GALVANIZED
GC	GENERAL CONTRACTOR
GPM	GALLONS PER MINUTE
GR	GRADE/GRAINS MOISTURE
HMI	HUMAN MACHINE INTERFACE
HP	HORSEPOWER; HEAT PUMP
HR	HOUR
HZ	HERTZ
HVAC	HEATING, VENTILATION AND AIR CONDITIONING
ID	INSIDE DIAMETER
IN	INCH
INT	INTERIOR
JT	JOINT
KW	KILLOWATT (1,000 WATTS)
LAT	LEAVING AIR TEMPERATURE
LB	POUND
LF	LINEAR FEET
LWT	LEAVING WATER TEMPERATURE
MAINT	MAINTENANCE
MAX	MAXIMUM
MBH	1,000 BTU PER HOUR
MCA	MINIMUM CIRCUIT AMPACITY
MCC	MOTOR CONTROL CENTER
MECH	MECHANICAL
MFR	MANUFACTURER
MIN	MINIMUM
MISC	MISCELLANEOUS
MOCP	MAXIMUM OVER-CURRENT PROTECTION
MTD	MOUNTED
NC	NORMALLY CLOSED; NOISE CRITERIA
NFPA	NATIONAL FIRE PROTECTION ASSOCIATION
NO	NORMALLY OPEN
NOM	NOMINAL
NPSH	NET POSITIVE SUCTION HEAD
NTS	NOT TO SCALE
OAI	OUTDOOR AIR INTAKE
OD	OUTSIDE DIAMETER
OPER	OPERATOR
OPNG	OPENING
PCF	POUNDS PER CUBIC FOOT
PD	PRESSURE DROP
PH	PHASE
PLC	PROGRAMMABLE LOGIC CONTROLLER
PREFAB	PREFABRICATED
PSF	POUNDS PER SQUARE FOOT
PSI(G)	POUNDS PER SQUARE INCH (GUAGE)
PVC	POLYVINYL CHLORIDE
PW	POTABLE WATER
QTY	QUANTITY
RECIRC	RECIRULCATION
RED	REDUCER
REQD	REQUIRED
RM	ROOM
RND	ROUND
RPM	REVOLUTIONS PER MINUTE
SCADA	SUPERVISORY CONTROL AND DATA ACQUISITION
SCH	SCHEDULE
SECT	SECTION
SD	SMOKE DETECTOR
SMACNA	SHEET METAL AND AIR CONDITIONING CONTRACTORS' NATIONAL ASSOCIATION
SPEC	SPECIFICATION
SST/SS	STAINLESS STEEL
STD	STANDARD
STRU	STRUCTURAL
TEMP	TEMPERATURE
THRU	THROUGH
TOD	TOP OF DUCT
TYP	TYPICAL
UL	UNDERWRITER'S LABORATORIES
UTIL	UTILITY
UV	ULTRAVIOLET
VEL	VELOCITY
VH	HEATING CONTROL VALVE
VC	COOLING CONTROL VALVE
VFD	VARIABLE FREQUENCY DRIVE
W/	WITH
W/O	WITHOUT
WB	WET BULB
WC	WATER COLUMN/WATER CLOSET
WG	WATER GAUGE
WMS	WIRE MESH SCREEN
WT	WEIGHT
YR	YEAR

EQUIPMENT ABBREVIATIONS AND DESIGNATIONS

AC	AIR CONDITIONING, AIR CONDITIONING UNIT
ACCU	AIR COOLED CONDENSING UNIT
AHU	AIR HANDLING UNIT
BLCP	BOILER LOCAL CONTROL PANEL
BMCP	BOILER MASTER CONTROL PANEL
CFT	CHEMICAL FEED TANK
DHU	DEHUMIDIFICATION UNIT
EF	EXHAUST FAN
ESD	EMERGENCY SHUT-DOWN STATION
ET	EXPANSION TANK
EUH	ELECTRIC UNIT HEATER
GMU	GLYCOL MAKE-UP UNIT
HMCP	HVAC MASTER CONTROL PANEL
HWB	HOT WATER BOILER
HWP	HOT WATER PUMP
LCP	LOCAL CONTROL PANEL
PE	POWER EXHAUSTER
PV	PROPANE VAPORIZER
UH	HOT WATER UNIT HEATER

HV-01
- HV: EQUIPMENT ABBREVIATION
- 01: ADVANCING SEQUENTIAL DIGITS

GENERAL NOTES

1. ALL DUCT DIMENSIONS ARE CLEAR DIMENSIONS TO INSIDE OF DUCT. DIMENSIONS TO DUCTS FROM FLOOR OR WALL SHALL BE TO THE OUTSIDE OF DUCT/INSULATION. WHERE INTERNAL INSULATION IS REQUIRED THE DUCT SIZE SHALL BE INCREASED TO GIVE CLEAR INSIDE DIMENSIONS AS NOTED ON THE DRAWINGS.
2. EQUIPMENT SIZES AND LOCATIONS ARE APPROXIMATE. ACTUAL DIMENSIONS TO BE DETERMINED BY EQUIPMENT FURNISHED. COORDINATE HVAC WORK WTIH THE WORK OF ALL OTHER TRADES.
3. FINAL OPENING DIMENSIONS, CONCRETE PAD SIZES, AND LOCATIONS MUST BE COORDINATED DURING CONSTRUCTION WITH APPROVED EQUIPMENT.
4. FINAL SIZES OF FLOOR OPENINGS, DUCT PLENUMS, TRANSITIONS AND PIPING CONNECTIONS TO ALL EQUIPMENT SHALL BE DETERMINED BY EQUIPMENT FURNISHED.
5. THE DRAWINGS ARE SCHEMATIC IN NATURE AND SHOW INTENDED GENERAL LOCATION OF HVAC EQUIPMENT AND SYSTEMS. NOT ALL OFFSETS AND REQUIRED FITTINGS FOR ACTUAL FIELD INSTALLATION ARE INTENDED TO BE SHOWN FOR INSTALLATION OF SYSTEMS IN THE SPACE AVAILABLE IN CONSIDERATION OF WORK OF OTHER TRADES AND FIELD CONDITIONS. THE CONTRACTOR SHALL PROVIDE ADDITIONAL OFFSETS IN DUCTWORK AND PIPING AS REQUIRED TO AVOID SUCH INTERFERENCES OR FIELD CONDITIONS AT NO ADDITIONAL COST TO THE AUTHORITY.
6. FIRST FIGURE OF DUCT SIZE INDICATES DIMENSION OF FACE SHOWN OR INDICATED OR WIDTH OF DUCT IN PLAN VIEW.
7. COORDINATE THE REQUIREMENTS FOR HVAC OPENINGS AND SLEEVES IN BUILDING ELEMENTS WITH ALL TRADES.
8. THE CONTRACTOR SHALL REFER TO SPECIFICATION SECTION 09 91 00 FOR PAINTING REQUIREMENTS UNLESS OTHERWISE NOTED.
9. THE CONTRACTOR SHALL COORDINATE DUCTWORK INSTALLATION WITH OTHER TRADES SO THAT THE DUCTWORK IS INSTALLED BEFORE THE PIPING, LIGHTING AND ELECTRICAL CONDUIT.
10. PROVIDE ADEQUATE SUPPORT, PER THE MANUFACTURER'S RECOMMENDATIONS, FOR ALL HVAC EQUIPMENT.
11. THE CONTRACTOR SHALL BE RESPONSIBLE FOR CHECKING ELECTRICAL RATINGS FROM CERTIFIED DRAWINGS OF EQUIPMENT AND SHALL MAKE ANY BRANCH CIRCUIT DISTRIBUTION MODIFICATION REQUIREMENTS WITHOUT ANY ADDITIONAL COST TO THE AUTHORITY. THE CONTRACTOR SHALL SUBMIT A SCHEDULE OF SUCH CHANGES FOR APPROVAL BY ENGINEER.
12. WHEREVER THE REQUIREMENTS AND REGULATIONS OF STATE, FEDERAL AND LOCAL AUTHORITIES HAVING JURISDICTION DIFFER FROM THE DRAWINGS OR SPECIFICATIONS, THEY SHALL TAKE PRECEDENCE AND SHALL BE MADE PART OF THE CONTRACT (EXCEPT WHERE THE DRAWINGS OR SPECIFICATIONS ARE MORE STRINGENT).
13. THERMOSTATS, SENSORS, AND/OR CONTROL PANEL LOCATIONS SHOWN ARE APPROXIMATE AND SHALL BE COORDINATED TO SUIT FIELD CONDITIONS.
14. INSTALL WALL MTD SENSORS, CONTROLS AND THERMOSTATS 4'-0" AFF UNLESS OTHERWISE NOTED. ALIGN WITH OTHER NEARBY ITEMS SUCH AS LIGHT SWITCHES. DO NOT INSTALL CLOSER THAN 6-INCHES FROM EDGE OF DOOR FRAME OR CORNER OF WALL AS SHOWN ON ARCH PLANS. WHERE CONFLICTS MAY OCCUR WITH ITEMS SUCH AS LIGHT SWITCHES, MOUNT THE SENSOR OR CONTROL DEVICE 4'-6" AFF CENTERED ABOVE THE LIGHT SWITCH.
15. PROVIDE ADEQUATE MEANS OF ACCESS CLEARANCE FOR ALL HVAC/MECHANICAL EQUIPMENT AND SYSTEMS THAT REQUIRE ACCESS FOR PROPER OPERATION, MAINTENANCE AND REPAIR PER RECOMMENDED MANUFACTURER CLEARANCES. PROVIDE ACCESS DOORS WHERE NECESSARY IN FINISHED WALLS OR DRYWALL CEILINGS FOR ACCESS TO VALVES, DAMPERS, OR CONTROL DEVICES.
16. COORDINATE THE REQUIREMENTS OF HVAC HANGERS AND SUPPORTS W/ ALL TRADES PROVIDING STRUCTURAL AND/OR ARCHITECTURAL BUILDING ELEMENTS WHICH HVAC SUPPORTS SHALL INTERFACE.
17. THE CONTRACTOR SHALL PROVIDE ALL FIRESTOPPING AND PIPE SLEEVES FOR ALL PIPE AND DUCT PENETRATIONS THRU FIRE RATED BUILDING ASSEMBLIES. REFER TO ARCHITECTURAL PLAN DRAWINGS FOR LOCATIONS OF FIRE RATED ASSEMBLIES AND FIRESTOPPING DETAILS. CONTRACTOR IS RESPONSIBLE FOR PROVIDING ACCESS TO ALL FIRE DAMPERS AND PROVIDING ADDITIONAL FIRE DAMPERS THAT ARE REQUIRED AND NOT SHOWN ON DRAWINGS FOR UP TO FOUR ADDITIONAL FIRE DAMPERS.
18. DUCTWORK ACCESS DOORS ARE NOT NECESSARILY SHOWN ON THE CONTRACT DRAWINGS. ACCESS DOORS SHALL BE INSTALLED IN ACCORDANCE WITH THE CONTRACT SPECIFICATIONS AND AS RECOMMENDED BY THE EQUIPMENT MANUFACTURER.
19. THE HOT WATER SYSTEM DESIGN IS BASED ON A 25% PROPYLENE GLYCOL SOLUTION FOR BURST PROTECTION DOWN TO AN OUTDOOR AMBIENT TEMPERATURE OF 2°F.
20. REFER TO SPECIFICATION SECTION 23 09 00 FOR EQUIPMENT CONTROL STRATEGIES AND TEMPERATURE SET-POINTS.
21. THE CONTRACTOR SHALL COORDINATE WITH THE OTHER TRADES SO AIR CONDITIONING EQUIPMENT, RELATED DUCTWORK, PIPING, AND APPURTENANCES ARE NOT LOCATED DIRECTLY ABOVE ELECTRICAL EQUIPMENT.
22. APPLICABLE CODES: 2020 NEW YORK STATE MECHANICAL CODE; 2020 NEW YORK STATE BUILDING CODE; 2020 NEW YORK STATE ENERGY CONSERVATION CONSTRUCTION CODE; CODE OF THE VILLAGE OF HARRISON.

DUCTWORK SYSTEMS ABBREVIATIONS AND DESIGNATIONS

ROUND: 4" EA
- EA: DUCT SYSTEM
- 4": DUCT DIAMETER

RECTANGULAR: 4" X 4" EA
- EA: DUCT SYSTEM
- 4" X 4": DUCT DIMENSIONS

EA	EXHAUST AIR
OA	OUTSIDE AIR
RA	RETURN AIR
SA	SUPPLY AIR

PIPING SYSTEMS ABBREVIATIONS AND DESIGNATIONS

4" HW(S)
- HW: PIPING SYSTEM
- 4": PIPE DIAMETER
- (S): SUFFIX (IF APPLICABLE)
  - R RETURN
  - S SUPPLY

HW	HOT WATER
P	PROPANE GAS

REV	ISSUED FOR	DATE	BY

PROJECT ENGINEER:	R. FROST
DESIGNED BY:	M. GIORDANO
DRAWN BY:	R. CHIN
CHECKED BY:	R. VAN DYKE

IF THIS BAR DOES NOT MEASURE 1" THEN DRAWING IS NOT TO FULL SCALE (0, 1/2", 1")

BID SET

STATE OF NEW YORK · MARC A. GIORDANO · 099858 · LICENSED PROFESSIONAL ENGINEER

Hazen

HAZEN AND SAWYER
498 SEVENTH AVENUE, 11th FLOOR
NEW YORK, NEW YORK 10018

WESTCHESTER JOINT WATER WORKS
MAMARONECK, NY

RYE LAKE WATER FILTRATION PLANT
HARRISON, NY

FILTRATION PLANT
HVAC
GENERAL NOTES, SYMBOLS AND ABBREVIATIONS

DATE:	FEB 2025
HAZEN NO.:	90388-000
CONTRACT NO.:	A1364-A
DRAWING NUMBER:	H-001

Autodesk Docs://90388-000_Rye_Lake_Filtration/90388-000-WFP-H.rvt
2/19/2025 2:42:16 PM

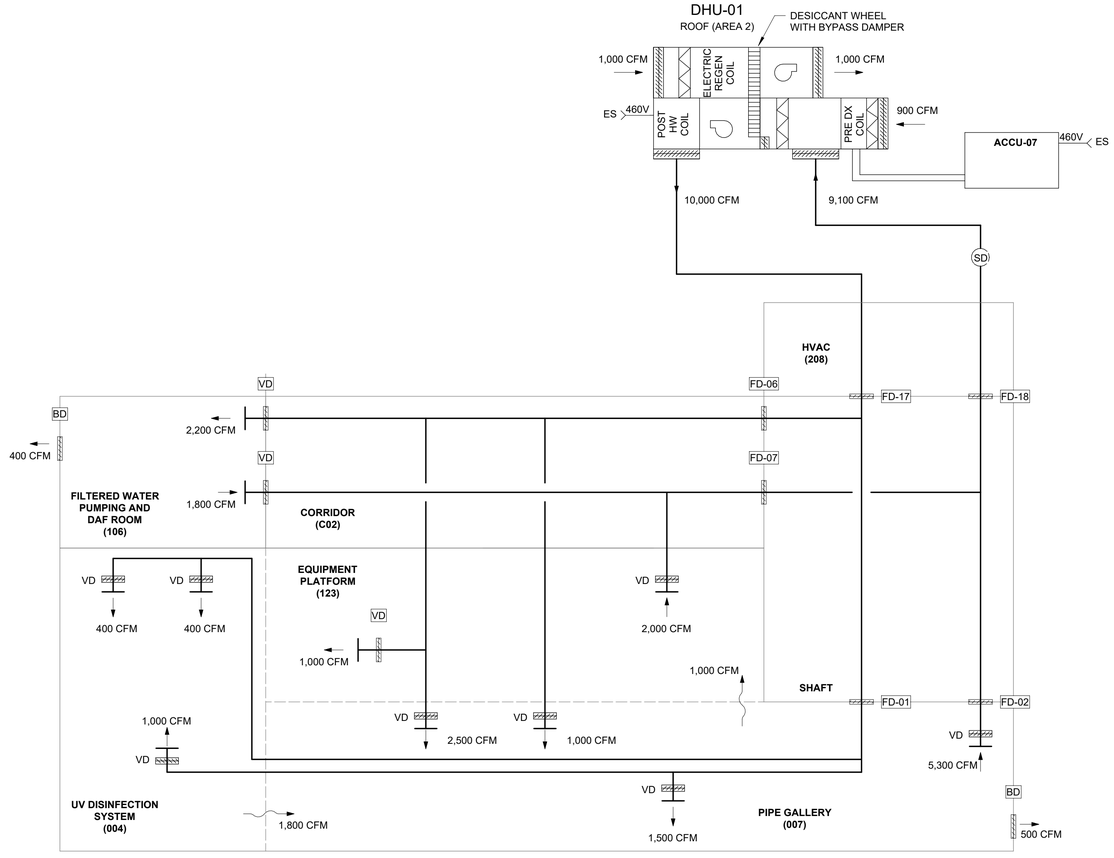

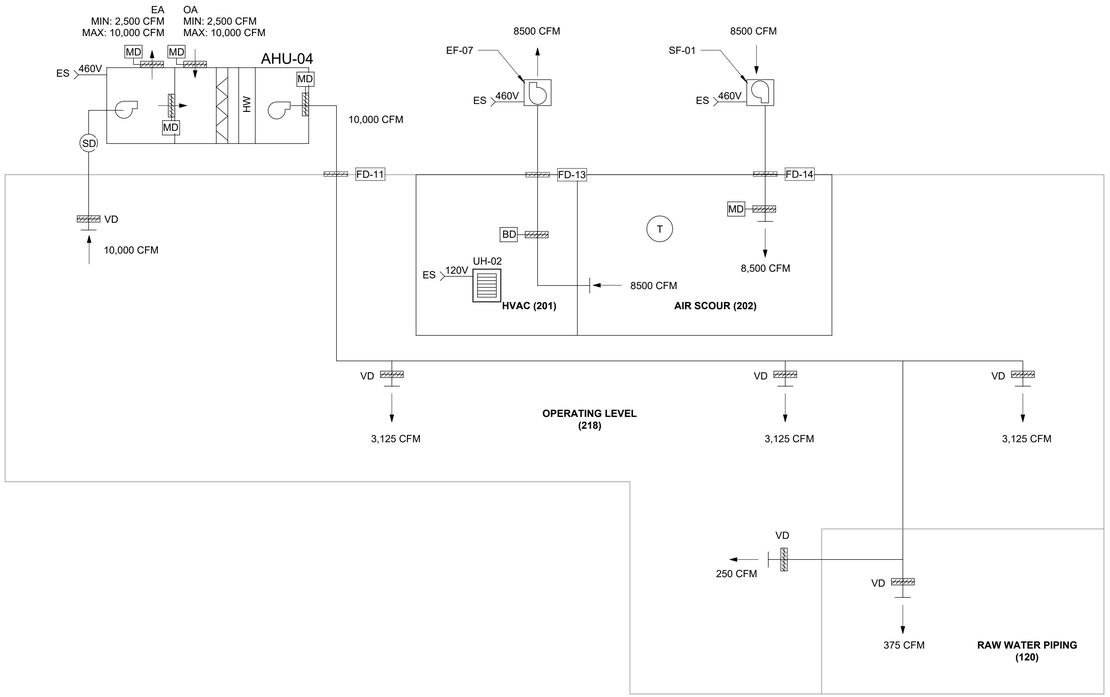

WARNING
IT IS A VIOLATION OF SECTION 7209.2 OF THE NEW YORK STATE EDUCATION LAW FOR ANY PERSON, UNLESS ACTING UNDER THE DIRECTION OF A LICENSED PROFESSIONAL ENGINEER, TO ALTER IN ANY WAY PLANS, SPECIFICATIONS, PLATS OR REPORTS TO WHICH THE SEAL OF A PROFESSIONAL ENGINEER HAS BEEN APPLIED. IF AN ITEM BEARING THE SEAL OF A PROFESSIONAL ENGINEER IS ALTERED, THE ALTERING ENGINEER SHALL AFFIX TO THE ITEM HIS SEAL AND THE NOTATION "ALTERED BY" FOLLOWED BY HIS SIGNATURE, THE DATE, AND A SPECIFIC DESCRIPTION OF THE ALTERATION.

REV	ISSUED FOR	DATE	BY

PROJECT ENGINEER:	R. FROST
DESIGNED BY:	M. GIORDANO
DRAWN BY:	R. CHIN
CHECKED BY:	R. VAN DYKE
IF THIS BAR DOES NOT MEASURE 1" THEN DRAWING IS NOT TO FULL SCALE	0 1/2" 1"

BID SET

Hazen
HAZEN AND SAWYER
498 SEVENTH AVENUE, 11th FLOOR
NEW YORK, NEW YORK 10018

WESTCHESTER JOINT WATER WORKS
MAMARONECK, NY

RYE LAKE WATER FILTRATION PLANT
HARRISON, NY

FILTRATION PLANT
HVAC
CONTROL DIAGRAMS - SHEET 1

DATE:	FEB 2025
HAZEN NO.:	90388-000
CONTRACT NO.:	A1364-A
DRAWING NUMBER:	H-002

Autodesk Docs://90388-000_Rye_Lake_Filtration/90388-000-WFP-H.rvt
2/18/2025 2:42:17 PM

CHEMICAL AREA VENTILATION						
CHEMICAL AREA	AREA (FT2)	VOLUME (FT3)	MINIMUM EXHAUST AIRFLOW REQUIRED (CFM/FT2)	PROPOSED EXHAUST AIRFLOW		
				CFM/FT2	CFM	ACH
HYDROFLUOSILICIC ACID (101)	440	10,550	1.0	2.0	900	5.1
SODIUM HYPOCHLORITE (102)	730	17,500	1.0	1.8	1,300	4.5
COAGULANT (103)	865	20,750	1.0	1.7	1,500	4.3
CORROSION INHIBITOR (104)	440	10,550	1.0	1.8	800	4.5
POLYMER/SOFTENER (FUTURE) (105)	760	18,250	1.0	1.6	1,250	4.1
SODIUM HYDROXIDE (107)	1320	31,700	1.0	1.7	2,300	4.4

NOTES:

1. MINIMUM EXHAUST AIRFLOW RATES AS REQUIRED BY THE 2020 NEW YORK STATE FIRE CODE SECTION 5004.3.1.

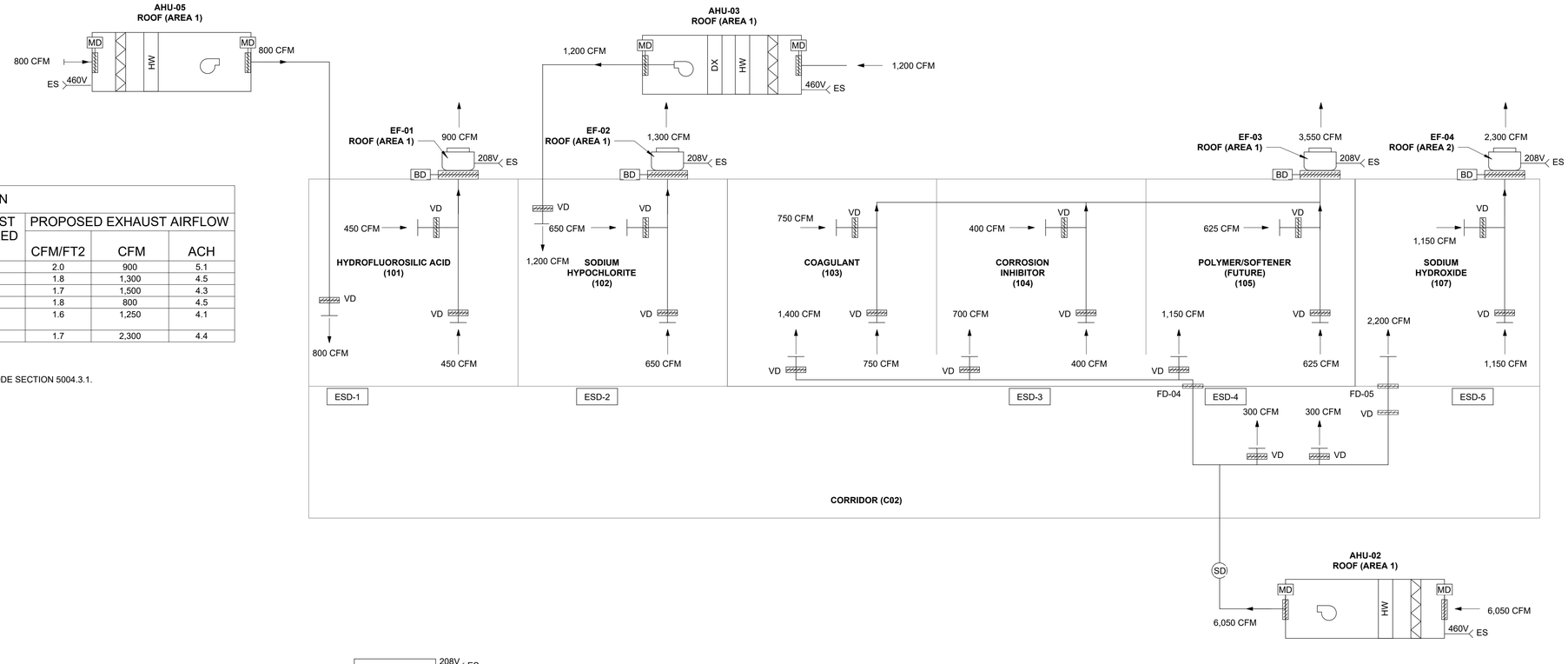

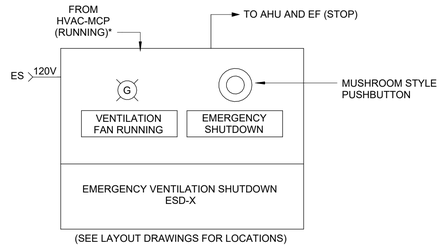

*-A SIGNAL FROM HVAC-MCP SHALL BE SENT TO ESD-1 TO INDICATE AHU-05 AND EF-01 ARE RUNNING.
*-A SIGNAL FROM HVAC-MCP SHALL BE SENT TO ESD-2 TO INDICATE AHU-03 AND EF-02 ARE RUNNING.
*-A SIGNAL FROM HVAC-MCP SHALL BE SENT TO ESD-3, ESD-4, AND ESD-5 TO INDICATE AHU-02, EF-03, AND EF-04 ARE RUNNING.

EMERGENCY VENTILATION
SHUTDOWN PANEL

(ESD-1, ESD-2, ESD-3, ESD-4, AND ESD-5)

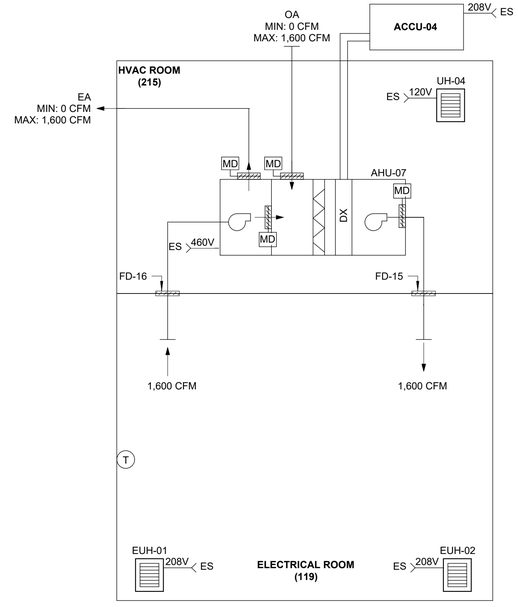

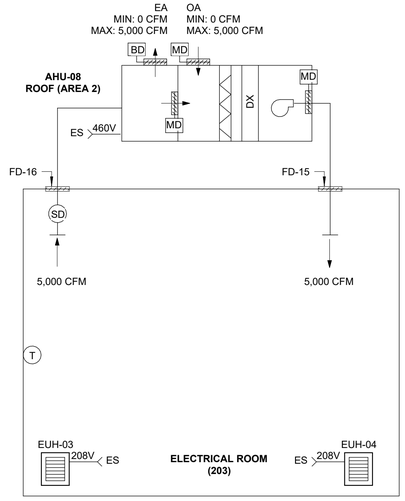

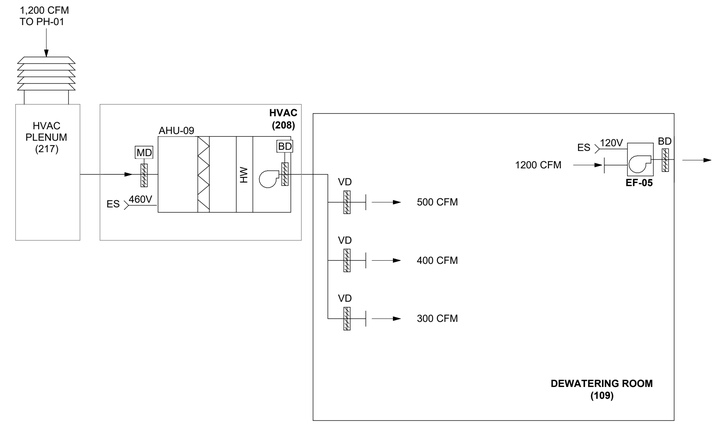

WARNING
IT IS A VIOLATION OF SECTION 7209.2 OF THE NEW YORK STATE EDUCATION LAW FOR ANY PERSON, UNLESS ACTING UNDER THE DIRECTION OF A LICENSED PROFESSIONAL ENGINEER, TO ALTER IN ANY WAY PLANS, SPECIFICATIONS, PLATS OR REPORTS TO WHICH THE SEAL OF A PROFESSIONAL ENGINEER HAS BEEN APPLIED. IF AN ITEM BEARING THE SEAL OF A PROFESSIONAL ENGINEER IS ALTERED, THE ALTERING ENGINEER SHALL AFFIX TO THE ITEM HIS SEAL AND THE NOTATION "ALTERED BY" FOLLOWED BY HIS SIGNATURE, THE DATE, AND A SPECIFIC DESCRIPTION OF THE ALTERATION.

REV	ISSUED FOR	DATE	BY

PROJECT ENGINEER:	R. FROST
DESIGNED BY:	M. GIORDANO
DRAWN BY:	R. CHIN
CHECKED BY:	R. VAN DYKE
IF THIS BAR DOES NOT MEASURE 1" THEN DRAWING IS NOT TO FULL SCALE	0 1/2" 1"

BID SET



Hazen
HAZEN AND SAWYER
498 SEVENTH AVENUE, 11th FLOOR
NEW YORK, NEW YORK 10018

WESTCHESTER JOINT WATER WORKS
MAMARONECK, NY

RYE LAKE WATER FILTRATION PLANT
HARRISON, NY

FILTRATION PLANT
HVAC
CONTROL DIAGRAMS - SHEET 2

DATE:	FEB 2025
HAZEN NO.:	90388-000
CONTRACT NO.:	A1364-A
DRAWING NUMBER:	H-003

Autodesk Docs://90388-000_Rye_Lake_Filtration/90388-000-WFP-H.rvt
2/18/2025 2:42:18 PM

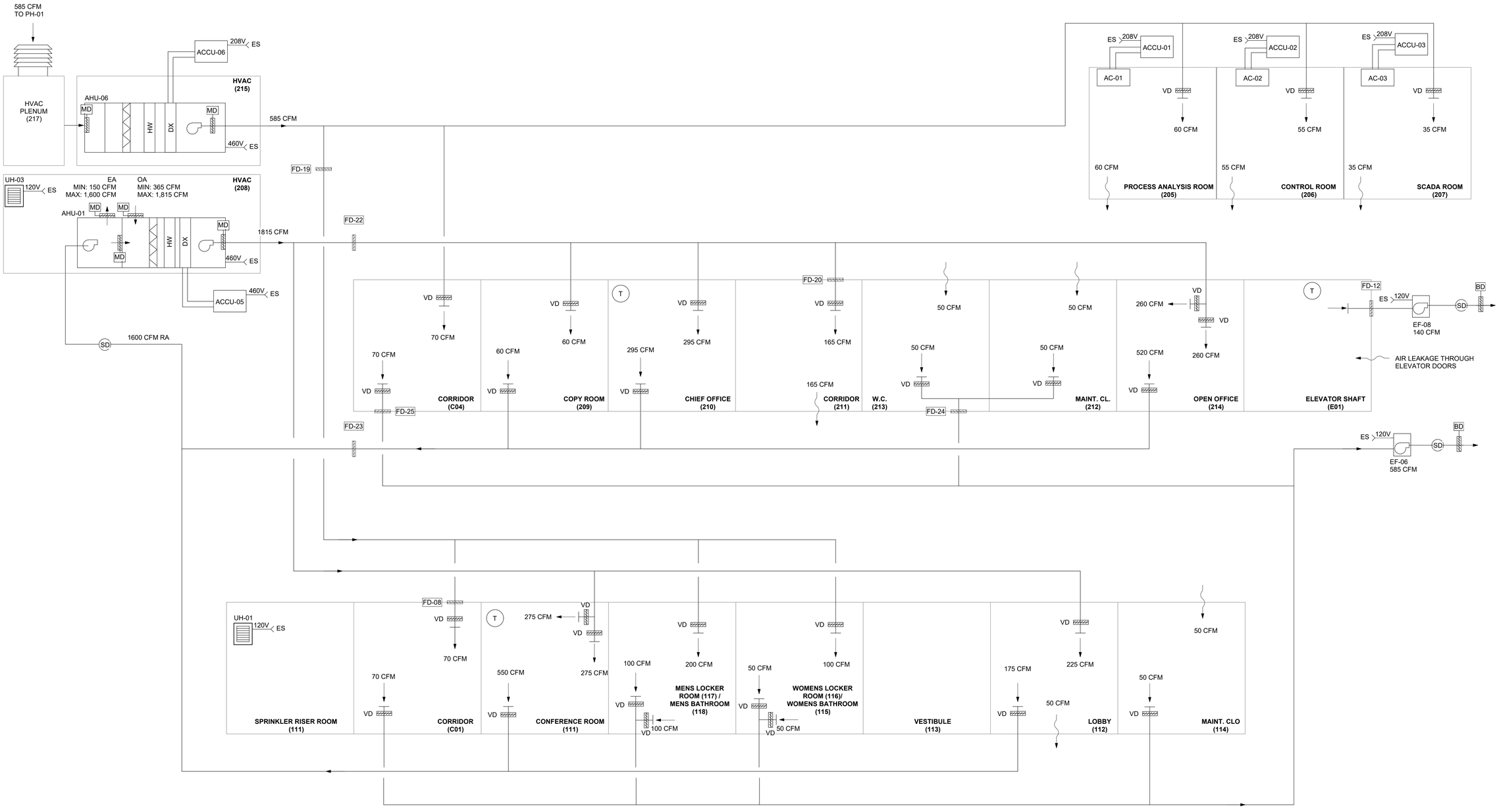

WARNING
IT IS A VIOLATION OF SECTION 7209.2 OF THE NEW YORK STATE EDUCATION LAW FOR ANY PERSON, UNLESS ACTING UNDER THE DIRECTION OF A LICENSED PROFESSIONAL ENGINEER, TO ALTER IN ANY WAY PLANS, SPECIFICATIONS, PLATS OR REPORTS TO WHICH THE SEAL OF A PROFESSIONAL ENGINEER HAS BEEN APPLIED. IF AN ITEM BEARING THE SEAL OF A PROFESSIONAL ENGINEER IS ALTERED, THE ALTERING ENGINEER SHALL AFFIX TO THE ITEM HIS SEAL AND THE NOTATION "ALTERED BY" FOLLOWED BY HIS SIGNATURE, THE DATE, AND A SPECIFIC DESCRIPTION OF THE ALTERATION.

REV	ISSUED FOR	DATE	BY

PROJECT ENGINEER:	R. FROST
DESIGNED BY:	M. GIORDANO
DRAWN BY:	R. CHIN
CHECKED BY:	R. VAN DYKE

IF THIS BAR DOES NOT MEASURE 1" THEN DRAWING IS NOT TO FULL SCALE 0 1/2" 1"

BID SET

Hazen
HAZEN AND SAWYER
498 SEVENTH AVENUE, 11th FLOOR
NEW YORK, NEW YORK 10018

WESTCHESTER JOINT WATER WORKS
MAMARONECK, NY

RYE LAKE WATER FILTRATION PLANT
HARRISON, NY

FILTRATION PLANT
HVAC
CONTROL DIAGRAMS - SHEET 3

DATE:	FEB 2025
HAZEN NO.:	90388-000
CONTRACT NO.:	A1364-A
DRAWING NUMBER:	H-004

Autodesk Docs://90388-000_Rye_Lake_Filtration/90388-000-WFP-H.rvt
2/18/2025 2:42:18 PM

NOTES:
1. CONTRACTOR SHALL COORDINATE FLOW SWITCH SETPOINT. SETPOINT SHALL BE THE HIGHER OF THE FOLLOWING: FURNISHED BOILER MINIMUM FLOW AT LOW FIRE, 5GPM LESS THAN THE MINIMUM FLOW AT THE MINIMUM SPEED FOR FURNISHED PUMP
2. CONTRACTOR SHALL COORDINATE WITH CONTROL VALVE MANUFACTURER FOR FINAL CONTROL VALVE SIZE BASED ON MINIMUM FLOW AT MINIMUM SPEED FOR FURNISHED PUMP.

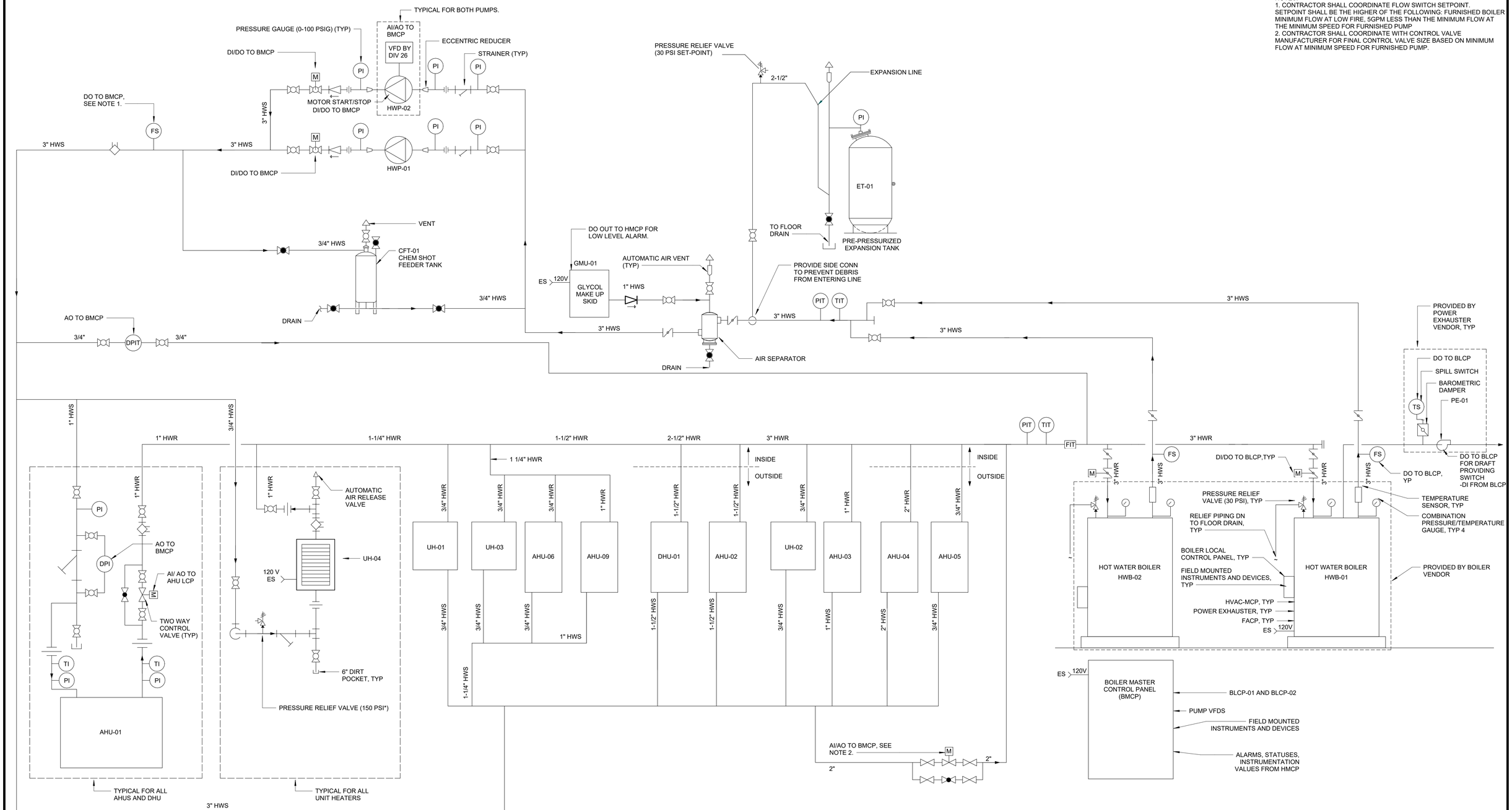

HOT WATER CONTROL FLOW DIAGRAM

WARNING
IT IS A VIOLATION OF SECTION 7209.2 OF THE NEW YORK STATE EDUCATION LAW FOR ANY PERSON, UNLESS ACTING UNDER THE DIRECTION OF A LICENSED PROFESSIONAL ENGINEER, TO ALTER IN ANY WAY PLANS, SPECIFICATIONS, PLATS OR REPORTS TO WHICH THE SEAL OF A PROFESSIONAL ENGINEER HAS BEEN APPLIED. IF AN ITEM BEARING THE SEAL OF A PROFESSIONAL ENGINEER IS ALTERED, THE ALTERING ENGINEER SHALL AFFIX TO THE ITEM HIS SEAL AND THE NOTATION "ALTERED BY" FOLLOWED BY HIS SIGNATURE, THE DATE, AND A SPECIFIC DESCRIPTION OF THE ALTERATION.

REV	ISSUED FOR	DATE	BY

PROJECT ENGINEER:	R. FROST
DESIGNED BY:	M. GIORDANO
DRAWN BY:	R. CHIN
CHECKED BY:	R. VAN DYKE

IF THIS BAR DOES NOT MEASURE 1" THEN DRAWING IS NOT TO FULL SCALE — 0 1/2" 1"

BID SET



Hazen
HAZEN AND SAWYER
498 SEVENTH AVENUE, 11th FLOOR
NEW YORK, NEW YORK 10018

WESTCHESTER JOINT WATER WORKS
MAMARONECK, NY

RYE LAKE WATER FILTRATION PLANT
HARRISON, NY

FILTRATION PLANT
HVAC
CONTROL DIAGRAMS - SHEET 4

DATE:	FEB 2025
HAZEN NO.:	90388-000
CONTRACT NO.:	A1364-A
DRAWING NUMBER:	H-005

Autodesk Docs://90388-000_Rye_Lake_Filtration/90388-000-WFP-H.rvt
2/19/2025 2:42:19 PM

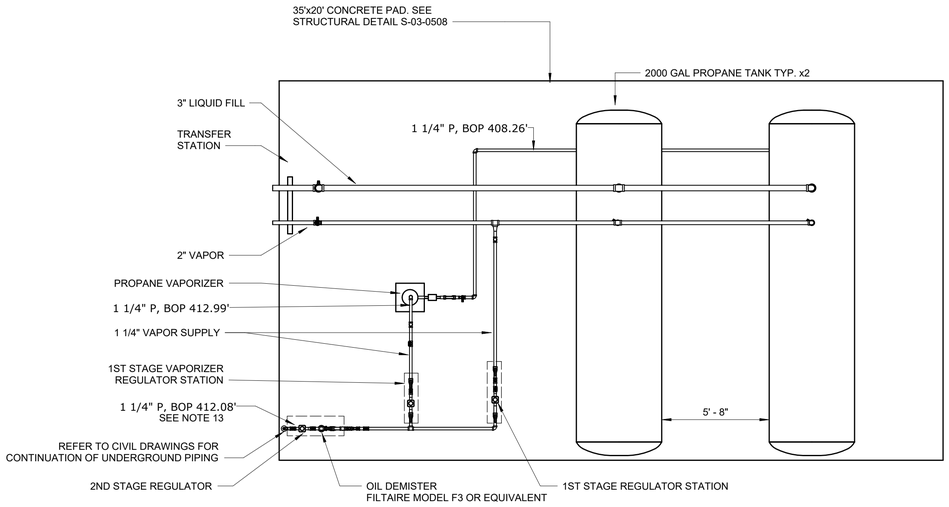

PROPANE SYSTEM LAYOUT

1/4" = 1'-0"

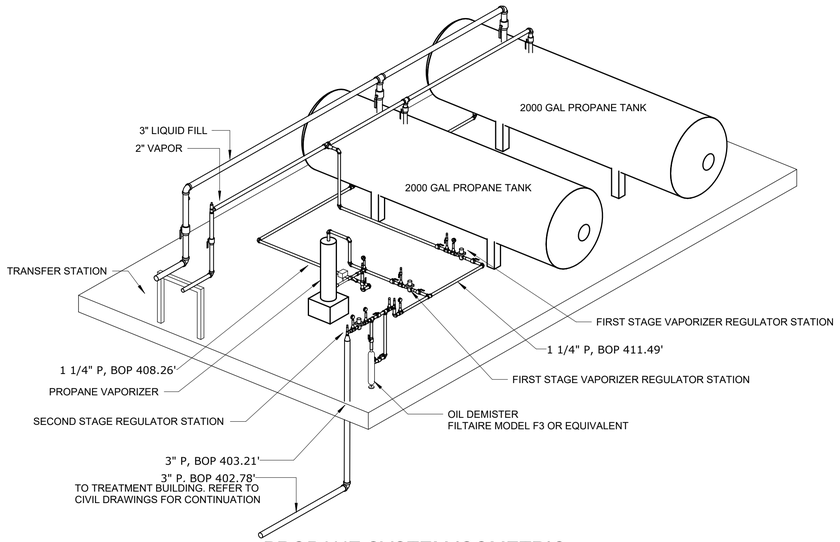

PROPANE SYSTEM ISOMETRIC

NOTES:

1. CONTRACTOR SHALL REFER TO AND COORDINATE NEW WORK WITH OTHER TRADES.
2. CONTRACTOR SHALL COORDINATE PROPANE GAS PIPE ROUTING INDICATED ON DRAWINGS WITH STRUCTURE, LIGHTS, DUCTS, CONDUIT, EQUIPMENT, ETC. PRIOR TO INSTALLATION AND MAKE REQUIRED ADJUSTMENTS FOR A COMPLETE AND WORKING SYSTEM.
3. ALL STEEL HANGERS, SUPPORTS, INSULATION SHIELDS, CLAMPS, STEEL ANGLES, THREADED RODS, CONCRETE INSERTS, NUTS, ROD COUPLINGS, CHANNELS ETC SHALL BE ELECTRO-GALVANIZED OR HOT DIP GALVANIZED.
4. ALL NEW PROPANE SYSTEM COMPONENTS INCLUDING, BUT NOT LIMITED TO, THE PROPANE STORAGE TANK, REGULATORS, VALVES, GAUGES, AND EXCLUDING THE HOT WATER BOILERS, SHALL BE PROVIDED BY THE CONTRACTOR, THROUGH ONE VENDOR. THE CONTRACTOR, THROUGH THE VENDOR, SHALL HAVE SOLE RESPONSIBILITY OF MATCHING ALL COMPONENTS AND PROVIDING EQUIPMENT WHICH FUNCTIONS TOGETHER AS A SYSTEM.
5. PROPANE PIPING BASED ON BOILER MODELS IN THE SCHEDULE. CONTRACTORS SHALL COORDINATE RATINGS OF EQUIPMENT INSTALLED. IF ALTERNATE EQUIPMENT IS INSTALLED, COORDINATE REGULATOR AND PIPE SIZE TO MEET FLOW AND PRESSURE REQUIRED.
6. PROVIDE DIELECTRIC INSULATION KITS FOR ALL PIPING CONNECTIONS INVOLVING DISSIMILAR MATERIALS, TRANSITIONS BETWEEN ABOVE GRADE AND BELOW GRADE, OR CONNECTIONS BETWEEN INTERIOR AND EXTERIOR PIPES.
7. REFER TO SPECIFICATION 23 10 01 FOR ADDITIONAL REQUIREMENTS FOR PROPANE PIPING, EQUIPMENT AND ACCESSORIES.
8. SEE DRAWINGS FOR PROPANE LOCATION AND PLAN VIEW AND DETAILS.
9. TANK RELIEF VALVE "START-TO-LEAK" PRESSURE SET-POINT SHALL BE 250 PSIG.
10. FIRST STAGE REGULATOR SHALL BE INSTALLED AT HIGH POINT IN VAPOR PIPING SYSTEM.
11. THE CONTRACTOR SHALL PROVIDE AN INTERNAL EXCESS FLOW VALVE (REGO A3213D) FITTED FOR REMOTE CABLE CLOSURE AND AUTOMATIC SHUTOFF EQUIPPED WITH THERMAL ACTIVATION (REGO 3200C - REMOTE CABLE KIT AND REGO 3200L - OPERATING LEVER). THE REMOTE OPERATING LEVER SHALL BE LOCATED IN ACCORDANCE WITH SECTION 5.9.4.1.(D).(4) OF NFPA 58-2020.

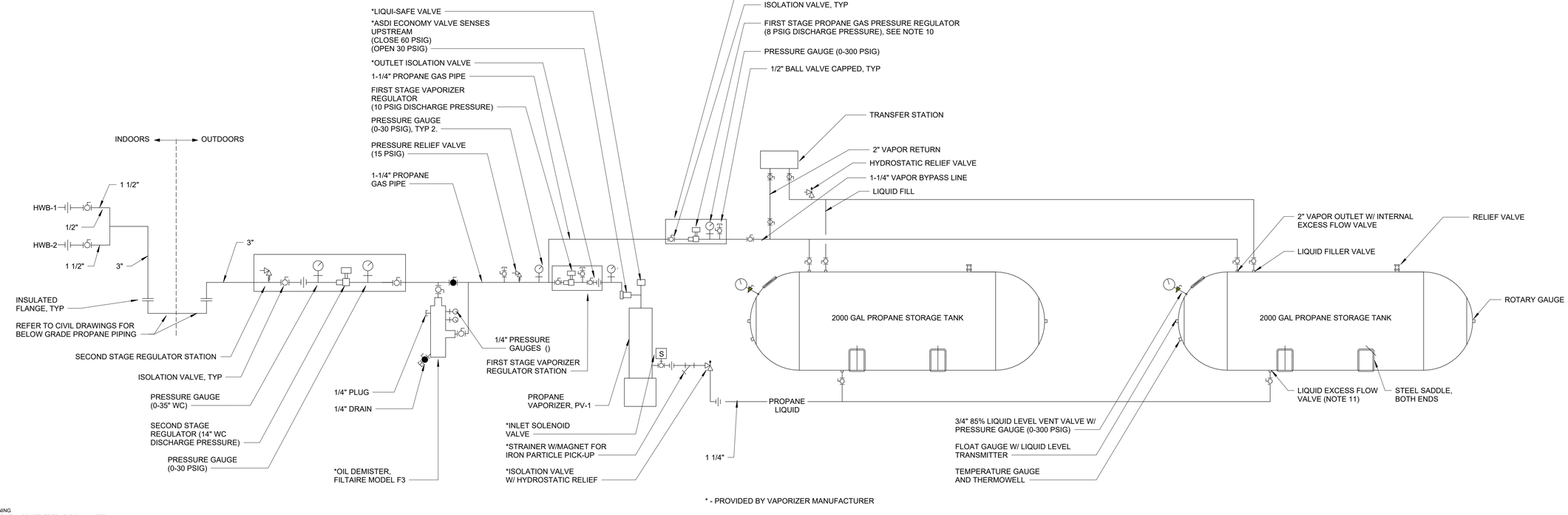

* - PROVIDED BY VAPORIZER MANUFACTURER

PROPANE SYSTEM FLOW DIAGRAM

WARNING
IT IS A VIOLATION OF SECTION 7209.2 OF THE NEW YORK STATE EDUCATION LAW FOR ANY PERSON, UNLESS ACTING UNDER THE DIRECTION OF A LICENSED PROFESSIONAL ENGINEER, TO ALTER IN ANY WAY PLANS, SPECIFICATIONS, PLATS OR REPORTS TO WHICH THE SEAL OF A PROFESSIONAL ENGINEER HAS BEEN APPLIED. IF AN ITEM BEARING THE SEAL OF A PROFESSIONAL ENGINEER IS ALTERED, THE ALTERING ENGINEER SHALL AFFIX TO THE ITEM HIS SEAL AND THE NOTATION "ALTERED BY" FOLLOWED BY HIS SIGNATURE, THE DATE, AND A SPECIFIC DESCRIPTION OF THE ALTERATION.

REV	ISSUED FOR	DATE	BY

PROJECT ENGINEER:	R. FROST
DESIGNED BY:	M. GIORDANO
DRAWN BY:	R. CHIN
CHECKED BY:	R. VAN DYKE

IF THIS BAR DOES NOT MEASURE 1" THEN DRAWING IS NOT TO FULL SCALE 0 1/2" 1"

BID SET



Hazen
HAZEN AND SAWYER
498 SEVENTH AVENUE, 11th FLOOR
NEW YORK, NEW YORK 10018

WESTCHESTER JOINT WATER WORKS
MAMARONECK, NY

RYE LAKE WATER FILTRATION PLANT
HARRISON, NY

FILTRATION PLANT
HVAC
CONTROL DIAGRAMS - SHEET 5

DATE:	FEB 2025
HAZEN NO.:	90388-000
CONTRACT NO.:	A1364-A
DRAWING NUMBER:	H-006

Autodesk Docs://90388-000_Rye_Lake_Filtration/90388-000-WFP-H.rvt
2/18/2025 2:42:22 PM

NOTES:

1. PLACE A RED WARNING SIGN CONSPICUOUSLY ON THE FACE OF EACH HVAC CONTROL PANEL WHICH READS AS FOLLOWS:

   WARNING

   THIS PANEL CONNECTED TO MULTIPLE SOURCES OF POWER

2. FOR SEQUENCE OF OPERATION SEE SPECIFICATION 23 09 02.
3. SIGNALS SHOWN IN CONTROL DIAGRAMS, UNLESS OTHERWISE STATED, TERMINATE AT OR ORIGINATE FROM THE HVAC MASTER CONTROL PANEL.
4. POWER SIGNALS FOR DAMPERS AND INSTRUMENTS ARE NOT SHOWN ON THE CONTROL DIAGRAM. POWER AND CONTROL TO ACTUATORS SHALL BE FROM THE CONTROL PANEL THE DEVICE IS CONNECTED TO.
5. THE FOLLOWING SIGNALS SHALL BE HARDWIRED:
   - 5.1. FAN MCC START/STOP - DI
   - 5.2. FAN MCC READY - DO
   - 5.3. FAN MCC RUNNING - DO
   - 5.4. FAN MCC FAULT - DO
6. BACNET DATALINK COMMUNICATION. SEE SPECIFICATION 23 09 02 FOR DETAILS.
7. THE FOLLOWING SIGNALS SHALL BE HARDWIRED:
   - 7.1. DAMPERS OPEN END SWITCH - DI
8. THE FOLLOWING SIGNALS SHALL BE HARDWIRED:
   - 8.1. VENT SYSTEM SHUTDOWN - DI
   - 8.2. VENT SYSTEM PURGE - DI
9. THE FOLLOWING SIGNALS SHALL BE HARDWIRED:
   - 9.1. GENERAL ALARM - DO

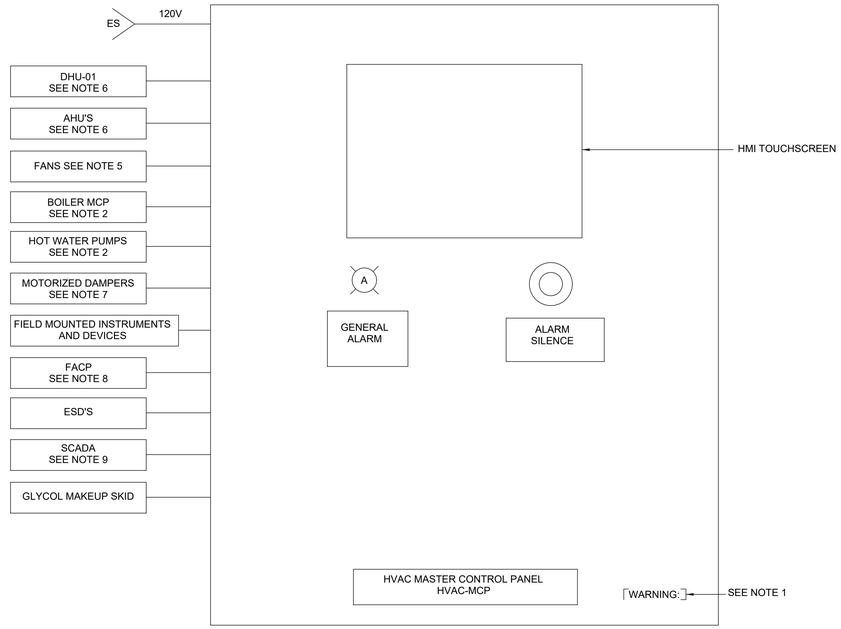

(LOCATED IN HVAC ROOM 208)

HVAC MASTER CONTROL PANEL

WARNING
IT IS A VIOLATION OF SECTION 7209.2 OF THE NEW YORK STATE EDUCATION LAW FOR ANY PERSON, UNLESS ACTING UNDER THE DIRECTION OF A LICENSED PROFESSIONAL ENGINEER, TO ALTER IN ANY WAY PLANS, SPECIFICATIONS, PLATS OR REPORTS TO WHICH THE SEAL OF A PROFESSIONAL ENGINEER HAS BEEN APPLIED. IF AN ITEM BEARING THE SEAL OF A PROFESSIONAL ENGINEER IS ALTERED, THE ALTERING ENGINEER SHALL AFFIX TO THE ITEM HIS SEAL AND THE NOTATION "ALTERED BY" FOLLOWED BY HIS SIGNATURE, THE DATE, AND A SPECIFIC DESCRIPTION OF THE ALTERATION.

REV	ISSUED FOR	DATE	BY

PROJECT ENGINEER:	R. FROST
DESIGNED BY:	M. GIORDANO
DRAWN BY:	R. CHIN
CHECKED BY:	R. VAN DYKE
IF THIS BAR DOES NOT MEASURE 1" THEN DRAWING IS NOT TO FULL SCALE	0 1/2" 1"

BID SET



Hazen
HAZEN AND SAWYER
498 SEVENTH AVENUE, 11th FLOOR
NEW YORK, NEW YORK 10018

WESTCHESTER JOINT WATER WORKS
MAMARONECK, NY

RYE LAKE WATER FILTRATION PLANT
HARRISON, NY

FILTRATION PLANT
HVAC
CONTROL DIAGRAMS - SHEET 6

DATE:	FEB 2025
HAZEN NO.:	90388-000
CONTRACT NO.:	A1364-A
DRAWING NUMBER:	H-007

Autodesk Docs://90388-000_Rye_Lake_Filtration/90388-000-WFP-H.rvt
2/18/2025 2:42:23 PM

NOTES:

1. THE WORK OF OTHER DISCIPLINES IS HALF-TONE OR HIDDEN FOR CLARITY. REFER TO CONTRACT DRAWINGS OF OTHER DISCIPLINES FOR ADDITIONAL WORK BY OTHERS.

PLANT NORTH

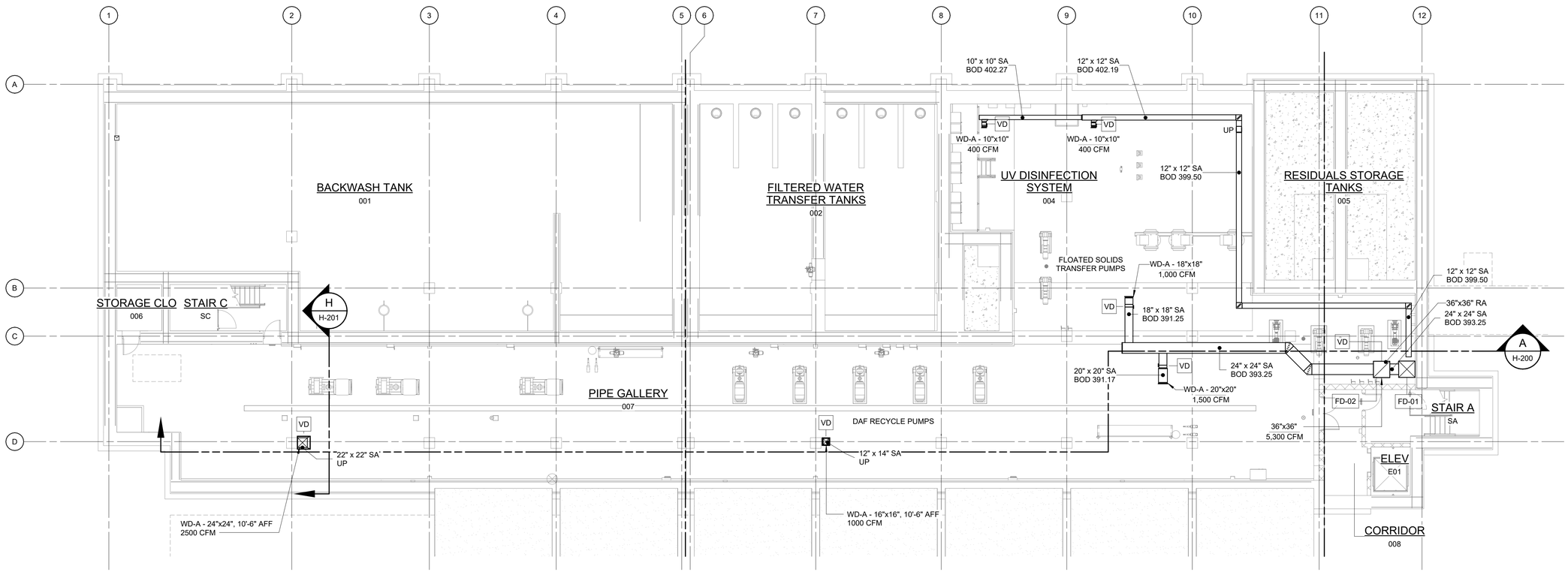

EL 383.00 - OVERALL PLAN

3/32" = 1'-0"

3/32" = 1'-0" 10 8 6 4 2 0 11'

WARNING
IT IS A VIOLATION OF SECTION 7209.2 OF THE NEW YORK STATE EDUCATION LAW FOR ANY PERSON, UNLESS ACTING UNDER THE DIRECTION OF A LICENSED PROFESSIONAL ENGINEER, TO ALTER IN ANY WAY PLANS, SPECIFICATIONS, PLATS OR REPORTS TO WHICH THE SEAL OF A PROFESSIONAL ENGINEER HAS BEEN APPLIED. IF AN ITEM BEARING THE SEAL OF A PROFESSIONAL ENGINEER IS ALTERED, THE ALTERING ENGINEER SHALL AFFIX TO THE ITEM HIS SEAL AND THE NOTATION "ALTERED BY" FOLLOWED BY HIS SIGNATURE, THE DATE, AND A SPECIFIC DESCRIPTION OF THE ALTERATION.

REV	ISSUED FOR	DATE	BY

PROJECT ENGINEER:	R. FROST
DESIGNED BY:	M. GIORDANO
DRAWN BY:	R. CHIN
CHECKED BY:	R. VAN DYKE

IF THIS BAR DOES NOT MEASURE 1" THEN DRAWING IS NOT TO FULL SCALE 0 1/2" 1"

BID SET

Hazen
HAZEN AND SAWYER
498 SEVENTH AVENUE, 11th FLOOR
NEW YORK, NEW YORK 10018

WESTCHESTER JOINT WATER WORKS
MAMARONECK, NY

RYE LAKE WATER FILTRATION PLANT
HARRISON, NY

FILTRATION PLANT
HVAC
EL. 383.00 - OVERALL PLAN

DATE:	FEB 2025
HAZEN NO.:	90388-000
CONTRACT NO.:	A1364-A
DRAWING NUMBER:	H-100

Autodesk Docs://90388-000_Rye_Lake_Filtration/90388-000-WFP-H.rvt
2/18/2025 2:42:24 PM

NOTES:

1. THE WORK OF OTHER DISCIPLINES IS HALF-TONE OR HIDDEN FOR CLARITY. REFER TO CONTRACT DRAWINGS OF OTHER DISCIPLINES FOR ADDITIONAL WORK BY OTHERS.
2. ATTACH BAROMETRIC RELIEF DAMPER TO LOUVER, WITH ADJUSTABLE COUNTERWEIGHTS FOR SETTING RELIEF PRESSURE TO 0.1 INWG. BASIS OF DESIGN SHALL BE GREENHECK EM-30 SERIES.

PLANT NORTH

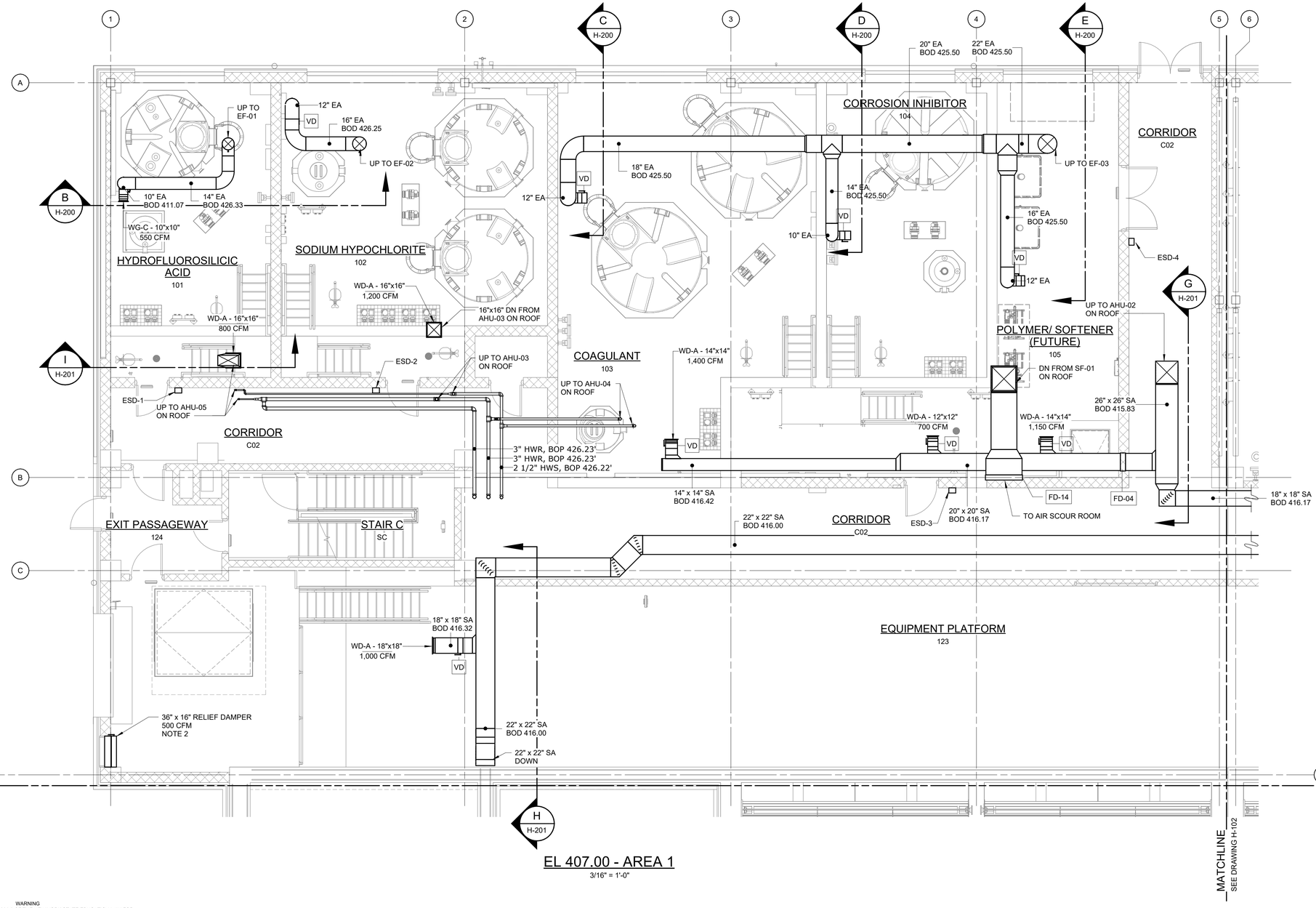

EL 407.00 - AREA 1

3/16" = 1'-0"

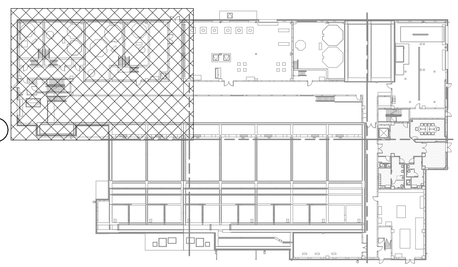

KEY PLAN

NTS

3/16" = 1'-0"

WARNING
IT IS A VIOLATION OF SECTION 7209.2 OF THE NEW YORK STATE EDUCATION LAW FOR ANY PERSON, UNLESS ACTING UNDER THE DIRECTION OF A LICENSED PROFESSIONAL ENGINEER, TO ALTER IN ANY WAY PLANS, SPECIFICATIONS, PLATS OR REPORTS TO WHICH THE SEAL OF A PROFESSIONAL ENGINEER HAS BEEN APPLIED. IF AN ITEM BEARING THE SEAL OF A PROFESSIONAL ENGINEER IS ALTERED, THE ALTERING ENGINEER SHALL AFFIX TO THE ITEM HIS SEAL AND THE NOTATION "ALTERED BY" FOLLOWED BY HIS SIGNATURE, THE DATE, AND A SPECIFIC DESCRIPTION OF THE ALTERATION.

REV	ISSUED FOR	DATE	BY

PROJECT ENGINEER:	R. FROST
DESIGNED BY:	M. GIORDANO
DRAWN BY:	R. CHIN
CHECKED BY:	R. VAN DYKE

IF THIS BAR DOES NOT MEASURE 1" THEN DRAWING IS NOT TO FULL SCALE (0, 1/2", 1")

BID SET

STATE OF NEW YORK · MARC A. GIORDANO · 099858 · PROFESSIONAL ENGINEER

Hazen

HAZEN AND SAWYER
498 SEVENTH AVENUE, 11th FLOOR
NEW YORK, NEW YORK 10018

WESTCHESTER JOINT WATER WORKS
MAMARONECK, NY

RYE LAKE WATER FILTRATION PLANT
HARRISON, NY

FILTRATION PLANT
HVAC
EL. 407.00 - AREA 1

DATE:	FEB 2025
HAZEN NO.:	90388-000
CONTRACT NO.:	A1364-A
DRAWING NUMBER:	H-101

Autodesk Docs://90388-000_Rye_Lake_Filtration/90388-000-WFP-H.rvt
2/18/2025 2:42:26 PM

NOTES:

1. THE WORK OF OTHER DISCIPLINES IS HALF-TONE OR HIDDEN FOR CLARITY. REFER TO CONTRACT DRAWINGS OF OTHER DISCIPLINES FOR ADDITIONAL WORK BY OTHERS.
2. ATTACH BAROMETRIC RELIEF DAMPER TO LOUVER, WITH ADJUSTABLE COUNTERWEIGHTS FOR SETTING RELIEF PRESSURE TO 0.1 INWG. BASIS OF DESIGN SHALL BE GREENHECK EM-30 SERIES.

N
PLANT NORTH

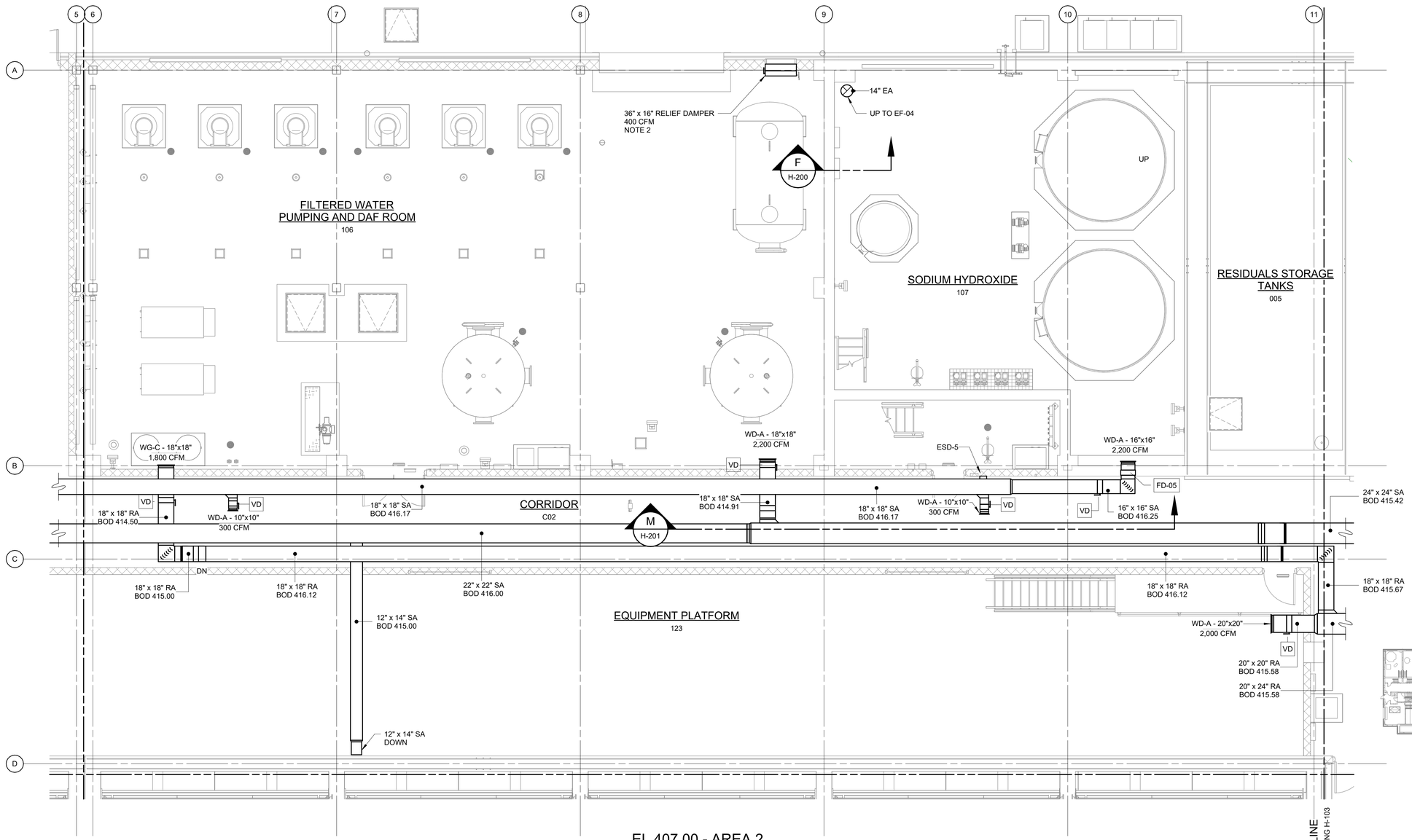

EL 407.00 - AREA 2

3/16" = 1'-0"

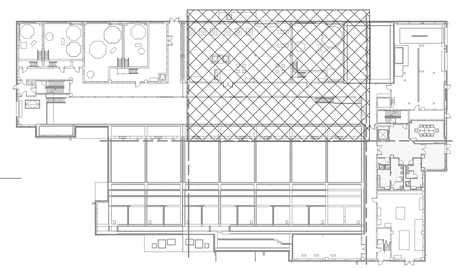

KEY PLAN

NTS

3/16" = 1'-0"

WARNING
IT IS A VIOLATION OF SECTION 7209.2 OF THE NEW YORK STATE EDUCATION LAW FOR ANY PERSON, UNLESS ACTING UNDER THE DIRECTION OF A LICENSED PROFESSIONAL ENGINEER, TO ALTER IN ANY WAY PLANS, SPECIFICATIONS, PLATS OR REPORTS TO WHICH THE SEAL OF A PROFESSIONAL ENGINEER HAS BEEN APPLIED. IF AN ITEM BEARING THE SEAL OF A PROFESSIONAL ENGINEER IS ALTERED, THE ALTERING ENGINEER SHALL AFFIX TO THE ITEM HIS SEAL AND THE NOTATION "ALTERED BY" FOLLOWED BY HIS SIGNATURE, THE DATE, AND A SPECIFIC DESCRIPTION OF THE ALTERATION.

REV	ISSUED FOR	DATE	BY

PROJECT ENGINEER:	R. FROST
DESIGNED BY:	M. GIORDANO
DRAWN BY:	R. CHIN
CHECKED BY:	R. VAN DYKE
IF THIS BAR DOES NOT MEASURE 1" THEN DRAWING IS NOT TO FULL SCALE	0 1/2" 1"

BID SET

MARC A. GIORDANO — STATE OF NEW YORK — 099858 — PROFESSIONAL ENGINEER

Hazen
HAZEN AND SAWYER
498 SEVENTH AVENUE, 11th FLOOR
NEW YORK, NEW YORK 10018

WESTCHESTER JOINT WATER WORKS
MAMARONECK, NY

RYE LAKE WATER FILTRATION PLANT
HARRISON, NY

FILTRATION PLANT
HVAC
EL. 407.00 - AREA 2

DATE:	FEB 2025
HAZEN NO.:	90388-000
CONTRACT NO.:	A1364-A
DRAWING NUMBER:	H-102

Autodesk Docs://90388-000_Rye_Lake_Filtration/90388-000-WFP-H.rvt
2/18/2025 2:42:29 PM

PLANT NORTH

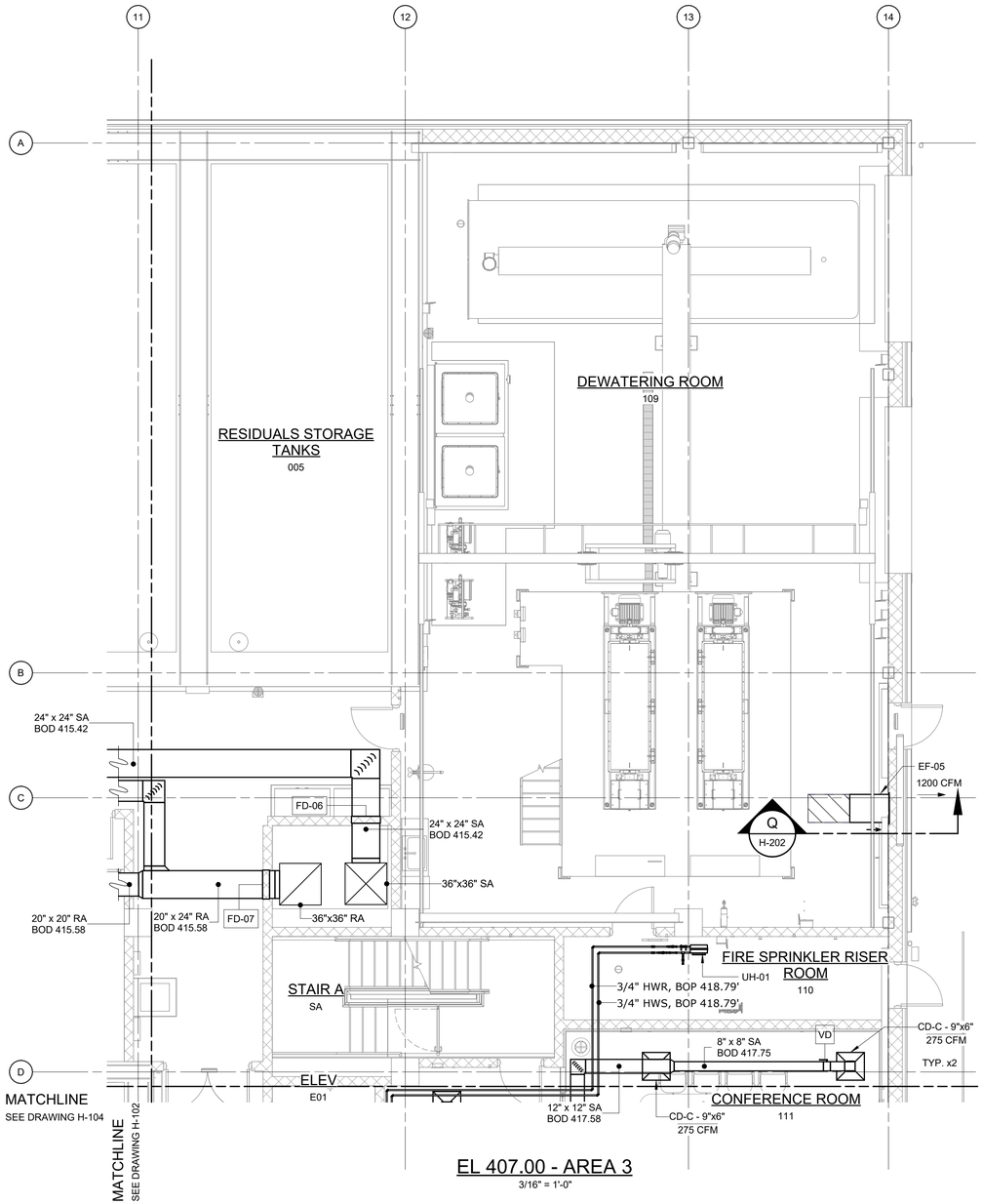

EL 407.00 - AREA 3

3/16" = 1'-0"

NOTES:

1. THE WORK OF OTHER DISCIPLINES IS HALF-TONE OR HIDDEN FOR CLARITY. REFER TO CONTRACT DRAWINGS OF OTHER DISCIPLINES FOR ADDITIONAL WORK BY OTHERS.
2. COORDINATE ALL CEILING DIFFUSERS WITH REFLECTED CEILING PLAN ON THE ARCHITECTURAL DRAWINGS.

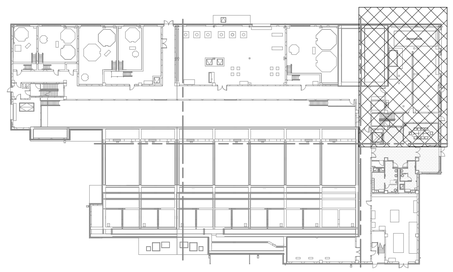

KEY PLAN

NTS

3/16" = 1'-0"

WARNING
IT IS A VIOLATION OF SECTION 7209.2 OF THE NEW YORK STATE EDUCATION LAW FOR ANY PERSON, UNLESS ACTING UNDER THE DIRECTION OF A LICENSED PROFESSIONAL ENGINEER, TO ALTER IN ANY WAY PLANS, SPECIFICATIONS, PLATS OR REPORTS TO WHICH THE SEAL OF A PROFESSIONAL ENGINEER HAS BEEN APPLIED. IF AN ITEM BEARING THE SEAL OF A PROFESSIONAL ENGINEER IS ALTERED, THE ALTERING ENGINEER SHALL AFFIX TO THE ITEM HIS SEAL AND THE NOTATION "ALTERED BY" FOLLOWED BY HIS SIGNATURE, THE DATE, AND A SPECIFIC DESCRIPTION OF THE ALTERATION.

REV	ISSUED FOR	DATE	BY

PROJECT ENGINEER:	R. FROST
DESIGNED BY:	M. GIORDANO
DRAWN BY:	R. CHIN
CHECKED BY:	R. VAN DYKE

IF THIS BAR DOES NOT MEASURE 1" THEN DRAWING IS NOT TO FULL SCALE 0 1/2" 1"

BID SET

MARC A. GIORDANO — STATE OF NEW YORK — 099868 — LICENSED PROFESSIONAL ENGINEER

Hazen

HAZEN AND SAWYER
498 SEVENTH AVENUE, 11th FLOOR
NEW YORK, NEW YORK 10018

WESTCHESTER JOINT WATER WORKS
MAMARONECK, NY

RYE LAKE WATER FILTRATION PLANT
HARRISON, NY

FILTRATION PLANT
HVAC
EL. 407.00 - AREA 3

DATE:	FEB 2025
HAZEN NO.:	90388-000
CONTRACT NO.:	A1364-A
DRAWING NUMBER:	H-103

Autodesk Docs://90388-000_Rye_Lake_Filtration/90388-000-WFP-H.rvt
2/19/2025 2:42:33 PM

PLANT NORTH

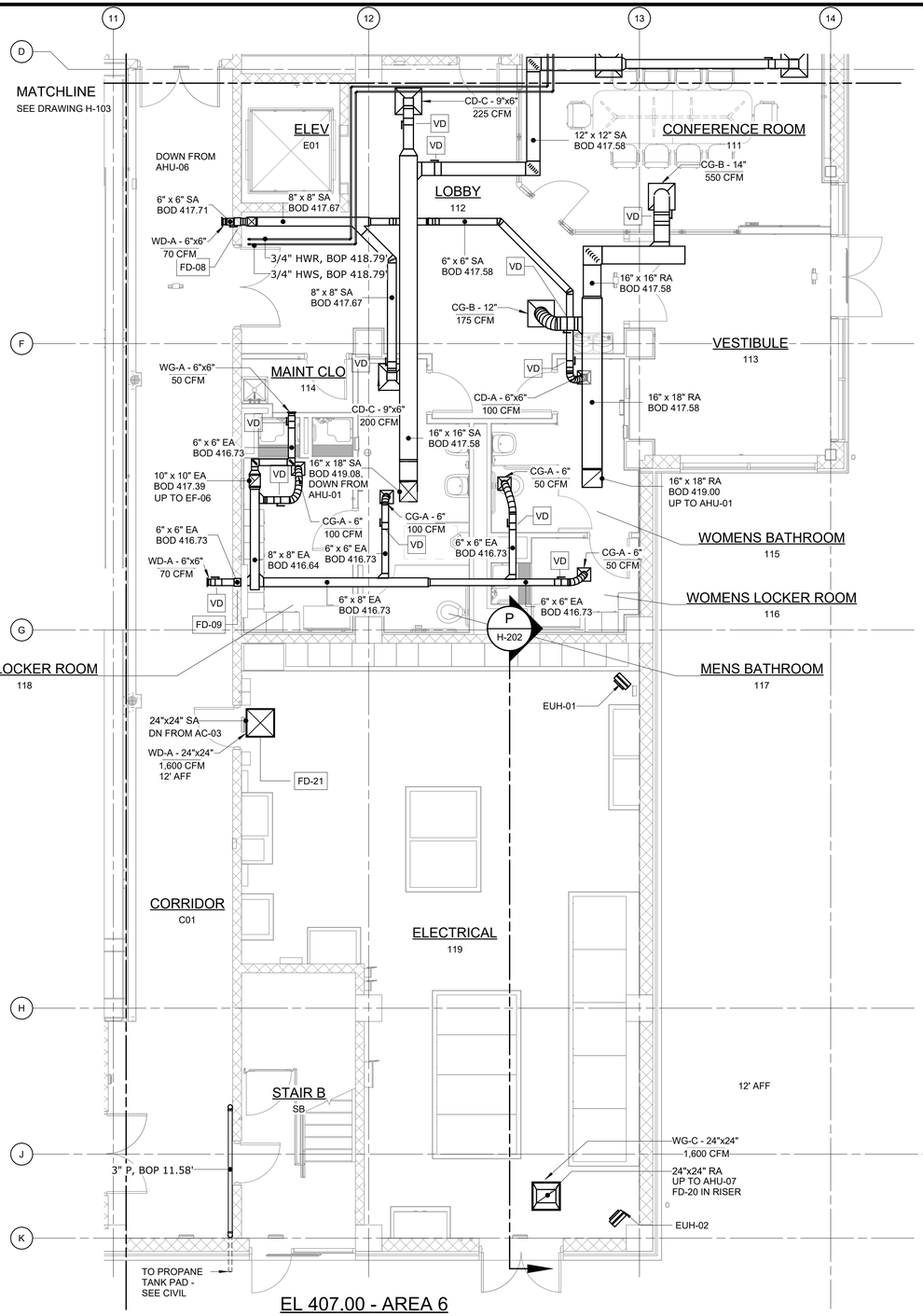

EL 407.00 - AREA 6

3/16" = 1'-0"

NOTES:

1. THE WORK OF OTHER DISCIPLINES IS HALF-TONE OR HIDDEN FOR CLARITY. REFER TO CONTRACT DRAWINGS OF OTHER DISCIPLINES FOR ADDITIONAL WORK BY OTHERS.
2. COORDINATE ALL CEILING DIFFUSERS WITH REFLECTED CEILING PLAN ON THE ARCHITECTURAL DRAWINGS.

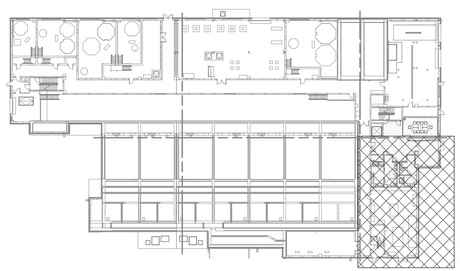

KEY PLAN

NTS

3/16" = 1'-0" 6 4 2 0 5'

WARNING
IT IS A VIOLATION OF SECTION 7209.2 OF THE NEW YORK STATE EDUCATION LAW FOR ANY PERSON, UNLESS ACTING UNDER THE DIRECTION OF A LICENSED PROFESSIONAL ENGINEER, TO ALTER IN ANY WAY PLANS, SPECIFICATIONS, PLATS OR REPORTS TO WHICH THE SEAL OF A PROFESSIONAL ENGINEER HAS BEEN APPLIED. IF AN ITEM BEARING THE SEAL OF A PROFESSIONAL ENGINEER IS ALTERED, THE ALTERING ENGINEER SHALL AFFIX TO THE ITEM HIS SEAL AND THE NOTATION "ALTERED BY" FOLLOWED BY HIS SIGNATURE, THE DATE, AND A SPECIFIC DESCRIPTION OF THE ALTERATION.

REV	ISSUED FOR	DATE	BY

PROJECT ENGINEER:	R. FROST
DESIGNED BY:	M. GIORDANO
DRAWN BY:	R. CHIN
CHECKED BY:	R. VAN DYKE

IF THIS BAR DOES NOT MEASURE 1" THEN DRAWING IS NOT TO FULL SCALE 0 1/2" 1"

BID SET

STATE OF NEW YORK · MARC A. GIORDANO · 099858 · LICENSED PROFESSIONAL ENGINEER

Hazen

HAZEN AND SAWYER
498 SEVENTH AVENUE, 11th FLOOR
NEW YORK, NEW YORK 10018

WESTCHESTER JOINT WATER WORKS
MAMARONECK, NY

RYE LAKE WATER FILTRATION PLANT
HARRISON, NY

FILTRATION PLANT
HVAC
EL. 407.00 - AREA 6

DATE:	FEB 2025
HAZEN NO.:	90388-000
CONTRACT NO.:	A1364-A
DRAWING NUMBER:	H-104

Autodesk Docs://90388-000_Rye_Lake_Filtration/90388-000-WFP-H.rvt
2/18/2025 2:42:39 PM

NOTES:

1. THE WORK OF OTHER DISCIPLINES IS HALF-TONE OR HIDDEN FOR CLARITY. REFER TO CONTRACT DRAWINGS OF OTHER DISCIPLINES FOR ADDITIONAL WORK BY OTHERS.
2. THE ROOF AREA AT EL. 429.33 IS DEPICTED BETWEEN COLUMN LINES 1 & 11 AND COLUMN LINES A & B.

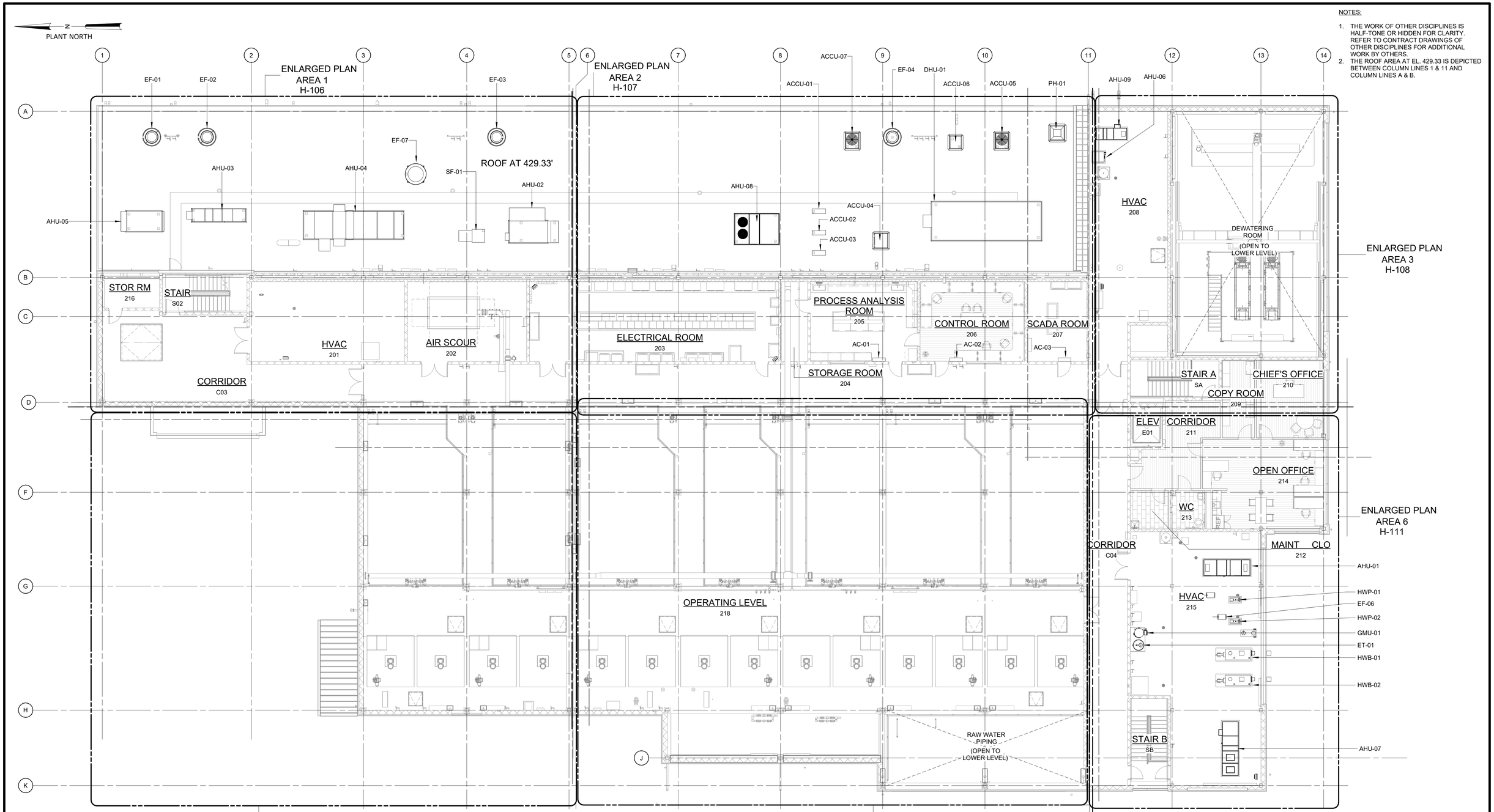

EL 421.00 & EL 429.33 - OVERALL PLAN

3/32" = 1'-0"

3/32" = 1'-0"

10 8 6 4 2 0 11'

WARNING
IT IS A VIOLATION OF SECTION 7209.2 OF THE NEW YORK STATE EDUCATION LAW FOR ANY PERSON, UNLESS ACTING UNDER THE DIRECTION OF A LICENSED PROFESSIONAL ENGINEER, TO ALTER IN ANY WAY PLANS, SPECIFICATIONS, PLATS OR REPORTS TO WHICH THE SEAL OF A PROFESSIONAL ENGINEER HAS BEEN APPLIED. IF AN ITEM BEARING THE SEAL OF A PROFESSIONAL ENGINEER IS ALTERED, THE ALTERING ENGINEER SHALL AFFIX TO THE ITEM HIS SEAL AND THE NOTATION "ALTERED BY" FOLLOWED BY HIS SIGNATURE, THE DATE, AND A SPECIFIC DESCRIPTION OF THE ALTERATION.

REV	ISSUED FOR	DATE	BY

PROJECT ENGINEER:	R. FROST
DESIGNED BY:	M. GIORDANO
DRAWN BY:	R. CHIN
CHECKED BY:	R. VAN DYKE
IF THIS BAR DOES NOT MEASURE 1" THEN DRAWING IS NOT TO FULL SCALE	0 1/2" 1"

BID SET

STATE OF NEW YORK · MARC A. GIORDANO · 099858 · LICENSED PROFESSIONAL ENGINEER

Hazen

HAZEN AND SAWYER
498 SEVENTH AVENUE, 11th FLOOR
NEW YORK, NEW YORK 10018

WESTCHESTER JOINT WATER WORKS
MAMARONECK, NY

RYE LAKE WATER FILTRATION PLANT
HARRISON, NY

FILTRATION PLANT
HVAC
EL. 421.00 & EL. 429.33 - OVERALL PLAN

DATE:	FEB 2025
HAZEN NO.:	90388-000
CONTRACT NO.:	A1364-A
DRAWING NUMBER:	H-105

Autodesk Docs://90388-000_Rye_Lake_Filtration/90388-000-WFP-H.rvt
2/18/2025 2:42:52 PM

NOTES:

1. THE WORK OF OTHER DISCIPLINES IS HALF-TONE OR HIDDEN FOR CLARITY. REFER TO CONTRACT DRAWINGS OF OTHER DISCIPLINES FOR ADDITIONAL WORK BY OTHERS.
2. THE ROOF AREA AT EL. 429.33 IS DEPICTED BETWEEN COLUMN LINES 1 & 6 AND COLUMN LINES A & B.

PLANT NORTH

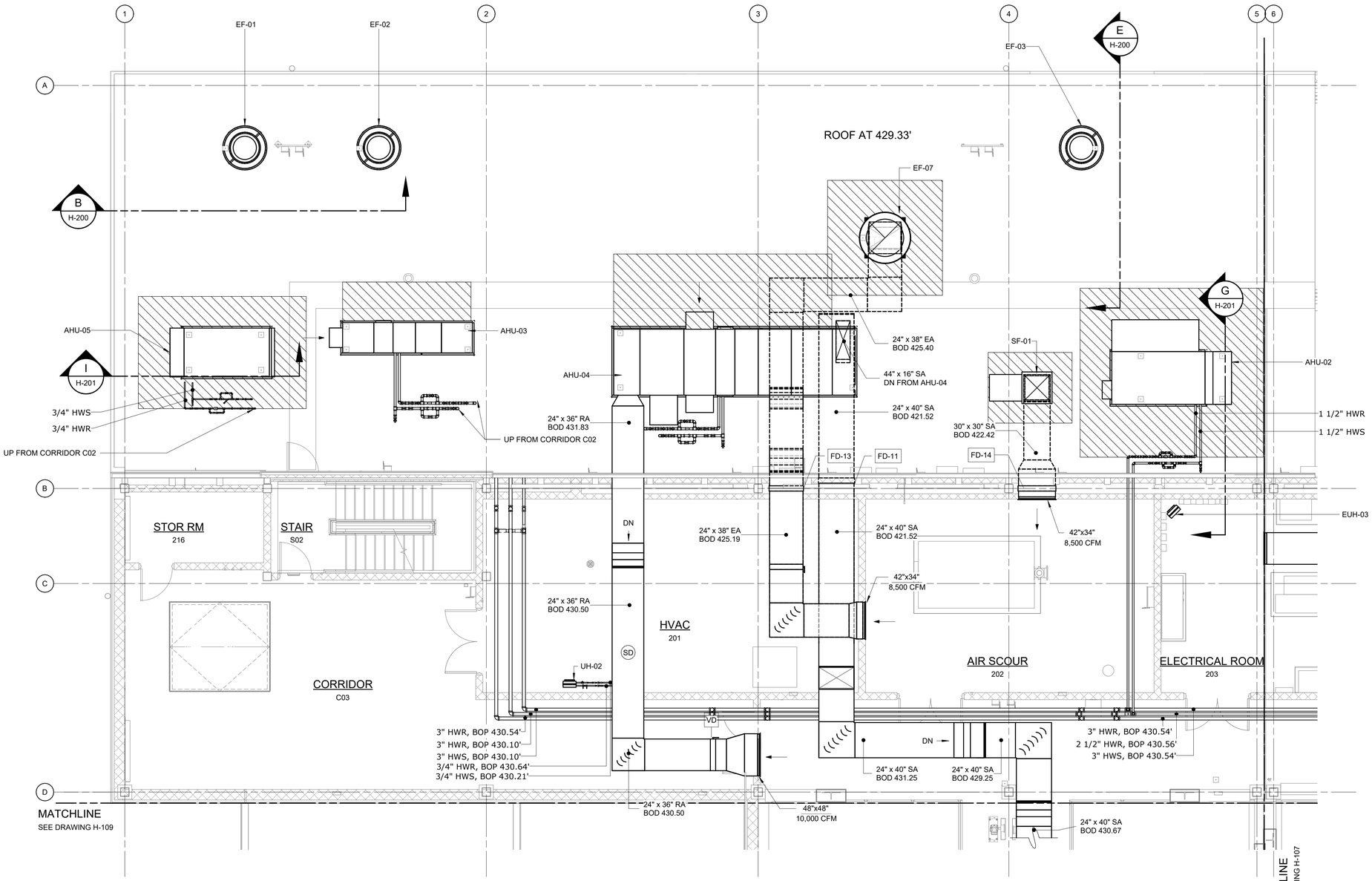

EL 421.00 & EL. 429.33 - AREA 1

3/16" = 1'-0"

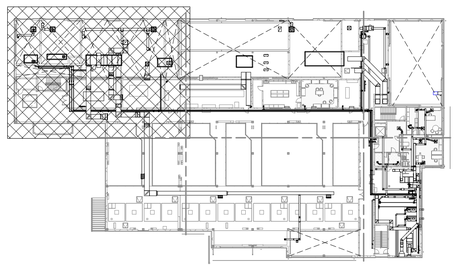

KEY PLAN

NTS

3/16" = 1'-0"

6 4 2 0 5'

WARNING
IT IS A VIOLATION OF SECTION 7209.2 OF THE NEW YORK STATE EDUCATION LAW FOR ANY PERSON, UNLESS ACTING UNDER THE DIRECTION OF A LICENSED PROFESSIONAL ENGINEER, TO ALTER IN ANY WAY PLANS, SPECIFICATIONS, PLATS OR REPORTS TO WHICH THE SEAL OF A PROFESSIONAL ENGINEER HAS BEEN APPLIED. IF AN ITEM BEARING THE SEAL OF A PROFESSIONAL ENGINEER IS ALTERED, THE ALTERING ENGINEER SHALL AFFIX TO THE ITEM HIS SEAL AND THE NOTATION "ALTERED BY" FOLLOWED BY HIS SIGNATURE, THE DATE, AND A SPECIFIC DESCRIPTION OF THE ALTERATION.

REV	ISSUED FOR	DATE	BY

PROJECT ENGINEER:	R. FROST
DESIGNED BY:	M. GIORDANO
DRAWN BY:	R. CHIN
CHECKED BY:	R. VAN DYKE

IF THIS BAR DOES NOT MEASURE 1" THEN DRAWING IS NOT TO FULL SCALE 0 1/2" 1"

BID SET

STATE OF NEW YORK · MARC A. GIORDANO · 099858 · LICENSED PROFESSIONAL ENGINEER

Hazen

HAZEN AND SAWYER
498 SEVENTH AVENUE, 11th FLOOR
NEW YORK, NEW YORK 10018

WESTCHESTER JOINT WATER WORKS
MAMARONECK, NY

RYE LAKE WATER FILTRATION PLANT
HARRISON, NY

FILTRATION PLANT
HVAC
EL. 421.00 & EL. 429.33 - AREA 1

DATE:	FEB 2025
HAZEN NO.:	90388-000
CONTRACT NO.:	A1364-A
DRAWING NUMBER:	H-106

Autodesk Docs://90388-000_Rye_Lake_Filtration/90388-000-WFP-H.rvt
2/19/2025 2:43:02 PM

NOTES:

1. THE WORK OF OTHER DISCIPLINES IS HALF-TONE OR HIDDEN FOR CLARITY. REFER TO CONTRACT DRAWINGS OF OTHER DISCIPLINES FOR ADDITIONAL WORK BY OTHERS.
2. THE ROOF AREA AT EL. 429.33 IS DEPICTED BETWEEN COLUMN LINES 5 & 11 AND COLUMN LINES A & B.
3. CLEARANCE FOR MAINTAINANCE ACCESS BEHIND DHU-01 IS BELOW RETURN AIR DUCT.
4. PROVIDE VARIABLE AREA MITERED ELBOW WITH TURNING VANES AT SIDE INLET TO UNIT.

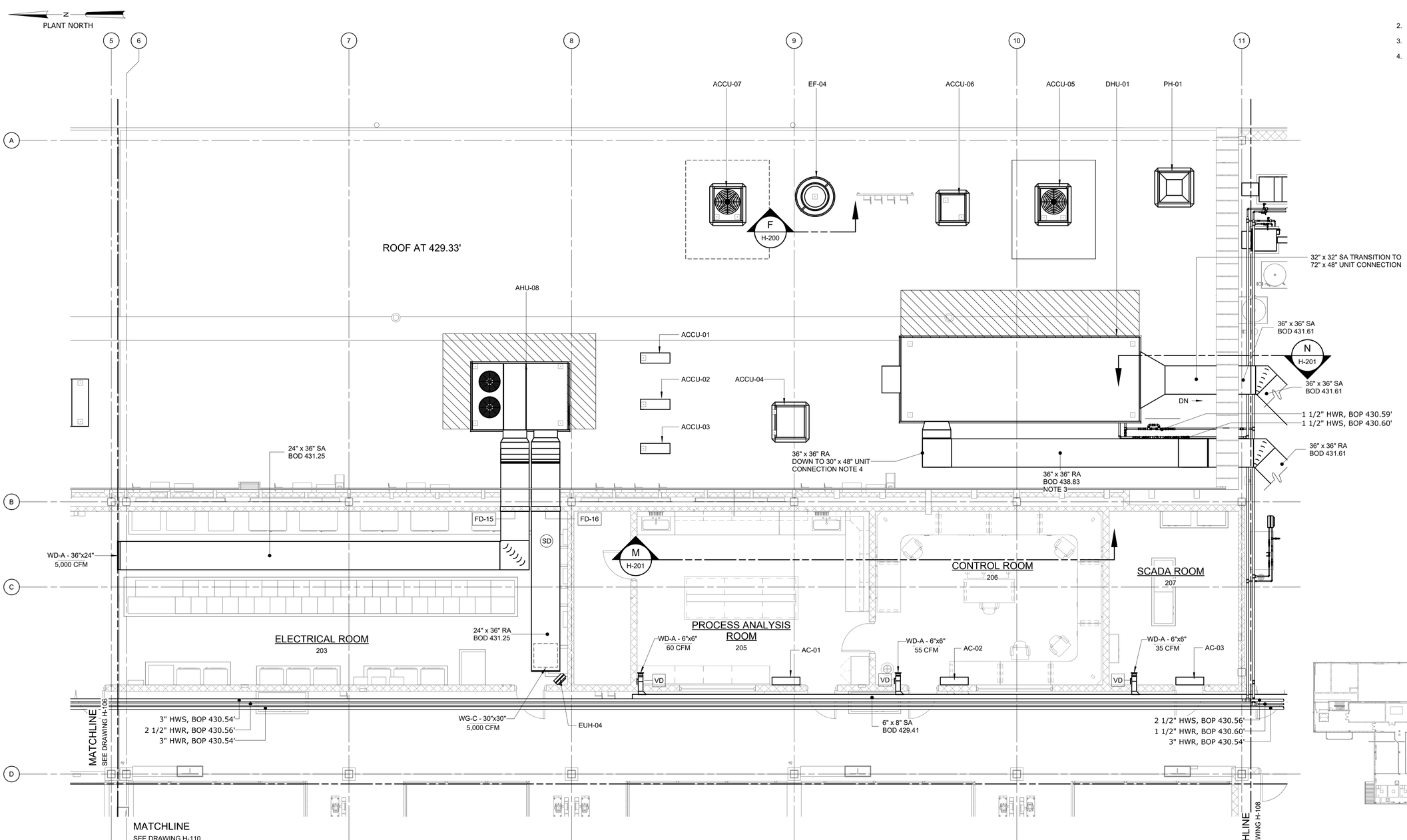

EL 421.00 & EL 429.33 - AREA 2

3/16" = 1'-0"

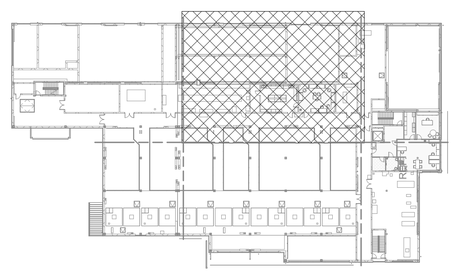

KEY PLAN

NTS

3/16" = 1'-0"

WARNING
IT IS A VIOLATION OF SECTION 7209.2 OF THE NEW YORK STATE EDUCATION LAW FOR ANY PERSON, UNLESS ACTING UNDER THE DIRECTION OF A LICENSED PROFESSIONAL ENGINEER, TO ALTER IN ANY WAY PLANS, SPECIFICATIONS, PLATS OR REPORTS TO WHICH THE SEAL OF A PROFESSIONAL ENGINEER HAS BEEN APPLIED. IF AN ITEM BEARING THE SEAL OF A PROFESSIONAL ENGINEER IS ALTERED, THE ALTERING ENGINEER SHALL AFFIX TO THE ITEM HIS SEAL AND THE NOTATION "ALTERED BY" FOLLOWED BY HIS SIGNATURE, THE DATE, AND A SPECIFIC DESCRIPTION OF THE ALTERATION.

REV	ISSUED FOR	DATE	BY

PROJECT ENGINEER:	R. FROST
DESIGNED BY:	M. GIORDANO
DRAWN BY:	R. CHIN
CHECKED BY:	R. VAN DYKE

IF THIS BAR DOES NOT MEASURE 1" THEN DRAWING IS NOT TO FULL SCALE 0 1/2" 1"

BID SET

MARC A. GIORDANO — STATE OF NEW YORK — 099858 — LICENSED PROFESSIONAL ENGINEER

Hazen

HAZEN AND SAWYER
498 SEVENTH AVENUE, 11th FLOOR
NEW YORK, NEW YORK 10018

WESTCHESTER JOINT WATER WORKS
MAMARONECK, NY

RYE LAKE WATER FILTRATION PLANT
HARRISON, NY

FILTRATION PLANT
HVAC
EL. 421.00 & EL. 429.33 - AREA 2

DATE:	FEB 2025
HAZEN NO.:	90388-000
CONTRACT NO.:	A1364-A
DRAWING NUMBER:	H-107

Autodesk Docs://90388-000_Rye_Lake_Filtration/90388-000-WFP-H.rvt
2/19/2025 2:43:09 PM

NOTES:

1. THE WORK OF OTHER DISCIPLINES IS HALF-TONE OR HIDDEN FOR CLARITY. REFER TO CONTRACT DRAWINGS OF OTHER DISCIPLINES FOR ADDITIONAL WORK BY OTHERS.
2. COORDINATE ALL CEILING DIFFUSERS WITH REFLECTED CEILING PLAN ON THE ARCHITECTURAL DRAWINGS.

N
PLANT NORTH

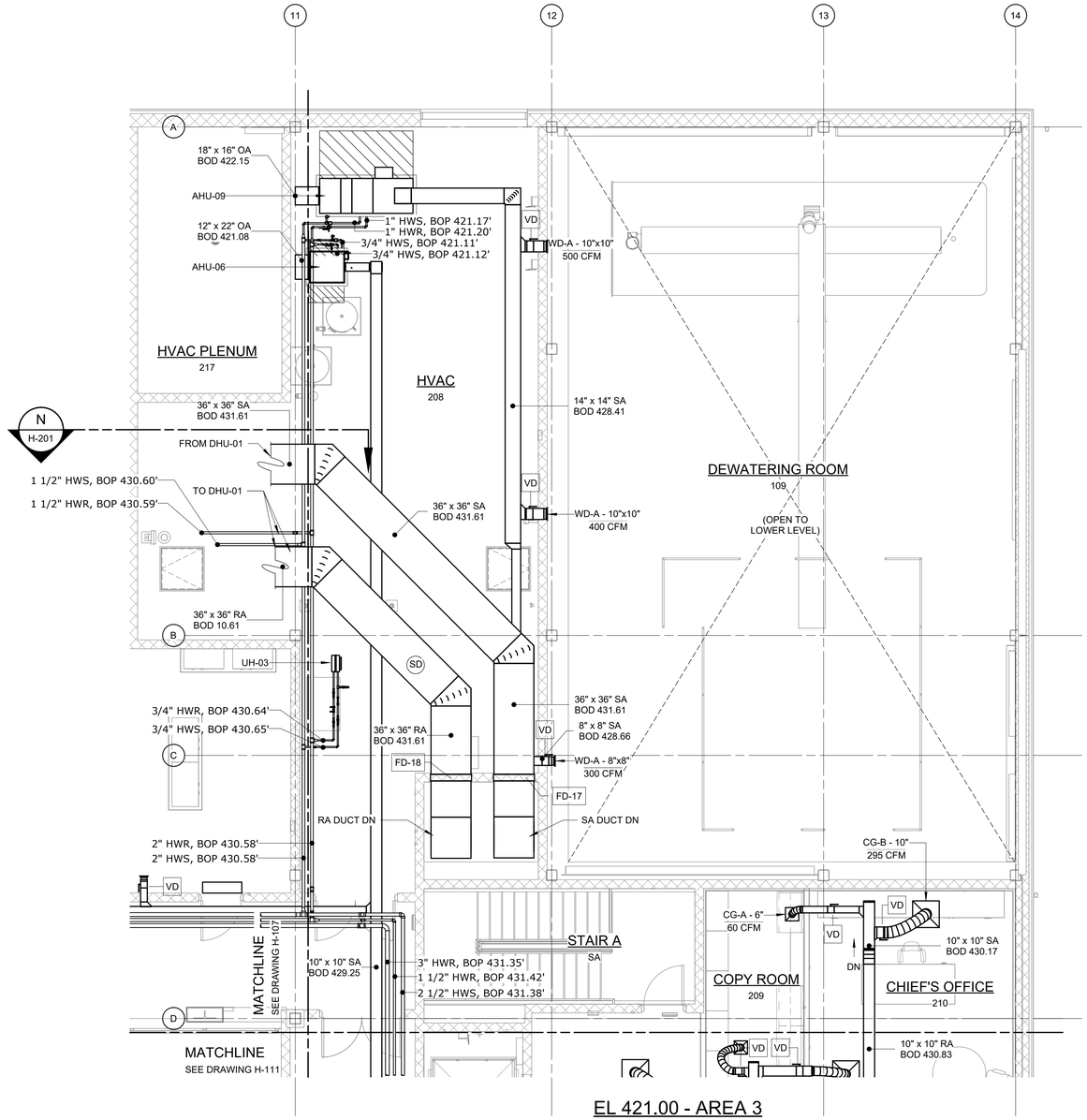

EL 421.00 - AREA 3
3/16" = 1'-0"

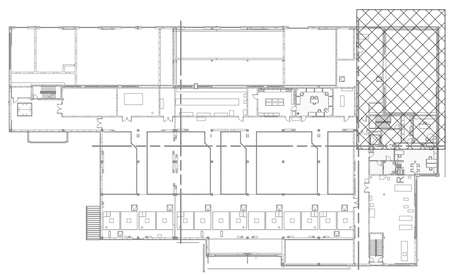

KEY PLAN
NTS

3/16" = 1'-0"
6 4 2 0 5'

WARNING
IT IS A VIOLATION OF SECTION 7209.2 OF THE NEW YORK STATE EDUCATION LAW FOR ANY PERSON, UNLESS ACTING UNDER THE DIRECTION OF A LICENSED PROFESSIONAL ENGINEER, TO ALTER IN ANY WAY PLANS, SPECIFICATIONS, PLATS OR REPORTS TO WHICH THE SEAL OF A PROFESSIONAL ENGINEER HAS BEEN APPLIED. IF AN ITEM BEARING THE SEAL OF A PROFESSIONAL ENGINEER IS ALTERED, THE ALTERING ENGINEER SHALL AFFIX TO THE ITEM HIS SEAL AND THE NOTATION "ALTERED BY" FOLLOWED BY HIS SIGNATURE, THE DATE, AND A SPECIFIC DESCRIPTION OF THE ALTERATION.

REV	ISSUED FOR	DATE	BY

PROJECT ENGINEER:	R. FROST
DESIGNED BY:	M. GIORDANO
DRAWN BY:	R. CHIN
CHECKED BY:	R. VAN DYKE

IF THIS BAR DOES NOT MEASURE 1" THEN DRAWING IS NOT TO FULL SCALE 0 1/2" 1"

BID SET

STATE OF NEW YORK · MARC A. GIORDANO · 099858 · PROFESSIONAL ENGINEER

Hazen

HAZEN AND SAWYER
498 SEVENTH AVENUE, 11th FLOOR
NEW YORK, NEW YORK 10018

WESTCHESTER JOINT WATER WORKS
MAMARONECK, NY

RYE LAKE WATER FILTRATION PLANT
HARRISON, NY

FILTRATION PLANT
HVAC
EL. 421.00 - AREA 3

DATE:	FEB 2025
HAZEN NO.:	90388-000
CONTRACT NO.:	A1364-A
DRAWING NUMBER:	H-108

Autodesk Docs://90388-000_Rye_Lake_Filtration/90388-000-WFP-H.rvt
2/18/2025 2:43:14 PM

NOTES:

1. THE WORK OF OTHER DISCIPLINES IS HALF-TONE OR HIDDEN FOR CLARITY. REFER TO CONTRACT DRAWINGS OF OTHER DISCIPLINES FOR ADDITIONAL WORK BY OTHERS.

N
PLANT NORTH

1 2 3 4 5 6

D F G H

MATCHLINE
SEE DRAWING H-106

MATCHLINE
SEE DRAWING H-110

24" x 40" SA
BOD 429.25

24" x 40" SA
BOD 430.67

WD-A - 36"x24"
3,125 CFM

VD

24" x 40" SA
BOD 430.67

32" x 32" SA
BOD 430.00

OPERATING LEVEL
218

EL 421.00 - AREA 4
3/16" = 1'-0"

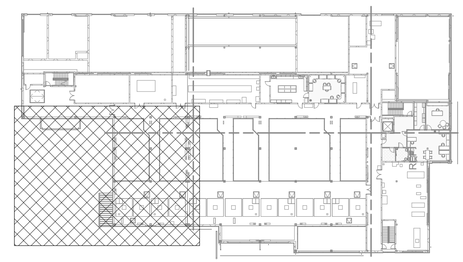

KEY PLAN
NTS

3/16" = 1'-0"

WARNING
IT IS A VIOLATION OF SECTION 7209.2 OF THE NEW YORK STATE EDUCATION LAW FOR ANY PERSON, UNLESS ACTING UNDER THE DIRECTION OF A LICENSED PROFESSIONAL ENGINEER, TO ALTER IN ANY WAY PLANS, SPECIFICATIONS, PLATS OR REPORTS TO WHICH THE SEAL OF A PROFESSIONAL ENGINEER HAS BEEN APPLIED. IF AN ITEM BEARING THE SEAL OF A PROFESSIONAL ENGINEER IS ALTERED, THE ALTERING ENGINEER SHALL AFFIX TO THE ITEM HIS SEAL AND THE NOTATION "ALTERED BY" FOLLOWED BY HIS SIGNATURE, THE DATE, AND A SPECIFIC DESCRIPTION OF THE ALTERATION.

REV	ISSUED FOR	DATE	BY

PROJECT ENGINEER:	R. FROST
DESIGNED BY:	M. GIORDANO
DRAWN BY:	R. CHIN
CHECKED BY:	R. VAN DYKE

IF THIS BAR DOES NOT MEASURE 1" THEN DRAWING IS NOT TO FULL SCALE 0 1/2" 1"

BID SET

STATE OF NEW YORK · MARC A. GIORDANO · 099858 · LICENSED PROFESSIONAL ENGINEER

Hazen
HAZEN AND SAWYER
498 SEVENTH AVENUE, 11th FLOOR
NEW YORK, NEW YORK 10018

WESTCHESTER JOINT WATER WORKS
MAMARONECK, NY

RYE LAKE WATER FILTRATION PLANT
HARRISON, NY

FILTRATION PLANT
HVAC
EL. 421.00 - AREA 4

DATE:	FEB 2025
HAZEN NO.:	90388-000
CONTRACT NO.:	A1364-A
DRAWING NUMBER:	H-109

Autodesk Docs://90388-000_Rye_Lake_Filtration/90388-000-WFP-H.rvt
2/19/2025 2:43:19 PM

NOTES:

1. THE WORK OF OTHER DISCIPLINES IS HALF-TONE OR HIDDEN FOR CLARITY. REFER TO CONTRACT DRAWINGS OF OTHER DISCIPLINES FOR ADDITIONAL WORK BY OTHERS.

PLANT NORTH

MATCHLINE
SEE DRAWING H-107

OPERATING LEVEL
218

32" x 32" SA
BOD 430.00

VD
WD-A - 36"x24"
3,125 CFM

24" x 24" SA
BOD 430.33

VD
WD-A - 36"x24"
3,125 CFM

12" x 12" SA
BOD 430.83

VD
WD-A - 10"x10"
250 CFM

VD
12"x12" SA

10" x 10" SA
BOD 427.97

WD-A - 12"x12"
375 CFM

OPEN TO SPACE BELOW

RAW WATER PIPING
120

MATCHLINE
SEE DRAWING H-109

MATCHLINE
SEE DRAWING H-111

EL 421.00 - AREA 5
3/16" = 1'-0"

KEY PLAN
NTS

3/16" = 1'-0"

WARNING
IT IS A VIOLATION OF SECTION 7209.2 OF THE NEW YORK STATE EDUCATION LAW FOR ANY PERSON, UNLESS ACTING UNDER THE DIRECTION OF A LICENSED PROFESSIONAL ENGINEER, TO ALTER IN ANY WAY PLANS, SPECIFICATIONS, PLATS OR REPORTS TO WHICH THE SEAL OF A PROFESSIONAL ENGINEER HAS BEEN APPLIED. IF AN ITEM BEARING THE SEAL OF A PROFESSIONAL ENGINEER IS ALTERED, THE ALTERING ENGINEER SHALL AFFIX TO THE ITEM HIS SEAL AND THE NOTATION "ALTERED BY" FOLLOWED BY HIS SIGNATURE, THE DATE, AND A SPECIFIC DESCRIPTION OF THE ALTERATION.

REV	ISSUED FOR	DATE	BY

PROJECT ENGINEER:	R. FROST
DESIGNED BY:	M. GIORDANO
DRAWN BY:	R. CHIN
CHECKED BY:	R. VAN DYKE

IF THIS BAR DOES NOT MEASURE 1" THEN DRAWING IS NOT TO FULL SCALE 0 1/2" 1"

BID SET

MARC A. GIORDANO — STATE OF NEW YORK — 099858 — LICENSED PROFESSIONAL ENGINEER

Hazen
HAZEN AND SAWYER
498 SEVENTH AVENUE, 11th FLOOR
NEW YORK, NEW YORK 10018

WESTCHESTER JOINT WATER WORKS
MAMARONECK, NY

RYE LAKE WATER FILTRATION PLANT
HARRISON, NY

FILTRATION PLANT
HVAC
EL. 421.00 - AREA 5

DATE:	FEB 2025
HAZEN NO.:	90388-000
CONTRACT NO.:	A1364-A
DRAWING NUMBER:	H-110

Autodesk Docs://90388-000_Rye_Lake_Filtration/90388-000-WFP-H.rvt
2/18/2025 2:43:24 PM

PLANT NORTH

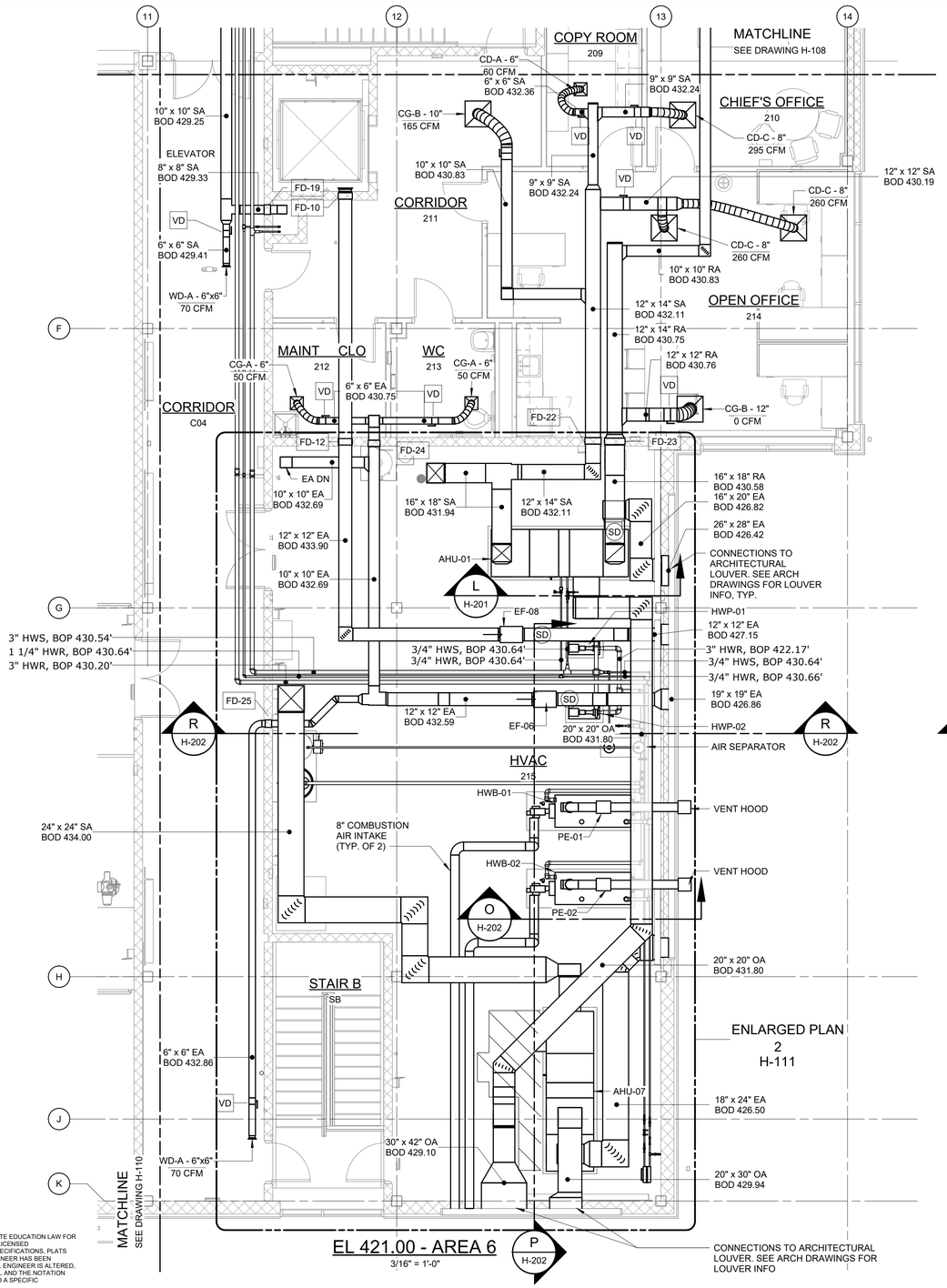

EL 421.00 - AREA 6

3/16" = 1'-0"

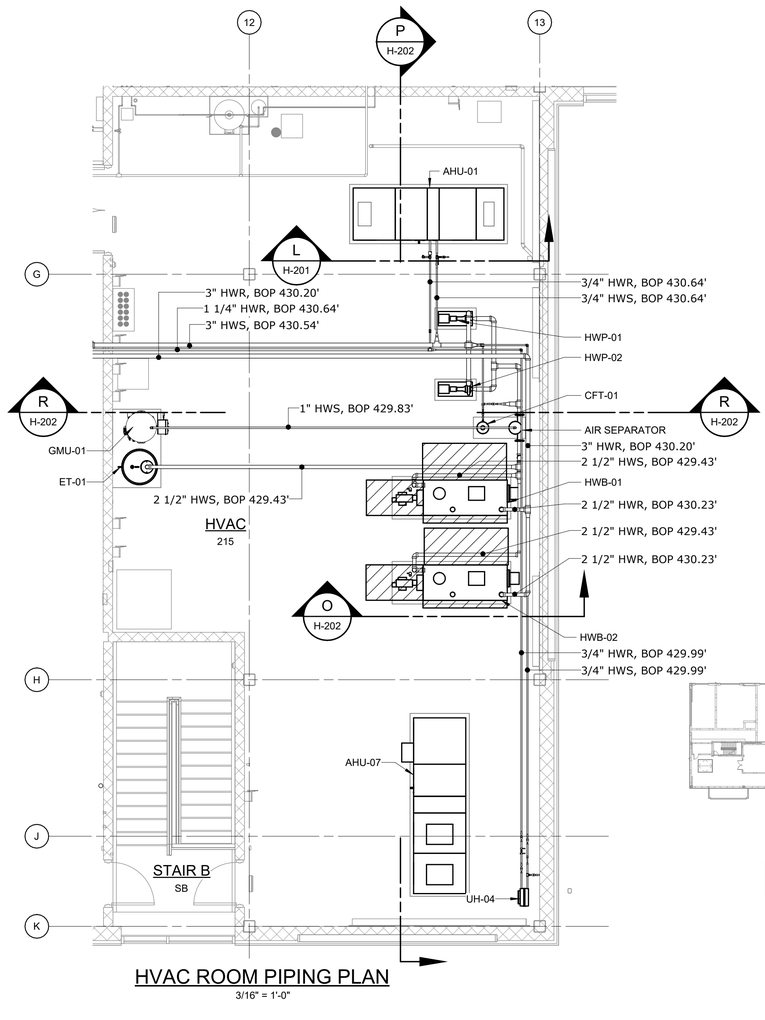

HVAC ROOM PIPING PLAN

3/16" = 1'-0"

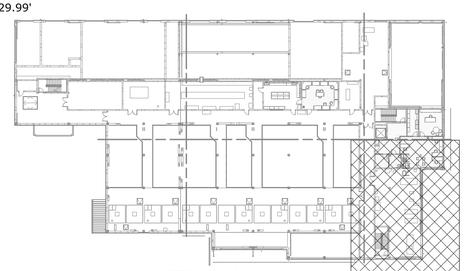

KEY PLAN

NTS

3/16" = 1'-0"

6 4 2 0 5'

NOTES:

1. THE WORK OF OTHER DISCIPLINES IS HALF-TONE OR HIDDEN FOR CLARITY. REFER TO CONTRACT DRAWINGS OF OTHER DISCIPLINES FOR ADDITIONAL WORK BY OTHERS.
2. COORDINATE ALL CEILING DIFFUSERS WITH REFLECTED CEILING PLAN ON THE ARCHITECTURAL DRAWINGS.

WARNING
IT IS A VIOLATION OF SECTION 7209.2 OF THE NEW YORK STATE EDUCATION LAW FOR ANY PERSON, UNLESS ACTING UNDER THE DIRECTION OF A LICENSED PROFESSIONAL ENGINEER, TO ALTER IN ANY WAY PLANS, SPECIFICATIONS, PLATS OR REPORTS TO WHICH THE SEAL OF A PROFESSIONAL ENGINEER HAS BEEN APPLIED. IF AN ITEM BEARING THE SEAL OF A PROFESSIONAL ENGINEER IS ALTERED, THE ALTERING ENGINEER SHALL AFFIX TO THE ITEM HIS SEAL AND THE NOTATION "ALTERED BY" FOLLOWED BY HIS SIGNATURE, THE DATE, AND A SPECIFIC DESCRIPTION OF THE ALTERATION.

REV	ISSUED FOR	DATE	BY

PROJECT ENGINEER:	R. FROST
DESIGNED BY:	M. GIORDANO
DRAWN BY:	R. CHIN
CHECKED BY:	R. VAN DYKE

IF THIS BAR DOES NOT MEASURE 1" THEN DRAWING IS NOT TO FULL SCALE 0 1/2" 1"

BID SET

MARC A. GIORDANO — STATE OF NEW YORK — 099858 — LICENSED PROFESSIONAL ENGINEER

Hazen

HAZEN AND SAWYER
498 SEVENTH AVENUE, 11th FLOOR
NEW YORK, NEW YORK 10018

WESTCHESTER JOINT WATER WORKS
MAMARONECK, NY

RYE LAKE WATER FILTRATION PLANT
HARRISON, NY

FILTRATION PLANT
HVAC
EL. 421.00 - AREA 6

DATE:	FEB 2025
HAZEN NO.:	90388-000
CONTRACT NO.:	A1364-A
DRAWING NUMBER:	H-111

Autodesk Docs://90388-000_Rye_Lake_Filtration/90388-000-WFP-H.rvt
2/18/2025 2:43:32 PM

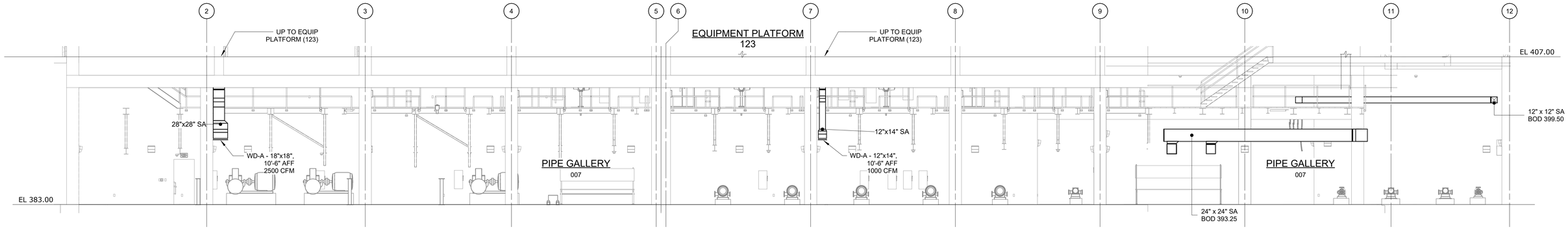

SECTION A
1/8" = 1'-0"
H-100

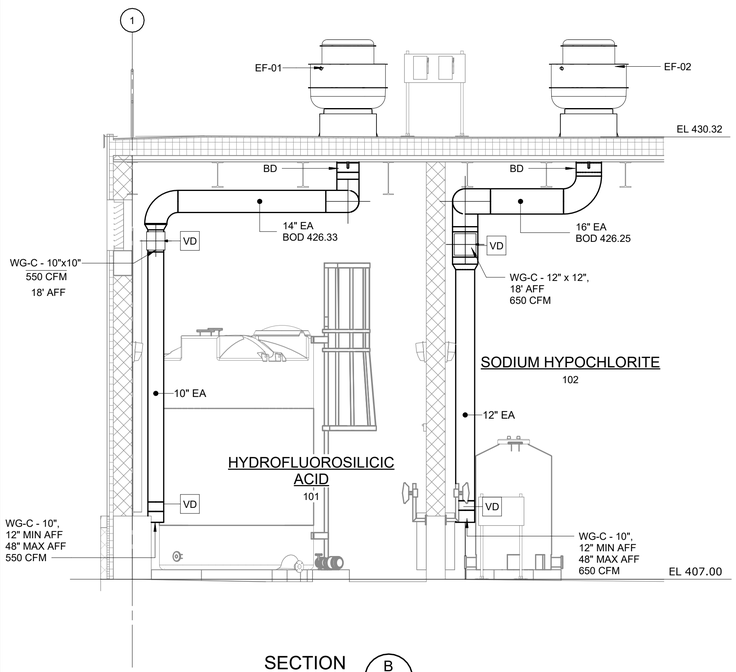

SECTION B
1/4" = 1'-0"
H-101

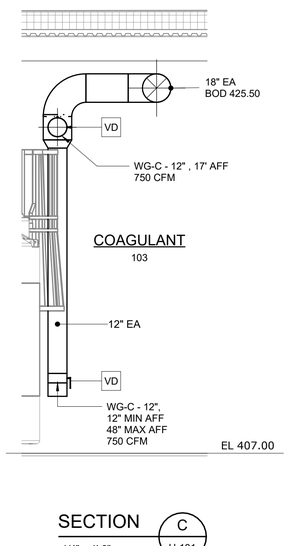

SECTION C
1/4" = 1'-0"
H-101

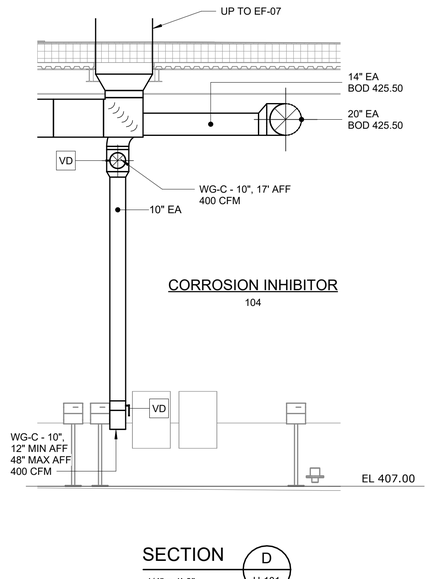

SECTION D
1/4" = 1'-0"
H-101

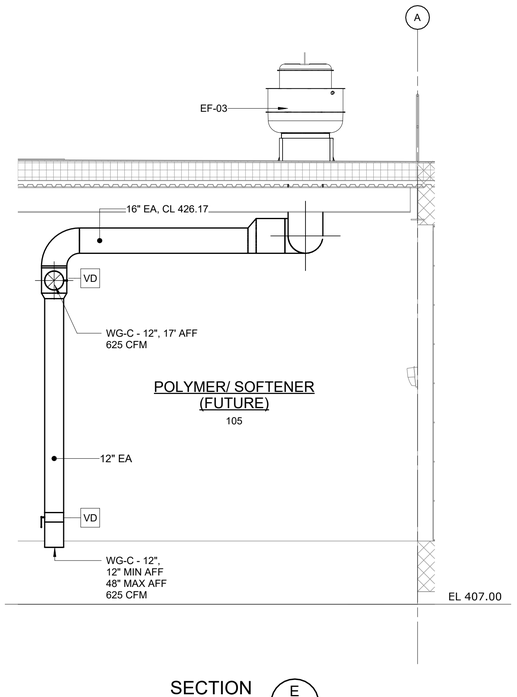

SECTION E
1/4" = 1'-0"
H-101

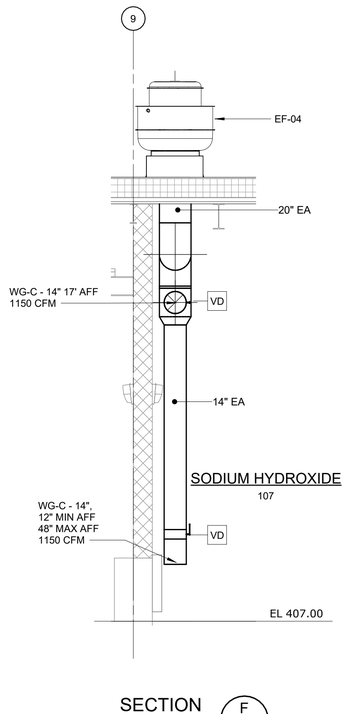

SECTION F
1/4" = 1'-0"
H-102

1/4" = 1'-0" 1 0 1 2 3 7'

1/8" = 1'-0" 8 6 4 2 0 8'

WARNING
IT IS A VIOLATION OF SECTION 7209.2 OF THE NEW YORK STATE EDUCATION LAW FOR ANY PERSON, UNLESS ACTING UNDER THE DIRECTION OF A LICENSED PROFESSIONAL ENGINEER, TO ALTER IN ANY WAY PLANS, SPECIFICATIONS, PLATS OR REPORTS TO WHICH THE SEAL OF A PROFESSIONAL ENGINEER HAS BEEN APPLIED. IF AN ITEM BEARING THE SEAL OF A PROFESSIONAL ENGINEER IS ALTERED, THE ALTERING ENGINEER SHALL AFFIX TO THE ITEM HIS SEAL AND THE NOTATION "ALTERED BY" FOLLOWED BY HIS SIGNATURE, THE DATE, AND A SPECIFIC DESCRIPTION OF THE ALTERATION.

REV	ISSUED FOR	DATE	BY

PROJECT ENGINEER:	R. FROST
DESIGNED BY:	M. GIORDANO
DRAWN BY:	R. CHIN
CHECKED BY:	R. VAN DYKE
IF THIS BAR DOES NOT MEASURE 1" THEN DRAWING IS NOT TO FULL SCALE	0 1/2" 1"

BID SET



Hazen
HAZEN AND SAWYER
498 SEVENTH AVENUE, 11th FLOOR
NEW YORK, NEW YORK 10018

WESTCHESTER JOINT WATER WORKS
MAMARONECK, NY

RYE LAKE WATER FILTRATION PLANT
HARRISON, NY

FILTRATION PLANT
HVAC
SECTIONS - SHEET 1

DATE:	FEB 2025
HAZEN NO.:	90388-000
CONTRACT NO.:	A1364-A
DRAWING NUMBER:	H-200

Autodesk Docs://90388-000_Rye_Lake_Filtration/90388-000-WFP-H.rvt
2/18/2025 2:43:38 PM

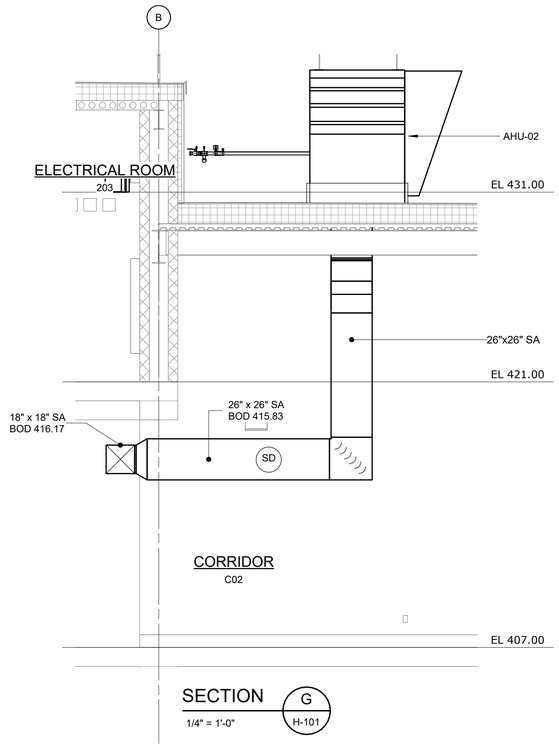

SECTION G
1/4" = 1'-0"
H-101

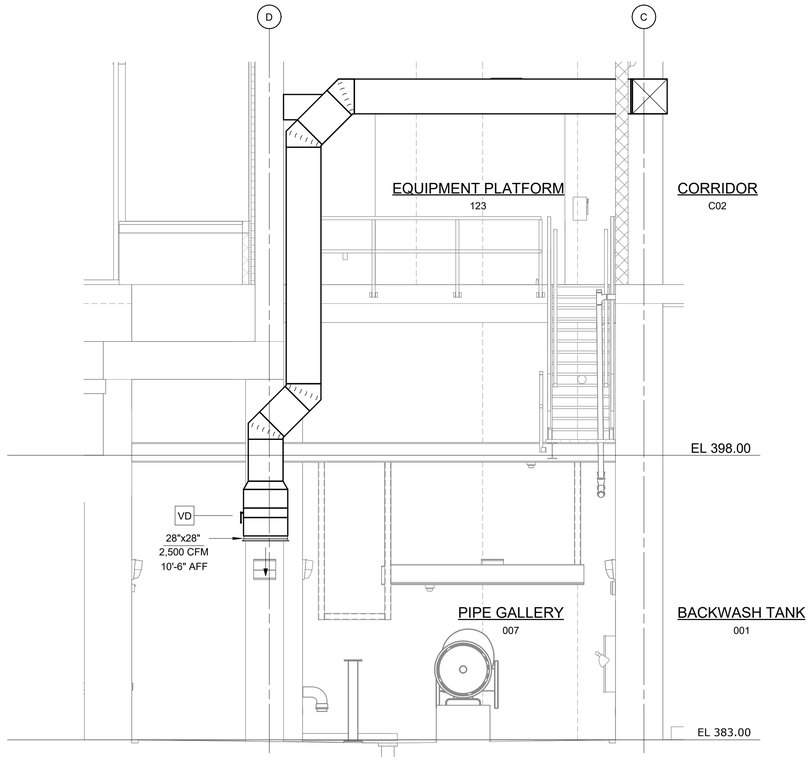

SECTION H
1/4" = 1'-0"
H-100

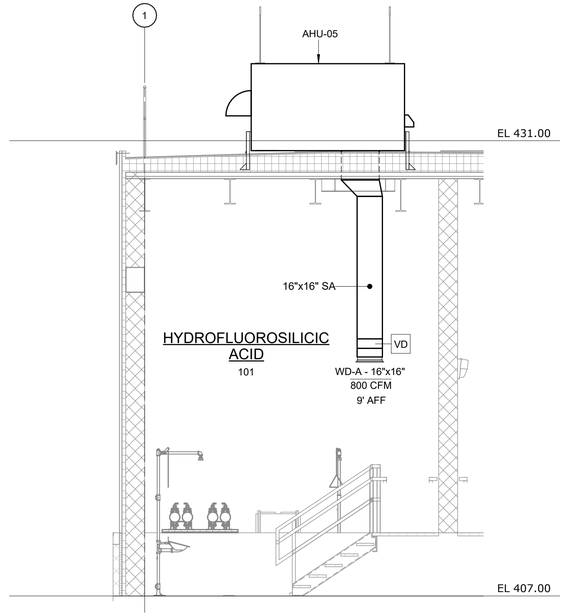

SECTION I
1/4" = 1'-0"
H-101

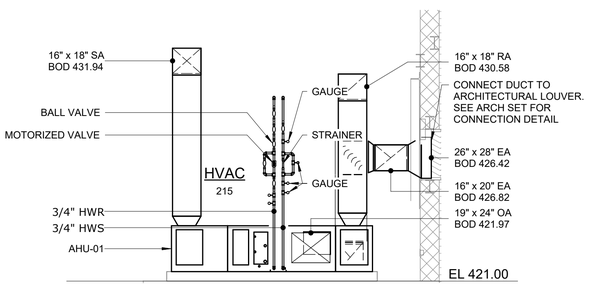

SECTION L
1/4" = 1'-0"
H-111

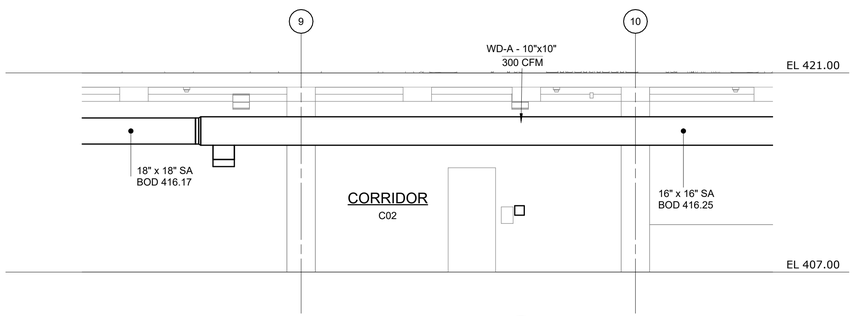

SECTION M
3/16" = 1'-0"
H-102

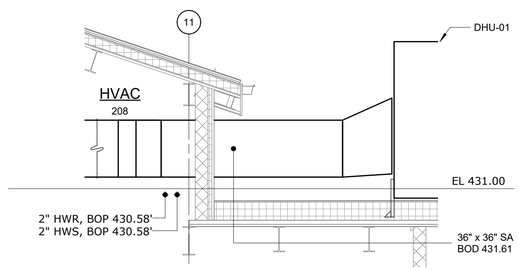

SECTION N
1/4" = 1'-0"
H-107

1/4" = 1'-0" 1 0 1 2 3 7'

3/16" = 1'-0" 6 4 2 0 5'

WARNING
IT IS A VIOLATION OF SECTION 7209.2 OF THE NEW YORK STATE EDUCATION LAW FOR ANY PERSON, UNLESS ACTING UNDER THE DIRECTION OF A LICENSED PROFESSIONAL ENGINEER, TO ALTER IN ANY WAY PLANS, SPECIFICATIONS, PLATS OR REPORTS TO WHICH THE SEAL OF A PROFESSIONAL ENGINEER HAS BEEN APPLIED. IF AN ITEM BEARING THE SEAL OF A PROFESSIONAL ENGINEER IS ALTERED, THE ALTERING ENGINEER SHALL AFFIX TO THE ITEM HIS SEAL AND THE NOTATION "ALTERED BY" FOLLOWED BY HIS SIGNATURE, THE DATE, AND A SPECIFIC DESCRIPTION OF THE ALTERATION.

REV	ISSUED FOR	DATE	BY

PROJECT ENGINEER:	R. FROST
DESIGNED BY:	M. GIORDANO
DRAWN BY:	R. CHIN
CHECKED BY:	R. VAN DYKE

IF THIS BAR DOES NOT MEASURE 1" THEN DRAWING IS NOT TO FULL SCALE 0 1/2" 1"

BID SET

Hazen
HAZEN AND SAWYER
498 SEVENTH AVENUE, 11th FLOOR
NEW YORK, NEW YORK 10018

WESTCHESTER JOINT WATER WORKS
MAMARONECK, NY

RYE LAKE WATER FILTRATION PLANT
HARRISON, NY

FILTRATION PLANT
HVAC
SECTIONS - SHEET 2

DATE:	FEB 2025
HAZEN NO.:	90388-000
CONTRACT NO.:	A1364-A
DRAWING NUMBER:	H-201

Autodesk Docs://90388-000_Rye_Lake_Filtration/90388-000-WFP-H.rvt
2/18/2025 2:43:43 PM

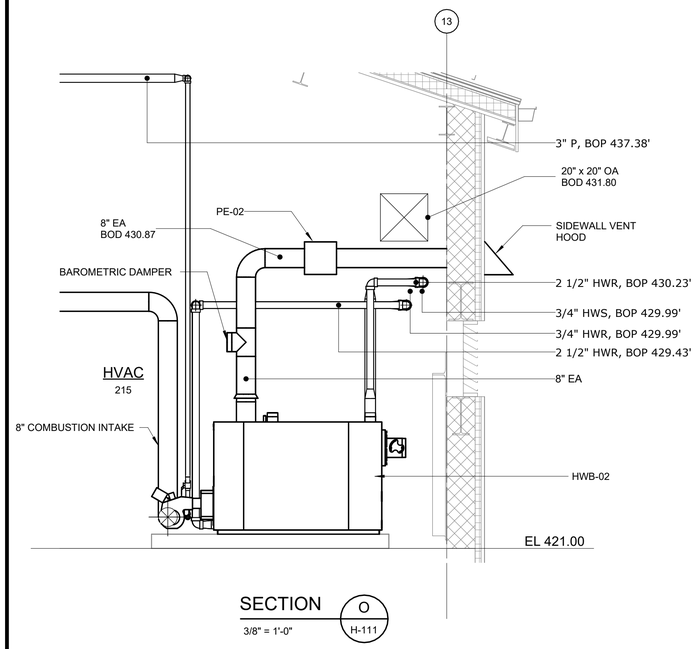

SECTION O
3/8" = 1'-0" H-111

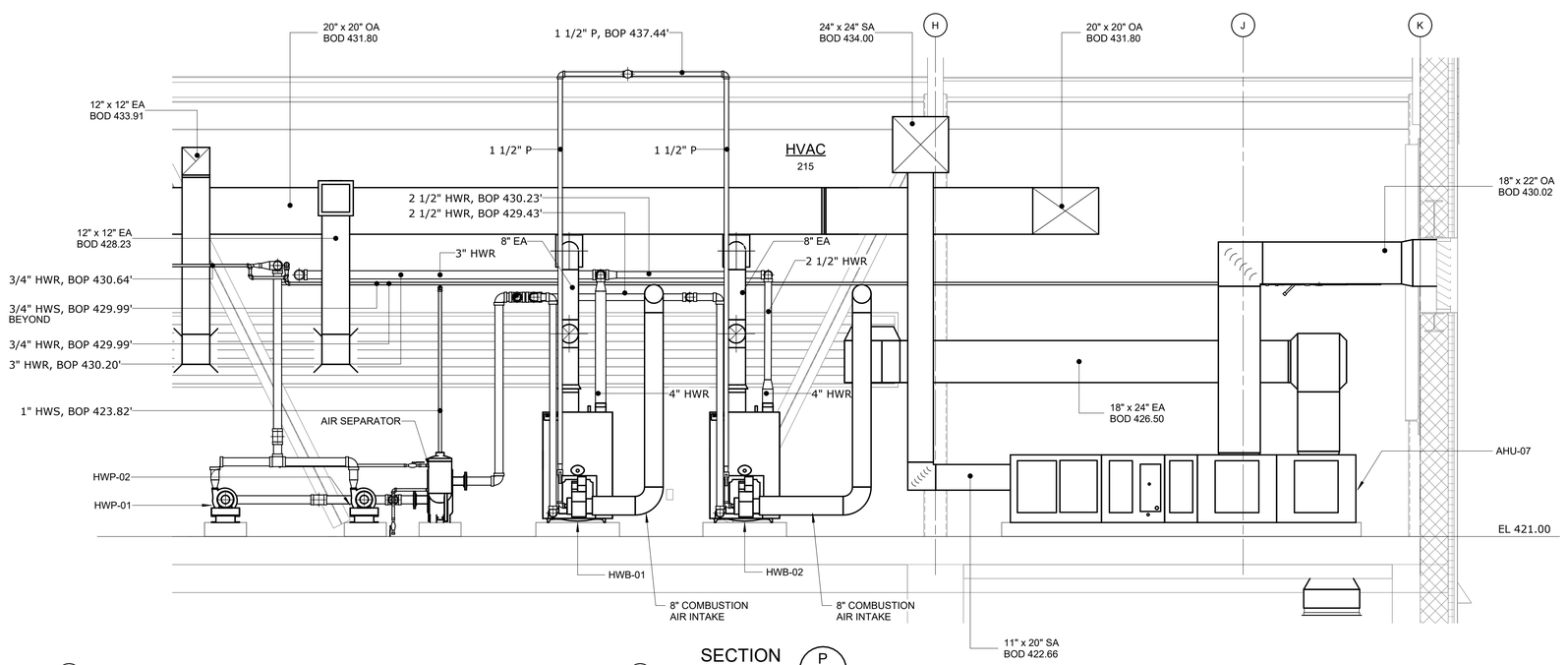

SECTION P
3/8" = 1'-0" H-104

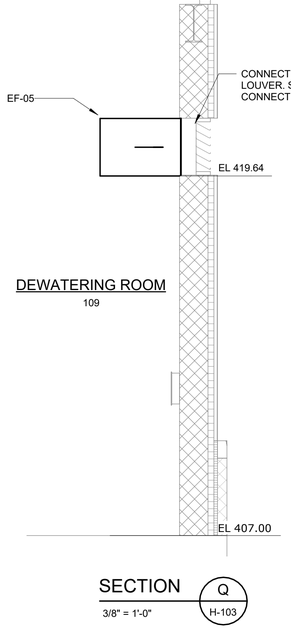

SECTION Q
3/8" = 1'-0" H-103

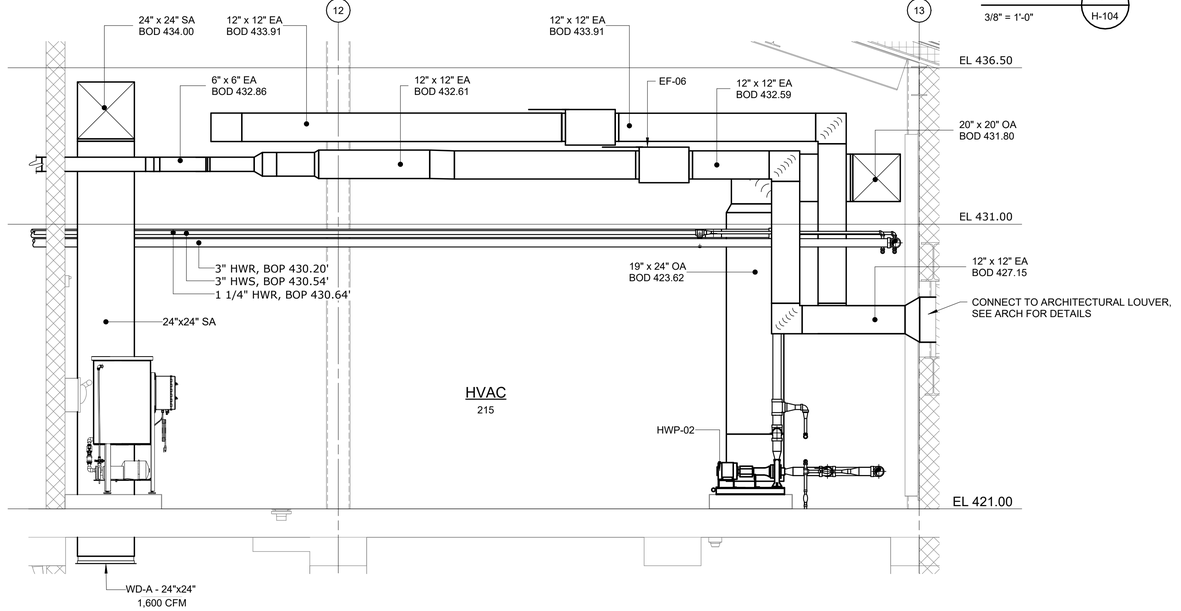

SECTION R
3/8" = 1'-0" H-111

WARNING
IT IS A VIOLATION OF SECTION 7209.2 OF THE NEW YORK STATE EDUCATION LAW FOR ANY PERSON, UNLESS ACTING UNDER THE DIRECTION OF A LICENSED PROFESSIONAL ENGINEER, TO ALTER IN ANY WAY PLANS, SPECIFICATIONS, PLATS OR REPORTS TO WHICH THE SEAL OF A PROFESSIONAL ENGINEER HAS BEEN APPLIED. IF AN ITEM BEARING THE SEAL OF A PROFESSIONAL ENGINEER IS ALTERED, THE ALTERING ENGINEER SHALL AFFIX TO THE ITEM HIS SEAL AND THE NOTATION "ALTERED BY" FOLLOWED BY HIS SIGNATURE, THE DATE, AND A SPECIFIC DESCRIPTION OF THE ALTERATION.

REV	ISSUED FOR	DATE	BY

PROJECT ENGINEER:	R. FROST
DESIGNED BY:	M. GIORDANO
DRAWN BY:	R. CHIN
CHECKED BY:	R. VAN DYKE

IF THIS BAR DOES NOT MEASURE 1" THEN DRAWING IS NOT TO FULL SCALE 0 1/2" 1"

BID SET

STATE OF NEW YORK · MARC A. GIORDANO · 099858 · LICENSED PROFESSIONAL ENGINEER

Hazen

HAZEN AND SAWYER
498 SEVENTH AVENUE, 11th FLOOR
NEW YORK, NEW YORK 10018

WESTCHESTER JOINT WATER WORKS
MAMARONECK, NY

RYE LAKE WATER FILTRATION PLANT
HARRISON, NY

FILTRATION PLANT
HVAC
SECTIONS - SHEET 3

DATE:	FEB 2025
HAZEN NO.:	90388-000
CONTRACT NO.:	A1364-A
DRAWING NUMBER:	H-202

Autodesk Docs://90388-000_Rye_Lake_Filtration/90388-000-WFP-H.rvt
2/18/2025 2:43:48 PM

INDOOR DESIGN TEMPERATURES

AREA NUMBER	AREA NAME	DESIGN DB TEMP (°F)	
		MINIMUM	MAXIMUM
001	BACKWASH TANK	UNCONDITIONED	
002	FILTERED WATER TRANSFER TANKS	UNCONDITIONED	
003	FLOATED SOLIDS BUFFER TANK	UNCONDITIONED	
004	UV DISINFECTION SYSTEM	50	104
005	RESIDUALS STORAGE TANKS	UNCONDITIONED	
006	STORAGE CLOSET	50	104
007	PIPE GALLERY	50	104
008	CORRIDOR	50	104
101	HYDROFLUOROSILICIC ACID	50	104
102	SODIUM HYPOCHLORITE (12.5%)	50	65
103	COAGULANT	50	104
104	CORROSION INHIBITOR	50	104
105	POLYMER/SOFTENER (FUTURE)	50	104
106	FILTERED WATER PUMPING AND DAF ROOM	50	104
107	SODIUM HYDROXIDE (25%)	50	104
108	CLOSET	50	104
109	DEWATERING ROOM	50	104
110	FIRE SPRINKLER RISER ROOM	50	104
111	CONFERENCE ROOM	68	72
112	LOBBY	68	72
113	VESTIBULE	65	80
114	MAINTENANCE CLOSET	50	104
115	WOMEN'S BATHROOM	68	72
116	WOMEN'S LOCKER ROOM	68	72
117	MEN'S BATHROOM	68	72
118	MEN'S LOCKER ROOM	68	72
119	ELECTRICAL	50	80
120	RAW WATER PIPING	50	104
121	STATIC MIXER AND OVERFLOW	UNCONDITIONED	
122	DAF TANKS	UNCONDITIONED	
123	EQUIPMENT PLATFORM	50	104
124	EXIT PASSAGEWAY	50	104
201	HVAC (NORTH)	50	104
202	AIR SCOUR	50	104
203	ELECTRICAL ROOM	50	80
204	STORAGE ROOM	50	104
205	PROCESS ANALYSIS ROOM	68	72
206	CONTROL ROOM	68	72
207	SCADA ROOM	68	72
208	HVAC (EAST)	50	104
209	COPY ROOM	68	72
210	CHIEF'S OFFICE	68	72
211	CORRIDOR	68	72
212	MAINTENANCE CLOSET	50	104
213	W.C.	68	72
214	OPEN OFFICE	68	72
215	HVAC (WEST)	50	104
216	STORAGE ROOM	50	104
217	HVAC PLENUM	UNCONDITIONED	
218	OPERATING LEVEL	50	104
SA	STAIR A	50	104
SB	STAIR B	50	104
SC	STAIR C	50	104
C01	CORRIDOR	50	104
C02	CORRIDOR	50	104
C03	CORRIDOR	68	72
C04	CORRIDOR	68	72

EXPANSION TANK SCHEDULE

TAG	LOCATION	MANUFACTURER	MODEL	MAXIMUM DESIGN TEMPERATURE (°F)	MAXIMUM DESIGN PRESSURE (PSIG)	TANK VOLUME (GALLONS)	TYPE	MAXIMUM OPERATING TEMPERATURE (°F)	SYSTEM FLUID	WEIGHT (EMPTY)	NOTES
ET-01	HVAC (215)	AMTROL	400-L	240	125	106	BLADDER	200	25% PROPYLENE GLYCOL	343	1,2

NOTES:
1. REFER TO SPECIFICATION 23 21 14 FOR ADDITIONAL REQUIREMENTS.
2. CONTRACTOR SHALL FIELD ADJUST THE EXPANSION TANK PRE-CHARGE TO 12 PSIG PRIOR TO INSTALLATION IN THE SYSTEM.

CLIMATIC DESIGN INFORMATION

SOURCE	2017 ASHRAE HANDBOOK
STATION	WESTCHESTER COUNTY AIRPORT, N.Y.
DESIGN HEATING	9.2°F DB (99.6%)
DESIGN COOLING	89.6°F DB / 73.4°F MCWB (0.4%)
DESIGN DEHUMIDIFICATION	73.4°F DP/ 79.4°F MCDB (0.4%)

PROPANE VAPORIZER SCHEDULE

TAG	LOCATION	MANUFACTURER	MODEL	CAPACITY		VAPORIZATION TYPE	INPUT (KW)	VOLTS/PHASE/HERTZ	NOTES
				BTU/HR	GPH				
PV-1	OUTDOORS	ALGAS	TORREXX - TX-50	2,200,000	25	INDIRECT DRY ELECTRIC	5.8	208/3/60	1,2

NOTES:
1. PROVIDE VALVE AND STRAINER PACKAGE INCLUDING STRAINER WITH MAGNETIC PLUG, INLET SHUTOFF VALVE, HYDROSTATIC RELIEF VALVE, OUTLET SHUTOFF BALL VALVE, AND OUTLET PRESSURE GAUGE.
2. TORREX STAND - 12"
3. ECONOMY VALVE
4. DRAIN VALVE KIT
5. LIQUID NET SOLENOID VALVE
6. REFER TO SPECIFICATION 23 10 01 FOR CONSTRUCTION AND ACCESSORY DETAILS

CHEMICAL FEED TANK SCHEDULE

TAG	LOCATION	MANUFACTURER		STORAGE TANK SIZE (GAL)	MATERIAL	WEIGHT (LBS)	NOTES
		MAKE	MODEL				
CF-01	HVAC ROOM (215)	WESSELS	CPFTA-5	5	CARBON STEEL	49	1

NOTES:
1. REFER TO SPECIFICATION 23 21 14 FOR CONSTRUCTION AND ACCESSORY DETAILS

DUCT CONSTRUCTION SCHEDULE

SYSTEM TYPE	AREA DESIGNATION SERVING	DUCTWORK LOCATION	DUCT MATERIAL	PRESSURE CLASS	SEAL CLASS	LEAKAGE CLASS
ALL	ALL	TYPE 1 CHEMICAL STORAGE/TRANSFER AREA	FRP	+ / - 2 INWG.	B	RECTANGULAR: 8 ROUND: 4
ALL	ALL (EXCEPT TYPE 1 OR 2 CHEMICAL STORAGE/TRANSFER AREA)	TYPE 2 CHEMICAL STORAGE/TRANSFER AREA	316SS	+ / - 2 INWG.	B	RECTANGULAR: 8 ROUND: 4
ALL	ALL (EXCEPT TYPE 1 OR 2 CHEMICAL STORAGE/TRANSFER AREA)	INDOOR WET PROCESS AREA	316SS	+ / - 2 INWG.	B	RECTANGULAR: 8 ROUND: 4
ALL	INDOOR DRY NON-PROCESS AREA	INDOOR DRY NON-PROCESS AREA	GALVANIZED STEEL	+ / - 2 INWG.	B	RECTANGULAR: 8 ROUND: 4
ALL	INDOOR WET PROCESS AREA	ALL (EXCEPT TYPE 1 OR 2 CHEMICAL STORAGE/TRANSFER AREA)	316SS	+ / - 2 INWG.	B	RECTANGULAR: 8 ROUND: 4
EXHAUST	TYPE 1 CHEMICAL STORAGE/TRANSFER AREA	ALL	FRP	+ / - 2 INWG.	B	RECTANGULAR: 8 ROUND: 4
SUPPLY	TYPE 1 CHEMICAL STORAGE/TRANSFER AREA	ALL (EXCEPT TYPE 1 OR 2 CHEMICAL STORAGE/TRANSFER AREA)	316SS	+ / - 2 INWG.	B	RECTANGULAR: 8 ROUND: 4
EXHAUST	TYPE 2 CHEMICAL STORAGE/TRANSFER AREA	ALL (EXCEPT TYPE 1 CHEMICAL STORAGE/TRANSFER AREA)	316SS	+ / - 2 INWG.	B	RECTANGULAR: 8 ROUND: 4
SUPPLY	TYPE 2 CHEMICAL STORAGE/TRANSFER AREA	ALL (EXCEPT TYPE 1 CHEMICAL STORAGE/TRANSFER AREA)	316SS	+ / - 2 INWG.	B	RECTANGULAR: 8 ROUND: 4

NOTES:
1. THIS SCHEDULE PROVIDES MINIMUM ACCEPTABLE MATERIAL, PRESSURE CLASS, SEAL CLASS, AND LEAKAGE CLASS REQUIREMENTS IF NO FURTHER GUIDANCE IS GIVEN IN THE DRAWINGS AND SPECIFICATIONS. ALTERNATE PROPERTIES MAY BE REQUIRED WHERE SPECIFICALLY IDENTIFIED IN THE DRAWINGS OR SPECIFICATIONS.
2. REFER TO DRAWING G-005 FOR AREA/ROOM DESIGNATION TABLE.
3. REFER TO SPECIFICATION 23 31 13 FOR ADDITIONAL REQUIREMENTS FOR METAL DUCTS AND DUCT ACCESSORIES.
4. REFER TO SPECIFICATION 23 31 16 FOR ADDITIONAL REQUIREMENTS FOR NON-METAL DUCTS AND DUCT ACCESSORIES.

AIR DEVICES - DIFFUSERS, REGISTERS, AND GRILLES SCHEDULE

TAG	MANUFACTURER		NECK SIZE (IN)	FACE SIZE		MAX. PRESSURE DROP ("WG)	TYPE	MATERIAL	MOUNTING TYPE	NOTES
	MAKE	MODEL		W (IN)	H (IN)					
CD-A	TITUS	TMS-AA	SEE TAG	12	12	0.1	SUPPLY DIFFUSER	ALUMINUM	LAYIN	1
CD-B	TITUS	TMS-AA	SEE TAG	12	24	0.1	SUPPLY DIFFUSER	ALUMINUM	LAYIN	1
CD-C	TITUS	TMS-AA	SEE TAG	24	24	0.1	SUPPLY DIFFUSER	ALUMINUM	LAYIN	1
WD-A	TITUS	300FL	SEE TAG	SEE TAG	SEE TAG	0.1	SUPPLY DIFFUSER	ALUMINUM	SIDEWALL	1
CG-A	TITUS	350FL	SEE TAG	12	12	0.1	RETURN GRILLE	ALUMINUM	LAYIN	1
CG-B	TITUS	350FL	SEE TAG	24	24	0.1	RETURN GRILLE	ALUMINUM	LAYIN	1
WG-A	TITUS	350FL	SEE TAG	SEE TAG	SEE TAG	0.1	RETURN GRILLE	ALUMINUM	SIDEWALL	1
WG-C	-	-	-	-	-	-	OPEN DUCT INTAKE	-	-	2,3

NOTES:
1. REFER TO SPECIFICATION 23 31 13 FOR CONSTRUCTION AND ACCESSORY DETAILS
2. REFER TO SPECIFICATION 23 31 16 FOR CONSTRUCTION AND ACCESSORY DETAILS
3. FOR CHEMICAL ROOM EXHAUST INTAKES, EXPOSED EDGES OF PLAIN END OF DUCT SHALL BE FIELD-CAPPED WITH CORROSION BARRIER. CORROSION BARRIER SHALL BE THE SAME CORROSION BARRIER LAMINATE SEQUENCE AND MATERIALS INDICATED FOR THE DUCT INNER CORROSION BARRIER. THE EXTERIOR PORTION OF THE CAPPING SHALL BE FINISHED AS INDICATED FOR THE EXTERIOR FINISH OF THE DUCT.

GLYCOL MAKEUP UNIT SCHEDULE

TAG	LOCATION	MANUFACTURER		STORAGE TANK SIZE (GAL)	MOTOR HP	FLUID	POWER			NOTES
		MAKE	MODEL				VOLT	PH	HZ	
GMU-01	HVAC ROOM (215)	BELL AND GOSSETT	GMU-60P	55	1/3	25% PROPYLENE GLYCOL	120	1	60	1

NOTES:
1. REFER TO SPECIFICATION 23 21 14 FOR CONSTRUCTION AND ACCESSORY DETAILS

WARNING
IT IS A VIOLATION OF SECTION 7209.2 OF THE NEW YORK STATE EDUCATION LAW FOR ANY PERSON, UNLESS ACTING UNDER THE DIRECTION OF A LICENSED PROFESSIONAL ENGINEER, TO ALTER IN ANY WAY PLANS, SPECIFICATIONS, PLATS OR REPORTS TO WHICH THE SEAL OF A PROFESSIONAL ENGINEER HAS BEEN APPLIED. IF AN ITEM BEARING THE SEAL OF A PROFESSIONAL ENGINEER IS ALTERED, THE ALTERING ENGINEER SHALL AFFIX TO THE ITEM HIS SEAL AND THE NOTATION "ALTERED BY" FOLLOWED BY HIS SIGNATURE, THE DATE, AND A SPECIFIC DESCRIPTION OF THE ALTERATION.

REV	ISSUED FOR	DATE	BY

PROJECT ENGINEER: R. FROST
DESIGNED BY: M. GIORDANO
DRAWN BY: R. CHIN
CHECKED BY: R. VAN DYKE
IF THIS BAR DOES NOT MEASURE 1" THEN DRAWING IS NOT TO FULL SCALE 0 1/2" 1"

BID SET

MARC A. GIORDANO — STATE OF NEW YORK — 099858 — PROFESSIONAL ENGINEER

Hazen
HAZEN AND SAWYER
498 SEVENTH AVENUE, 11th FLOOR
NEW YORK, NEW YORK 10018

WESTCHESTER JOINT WATER WORKS
MAMARONECK, NY

RYE LAKE WATER FILTRATION PLANT
HARRISON, NY

FILTRATION PLANT
HVAC
SCHEDULES - SHEET 1

DATE: FEB 2025
HAZEN NO.: 90388-000
CONTRACT NO.: A1364-A
DRAWING NUMBER: H-600

Autodesk Docs://90388-000_Rye_Lake_Filtration/90388-000-WFP-H.rvt
2/18/2025 2:43:51 PM

AIR HANDLING UNIT SCHEDULE

TAG	LOCATION	MANUFACTURER MAKE	MANUFACTURER MODEL	AREA SERVED	AIR FLOW (CFM)	MIN. OA (CFM)	SUPPLY FAN E.S.P. ("WG)	SUPPLY FAN MOTOR BHP	SUPPLY FAN MOTOR HP	SUPPLY FAN MOTOR VFD	RETURN FAN E.S.P. ("WG)	RETURN FAN MOTOR BHP	RETURN FAN MOTOR HP	RETURN FAN MOTOR VFD	HEATING COIL TYPE	HEATING COIL EAT (°F)	HEATING COIL LAT (°F)	HEATING COIL CAPACITY (MBH)	HEATING COIL WATER FLOW (GPM)	HEATING COIL EWT (F)	HEATING COIL LWT (F)	HEATING COIL MAX. FACE VEL. (FPM)	COOLING COIL EAT (°F) DB	COOLING COIL EAT (°F) WB	COOLING COIL LAT (°F) DB	COOLING COIL LAT (°F) WB	COOLING COIL MAX. FINS/INCH	COOLING COIL MAX. FACE VEL. (FPM)	COOLING COIL MAX. AIR P.D. ("WG)	COOLING COIL CAPACITY (TOTAL) (MBH)	SYSTEM EFF. RATING	SYSTEM EFF. UNIT	WEIGHT (LBS)	POWER VOLT	POWER PH	POWER HZ	POWER MCA	POWER MOCP	NOTES
AHU-01	HVAC (215)	TRANE	CSAA004	ADMIN & OCCUPIED AREAS	1,815	365	1	1.6	2	YES	1	0.6	1	YES	25% PG	57.9	95.5	70.6	7.3	200	180	575	77.9	65	53	52.2	8	510	0.79	64	14.8	IEER	1,650	460	3	60	6.35	15	1,2,5-8
AHU-02	ROOF	TRANE	HORIZON OAK144	CHEMICAL ROOMS	6,050	6,050	1	2.7	5	YES	-	-	-	-	25% PG	7.7	60	341.7	34.1	200	180	875	-	-	-	-	-	-	-	-	-	-	3,023	460	3	60	8.9	15	1-8
AHU-03	ROOF	TRANE	HORIZON OAB084	SODIUM HYPOCHLORITE (102)	1,200	1,200	1	0.4	1	YES	-	-	-	-	25% PG	7.7	60	67.8	6.8	200	180	400	90	75	54.5	53.6	14	200	0.2	82.9	14.8	IEER	1,395	460	3	60	40	60	1-8
AHU-04	ROOF	TRANE	CSAA025	DAF/FILTER BASIN AREA	10,000	2,500	1	4.8	5	YES	0.5	3.2	5	YES	25% PG	39.4	69.4	325	32.4	200	180	405	-	-	-	-	-	-	-	-	-	-	5,820	460	3	60	40.25	60	1,2,5-8
AHU-05	ROOF	TRANE	HORIZON OAB072	FLUORIDE (101)	800	800	1	0.2	1	YES	-	-	-	-	25% PG	7.7	60	45.2	4.5	200	180	261	-	-	-	-	-	-	-	-	-	-	1,177	460	3	60	3.5	15	1-8
AHU-06	HVAC (208)	TRANE	BCHE018	ADMIN & OCCUPIED AREAS	585	585	1	0.37	1	YES	-	-	-	-	25% PG	7.7	71	40	4.1	200	180	527	90	75	55.08	53.55	-	527	0.5	40.2	14	SEER	119	460	3	60	1.63	15	1,2,5-8
AHU-07	HVAC (215)	TRANE	CSAA004	ELECTRICAL ROOM (119)	1,600	0	2	1.37	2	YES	0.75	0.5	1	YES	-	-	-	-	-	-	-	-	80	67	59	57.6	10	354	0.5	48	14	SEER	1,658	460	3	60	6.35	15	1,2,5-8
AHU-08	ROOF	TRANE	PRECEDENT TSK 150A4S0	ELECTRICAL ROOM (203)	5,000	0	1	2.5	4.6	YES	-	-	-	-	-	-	-	-	-	-	-	-	80	67	57.4	56.6	-	-	-	150	14.6	IEER	1,398	460	3	60	33	45	1-8
AHU-09	HVAC (208)	TRANE	CSAA003	DEWATERING ROOM	1,250	1,250	2	1.2	1.5	YES	-	-	-	-	25% PG	7.7	72.4	87.7	9	200	180	500	-	-	-	-	-	-	-	-	-	-	693	460	3	60	2.63	15	1,2,5-8

NOTES:
1. REFER TO 23 74 00 FOR CONSTRUCTION AND ACCESSORY DETAILS
2. PROVIDE WIRED REMOTE THERMOSTAT
3. PROVIDE ROOF CURB
4. PROVIDE THROUGH THE BASE ELECTRICAL
5. PROVIDE WITH HINGED ACCESS PANELS
6. PROVIDE MERV 8 FILTERS
7. PROVIDE WITH FROSTAT
8. PROVIDE WITH STAINLESS STEEL DRAIN PAN

AIR CONDITIONING UNIT SCHEDULE

TAG	LOCATION	AREA SERVED	MANUFACTURER MAKE	MANUFACTURER MODEL	TYPE	AIR FLOW (CFM)	COOLING COIL EAT (F) DB	COOLING COIL CAPACITY NOMINAL (TONS)	COOLING COIL CAPACITY ACTUAL (MBH)	MIN. SYSTEM EER	MIN. CIRCUITS	WEIGHT (LBS)	SYSTEM EFF. RATING	SYSTEM EFF. UNIT	POWER	NOTES
AC-01	PROCESS ANALYSIS ROOM (205)	PROCESS ANALYSIS ROOM (205)	MITSUBISHI	PKA-A18HA7	WALL MOUNTED	370	72	1.5	18	14.4	1	46	18.5	SEER	AC POWERED FROM CONDENSING UNIT INTERCONNECTING WIRING	1-3
AC-02	CONTROL ROOM (206)	CONTROL ROOM (206)	MITSUBISHI	PKA-A18HA7	WALL MOUNTED	370	72	1.5	18	14.4	1	46	18.5	SEER	AC POWERED FROM CONDENSING UNIT INTERCONNECTING WIRING	1-3
AC-03	SCADA ROOM (207)	SCADA ROOM (207)	MITSUBISHI	PKA-A18HA7	WALL MOUNTED	370	72	1.5	18	14.4	1	46	18.5	SEER	AC POWERED FROM CONDENSING UNIT INTERCONNECTING WIRING	1-3

NOTES:
1. REFER TO SPECIFICATION 23 81 26 FOR CONSTRUCTION AND ACCESSORY DETAILS
2. PROVIDE WIRED REMOTE THERMOSTAT
3. ATC CONTRACTOR TO PROVIDE INTERCONNECTING WIRING

AIR COOLED CONDENSING UNIT SCHEDULE

TAG	LOCATION	AREA SERVED	MANUFACTURER MAKE	MANUFACTURER MODEL	NOMINAL COOLING CAPACITY (MBH)	NOMINAL HEATING CAPACITY (MBH)	REFRIGERANT	AMBIENT TEMP. MIN.	AMBIENT TEMP. MAX.	COMPRESSOR TYPE	ASSOCIATED UNIT	POWER VOLT	POWER PH	POWER HZ	POWER MCA	POWER MOCP	NOTES
ACCU-01	ROOF	PROCESS ANALYSIS ROOM (205)	MITSUBISHI	PUZ-A18NKA7	18	11.3	R410A	12	115	INVERTER-DRIVEN TWIN ROTARY	AC-01	208	1	60	11	28	1
ACCU-02	ROOF	CONTROL ROOM (206)	MITSUBISHI	PUZ-A18NKA7	18	11.3	R410A	12	115	INVERTER-DRIVEN TWIN ROTARY	AC-02	208	1	60	11	28	1
ACCU-03	ROOF	SCADA ROOM (207)	MITSUBISHI	PUZ-A18NKA7	18	11.3	R410A	12	115	INVERTER-DRIVEN TWIN ROTARY	AC-03	208	1	60	11	28	1
ACCU-04	ROOF	ELECTRICAL ROOM (119)	TRANE	5TTA4048A3000A	48	-	R454B	55	115	SCROLL	AHU-07	208	3	60	16	25	1
ACCU-05	ROOF	ADMIN SPACES	TRANE	TTA072K4AA	72	-	R454B	55	115	SCROLL	AHU-01	460	3	60	16	25	1
ACCU-06	ROOF	ADMIN SPACES	TRANE	5TTA4048A3000A	48	-	R454B	55	115	SCROLL	AHU-06	208	3	60	16	25	1
ACCU-07	ROOF	PIPE GALLERY, EQUIPMENT PLATFORM, DAF AND FILTER ROOM	BRY-AIR OR MUNTERS	BY MANUF.	10	-	R454B	40	115	SCROLL	DHU-01	460	3	60	22	25	1

NOTES:
1. REFER TO SPECIFICATION 23 81 26 FOR CONSTRUCTION AND ACCESSORY DETAILS

HOT WATER BOILER SCHEDULE

TAG	LOCATION	MANUFACTURER AND MODEL BOILER	MANUFACTURER AND MODEL BURNER	TYPE	RATED CAPACITY OUTPUT (BTU/HR)	NET INPUT (BTU/HR)	THERMAL EFFECIENCY %	FUEL	WATER TEMPERATURE OUT (°F)	WATER TEMPERATURE DROP (°F)	WATER FLOW RATE (GPM)	GAS INLET PRESSURE RANGE (IN. WC)	BURNER ELECTRICAL DATA MOTOR HP	BURNER ELECTRICAL DATA VOLT/PHASE/HZ	NOTES
HWB-01	HVAC ROOM (215)	WEIL MCCLAIN - 780	POWER FLAME - WCR1-G-12	CAST IRON	753	935	80	PROPANE	200	20	70	4.6 - 14	1/2	120/1/60	1-2
HWB-02	HVAC ROOM (215)	WEIL MCCLAIN - 780	POWER FLAME - WCR1-G-12	CAST IRON	753	935	80	PROPANE	200	20	70	4.6 - 14	1/2	120/1/60	1-2

NOTES:
1. REFER TO SPECIFICATION 23 52 23 FOR CONSTRUCTION AND ACCESSORY DETAILS
2. BOILERS TO OPERATE IN LEAD/LAG CONFIGURATION. EACH BOILER IS SIZED FOR 50% OF THE TOTAL DESIGN HEATING LOAD.

WARNING
IT IS A VIOLATION OF SECTION 7209.2 OF THE NEW YORK STATE EDUCATION LAW FOR ANY PERSON, UNLESS ACTING UNDER THE DIRECTION OF A LICENSED PROFESSIONAL ENGINEER, TO ALTER IN ANY WAY PLANS, SPECIFICATIONS, PLATS OR REPORTS TO WHICH THE SEAL OF A PROFESSIONAL ENGINEER HAS BEEN APPLIED. IF AN ITEM BEARING THE SEAL OF A PROFESSIONAL ENGINEER IS ALTERED, THE ALTERING ENGINEER SHALL AFFIX TO THE ITEM HIS SEAL AND THE NOTATION "ALTERED BY" FOLLOWED BY HIS SIGNATURE, THE DATE, AND A SPECIFIC DESCRIPTION OF THE ALTERATION.

REV	ISSUED FOR	DATE	BY

PROJECT ENGINEER: R. FROST
DESIGNED BY: M. GIORDANO
DRAWN BY: R. CHIN
CHECKED BY: R. VAN DYKE
IF THIS BAR DOES NOT MEASURE 1" THEN DRAWING IS NOT TO FULL SCALE 0 1/2" 1"

BID SET



Hazen
HAZEN AND SAWYER
498 SEVENTH AVENUE, 11th FLOOR
NEW YORK, NEW YORK 10018

WESTCHESTER JOINT WATER WORKS
MAMARONECK, NY

RYE LAKE WATER FILTRATION PLANT
HARRISON, NY

FILTRATION PLANT
HVAC
SCHEDULES - SHEET 2

DATE: FEB 2025
HAZEN NO.: 90388-000
CONTRACT NO.: A1364-A
DRAWING NUMBER: H-601

Autodesk Docs://90388-000_Rye_Lake_Filtration/90388-000-WFP-H.rvt
2/19/2025 2:43:53 PM

FAN SCHEDULE

TAG	LOCATION	AREA SERVED	MANUFACTURER	MODEL	AIRFLOW (CFM)	E.S.P. ("WG)	FAN		MOTOR		POWER			NOTES
							TYPE	DRIVE	BHP	HP	VOLT	PH	HZ	
EF-01	ROOF	FLUORIDE ROOM (101)	HARTZELL	A88-0-151FE100FGFCD3	900	0.65	CENTRIFUGAL UPBLAST	BELT	0.20	1/4	208	3	60	1-4
EF-02	ROOF	SODIUM HYPOCHLORITE (102)	HARTZELL	A88-0-181-FE-66FGFCD3	1,300	0.65	CENTRIFUGAL UPBLAST	BELT	0.23	1/4	208	3	60	1-4
EF-03	ROOF	CHEMICAL AREAS	HARTZELL	A88-0-301-FE100FGFCF3	3,650	0.5	CENTRIFUGAL UPBLAST	BELT	0.47	1/2	208	3	60	1-4
EF-04	ROOF	SODIUM HYDROXIDE (109)	HARTZELL	A88-0-181-FE100FGFCF3	2,300	0.5	CENTRIFUGAL UPBLAST	BELT	0.36	1/2	208	3	60	1-4
EF-05	DEWATERING ROOM (109)	DEWATERING ROOM (110)	GREENHECK	SE1-16-436-VG	1,200	0.5	SIDEWALL PROPELLER	DIRECT	0.33	3/4	115	1	60	1,3
EF-06	HVAC (215)	ADMIN AREAS	GREENHECK	SQ-99	585	0.75	INLINE CENTRIFUGAL	DIRECT	0.22	1/2	115	1	60	1,3
EF-07	ROOF	AIR SCOUR (202)	GREENHECK	CUBE-360-VG	8,500	0.5	CENTRIFUGAL UPBLAST	BELT	1.33	2	460	3	60	1-4
EF-08	HVAC (215)	ELEVATOR SHAFT	GREENHECK	SQ-97-VG	140	0.75	ALUMINUM INLINE	DIRECT	0.12	1/4	115	1	60	1,3
SF-01	ROOF	AIR SCOUR (202)	GREENHECK	KSQ-22-M2-VG	8,500	0.5	ROOF SUPPLY FAN	DIRECT	2.9	7.5	460	3	60	1,2,4

NOTES:
1. REFER TO SPECIFICATION 23 34 00 FOR CONSTRUCTION AND ACCESSORY DETAILS
2. PROVIDE WITH PREFABRICATED ROOF CURB
3. PROVIDE WITH GRAVITY BACKDRAFT DAMPER
4. PROVIDE WITH CONTINUOUS BIRD SCREEN

PUMP SCHEDULE

TAG	LOCATION	MANUFACTURER		TYPE	FLUID	FLOW RATE (GPM)	HEAD (FT)	SHUT OFF HEAD (FT)	MIN. NPSH REQ'D (FT)	MIN. EFF. (%)	MOTOR				POWER			NOTES
		MAKE	MODEL								BHP	HP	RPM	VFD	VOLT	PH	HZ	
HWP-01	HVAC ROOM (215)	BELL AND GOSSETT	E-1510 - 1.5BC	CENTRIFUGAL END SUCTION	25% PROPYLENE GLYCOL	126	80	92.8	7.74	60	4.71	5	1800	YES	460	3	60	1
HWP-02	HVAC ROOM (215)	BELL AND GOSSETT	E-1510 - 1.5BC	CENTRIFUGAL END SUCTION	25% PROPYLENE GLYCOL	126	80	92.8	7.74	60	4.71	5	1800	YES	460	3	60	1

NOTES:
1. REFER TO SPECIFICATION 23 21 23 FOR CONSTRUCTION AND ACCESSORY DETAILS

HOT WATER UNIT HEATER SCHEDULE

TAG	LOCATION	MANUFACTURER		TYPE	AIRFLOW (CFM)	CAPACITY (MBH)	WATER FLOW	EWT (°F)	LWT (°F)	WATER P.D.	POWER					NOTES
		MAKE	MODEL								VOLT	PH	HZ	MCA	MOCP	
UH-01	FIRE SPRINKLER RISER ROOM (111)	TRANE	UHSBA008	HORIZONTAL	245	8.03	0.8	200	180	0.8	115	1	60	1	1.8	1
UH-02	HVAC ROOM (201)	TRANE	UHSBA008	HORIZONTAL	245	8.03	0.8	200	180	0.8	115	1	60	1	1.8	1
UH-03	HVAC ROOM (208)	TRANE	UHSBA008	HORIZONTAL	245	8.03	0.8	200	180	0.8	115	1	60	1	1.8	1
UH-04	HVAC ROOM (215)	TRANE	UHSBA008	HORIZONTAL	245	8.03	0.8	200	180	0.8	115	1	60	1	1.8	1

NOTES:
1. REFER TO SPECIFICATION 23 82 39 FOR CONSTRUCTION AND ACCESSORY DETAILS

ELECTRIC UNIT HEATER SCHEDULE

TAG	LOCATION	MANUFACTURER		TYPE	CAPACITY (KW)	AIRFLOW (CFM)	DIMENSIONS			WEIGHT (LBS)	POWER			NOTES
		MAKE	MODEL				WIDTH (IN)	HEIGHT (IN)	DEPTH (IN)		VOLT	PH	HZ	
EUH-01	ELECTRICAL (119)	INDEECO	UHIR	VERTICAL	5	350	13	18	8	25	208	1	60	1
EUH-02	ELECTRICAL (119)	INDEECO	UHIR	VERTICAL	5	350	13	18	8	25	208	1	60	1
EUH-03	ELECTRICAL (203)	INDEECO	UHIR	VERTICAL	5	350	13	18	8	25	208	1	60	1
EUH-04	ELECTRICAL (203)	INDEECO	UHIR	VERTICAL	5	350	13	18	8	25	208	1	60	1

NOTES:
1. REFER TO SPECIFICATION 23 82 39 FOR CONSTRUCTION AND ACCESSORY DETAILS

POWER EXHAUSTER SCHEDULE

TAG	LOCATION	MANUFACTURER	MODEL	FAN		MOTOR		POWER			NOTES
				TYPE	DRIVE	BHP	HP	VOLT	PH	HZ	
PE-01	HVAC (215)	FIELD CONTROLS	PVE-1200	INLINE CENTRIFUGAL	BELT	0.1	1/4	115	1	60	1-4
PE-02	HVAC (215)	FIELD CONTROLS	PVE-1200	INLINE CENTRIFUGAL	BELT	0.1	1/4	115	1	60	1-4

NOTES:
1. PROVIDE WITH 4" MG-1 DRAFT CONTROL DAMPER
2. PROVIDE WITH 4" VENT HOOD
3. PROVIDE WITH SPILL SWITCH
4. PROVIDE WITH CK KIT

FIRE DAMPERS SCHEDULE

TAG	AREA SERVED	UNIT SERVED	MANUFACTURER	MODEL	TYPE	MATERIAL	RATING (HRS)	AIRFLOW (CFM)	DIMENSIONS (IN)	NOTES
FD-1	PIPE GALLERY (007)	DHU-01	RUSKIN	DFD35SS	MULTI-BLADE	316 SS	1.5	3500	36"x36"	1,2
FD-2	PIPE GALLERY (007)	DHU-01	RUSKIN	DFD35SS	MULTI-BLADE	316 SS	1.5	5300	36"x36"	1,2
FD-3	NOT USED	-	-	-	-	-	-	-	-	-
FD-4	POLYMER/SOFTENER (105)	AHU-02	RUSKIN	DFD60-3	MULTI-BLADE	316 SS	1.5	3350	20"x20"	1,2
FD-5	SODIUM HYDROXIDE (107)	AHU-02	RUSKIN	DFD60-3	MULTI-BLADE	316 SS	1.5	2200	16"x16"	1,2
FD-6	CORRIDOR (C02)	DHU-01	RUSKIN	DFD35SS	MULTI-BLADE	316 SS	1.5	6700	24"x24"	1,2
FD-7	CORRIDOR (C02)	DHU-01	RUSKIN	DFD35SS	MULTI-BLADE	316 SS	1.5	3800	24"x20"	1,2
FD-8	CORRIDOR (C01)	AHU-06	RUSKIN	DFD35SS	MULTI-BLADE	316 SS	1.5	70	8"x6"	1,2
FD-9	CORRIDOR (C01)	EF-06	RUSKIN	DFD35SS	MULTI-BLADE	316 SS	1.5	70	8"x6"	1,2
FD-10	ELEVATOR SHAFT	EF-08	RUSKIN	DFD35SS	MULTI-BLADE	316 SS	1.5	150	10"x10"	1,2
FD-11	HVAC (201)	AHU-04	RUSKIN	DFD35SS	MULTI-BLADE	316 SS	1.5	10000	38"x24"	1,2
FD-12	ELEVATOR SHAFT	EF-08	RUSKIN	DFD35SS	MULTI-BLADE	316 SS	1.5	150	10"x10"	1,2
FD-13	AIR SCOUR (202)	EF-07	RUSKIN	DFD35SS	MULTI-BLADE	316 SS	1.5	8500	42"x34"	1,2
FD-14	AIR SCOUR (202)	SF-01	RUSKIN	DFD35SS	MULTI-BLADE	316 SS	1.5	8500	42"x34"	1,2
FD-15	ELECTRICAL ROOM (203)	AHU-08	RUSKIN	DFD35SS	MULTI-BLADE	316 SS	1.5	5000	36"x24"	1,2
FD-16	ELECTRICAL ROOM (203)	AHU-08	RUSKIN	DFD35SS	MULTI-BLADE	316 SS	1.5	5000	36"x24"	1,2
FD-17	HVAC (208)	DHU-01	RUSKIN	DFD60-3	MULTI-BLADE	316 SS	1.5	10000	36"x36"	1,2
FD-18	HVAC (208)	DHU-01	RUSKIN	DFD60-3	MULTI-BLADE	316 SS	1.5	9100	36"x36"	1,2
FD-19	CORRIDOR (C04)	AHU-06	RUSKIN	DFD35SS	MULTI-BLADE	316 SS	1.5	370	8"x8"	1,2
FD-20	ELECTRICAL ROOM (119)	AHU-07	RUSKIN	DFD35SS	MULTI-BLADE	316 SS	1.5	1600	24"x24"	1,2
FD-21	ELECTRICAL ROOM (119)	AHU-07	RUSKIN	DFD35SS	MULTI-BLADE	316 SS	1.5	1600	24"x24"	1,2
FD-22	HVAC (215)	AHU-01	RUSKIN	DFD35SS	MULTI-BLADE	316 SS	1.5	1040	14"x12"	1,2
FD-23	HVAC (215)	AHU-01	RUSKIN	DFD35SS	MULTI-BLADE	316 SS	1.5	875	14"x12"	1,2
FD-24	HVAC (215)	EF-06	RUSKIN	DFD35SS	MULTI-BLADE	316 SS	1.5	100	10"x10"	1,2
FD-25	CORRIDOR (C04)	EF-06	RUSKIN	DFD35SS	MULTI-BLADE	316 SS	1.5	70	6"x6"	1,2

NOTES:
1. REFER TO SPECIFICATION 15810 FOR CONSTRUCTION AND ACCESSORY DETAILS
2. INSTALL ACCORDING TO MANUFACTURER REQUIREMENTS

WARNING
IT IS A VIOLATION OF SECTION 7209.2 OF THE NEW YORK STATE EDUCATION LAW FOR ANY PERSON, UNLESS ACTING UNDER THE DIRECTION OF A LICENSED PROFESSIONAL ENGINEER, TO ALTER IN ANY WAY PLANS, SPECIFICATIONS, PLATS OR REPORTS TO WHICH THE SEAL OF A PROFESSIONAL ENGINEER HAS BEEN APPLIED. IF AN ITEM BEARING THE SEAL OF A PROFESSIONAL ENGINEER IS ALTERED, THE ALTERING ENGINEER SHALL AFFIX TO THE ITEM HIS SEAL AND THE NOTATION "ALTERED BY" FOLLOWED BY HIS SIGNATURE, THE DATE, AND A SPECIFIC DESCRIPTION OF THE ALTERATION.

REV	ISSUED FOR	DATE	BY

PROJECT ENGINEER: R. FROST
DESIGNED BY: M. GIORDANO
DRAWN BY: R. CHIN
CHECKED BY: R. VAN DYKE
IF THIS BAR DOES NOT MEASURE 1" THEN DRAWING IS NOT TO FULL SCALE 0 1/2" 1"

BID SET



Hazen
HAZEN AND SAWYER
498 SEVENTH AVENUE, 11th FLOOR
NEW YORK, NEW YORK 10018

WESTCHESTER JOINT WATER WORKS
MAMARONECK, NY

RYE LAKE WATER FILTRATION PLANT
HARRISON, NY

FILTRATION PLANT
HVAC
SCHEDULES - SHEET 3

DATE: FEB 2025
HAZEN NO.: 90388-000
CONTRACT NO.: A1364-A
DRAWING NUMBER: H-602

Autodesk Docs://90388-000_Rye_Lake_Filtration/90388-000-WFP-H.rvt
2/18/2025 2:43:55 PM

DEHUMIDIFICATION UNIT SCHEDULE - PART 1

TAG	LOCATION	MANUFACTURER		AREA SERVED	OUTSIDE AIR (CFM)	SUPPLY FAN				SUMMER CONDITIONS: DRYING WITH DX PRE-COOL COIL ONLY					SUMMER CONDITIONS: DRYING WITH DESICCANT ONLY					SPRING CONDITIONS: DRYING WITH DESICCANT ONLY					WINTER CONDITIONS: HEATING ONLY					POWER						WEIGHT (LBS)	NOTES
		MANUFACTURER	MODEL			AIR FLOW (CFM)	ESP (IN.WG)	BHP	MOTOR HP	OUTSIDE AIR DP TEMP (°F)	OUTSIDE AIR DB TEMP (°F)	SUPPLY AIR DP TEMP (°F)	SUPPLY AIR DB TEMP (°F)	SPACE TARGET DP TEMP2 (°F)	OUTSIDE AIR DP TEMP (°F)	OUTSIDE AIR DB TEMP (°F)	SUPPLY AIR DP TEMP (°F)	SUPPLY AIR DB TEMP (°F)	SPACE TARGET DP TEMP2 (°F)	OUTSIDE AIR DP TEMP (°F)	OUTSIDE AIR DB TEMP (°F)	SUPPLY AIR DP TEMP (°F)	SUPPLY AIR DB TEMP (°F)	SPACE TARGET DP TEMP2 (°F)	OUTSIDE AIR DP TEMP (°F)	OUTSIDE AIR DB TEMP (°F)	SUPPLY AIR DP TEMP (°F)	SUPPLY AIR DB TEMP (°F)	SPACE TARGET DP TEMP (°F)	VOLT	PH	HZ	FLA	MCA	MOCP		
DHU-01	ROOF	BRYAIR OR MUNTERS	VFB SERIES OR ICA SERIES	PIPE GALLERY & FILTERED WATER PUMPING AND DAF ROOM	900	10,000	1.7	10.3	15	73.5	79.4	55	< 95	56	73.5	79.4	52.6	< 95	53.6	45.0	50	35.4	< 95	36.4	-	9	-	65	50	460	3	60	138	146	150	8,500	1-4

DEHUMIDIFICATION UNIT SCHEDULE - PART 2

TAG	OUTDOOR AIR PRE-COOLING DX COIL1							POST-HEATING COIL							DESICCANT REACTIVATION SYSTEM						WHEEL: SUMMER DESICCANT-ONLY PERFORMANCE							WHEEL: SPRING DESICCANT-ONLY PERFORMANCE						
	AIR FLOW (CFM)	ENTERING AIR		LEAVING AIR		TOTAL COOLING LOAD (MBH)	SENSIBLE COOLING LOAD (MBH)	AIR FLOW (CFM)	ENTERING AIR DB TEMP (°F)	LEAVING AIR DB TEMP (°F)	HEATING LOAD (MBH)	FLUID	ENTERING FLUID TEMP (°F)	FLUID FLOW (GPM)	FAN			ENTERING AIR DB TEMP (°F)	LEAVING AIR DB TEMP3 (°F)	ELECTRIC HEAT3 (KW)	AIR FLOW THROUGH WHEEL4 (CFM)	AIR FLOW BYPASSING WHEEL4 (CFM)	ENTERING AIR		SUPPLY AIR DP TEMP4 (°F)	SUPPLY AIR DB TEMP4,5 (°F)	MOISTURE REMOVAL (GR/HR)	AIR FLOW THROUGH WHEEL (CFM)	AIR FLOW BYPASSING WHEEL (CFM)	ENTERING AIR		SUPPLY AIR DP TEMP (°F)	SUPPLY AIR DB TEMP (°F)	MOISTURE REMOVAL (GR/HR)
		DP TEMP (°F)	DB TEMP (°F)	DP TEMP (°F)	DB TEMP (°F)										AIR FLOW3 (CFM)	ESP (INWG)	MOTOR SIZE (HP)						DP TEMP5 (°F)	DB TEMP5 (°F)							DP TEMP (°F)	DB TEMP (°F)			
DHU-01	900	74	79	45	45	84.6	33.5	10,000	46.3	65	202	25% PG	200	30	1,000	0.25	3	80	285	65	1,500	8,500	55.4	APPROX 85	53.6	APPROX 90	189,000	3,000	7000	37.2	APPROX 85	35.4	APPROX 90	117,000

NOTES:
1. CONTROLLER SHALL MAXIMIZE DEHUMIDIFICATION FROM THE OUTDOOR AIR STREAM WITH THE DX PRE-COOLING COIL, THEN SUPPLEMENT OR UTILIZE DESICCANT DHUMIDIFICATION WHEN DX-ONLY PRE-COOLING CANNOT MEET THE SUPPLY AIR DEWPOINT TARGET.
2. SPECIFIED SUPPLY AIR AND SPACE DEWPOINT TARGETS ARE SELECTED TO MITIGATE CONDENSATION ON PIPES DUE TO COLD WATER WITHIN PIPING. UNIT SHALL CONTROL DISCHARGE AIR DEWPOINT BASED A TEMPERATURE TRANSMITTER INSTALLED ON PROCESS PIPE.
3. AIRFLOW RATE AND DISCHARGE TEMPERATURE FOR DESICCANT REACTIVATION SHALL BE DETERMINED BY MANUFACTURER TO MAXIMIZE EFFICIENCY. VALUES SHOWN IN SCHEDULE ARE UTILIZED FOR ELECTRICAL DESIGN PURPOSES.
4. AIRFLOW RATES FOR DESICCANT WHEEL BYPASS SHALL BE DETERMINED BY MANUFACTURER TO PROVIDE TARGET SUPPLY AIR DEWPOINT TEMPERATURE AT SPECIFIED CONDITIONS. UNIT DISCHARGE AIR TEMPERATURE RESULTING FROM WHEEL/BYPASS AIRFLOWS SHWALL NOT EXCEED 95 DEG-F.
5. DESICCANT WHEEL ENTERING AIR CONDITIONS ARE BASED ON MIXING OF RETURN AIR AT THE SPECIFIED SPACE CONDITIONS AND OUTDOOR AIR AT THE SPECIFIED OUTDOOR AIR CONDITIONS. DEWPOINT TEMPERATURES ARE PRE-DETERMINED HOWEVER RETURN AIR DRY BULB TEMPERATURES WILL DEPEND ON HEAT IMPARTED BY DESICCANT WHEEL AS WELL AS COOLING IN SPACE BY TANK WALLS.
6. POST-HEATING ENTERING TEMPERATURE IS BASED ON MIXING OF RETURN AIR AT MINIMUM ALLOWABLE SPACE TEMPERATURE (50 °F) AND OUTDOOR AIR.
7. FOR BIDDING PURPOSES, IT IS ASSUMED THAT A 10-TON CONDENSING UNIT FOR THE PRE-COOLING COIL WILL BE FURNISHED SEPARATELY FROM THE DHU ENCLOSURE AND WILL REQUIRE ITS OWN 25-AMP POWER FEEDER. INCORPORATION OF THE CONDENSER INTO THE DHU ENCLOSURE AND USE OF SINGLE-POINT POWER IS ACCEPTABLE.

PENTHOUSE LOUVERS SCHEDULE

TAG	LOCATION	MANUFACTURER		TYPE	MATERIAL	AIRFLOW (CFM)	SIZE			FREE AREA (SQFT)	MAX FACE VEL. (FPM)	STATIC P.D. ("WG)	NOTES
		MAKE	MODEL				WIDTH (IN)	HEIGHT (IN)	HEIGHT (IN)				
PH-01	HVAC PLENUM (217)	RUSKIN	PHB - ELF375DXH	INTAKE	ALUMINUM	1,835	28	28	28	9.8	200	0.01	1

NOTES:
1. REFER TO SPECIFICATION 23 31 13 FOR CONSTRUCTION AND ACCESSORY DETAILS

WARNING
IT IS A VIOLATION OF SECTION 7209.2 OF THE NEW YORK STATE EDUCATION LAW FOR ANY PERSON, UNLESS ACTING UNDER THE DIRECTION OF A LICENSED PROFESSIONAL ENGINEER, TO ALTER IN ANY WAY PLANS, SPECIFICATIONS, PLATS OR REPORTS TO WHICH THE SEAL OF A PROFESSIONAL ENGINEER HAS BEEN APPLIED. IF AN ITEM BEARING THE SEAL OF A PROFESSIONAL ENGINEER IS ALTERED, THE ALTERING ENGINEER SHALL AFFIX TO THE ITEM HIS SEAL AND THE NOTATION "ALTERED BY" FOLLOWED BY HIS SIGNATURE, THE DATE, AND A SPECIFIC DESCRIPTION OF THE ALTERATION.

REV	ISSUED FOR	DATE	BY

PROJECT ENGINEER: R. FROST
DESIGNED BY: M. GIORDANO
DRAWN BY: R. CHIN
CHECKED BY: R. VAN DYKE
IF THIS BAR DOES NOT MEASURE 1" THEN DRAWING IS NOT TO FULL SCALE 0 1/2" 1"

BID SET

MARC A. GIORDANO — STATE OF NEW YORK — 099858 — LICENSED PROFESSIONAL ENGINEER

Hazen
HAZEN AND SAWYER
498 SEVENTH AVENUE, 11th FLOOR
NEW YORK, NEW YORK 10018

WESTCHESTER JOINT WATER WORKS
MAMARONECK, NY

RYE LAKE WATER FILTRATION PLANT
HARRISON, NY

FILTRATION PLANT
HVAC
SCHEDULES - SHEET 4

DATE: FEB 2025
HAZEN NO.: 90388-000
CONTRACT NO.: A1364-A
DRAWING NUMBER: H-603

Autodesk Docs://90388-000_Rye_Lake_Filtration/90388-000-WFP-H.rvt
2/18/2025 2:43:56 PM

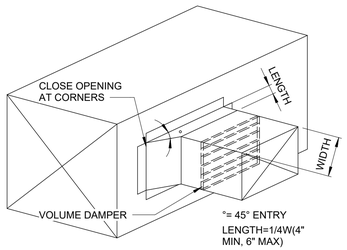

450EG DUCT
BRANCH
CONNECTION

H-23-0102

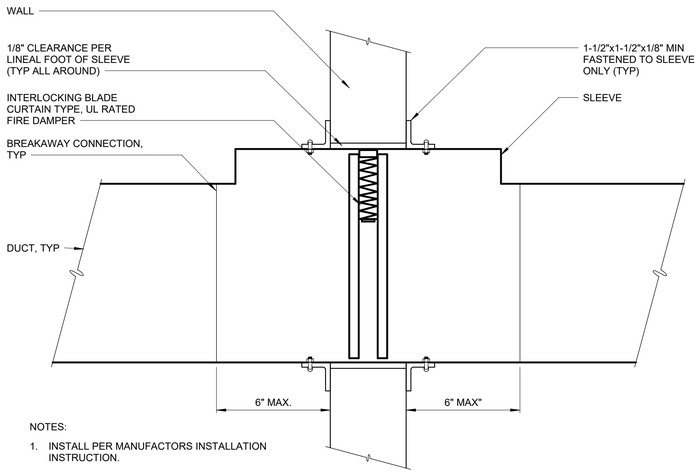

NOTES:

1. INSTALL PER MANUFACTORS INSTALLATION INSTRUCTION.

FIRE DAMPER
INSTALLATION

H-23-0201

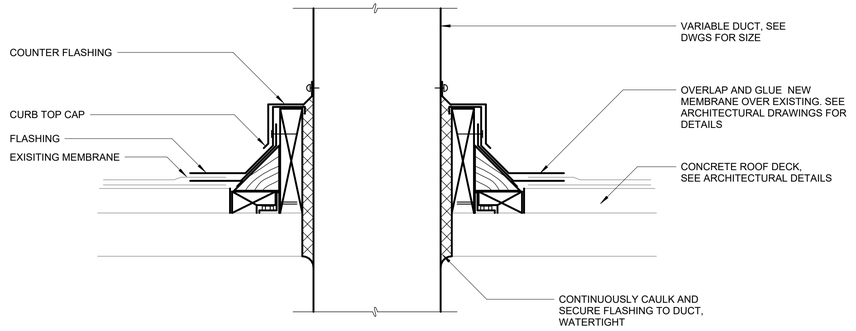

DUCT
PENETRATION
ROOF

H-23-0203

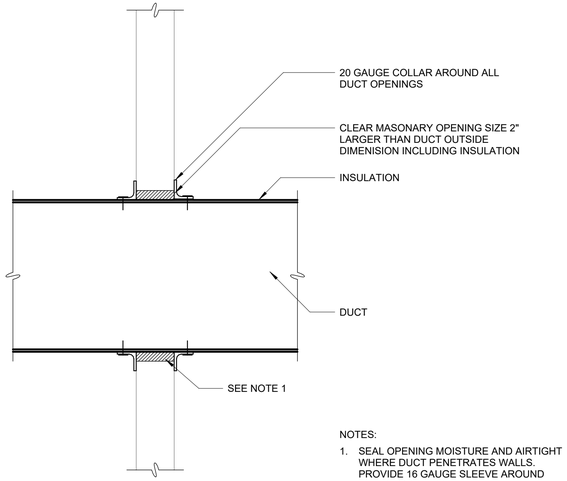

NOTES:

1. SEAL OPENING MOISTURE AND AIRTIGHT WHERE DUCT PENETRATES WALLS. PROVIDE 16 GAUGE SLEEVE AROUND ENTIRE OPENING.

DUCT
PENETRATION
WALL

H-23-0204

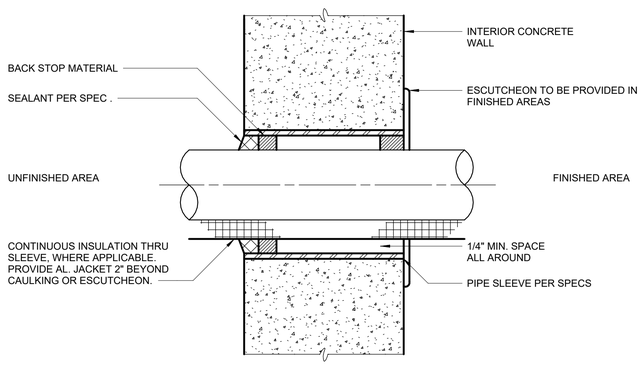

PIPE SLEEVE WALL PENETRATION

P-22-0217

WARNING
IT IS A VIOLATION OF SECTION 7209.2 OF THE NEW YORK STATE EDUCATION LAW FOR ANY PERSON, UNLESS ACTING UNDER THE DIRECTION OF A LICENSED PROFESSIONAL ENGINEER, TO ALTER IN ANY WAY PLANS, SPECIFICATIONS, PLATS OR REPORTS TO WHICH THE SEAL OF A PROFESSIONAL ENGINEER HAS BEEN APPLIED. IF AN ITEM BEARING THE SEAL OF A PROFESSIONAL ENGINEER IS ALTERED, THE ALTERING ENGINEER SHALL AFFIX TO THE ITEM HIS SEAL AND THE NOTATION "ALTERED BY" FOLLOWED BY HIS SIGNATURE, THE DATE, AND A SPECIFIC DESCRIPTION OF THE ALTERATION.

REV	ISSUED FOR	DATE	BY

PROJECT ENGINEER:	R. FROST
DESIGNED BY:	M. GIORDANO
DRAWN BY:	R. CHIN
CHECKED BY:	R. VAN DYKE

IF THIS BAR DOES NOT MEASURE 1" THEN DRAWING IS NOT TO FULL SCALE — 0 1/2" 1"

BID SET

Hazen
HAZEN AND SAWYER
498 SEVENTH AVENUE, 11th FLOOR
NEW YORK, NEW YORK 10018

WESTCHESTER JOINT WATER WORKS
MAMARONECK, NY

RYE LAKE WATER FILTRATION PLANT
HARRISON, NY

FILTRATION PLANT
HVAC
DETAILS - SHEET 1

DATE:	FEB 2025
HAZEN NO.:	90388-000
CONTRACT NO.:	A1364-A
DRAWING NUMBER:	H-604

Autodesk Docs://90388-000_Rye_Lake_Filtration/90388-000-WFP-H.rvt
2/18/2025 2:43:57 PM

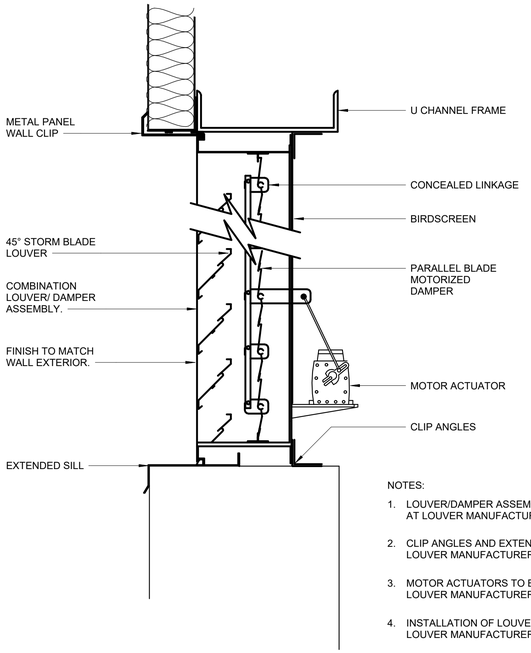

NOTES:

1. LOUVER/DAMPER ASSEMBLIES TO BE ASSEMBLED AT LOUVER MANUFACTURER FACTORY.
2. CLIP ANGLES AND EXTENDED SILL TO BE PROVIDED BY LOUVER MANUFACTURER.
3. MOTOR ACTUATORS TO BE SIZED AND INSTALLED BY LOUVER MANUFACTURER.
4. INSTALLATION OF LOUVER TO BE IN ACCORDANCE WITH LOUVER MANUFACTURER'S RECOMMENDATIONS.

COMBINATION LOUVER/DAMPER
(vers 2)

H-23-0214

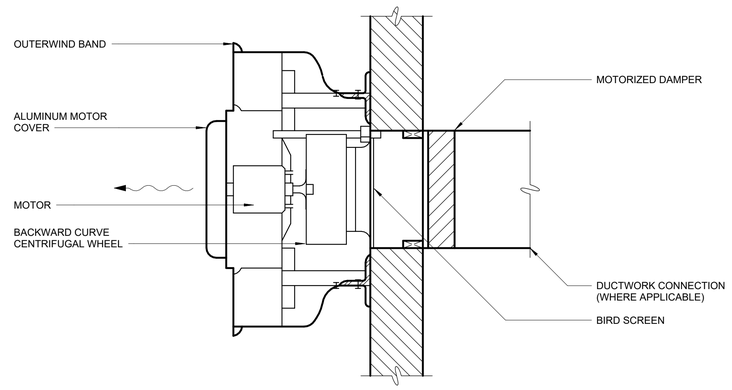

CENTRIFUGAL WALL EXHAUST FAN

H-23-0610

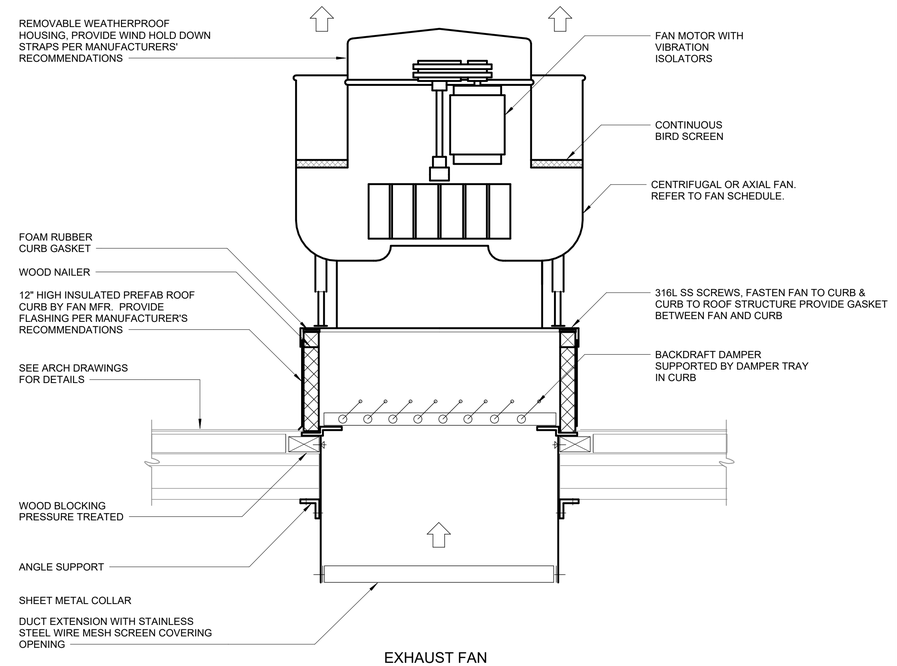

EXHAUST FAN

H-23-0614

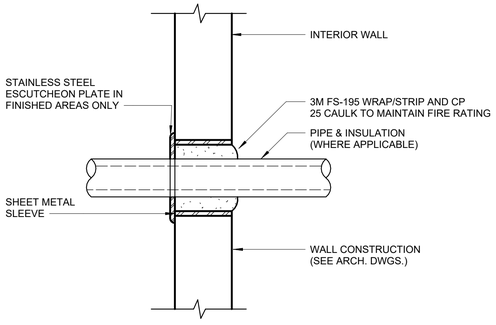

RATED WALL PENETRATION

P-22-0209

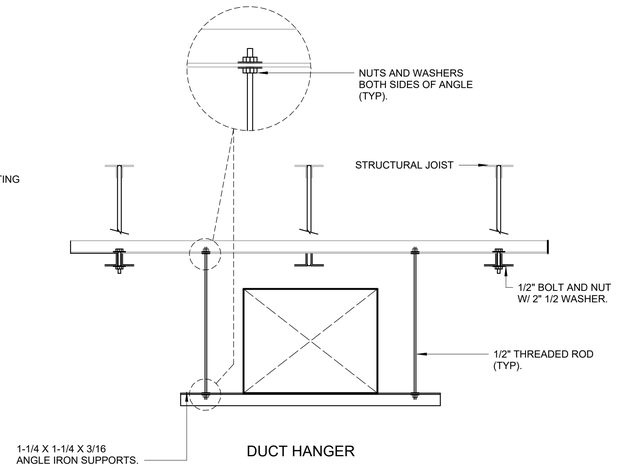

DUCT HANGER

H-23-0303

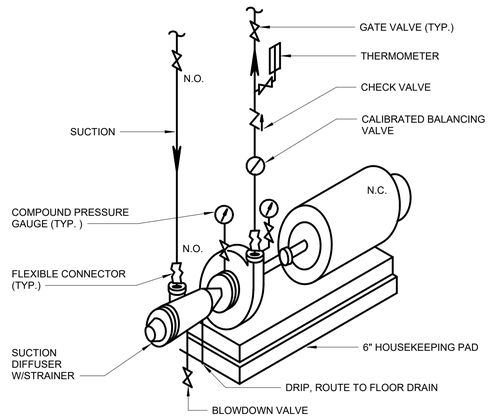

END SUCTION PUMP

H-23-0908

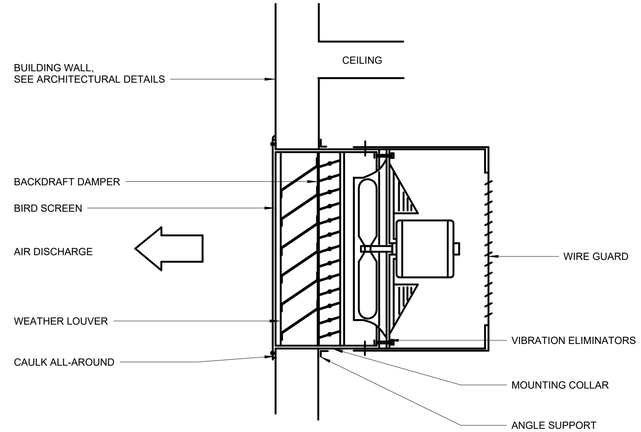

PROPELLER FAN B

H-23-0616

WARNING
IT IS A VIOLATION OF SECTION 7209.2 OF THE NEW YORK STATE EDUCATION LAW FOR ANY PERSON, UNLESS ACTING UNDER THE DIRECTION OF A LICENSED PROFESSIONAL ENGINEER, TO ALTER IN ANY WAY PLANS, SPECIFICATIONS, PLATS OR REPORTS TO WHICH THE SEAL OF A PROFESSIONAL ENGINEER HAS BEEN APPLIED. IF AN ITEM BEARING THE SEAL OF A PROFESSIONAL ENGINEER IS ALTERED, THE ALTERING ENGINEER SHALL AFFIX TO THE ITEM HIS SEAL AND THE NOTATION "ALTERED BY" FOLLOWED BY HIS SIGNATURE, THE DATE, AND A SPECIFIC DESCRIPTION OF THE ALTERATION.

REV	ISSUED FOR	DATE	BY

PROJECT ENGINEER:	R. FROST
DESIGNED BY:	M. GIORDANO
DRAWN BY:	R. CHIN
CHECKED BY:	R. VAN DYKE
IF THIS BAR DOES NOT MEASURE 1" THEN DRAWING IS NOT TO FULL SCALE	0 1/2" 1"

BID SET

MARC A. GIORDANO — STATE OF NEW YORK — 099858 — LICENSED PROFESSIONAL ENGINEER

Hazen

HAZEN AND SAWYER
498 SEVENTH AVENUE, 11th FLOOR
NEW YORK, NEW YORK 10018

WESTCHESTER JOINT WATER WORKS
MAMARONECK, NY

RYE LAKE WATER FILTRATION PLANT
HARRISON, NY

FILTRATION PLANT
HVAC
DETAILS - SHEET 2

DATE:	FEB 2025
HAZEN NO.:	90388-000
CONTRACT NO.:	A1364-A
DRAWING NUMBER:	H-605

Autodesk Docs://90388-000_Rye_Lake_Filtration/90388-000-WFP-H.rvt
2/18/2025 2:43:59 PM

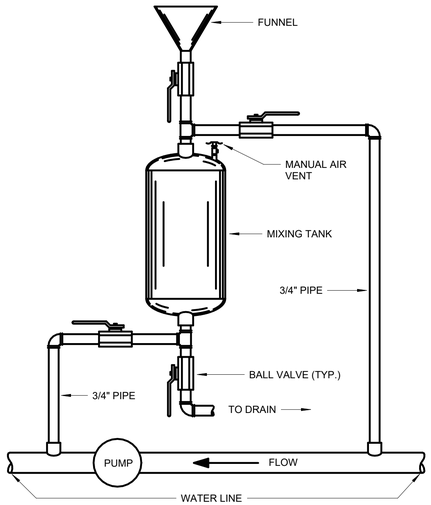

CHEMICAL FEED TANK

H-23-0635

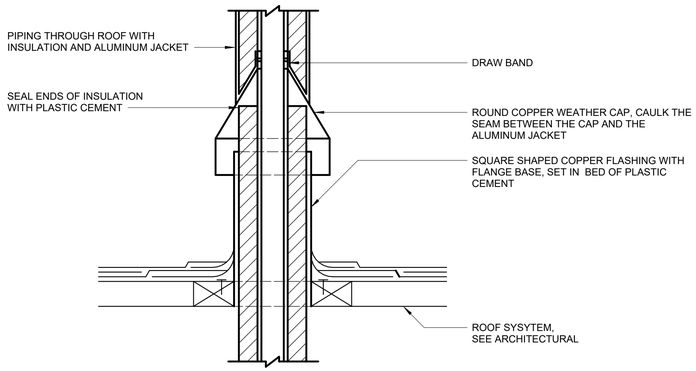

PIPE ROOF PENETRATION

P-22-0215

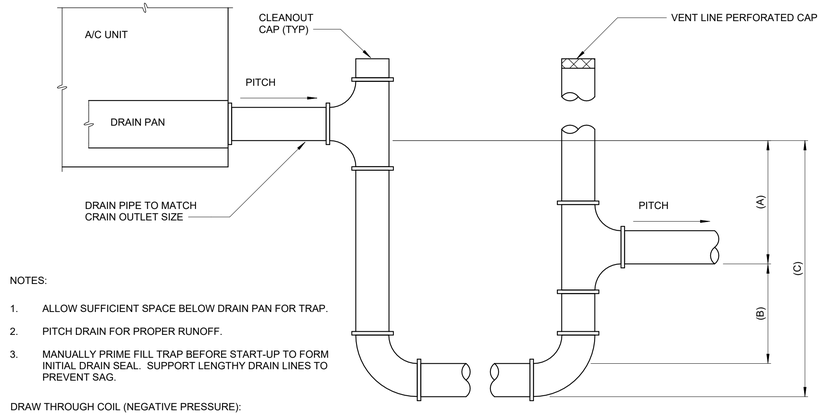

NOTES:

1. ALLOW SUFFICIENT SPACE BELOW DRAIN PAN FOR TRAP.
2. PITCH DRAIN FOR PROPER RUNOFF.
3. MANUALLY PRIME FILL TRAP BEFORE START-UP TO FORM INITIAL DRAIN SEAL. SUPPORT LENGTHY DRAIN LINES TO PREVENT SAG.

DRAW THROUGH COIL (NEGATIVE PRESSURE):

A. 1 INCH FOR EACH OF NEGATIVE PRESSURE PLUS 1 INCH (NEGATIVE STATIC PRESSURE IN INCHES WG WITH DIRTY FILTERS, COILS, AND MAXIMUM AIR FLOW.)

B. THIS DIMENSION IN INCHES MUST BE EQUAL TO MIN 1/2 OF THE (A) ABOVE.

C. EQUALS (A) + (B) + PIPE DIAMETER + INSULATION

AIR CONDITIONER COIL TRAP

H-23-0401

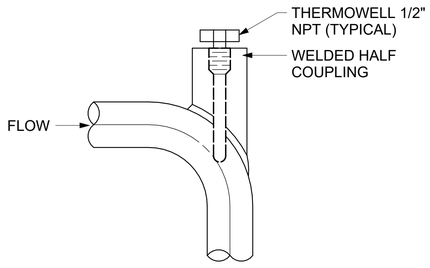

LINE SIZE 3 INCH OR LARGER

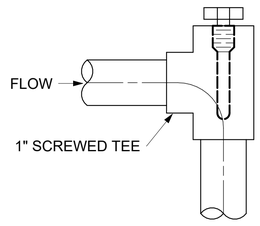

LINE SIZE SMALLER THAN 3 INCH

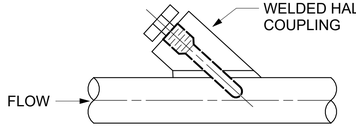

LINE SIZE 3 INCH OR LARGER

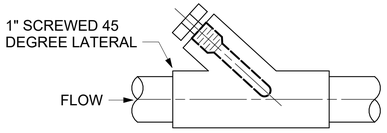

LINE SIZE SMALLER THAN 3 INCH

NOTE:

INSTALL THERMOWELL AT 1/2 THE INSIDE DIAMETER OF THE PROCESS PIPE.

1 PROCESS LINE TAP THERMOWELLS

NOT TO SCALE

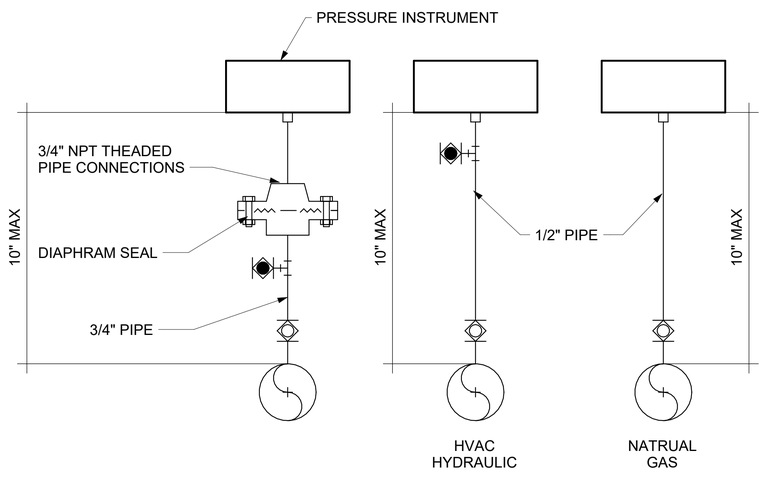

4 PRESSURE INSTRUMENTS

NOT TO SCALE

WARNING
IT IS A VIOLATION OF SECTION 7209.2 OF THE NEW YORK STATE EDUCATION LAW FOR ANY PERSON, UNLESS ACTING UNDER THE DIRECTION OF A LICENSED PROFESSIONAL ENGINEER, TO ALTER IN ANY WAY PLANS, SPECIFICATIONS, PLATS OR REPORTS TO WHICH THE SEAL OF A PROFESSIONAL ENGINEER HAS BEEN APPLIED. IF AN ITEM BEARING THE SEAL OF A PROFESSIONAL ENGINEER IS ALTERED, THE ALTERING ENGINEER SHALL AFFIX TO THE ITEM HIS SEAL AND THE NOTATION "ALTERED BY" FOLLOWED BY HIS SIGNATURE, THE DATE, AND A SPECIFIC DESCRIPTION OF THE ALTERATION.

REV	ISSUED FOR	DATE	BY

PROJECT ENGINEER:	R. FROST
DESIGNED BY:	M. GIORDANO
DRAWN BY:	R. CHIN
CHECKED BY:	R. VAN DYKE

IF THIS BAR DOES NOT MEASURE 1" THEN DRAWING IS NOT TO FULL SCALE 0 1/2" 1"

BID SET



Hazen

HAZEN AND SAWYER
498 SEVENTH AVENUE, 11th FLOOR
NEW YORK, NEW YORK 10018

WESTCHESTER JOINT WATER WORKS
MAMARONECK, NY

RYE LAKE WATER FILTRATION PLANT
HARRISON, NY

FILTRATION PLANT
HVAC
DETAILS - SHEET 3

DATE:	FEB 2025
HAZEN NO.:	90388-000
CONTRACT NO.:	A1364-A
DRAWING NUMBER:	H-606

Autodesk Docs://90388-000_Rye_Lake_Filtration/90388-000-WFP-H.rvt
2/18/2025 2:44:00 PM

ABBREVIATIONS

AD	AREA DRAIN
AFF	ABOVE FINISHED FLOOR
ASME	AMERICAN SOCIETY OF MECHANICAL ENGINEERS
ASTM	AMERICAN SOCIETY FOR TESTING AND MATERIALS
BFP(A)	BACKFLOW PREVENTER (ASSEMBLY)
BFV	BUTTERFLY VALVE
BHP	BRAKE HORSE POWER
BLDG	BUILDING
BV	BALL VALVE
CFM	CUBIC FEET PER MINUTE
CI	CAST IRON
CL	CENTERLINE
CO	CLEAN OUT
CO2	CARBON DIOXIDE
CODP	CLEAN OUT DECK PLATE
COL	COLUMN
CF	CUBIC FEET
CISPI	CAST IRON SOIL PIPE INSTITUTE
CLG	CEILING
CLW	CLEAR WATER DRAIN
CU	COPPER
CV	CHECK VALVE
CW	COLD WATER
DAF	DISSOLVED AIR FLOTATION
DCDA	DOUBLE CHECK DETECTOR ASSEMBLY BACKFLOW PREVENTER
DF	DIRNKING FOUNTAIN
DFU	DRAINAGE FIXTURE UNIT
DIA	DIAMETER
DN	DOWN TO FLOOR BELOW
DWH	DOMESTIC WATER HEATER
DWV	DRAIN, WASTE AND VENT
DROP	DROP WITHIN CURRENT VIEW
ED	EMERGENCY DRAIN
EFF	EFFICIENCY
EL	ELEVATION
ESE	EMERGENCY SHOWER AND EYEWASH
ET	EXPANSION TANK
FD	FLOOR DRAIN
FT	FEET
FLG	FLANGED
FP	FIRE PROTECTION
FS	FLOW SWITCH
GAL	GALLON
GC	GENERAL CONTRACTOR
GPH	GALLONS PER HOUR
GPM	GALLONS PER MINUTE
GV	GATE VALVE
HB	HOSE BIBB
HP	HORSEPOWER
HR	HOSE REEL
HVAC	HEATING, VENTILATION AND AIR CONDITIONING
HW	HOT WATER
HWS	HOT WATER SUPPLY
HWR	HOT WATER RETURN
HZ	HERTZ
INV	INVERT ELEVATION
IN	INCH
IW	INDIRECT WASTE
IWH	INSTANTANEOUS WATER HEATER
KS	KITCHEN SINK
KW	KILOWATT
LAV	LAVATORY
LB	POUND
LCP	LOCAL CONTROL PANEL
MAX	MAXIMUM
MIN	MINIMUM
MSB	MOP SERVICE BASIN
NC	NORMALLY CLOSED
NFPA	NATIONAL FIRE PROTECTION ASSOCIATION
NH	HUBLESS CAST IRON SOIL PIPE
NPHW	NON POTABLE HOT WATER
NPSH	NET POSITIVE SUCTION HEAD
NPW	NON POTABLE WATER
NRS	NON RISING STEM
NTS	NOT TO SCALE
OD	OUTSIDE DIAMETER OR OVERFLOW DRAIN
OSY	OUTSIDE SCREW AND YOKE
PG	PRESSURE GUAGE
PH	PHASE
PSI	POUNDS PER SQUARE INCH
PVC	POLY VINYL CHLORIDE
PW	POTABLE WATER
QTY	QUANTITY
RCP	RECIRCULATING PUMP
RD	ROOF DRAIN
REQD	REQUIRED
RISE	RISE WITHIN CURRENT VIEW
RM	ROOM
RPM	REVOLUTIONS PER MINUTE
RPZ	REDUCED PRESSURE ZONE BACKFLOW PREVENTER
RWL	RAIN WATER LEADER
SAN	SANITARY
SAS	SAMPLING SINK
SCADA	SUPERVISORY CONTROL AND DATA ACQUISITION
SCH	SCHEDULE
SD	STORM DRAIN
SF	SQUARE FOOT
SP	SUMP PUMP
SH	SHOWER
SS	SERVICE SINK
ST	STORAGE TANK
STOR	STORAGE
TD	TRENCH DRAIN
TMV	THERMOSTATIC MIXING VALVE
TYP	TYPICAL
TW	TEPID WATER
TWH	TEPID WATER HEATER
UP	UP TO FLOOR ABOVE
UL	UNDERWRITERS LABORATORY
UR	URINAL
UV	ULTRAVIOLET
V	SANITARY VENT
VAC	VACUUM
VAR	VARIABLE
VB	VACUUM BREAKER
VFD	VARIABLE FREQUENCY DRIVE
VTR	VENT THROUGH ROOF
W	WASTE
WC1	WATER CLOSET TYPE 1
WCO	WALL CLEAN OUT
WFD	WATER FLOW DETECTOR
WH	WATER HEATER
WHA	WATER HAMMER ARRESTER
WJWW	WESTCHESTER JOINT WATERWORKS
WM	WATER METER
WT	WEIGHT
XH	EXTRA HEAVY CAST IRON SOIL PIPE

LINETYPES - PLANS AND SECTIONS

———	NEW (PLUMBING)	– – – – – –	NEW PLUMBING, EMBEDDED IN SLAB (WHERE DENOTED ON SPECIFIC PLANS)
———	NEW (NON-PLUMBING)	– – – – – –	FUTURE (PLUMBING)

LINETYPES - POTABLE WATER RISER

——— – ———	POTABLE WATER	– – – – – –	NON POTABLE WATER
——— – – ———	HOT WATER SUPPLY	———	LEVEL/ROOM
——— – – ———	HOT WATER RETURN		

LINE TYPES - ISOMETRIC SANITARY RISER

. . . . .	VENT	———	DRAIN

SYMBOLS

- BALL VALVE - NORMALLY OPEN
- BALL VALVE - NORMALLY CLOSED
- MOTORIZED BALL VALVE
- GATE VALVE
- GLOBE VALVE
- GAS COCK OR PLUG VALVE
- BUTTERFLY VALVE
- PIPE CAP
- PRESSURE REDUCING VALVE
- CHECK VALVE
- BACKFLOW PREVENTER DOUBLE CHECK VALVE
- SMALL BACKFLOW PREVENTER REDUCED PRESSURE ZONE (RPZ) (2" OR SMALLER)
- LARGE BACKFLOW PREVENTER REDUCED PRESSURE ZONE (RPZ) (2" OR LARGER)
- PIPE CAP
- WATER METER
- THERMOSTATIC MIXING VALVE
- EYEWASH SHOWER
- LAVATORY/KITCHEN SINK
- FLEX CONNECTOR

- AUTOMATIC CONTROL VALVE 2-WAY
- AUTOMATIC CONTROL VALVE 3-WAY
- PIPING ELBOW, 90 TURNED DOWN
- PIPING ELBOW, 90 TURNED UP
- PIPING TEE, OUTLET TURNED DOWN
- PIPING TEE, OUTLET TURNED UP
- PRESSURE GAGE WITH SHUTOFF COCK (BALL VALVE)
- THERMOMETER
- FD OR RD — FLOOR OR ROOF DRAIN
- P-TRAP
- FLOOR CLEAN OUT
- CIRCULATING PUMP
- STRAINER WYE TYPE WITH BALL VALVE BLOW OFF
- HOSE BIBB
- TG — TEMPERATURE GAUGE
- PG — PRESSURE GAUGE
- DF
- SERVICE SINK/MOP SINK BASIN
- HOSE BIBB
- SHOWER
- URINAL

PIPE BREAK TAG

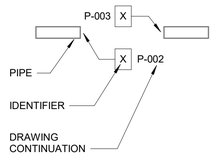

GENERAL NOTES

1. THE ENTIRE PLUMBING SYSTEM SHALL BE IN ACCORDANCE WITH THE 2020 EDITION OF THE NEW YORK STATE PLUMBING CODE, BUILDING CODE, AND ENERGY CODE REGULATIONS AND THE CODE OF THE VILLAGE OF HARRISON.
2. THE PIPING INDICATED ON THESE PLANS ARE DIAGRAMMATIC. ALL WORK SHALL BE COORDINATED WITH ALL OTHER TRADES PRIOR TO INSTALLATION. CONTRACTOR SHALL COORDINATE ROUTING OF ALL PIPING WITH OTHER TRADES AND SHALL PROVIDE ANY NECESSARY OFFSETS, REROUTING, TEES, ELBOWS, ETC. REQUIRED FOR A COMPLETE AND COORDINATED INSTALLATION.
3. THE CONTRACTOR SHALL OBTAIN AND PAY ALL FEES RELATED TO PERMITTING, AND INSPECTIONS.
4. CONTRACTOR SHALL COORDINATE ANY PLUMBING OR PIPING SYSTEM SHUT DOWN WITH THE OWNER 48 HOURS IN ADVANCE.
5. ALL PLUMBING AND PIPING SYSTEMS SHALL BE SUPPORTED AS REQUIRED BY CODE REQUIREMENTS AND PER MANUFACTURER'S RECOMMENDATIONS.
6. ALL PLUMBING FIXTURES SHALL BE INSTALLED IN ACCORDANCE WITH THE MANUFACTURERS WRITTEN INSTRUCTIONS. CONTRACTOR SHALL MAINTAIN ON-SITE THE WRITTEN INSTRUCTIONS FOR THE INSPECTOR'S REVIEW.
7. ALL PIPING PENETRATIONS THROUGH WALLS, AND FLOORS SHALL BE SEALED TO EQUAL THE FIRE RATING OF THE WALL OR FLOOR.
8. THE PLUMBING SYSTEM SHALL BE TESTED AS REQUIRED BY CODE OR BY THE REQUIREMENTS OF THE LOCAL PLUMBING INSPECTOR.
9. THE ENTIRE DOMESTIC WATER SYSTEM SHALL BE DISINFECTED IN ACCORDANCE WITH THE LOCAL HEALTH DEPARTMENT REQUIREMENTS AND AS SPECIFIED.
10. ROUTE ALL PIPING CONCEALED ABOVE CEILINGS, WITHIN WALLS OR IN CHASES EXCEPT AS SPECIFICALLY NOTED, OR IN MECHANICAL ROOMS.
11. SEE ARCHITECTURAL DRAWINGS FOR FIXTURE LOCATIONS AND MOUNTING HEIGHTS.
12. CONTRACTOR SHALL PROVIDE AND INSTALL WHEN REQUIRED BY CODE AN AIR GAP SERVING INDIVIDUAL FIXTURES, DEVICES, APPLIANCES OR APPARATUS.
13. SEE SANITARY WASTE AND VENT RISER SCHEMATIC DIAGRAM FOR WASTE AND VENT PIPE SIZES.
14. SEE DOMESTIC WATER RISER SCHEMATIC DIAGRAM FOR DOMESTIC WATER PIPE SIZES.
15. CONTRACTOR SHALL PROVIDE WATER STOPS AT EACH FIXTURE.
16. SIZE AND LOCATION OF CLEANOUTS (AS WELL AS ALL PLUMBING WORK) SHALL BE IN ACCORDANCE WITH THE PLUMBING CODE.
17. PATCH ALL SURFACES DISTURBED DURING THE CONSTRUCTION OF PLUMBING COMPONENTS TO MATCH ADJACENT SURFACES. WORK SHALL BE DONE ONLY BY WORKMAN SKILLED IN THE TRADE INVOLVED AND TO THE SATISFACTION OF THE OWNER'S REPRESENTATIVE.
18. ALL CONCEALED VALVES, WATER HAMMER ARRESTORS, CLEANOUTS, ETC., CONCEALED IN WALLS SHALL BE PROVIDED WITH AN ACCESS PANEL SUCH AS ZURN MODEL ZN-1460 OR APPROVED EQUAL.
19. ALL CONCEALED PIPING IN CHASE AREAS SHALL BE SUPPORTED WITH A PIPING SUPPORT SYSTEM SUCH AS SUMNER POSIFIX, STAKFIX AND CHANNEL OR APPROVED EQUAL.
20. DO NOT ROUTE PLUMBING PIPE OVER OR IN FRONT OF ELECTRICAL PANELS, BREAKERS, ETC.
21. MINIMUM SLOPE OF SANITARY DRAIN PIPES SHALL BE 1/4" PER FOOT FOR PIPE SIZES EQUAL TO OR LESS THAN 2-1/2" AND 1/8" PER FOOT FOR 3" AND LARGER.
22. ALL HOSE BIBS SHALL BE PROVIDED WITH VACUUM BREAKER BFP.
23. THE SYMBOLS AND ABBREVIATIONS LIST ON THIS SHEET IS A COMPREHENSIVE STANDARD GUIDE INTENDED FOR GENERAL USE ON ALL PROJECTS. THEREFORE NOT ALL THE SYMBOLS AND ABBREVIATIONS CONTAINED IN THIS LIST ARE NECESSARILY USED ON THIS PARTICULAR PROJECT AND SHOULD BE USED FOR CLARIFICATION ONLY.
24. THE CONTRACT DRAWINGS SO NOT SHOW ALL VALVES AND APPURTENACES. ALL DOMESTIC HOT WATER FIXTURES SHALL HAVE A POINT-OF-USE THERMOSTATIC MIXING VALVE IN CONFORMANCE WITH THE APPLICABLE ASSE STANDARD LISTED IN 2020 NYS PC 607.1.2. ALL DOMESTIC WATER BRANCH LINES SUPPLYING QUICK-CLOSING VALVES OR FIXTURES SHALL HAVE A WATER HAMMER ARRESTOR AT THE END OF THE BRANCH LINE CONFORMING TO NYS PC 604.9 AND ASSE 1010. SHUT-OFF VALVES SHALL BE INSTALLED WHERE REQUIRED BY NYS PC 606.1 AND 606.2.
25. ALL HORIZONTAL STORM DRAIN PIPING SHALL BE SLOPED AT 1/8" PER FOOT.

WARNING
IT IS A VIOLATION OF SECTION 7209.2 OF THE NEW YORK STATE EDUCATION LAW FOR ANY PERSON, UNLESS ACTING UNDER THE DIRECTION OF A LICENSED PROFESSIONAL ENGINEER, TO ALTER IN ANY WAY PLANS, SPECIFICATIONS, PLATS OR REPORTS TO WHICH THE SEAL OF A PROFESSIONAL ENGINEER HAS BEEN APPLIED. IF AN ITEM BEARING THE SEAL OF A PROFESSIONAL ENGINEER IS ALTERED, THE ALTERING ENGINEER SHALL AFFIX TO THE ITEM HIS SEAL AND THE NOTATION "ALTERED BY" FOLLOWED BY HIS SIGNATURE, THE DATE, AND A SPECIFIC DESCRIPTION OF THE ALTERATION.

REV	ISSUED FOR	DATE	BY

PROJECT ENGINEER:	R. FROST
DESIGNED BY:	M. GIORDANO
DRAWN BY:	J. LURIE
CHECKED BY:	R. VAN DYKE
IF THIS BAR DOES NOT MEASURE 1" THEN DRAWING IS NOT TO FULL SCALE	0 1/2" 1"

BID SET



Hazen
HAZEN AND SAWYER
498 SEVENTH AVENUE, 11th FLOOR
NEW YORK, NEW YORK 10018

WESTCHESTER JOINT WATER WORKS
MAMARONECK, NY

RYE LAKE WATER FILTRATION PLANT
HARRISON, NY

FILTRATION PLANT
PLUMBING
GENERAL NOTES, SYMBOLS AND ABBREVIATIONS

DATE:	FEB 2025
HAZEN NO.:	90388-000
CONTRACT NO.:	A1364-A
DRAWING NUMBER:	P-001

Autodesk Docs://90388-000_Rye_Lake_Filtration/90388-000-WFP-P.rvt
2/7/2025 2:27:46 PM

RISER DIAGRAM LINETYPE LEGEND

EXTERIOR WALL

PW
HWS
HWR
NPW
TW
LEVEL/ROOM

PENETRATION TO LOW ROOF ABOVE PROCESS ANALYSIS ROOM CEILING (205)
HIGH ROOF
HB-02
PENETRATION TO LOW ROOF IN STORAGE ROOM (216)
LOW ROOF EL. 421.00
1 1/2" BV
1 1/2" HWS
3/4" HWR
3/4" PW
1" NPW
TMV
ESE-01
HB-01
HYDRO-FLUOROSILICIC ACID (101)
SODIUM HYPOCHLORITE (102)
ESE-02
EL. 407.00
SODIUM HYPOCHLORITE CARRIER WATER (12 GPM) SEE DRAWING I-015 FOR CONTINUATION
EXTERIOR 1 1/2" NPW HOSE CONNECTION (REQUIRES MANUAL WINTERIZATION)
CORRIDOR (C01)
1 1/2" HW
1 1/2" PW (TYP FOR 12 TMV'S)
1 1/2" TW (TYP FOR 12 ESE'S)
1 1/2" HWS
2" NPW
3/4" PW (TYP FOR 9 HOSEBIBS)
2 1/2" NPW
1 1/2" NPW HOSE CONNECTION
1/2" PW
FUTURE HEATED 1 1/2" NPW TO FUTURE POLYMER (50 GPM)
FUTURE IWH-02
1 1/2" NPW
1" NPW TO FUTURE CO2 CARRIER WATER (10 GPM)
1 1/2" NPW HOSE CONNECTION
COAGULANT (103)
CORROSION INHIBITOR (104)
POLYMER/ SOFTENER (FUTURE) (105)
CORRIDOR (C01)
FILTERED WATER PUMPING AND DAF ROOM (106)
SODIUM HYDROXIDE (107)
EL. 407.00
EL. 383.00
DAF TANKS (122)
AIR SCOUR (202)
HVAC (201)
3/4" PW
1" PW
1 1/2" NPW
1 1/2" NPW HOSE CONNECTION
PROCESS ANALYSIS ROOM (205)
1/2" HWS
SS-01
SS-02
IWH-03
3/4" HWR
HVAC (208)
1 1/2" PW
RCP-01
2" NPW
WH
ST
ET
1" PW
1 1/2" NPW
1 1/2" NPW HOSE CONNECTION
DEWATERING ROOM (109)
1 1/2" HWS
2 1/2" NPW
FUTURE IWH-02
1 1/2" NPW
3/4" PW
HB-01
1 1/2" NPW HOSE CONNECTION
TMV
ESE-01
ESE-02
HB-02
PIPE GALLERY (006)
3/4" PW
1 1/2" NPW
1 1/2" NPW HOSE CONNECTION
UV DISINFECTION SYSTEM (004)
MAINT CLO (212)
2" PW
1/2" PW
1/2" HWS
MSB
HVAC (215)
3/4" PW
1 1/2" PW
HB-01
1 1/2" HWS
ET
DWH
OPEN OFFICE (214)
1/2" HWS
1/2" PW
KS
1/2" HWS (IN CHASE)
WC (213)
WC
LAV
1" PW
1/2" PW
1/2" HWS
MAINT CLO (114)
MEN'S LOCKER ROOM (118)
LOBBY (112)
2" PW
1/2" PW
SH
DF
MEN'S BATHROOM (117)
1/2" HWS
1" PW
1/2" PW
WC
UR
LAV
WOMEN'S BATHROOM (115)
WOMEN'S LOCKER ROOM (116)
1/2" HWS
1/2" PW
1/2" HWS
1" PW
2 1/2" X 2" REDUCER (TYP FOR 2)
FIRE SPRINKLER ROOM (110)
WATER METER
0-200 PSI
PG
4" NPW
2 1/2" PW
3" NPW
2 1/2" NPW
1 1/2" NPW
2 1/2" NPW
HR
1 1/2" NPW HW
TO CENTRIFUGE WASH WATER (100 GPM)
TO CENTRIFUGE POLYMER DILUTION SYSTEM (20 GPM)
M
2" NPW
4" NPW
2 1/2" PW
4" PW
BFP-02
BFP-01
1 1/2" NPW HOSE CONNECTION
SEE DRAWING I-020 FOR CONTINUATION
IWH-01
SEE DRAWING I-012 FOR CONTINUATION

WARNING
IT IS A VIOLATION OF SECTION 7209.2 OF THE NEW YORK STATE EDUCATION LAW FOR ANY PERSON, UNLESS ACTING UNDER THE DIRECTION OF A LICENSED PROFESSIONAL ENGINEER, TO ALTER IN ANY WAY PLANS, SPECIFICATIONS, PLATS OR REPORTS TO WHICH THE SEAL OF A PROFESSIONAL ENGINEER HAS BEEN APPLIED. IF AN ITEM BEARING THE SEAL OF A PROFESSIONAL ENGINEER IS ALTERED, THE ALTERING ENGINEER SHALL AFFIX TO THE ITEM HIS SEAL AND THE NOTATION "ALTERED BY" FOLLOWED BY HIS SIGNATURE, THE DATE, AND A SPECIFIC DESCRIPTION OF THE ALTERATION.

REV	ISSUED FOR	DATE	BY

PROJECT ENGINEER:	R. FROST
DESIGNED BY:	M. GIORDANO
DRAWN BY:	J. LURIE
CHECKED BY:	R. VAN DYKE

IF THIS BAR DOES NOT MEASURE 1" THEN DRAWING IS NOT TO FULL SCALE 0 1/2" 1"

BID SET

STATE OF NEW YORK · MARC A. GIORDANO · 099858 · PROFESSIONAL ENGINEER

Hazen

HAZEN AND SAWYER
498 SEVENTH AVENUE, 11th FLOOR
NEW YORK, NEW YORK 10018

WESTCHESTER JOINT WATER WORKS
MAMARONECK, NY

RYE LAKE WATER FILTRATION PLANT
HARRISON, NY

FILTRATION PLANT
PLUMBING
DOMESTIC WATER RISER DIAGRAM

DATE:	FEB 2025
HAZEN NO.:	90388-000
CONTRACT NO.:	A1364-A
DRAWING NUMBER:	P-002

Autodesk Docs://90388-000_Rye_Lake_Filtration/90388-000-WFP-P.rvt
2/7/2025 2:27:47 PM

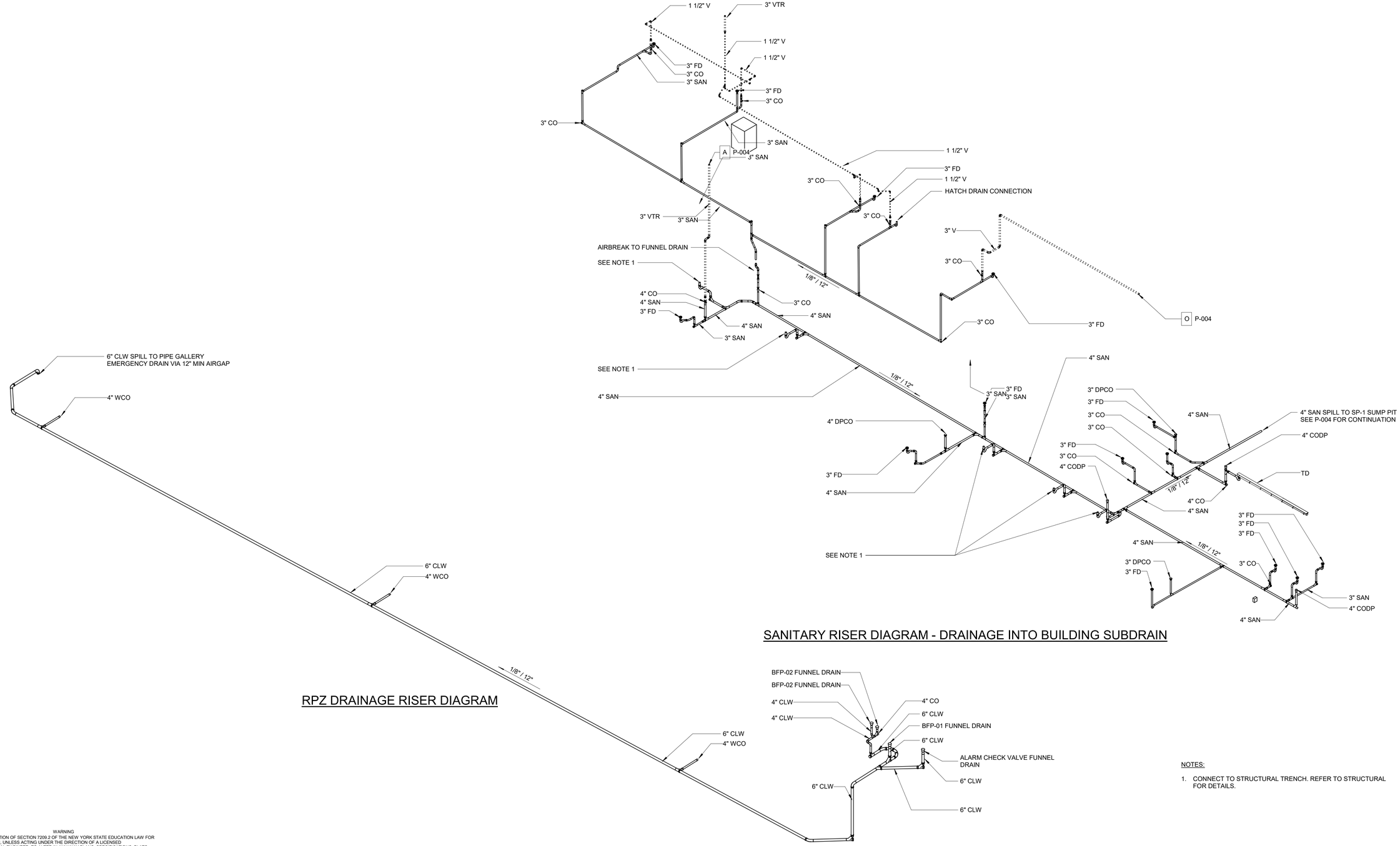

RPZ DRAINAGE RISER DIAGRAM

SANITARY RISER DIAGRAM - DRAINAGE INTO BUILDING SUBDRAIN

NOTES:

1. CONNECT TO STRUCTURAL TRENCH. REFER TO STRUCTURAL FOR DETAILS.

WARNING
IT IS A VIOLATION OF SECTION 7209.2 OF THE NEW YORK STATE EDUCATION LAW FOR ANY PERSON, UNLESS ACTING UNDER THE DIRECTION OF A LICENSED PROFESSIONAL ENGINEER, TO ALTER IN ANY WAY PLANS, SPECIFICATIONS, PLATS OR REPORTS TO WHICH THE SEAL OF A PROFESSIONAL ENGINEER HAS BEEN APPLIED. IF AN ITEM BEARING THE SEAL OF A PROFESSIONAL ENGINEER IS ALTERED, THE ALTERING ENGINEER SHALL AFFIX TO THE ITEM HIS SEAL AND THE NOTATION "ALTERED BY" FOLLOWED BY HIS SIGNATURE, THE DATE, AND A SPECIFIC DESCRIPTION OF THE ALTERATION.

REV	ISSUED FOR	DATE	BY

PROJECT ENGINEER:	R. FROST
DESIGNED BY:	M. GIORDANO
DRAWN BY:	J. LURIE
CHECKED BY:	R. VAN DYKE

IF THIS BAR DOES NOT MEASURE 1" THEN DRAWING IS NOT TO FULL SCALE 0 1/2" 1"

BID SET

STATE OF NEW YORK · MARC A. GIORDANO · 099858 · PROFESSIONAL ENGINEER

Hazen

HAZEN AND SAWYER
498 SEVENTH AVENUE, 11th FLOOR
NEW YORK, NEW YORK 10018

WESTCHESTER JOINT WATER WORKS
MAMARONECK, NY

RYE LAKE WATER FILTRATION PLANT
HARRISON, NY

FILTRATION PLANT
PLUMBING
SANITARY RISER DIAGRAM - SHEET 1

DATE:	FEB 2025
HAZEN NO.:	90388-000
CONTRACT NO.:	A1364-A
DRAWING NUMBER:	P-003

Autodesk Docs://90388-000_Rye_Lake_Filtration/90388-000-WFP-P.rvt
2/7/2025 2:27:49 PM

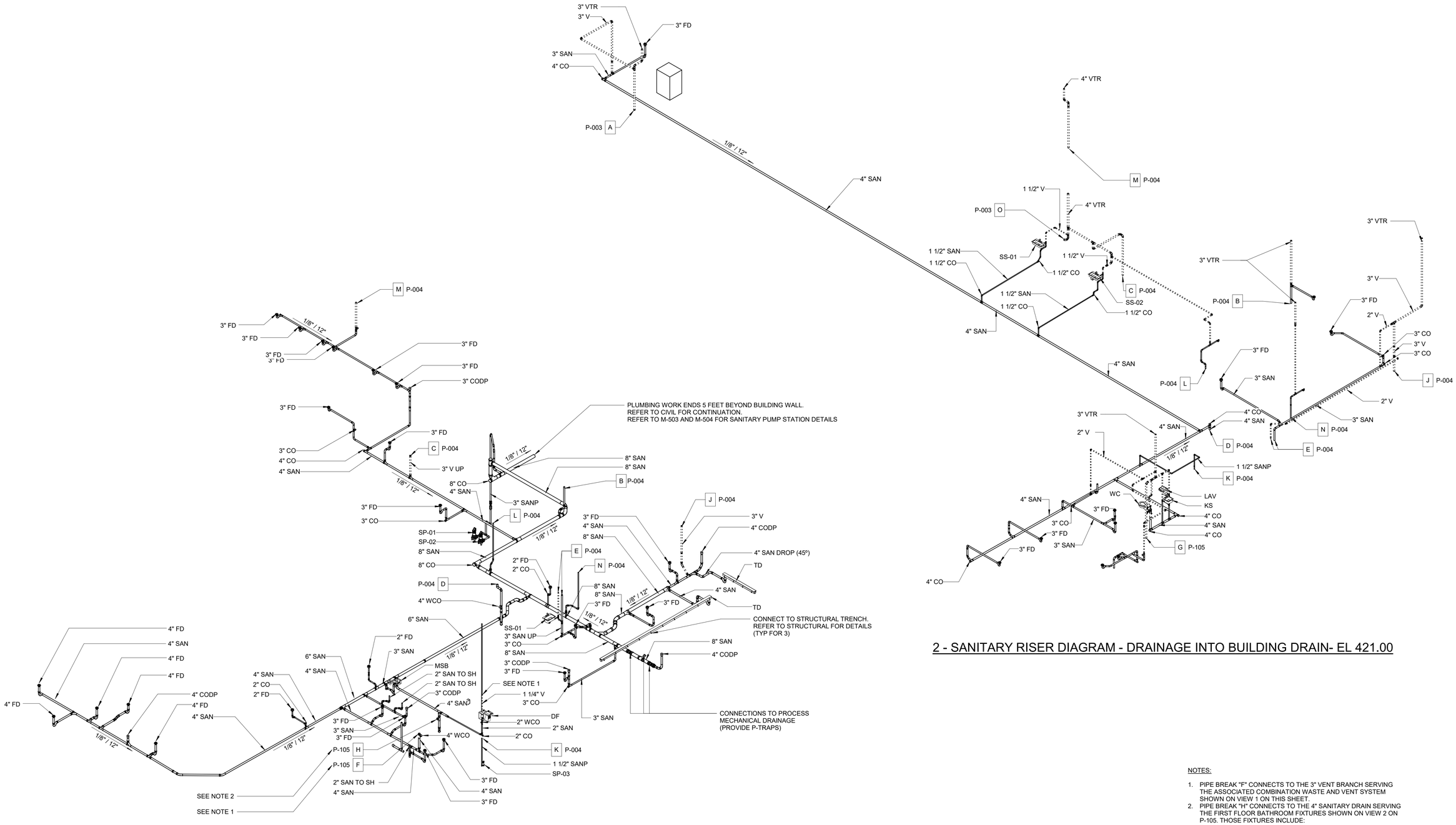

1 - SANITARY RISER DIAGRAM - DRAINAGE INTO BUILDING DRAIN - EL 407.00

2 - SANITARY RISER DIAGRAM - DRAINAGE INTO BUILDING DRAIN- EL 421.00

NOTES:

1. PIPE BREAK "F" CONNECTS TO THE 3" VENT BRANCH SERVING THE ASSOCIATED COMBINATION WASTE AND VENT SYSTEM SHOWN ON VIEW 1 ON THIS SHEET.
2. PIPE BREAK "H" CONNECTS TO THE 4" SANITARY DRAIN SERVING THE FIRST FLOOR BATHROOM FIXTURES SHOWN ON VIEW 2 ON P-105. THOSE FIXTURES INCLUDE:
   A. TWO (2) WC'S
   B. THREE (3) LAV'S
   C. ONE (1) UR

WARNING
IT IS A VIOLATION OF SECTION 7209.2 OF THE NEW YORK STATE EDUCATION LAW FOR ANY PERSON, UNLESS ACTING UNDER THE DIRECTION OF A LICENSED PROFESSIONAL ENGINEER, TO ALTER IN ANY WAY PLANS, SPECIFICATIONS, PLATS OR REPORTS TO WHICH THE SEAL OF A PROFESSIONAL ENGINEER HAS BEEN APPLIED. IF AN ITEM BEARING THE SEAL OF A PROFESSIONAL ENGINEER IS ALTERED, THE ALTERING ENGINEER SHALL AFFIX TO THE ITEM HIS SEAL AND THE NOTATION "ALTERED BY" FOLLOWED BY HIS SIGNATURE, THE DATE, AND A SPECIFIC DESCRIPTION OF THE ALTERATION.

REV	ISSUED FOR	DATE	BY

PROJECT ENGINEER:	R. FROST
DESIGNED BY:	M. GIORDANO
DRAWN BY:	J. LURIE
CHECKED BY:	R. VAN DYKE
IF THIS BAR DOES NOT MEASURE 1" THEN DRAWING IS NOT TO FULL SCALE	0 1/2" 1"

BID SET

STATE OF NEW YORK — MARC A. GIORDANO — 099858 — PROFESSIONAL ENGINEER

Hazen

HAZEN AND SAWYER
498 SEVENTH AVENUE, 11th FLOOR
NEW YORK, NEW YORK 10018

WESTCHESTER JOINT WATER WORKS
MAMARONECK, NY

RYE LAKE WATER FILTRATION PLANT
HARRISON, NY

FILTRATION PLANT
PLUMBING
SANITARY RISER DIAGRAM - SHEET 2

DATE:	FEB 2025
HAZEN NO.:	90388-000
CONTRACT NO.:	A1364-A
DRAWING NUMBER:	P-004

Autodesk Docs://90388-000_Rye_Lake_Filtration/90388-000-WFP-P.rvt
2/7/2025 2:27:53 PM

1. ALL HORIZONTAL STORM PIPING SHALL BE SLOPED AT 1/8" PER FOOT.

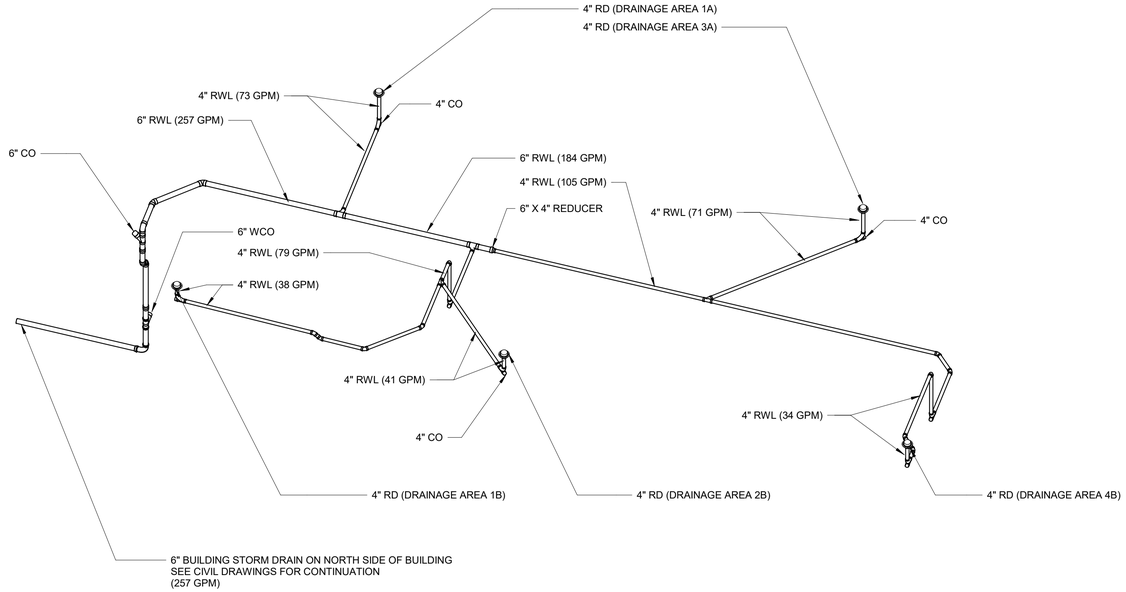

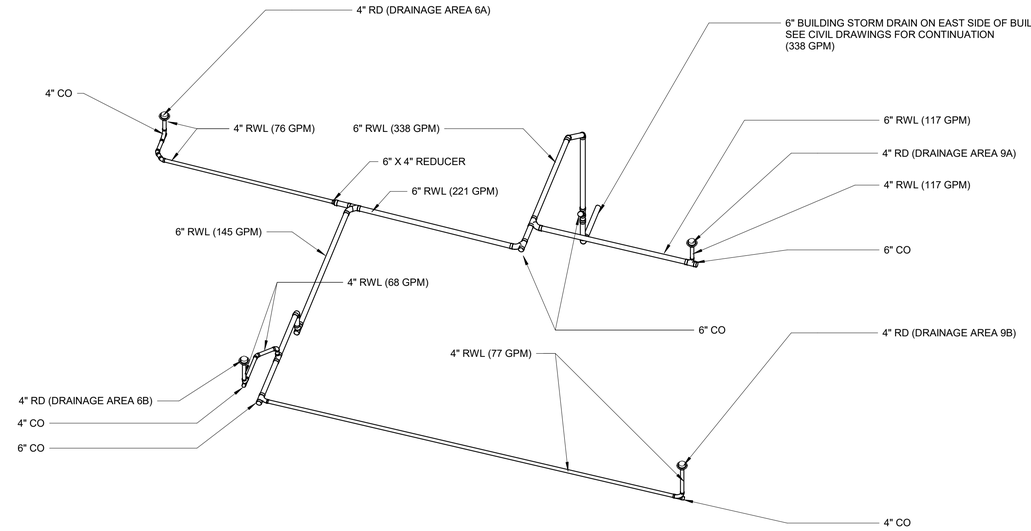

WARNING
IT IS A VIOLATION OF SECTION 7209.2 OF THE NEW YORK STATE EDUCATION LAW FOR ANY PERSON, UNLESS ACTING UNDER THE DIRECTION OF A LICENSED PROFESSIONAL ENGINEER, TO ALTER IN ANY WAY PLANS, SPECIFICATIONS, PLATS OR REPORTS TO WHICH THE SEAL OF A PROFESSIONAL ENGINEER HAS BEEN APPLIED. IF AN ITEM BEARING THE SEAL OF A PROFESSIONAL ENGINEER IS ALTERED, THE ALTERING ENGINEER SHALL AFFIX TO THE ITEM HIS SEAL AND THE NOTATION "ALTERED BY" FOLLOWED BY HIS SIGNATURE, THE DATE, AND A SPECIFIC DESCRIPTION OF THE ALTERATION.

REV	ISSUED FOR	DATE	BY

PROJECT ENGINEER:	R. FROST
DESIGNED BY:	M. GIORDANO
DRAWN BY:	J. LURIE
CHECKED BY:	R. VAN DYKE
IF THIS BAR DOES NOT MEASURE 1" THEN DRAWING IS NOT TO FULL SCALE	0 1/2" 1"

BID SET

HAZEN AND SAWYER
498 SEVENTH AVENUE, 11th FLOOR
NEW YORK, NEW YORK 10018

WESTCHESTER JOINT WATER WORKS
MAMARONECK, NY

RYE LAKE WATER FILTRATION PLANT
HARRISON, NY

FILTRATION PLANT
PLUMBING
STORM RISER DIAGRAM

DATE:	FEB 2025
HAZEN NO.:	90388-000
CONTRACT NO.:	A1364-A
DRAWING NUMBER:	P-005

Autodesk Docs://90388-000_Rye_Lake_Filtration/90388-000-WFP-P.rvt
2/7/2025 2:27:54 PM

NOTES:

1. THE WORK OF OTHER TRADES IS HIDDEN OR SHOWN HALF-TONED FOR CLARITY.
2. 3" SUMP PUMP DISCHARGE SHALL CONNECT TO BUILDING DRAIN AT TOP OF PIPE.
3. SEE C-131 FOR CONTINUATION.
4. A SHORT LENGTH OF 4" SAN PIPE SHALL BE INSTALLED IN THE STRUCTURAL ENCASEMENT SHOWN. COORDINATE WITH INSTALLATION OF PROCESS PIPE.
5. A SHORT LENGTH OF 6" FUD PIPE SHALL BE INSTALLED IN THE STRUCTURAL ENCASEMENT SHOWN. THIS PIPE SHALL NOT BE PERFORATED, SPECIFICATION SHALL MATCH THAT OF BELOW GROUND RWL ON P-601. CONNECTION BETWEEN XH CAST IRON AND PERFORATED PVC SHALL BE MADE OUTSIDE OF THE ENCASEMENT.
6. PIPING SHALL BE INSTALLED IN THE STRUCTURAL ENCASEMENT SHOWN. COORDINATE WITH INSTALLATION OF PROCESS PIPE BELOW. PROVIDE P-TRAPS. REFER TO MECHANICAL DRAWINGS FOR CONTINUATION.

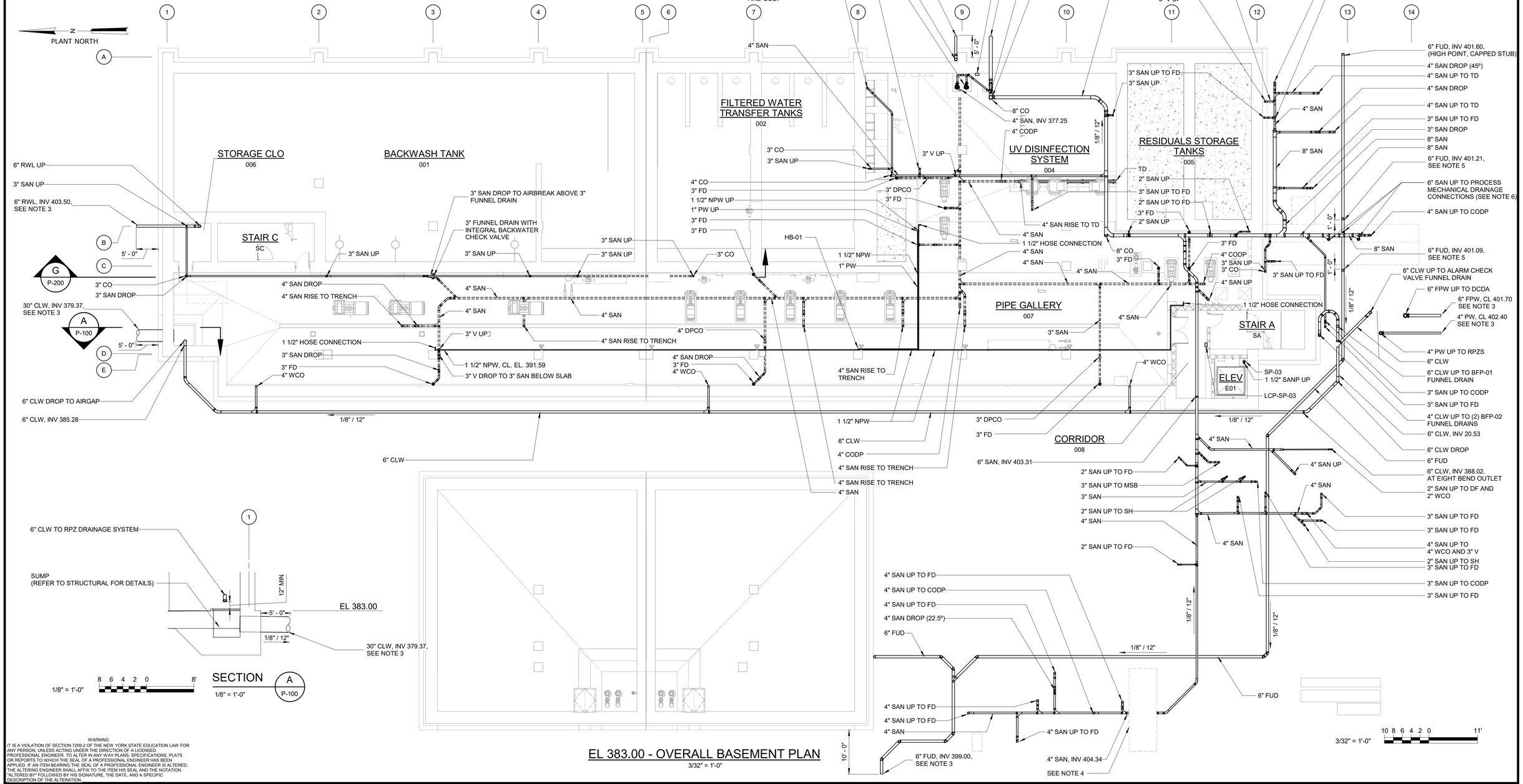

EL 383.00 - OVERALL BASEMENT PLAN

3/32" = 1'-0"

WARNING
IT IS A VIOLATION OF SECTION 7209.2 OF THE NEW YORK STATE EDUCATION LAW FOR ANY PERSON, UNLESS ACTING UNDER THE DIRECTION OF A LICENSED PROFESSIONAL ENGINEER, TO ALTER IN ANY WAY PLANS, SPECIFICATIONS, PLATS OR REPORTS TO WHICH THE SEAL OF A PROFESSIONAL ENGINEER HAS BEEN APPLIED. IF AN ITEM BEARING THE SEAL OF A PROFESSIONAL ENGINEER IS ALTERED, THE ALTERING ENGINEER SHALL AFFIX TO THE ITEM HIS SEAL AND THE NOTATION "ALTERED BY" FOLLOWED BY HIS SIGNATURE, THE DATE, AND A SPECIFIC DESCRIPTION OF THE ALTERATION.

REV	ISSUED FOR	DATE	BY

PROJECT ENGINEER:	R. FROST
DESIGNED BY:	M. GIORDANO
DRAWN BY:	J. LURIE
CHECKED BY:	R. VAN DYKE
IF THIS BAR DOES NOT MEASURE 1" THEN DRAWING IS NOT TO FULL SCALE	0 1/2" 1"

BID SET

Hazen
HAZEN AND SAWYER
498 SEVENTH AVENUE, 11th FLOOR
NEW YORK, NEW YORK 10018

WESTCHESTER JOINT WATER WORKS
MAMARONECK, NY

RYE LAKE WATER FILTRATION PLANT
HARRISON, NY

FILTRATION PLANT
PLUMBING
BASEMENT PLAN EL 383.00

DATE:	FEB 2025
HAZEN NO.:	90388-000
CONTRACT NO.:	A1364-A
DRAWING NUMBER:	P-100

Autodesk Docs://90388-000_Rye_Lake_Filtration/90388-000-WFP-P.rvt
2/7/2025 2:28:00 PM

PLANT NORTH

HYDROFLUOROSILICIC ACID
101

SODIUM HYPOCHLORITE
102

COAGULANT
103

POLYMER/ SOFTENER (FUTURE)
105

CLO
108

CORROSION INHIBITOR
104

CORRIDOR
C02

STAIR C
SC

EXIT PASSAGEWAY
124

EQUIPMENT PLATFORM
123

ESE-01
1" NPW, CL 417.69
TO SODIUM HYPOCHLORITE CARRIER WATER
ESE-02
TMV
HB-02
3/4" PW, CL. EL. 418.00
1" NPW TO FUTURE CO2 CARRIER WATER
P-22-0209 TYP
3" FD
ESE-01
HB-01
ESE-01
3" SAN DROP INTO SLAB & 1 1/2" V RISE
3" CO ON VERTICAL AFF
3" FD
ESE-01
HB-01
P-22-0209 TYP
TMV (TYP FOR 4 NEARBY)
3/4" HWR, CL. EL. 418.00
1 1/2" NPW, CL 418.00
6" WCO
SEE NOTE 3
1 1/2" HOSE CONNECTION
1 1/2" BV
B
3" SAN DN
6" RWL DN
6" CO ON VERTICAL AFF
C
6" RWL UP
1 1/2" PW
1 1/2" HWS
1 1/2" PW
1 1/2" HWS
3/4" PW UP TO HB-02
1 1/2" NPW
1 1/2" V
3/4" HWR, CL 418.00
1" NPW DROP
P-22-0209
1 1/2" HWS, CL 418.00
1 1/2" HWS, CL 418.00
1 1/2" PW, CL 418.00
3" SAN DROP INTO SLAB, 1 1/2" V RISE
3" CO ON VERTICAL AFF
1 1/2" HWS, CL 419.00
1 1/2" HWS, CL 419.00
1 1/2" PW, CL 419.00
1 1/2" BV (TYP FOR 3)
1 1/2" V DROP
1 1/2" V DROP (45°)
1 1/2" V UP
1 1/2" V DROP (45°)
1 1/2" PW, CL 418.00
3/4" PW UP TO HB-02
1 1/2" PW, CL 418.00
1 1/2" V DROP
3/4" HWR, CL 418.00
2" NPW, CL 418.00
3" SAN
3" SAN DN
3" SAN UP TO FD
3" V UP
4" CO
4" SAN
P-22-0209 TYP
TO FUTURE POLYMER
FUTURE IWH-02
2 1/2" NPW TO POLYMER, SEE PROCESS MECHANICAL DRAWINGS FOR CONTINUATION
1 1/2" NPW
1-1/2" NPW HOSE CONNECTION
3" FD
ESE-01
2 1/2" NPW, CL 418.20
TMV (TYP FOR 3 NEARBY)
2 1/2" NPW DROP
3" SAN DROP INTO SLAB AND 1 1/2" V RISE
HB-01
2 1/2" NPW, CL. EL. 418.75
1 1/2" PW, CL. EL. 418.00
1 1/2" HWS, CL. EL. 418.00
3/4" HWR, CL. EL. 418.00
2 1/2" NPW, CL. EL. 418.00
2 1/2" NPW DROP
SEE NOTE 5
3" SAN DROP INTO SLAB AND 1 1/2" V RISE
3" CO ON VERTICAL AFF
2 1/2" NPW DROP
3" SAN DN
3" CO ON VERTICAL AFF
4" SAN
3" SAN DN
MATCHLINE
SEE DRAWING P-102

NOTES:

1. THE WORK OF OTHER DISCIPLINES IS HIDDEN OR HALF-TONE FOR CLARITY. REFER TO CONTRACT DRAWINGS OF OTHER DISCIPLINES FOR ADDITIONAL WORK BY OTHERS.
2. DRAINAGE PIPING SERVING CHEMICAL AREAS SHALL BE EMBEDDED IN SLAB.
3. EXTERIOR 1 1/2" PW CONNECTION SHALL REQUIRE MANUAL WINTERIZATION BY CLOSING THE INTERIOR BALL VALVE AND DRAINING THE EXPOSED PORTION OF PIPE. INSTALL NO LESS THAN 4 FEET OF DEVELOPED PIPE LENGTH BETWEEN THE INERIOR BALL VALVE AND THE INTERIOR FACE OF THE WALL. SLOPE PIPING TOWARDS EXTERIOR TO DRAIN FULLY.
4. SANITARY PIPING SHOWN WITH HIDDEN LINES IN THIS VIEW IS EMBEDDED IN THE FLOOR SLAB.
5. SEE STRUCTURAL DETAIL S-05-0806. PROVIDE EMBEDDED 1 1/2" P-TRAP.

EL 407.00 - AREA 1

3/16" = 1'-0"

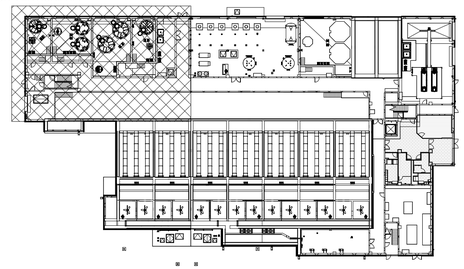

EL 407.00 - KEY PLAN

NTS

3/16" = 1'-0"

6 4 2 0 5'

WARNING
IT IS A VIOLATION OF SECTION 7209.2 OF THE NEW YORK STATE EDUCATION LAW FOR ANY PERSON, UNLESS ACTING UNDER THE DIRECTION OF A LICENSED PROFESSIONAL ENGINEER, TO ALTER IN ANY WAY PLANS, SPECIFICATIONS, PLATS OR REPORTS TO WHICH THE SEAL OF A PROFESSIONAL ENGINEER HAS BEEN APPLIED. IF AN ITEM BEARING THE SEAL OF A PROFESSIONAL ENGINEER IS ALTERED, THE ALTERING ENGINEER SHALL AFFIX TO THE ITEM HIS SEAL AND THE NOTATION "ALTERED BY" FOLLOWED BY HIS SIGNATURE, THE DATE, AND A SPECIFIC DESCRIPTION OF THE ALTERATION.

REV	ISSUED FOR	DATE	BY

PROJECT ENGINEER:	R. FROST
DESIGNED BY:	M. GIORDANO
DRAWN BY:	J. LURIE
CHECKED BY:	R. VAN DYKE

IF THIS BAR DOES NOT MEASURE 1" THEN DRAWING IS NOT TO FULL SCALE 0 1/2" 1"

BID SET

MARC A. GIORDANO — STATE OF NEW YORK — 099858 — PROFESSIONAL ENGINEER

Hazen
HAZEN AND SAWYER
498 SEVENTH AVENUE, 11th FLOOR
NEW YORK, NEW YORK 10018

WESTCHESTER JOINT WATER WORKS
MAMARONECK, NY

RYE LAKE WATER FILTRATION PLANT
HARRISON, NY

FILTRATION PLANT
PLUMBING
EL. 407.00 - AREA 1

DATE:	FEB 2025
HAZEN NO.:	90388-000
CONTRACT NO.:	A1364-A
DRAWING NUMBER:	P-101

Autodesk Docs://90388-000_Rye_Lake_Filtration/90388-000-WFP-P.rvt
2/7/2025 2:28:08 PM

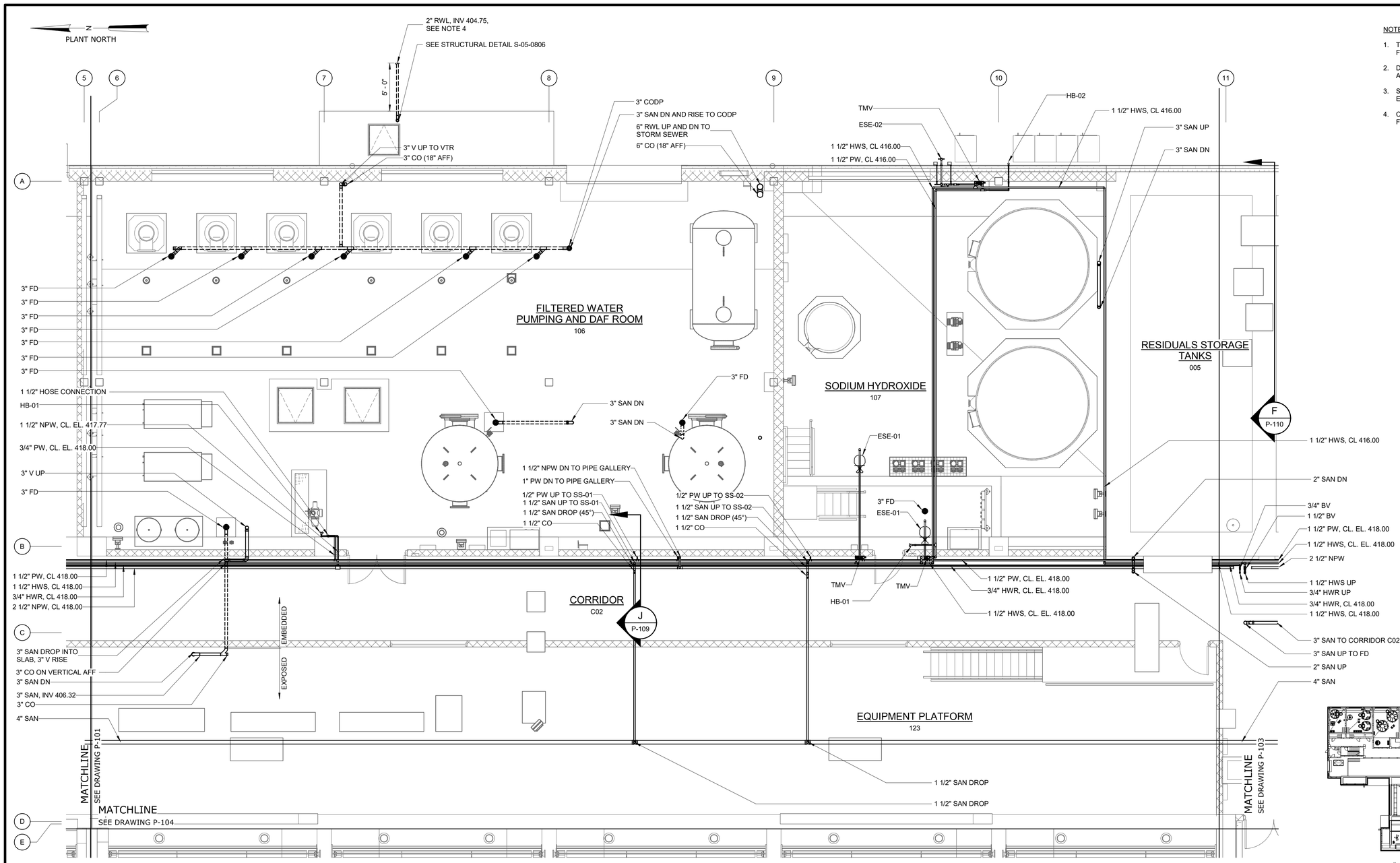

EL 407.00 - AREA 2

3/16" = 1'-0"

NOTES:

1. THE WORK OF OTHER DISCIPLINES IS HIDDEN OR HALF-TONE FOR CLARITY.
2. DRAINAGE PIPING IN FILTERED WATER PUMPING AND DAF ROOM AND CHEMICAL AREAS SHALL BE EMBEDDED IN SLAB.
3. SANITARY PIPING SHOWN WITH HIDDEN LINES IN THIS VIEW IS EMBEDDED IN THE FLOOR SLAB.
4. CONNECT TO NEARBY STORM SEWER. COORDINATE WITH CIVIL FOR CONNECTION AND INVERT.

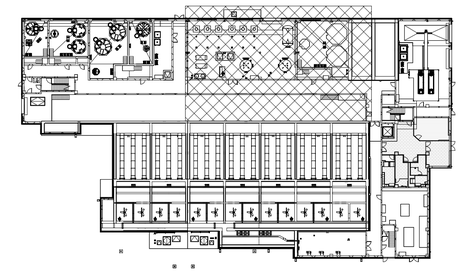

EL 407.00 - KEY PLAN

NTS

3/16" = 1'-0" 6 4 2 0 5'

WARNING
IT IS A VIOLATION OF SECTION 7209.2 OF THE NEW YORK STATE EDUCATION LAW FOR ANY PERSON, UNLESS ACTING UNDER THE DIRECTION OF A LICENSED PROFESSIONAL ENGINEER, TO ALTER IN ANY WAY PLANS, SPECIFICATIONS, PLATS OR REPORTS TO WHICH THE SEAL OF A PROFESSIONAL ENGINEER HAS BEEN APPLIED. IF AN ITEM BEARING THE SEAL OF A PROFESSIONAL ENGINEER IS ALTERED, THE ALTERING ENGINEER SHALL AFFIX TO THE ITEM HIS SEAL AND THE NOTATION "ALTERED BY" FOLLOWED BY HIS SIGNATURE, THE DATE, AND A SPECIFIC DESCRIPTION OF THE ALTERATION.

REV	ISSUED FOR	DATE	BY

PROJECT ENGINEER:	R. FROST
DESIGNED BY:	M. GIORDANO
DRAWN BY:	J. LURIE
CHECKED BY:	R. VAN DYKE
IF THIS BAR DOES NOT MEASURE 1" THEN DRAWING IS NOT TO FULL SCALE	0 1/2" 1"

BID SET

STATE OF NEW YORK · MARC A. GIORDANO · 099858 · LICENSED PROFESSIONAL ENGINEER

Hazen

HAZEN AND SAWYER
498 SEVENTH AVENUE, 11th FLOOR
NEW YORK, NEW YORK 10018

WESTCHESTER JOINT WATER WORKS
MAMARONECK, NY

RYE LAKE WATER FILTRATION PLANT
HARRISON, NY

FILTRATION PLANT
PLUMBING
EL. 407.00 - AREA 2

DATE:	FEB 2025
HAZEN NO.:	90388-000
CONTRACT NO.:	A1364-A
DRAWING NUMBER:	P-102

Autodesk Docs://90388-000_Rye_Lake_Filtration/90388-000-WFP-P.rvt
2/7/2025 2:28:13 PM

PLANT NORTH

NOTES:

1. THE WORK OF OTHER DISCIPLINES IS HIDDEN OR HALF-TONE FOR CLARITY. REFER TO CONTRACT DRAWINGS OF OTHER DISCIPLINES FOR ADDITIONAL WORK BY OTHERS.

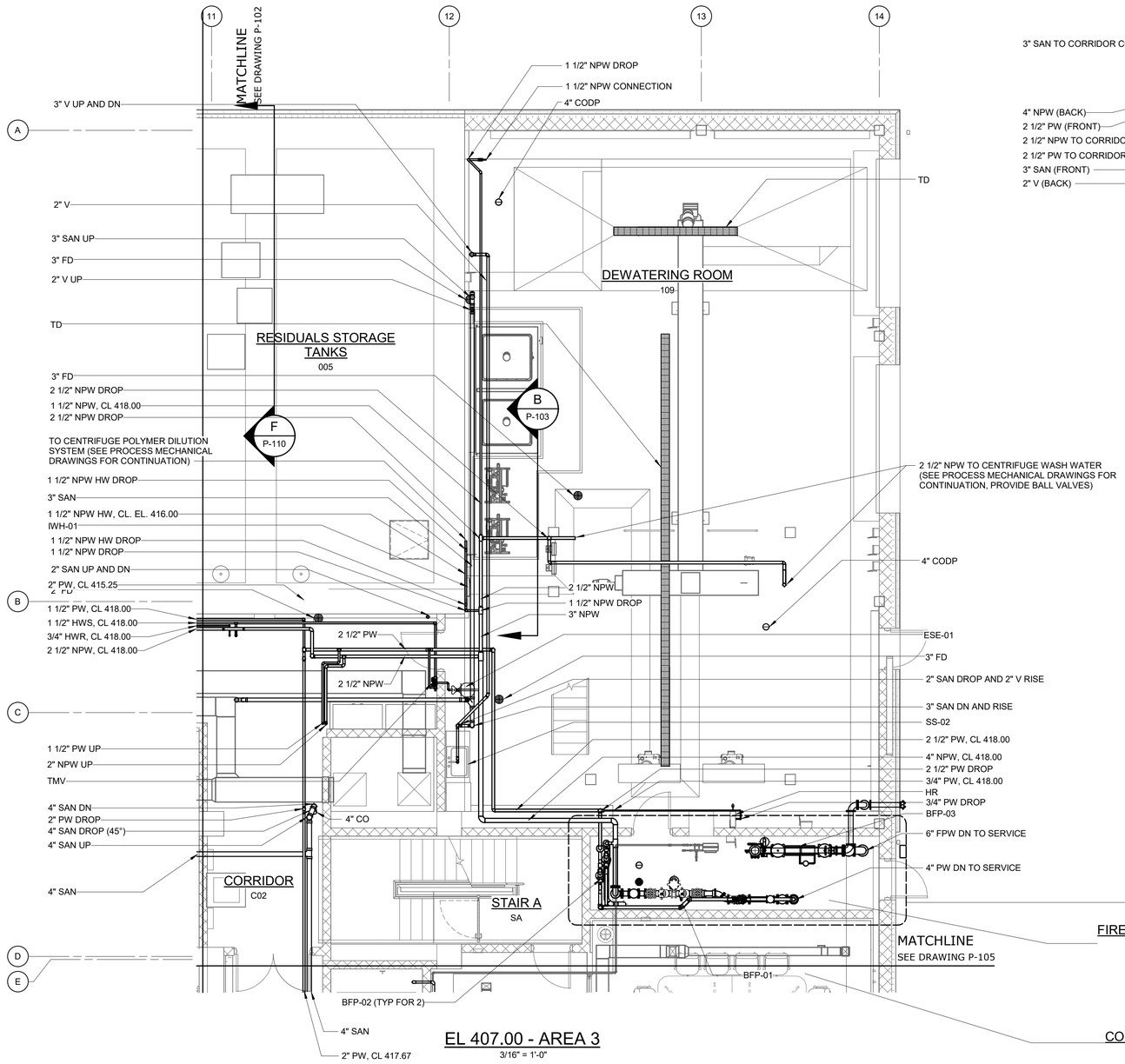

EL 407.00 - AREA 3

3/16" = 1'-0"

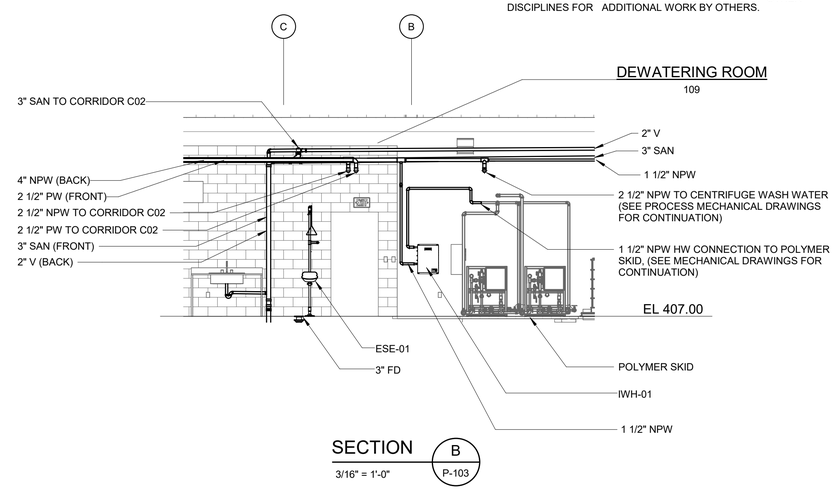

SECTION B P-103

3/16" = 1'-0"

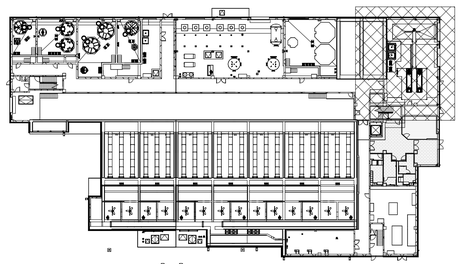

EL 407.00 - KEY PLAN

NTS

3/16" = 1'-0"

6 4 2 0 5'

WARNING
IT IS A VIOLATION OF SECTION 7209.2 OF THE NEW YORK STATE EDUCATION LAW FOR ANY PERSON, UNLESS ACTING UNDER THE DIRECTION OF A LICENSED PROFESSIONAL ENGINEER, TO ALTER IN ANY WAY PLANS, SPECIFICATIONS, PLATS OR REPORTS TO WHICH THE SEAL OF A PROFESSIONAL ENGINEER HAS BEEN APPLIED. IF AN ITEM BEARING THE SEAL OF A PROFESSIONAL ENGINEER IS ALTERED, THE ALTERING ENGINEER SHALL AFFIX TO THE ITEM HIS SEAL AND THE NOTATION "ALTERED BY" FOLLOWED BY HIS SIGNATURE, THE DATE, AND A SPECIFIC DESCRIPTION OF THE ALTERATION.

REV	ISSUED FOR	DATE	BY

PROJECT ENGINEER:	R. FROST
DESIGNED BY:	M. GIORDANO
DRAWN BY:	J. LURIE
CHECKED BY:	R. VAN DYKE

IF THIS BAR DOES NOT MEASURE 1" THEN DRAWING IS NOT TO FULL SCALE 0 1/2" 1"

BID SET

STATE OF NEW YORK MARC A. GIORDANO 099858 PROFESSIONAL ENGINEER

Hazen

HAZEN AND SAWYER
498 SEVENTH AVENUE, 11th FLOOR
NEW YORK, NEW YORK 10018

WESTCHESTER JOINT WATER WORKS
MAMARONECK, NY

RYE LAKE WATER FILTRATION PLANT
HARRISON, NY

FILTRATION PLANT
PLUMBING
EL. 407.00 - AREA 3

DATE:	FEB 2025
HAZEN NO.:	90388-000
CONTRACT NO.:	A1364-A
DRAWING NUMBER:	P-103

Autodesk Docs://90388-000_Rye_Lake_Filtration/90388-000-WFP-P.rvt
2/7/2025 2:28:22 PM

PLANT NORTH

NOTES:

1. THE WORK OF OTHER DISCIPLINES IS HIDDEN OR HALF-TONE FOR CLARITY. REFER TO CONTRACT DRAWINGS OF OTHER DISCIPLINES FOR ADDITIONAL WORK BY OTHERS.
2. SEE STRUCTURAL DETAIL S-05-0806.
3. CONNECT TO NEARBY STORM SEWER. COORDINATE WITH CIVIL FOR CONNECTION AND INVERT.

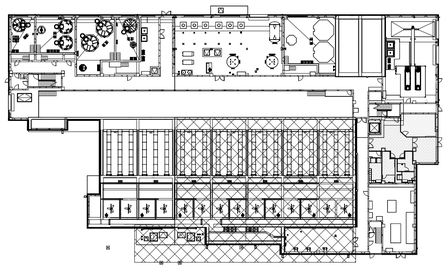

EL 407.00 - KEY PLAN
NTS

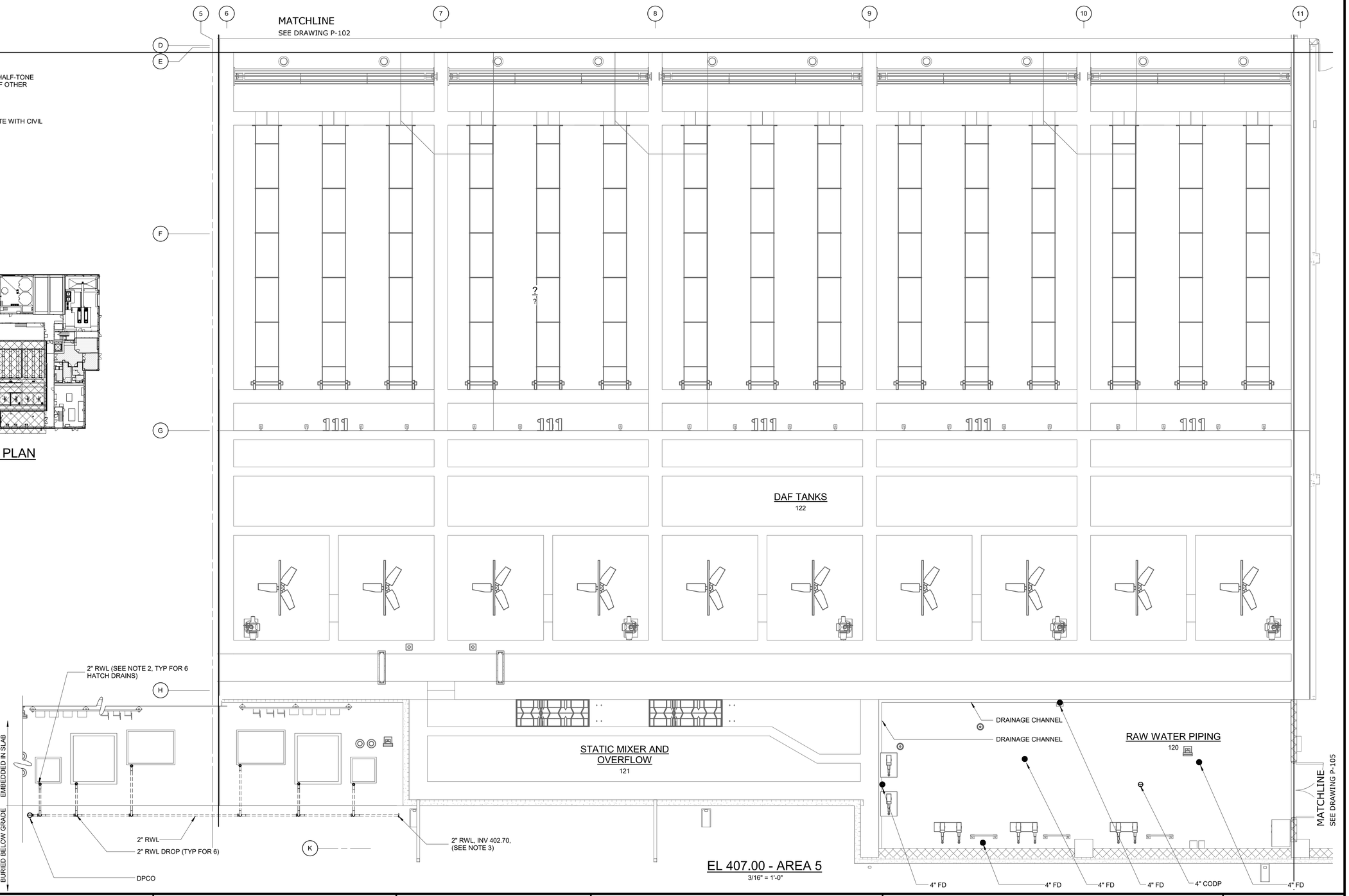

EL 407.00 - AREA 5
3/16" = 1'-0"

3/16" = 1'-0" 6 4 2 0 5'

WARNING
IT IS A VIOLATION OF SECTION 7209.2 OF THE NEW YORK STATE EDUCATION LAW FOR ANY PERSON, UNLESS ACTING UNDER THE DIRECTION OF A LICENSED PROFESSIONAL ENGINEER, TO ALTER IN ANY WAY PLANS, SPECIFICATIONS, PLATS OR REPORTS TO WHICH THE SEAL OF A PROFESSIONAL ENGINEER HAS BEEN AFFIXED. IF AN ITEM BEARING THE SEAL OF A PROFESSIONAL ENGINEER IS ALTERED, THE ALTERING ENGINEER SHALL AFFIX TO THE ITEM HIS SEAL AND THE NOTATION "ALTERED BY" FOLLOWED BY HIS SIGNATURE, THE DATE, AND A SPECIFIC DESCRIPTION OF THE ALTERATION.

REV	ISSUED FOR	DATE	BY

PROJECT ENGINEER:	R. FROST
DESIGNED BY:	M. GIORDANO
DRAWN BY:	J. LURIE
CHECKED BY:	R. VAN DYKE

IF THIS BAR DOES NOT MEASURE 1" THEN DRAWING IS NOT TO FULL SCALE 0 1/2" 1"

BID SET

MARIO A. GIORDANO — STATE OF NEW YORK — 099858 — LICENSED PROFESSIONAL ENGINEER

Hazen

HAZEN AND SAWYER
498 SEVENTH AVENUE, 11th FLOOR
NEW YORK, NEW YORK 10018

WESTCHESTER JOINT WATER WORKS
MAMARONECK, NY

RYE LAKE WATER FILTRATION PLANT
HARRISON, NY

FILTRATION PLANT
PLUMBING
EL. 407.00 - AREA 5

DATE:	FEB 2025
HAZEN NO.:	90388-000
CONTRACT NO.:	A1364-A
DRAWING NUMBER:	P-104

Autodesk Docs://90388-000_Rye_Lake_Filtration/90388-000-WFP-P.rvt
2/7/2025 2:28:27 PM

PLANT NORTH

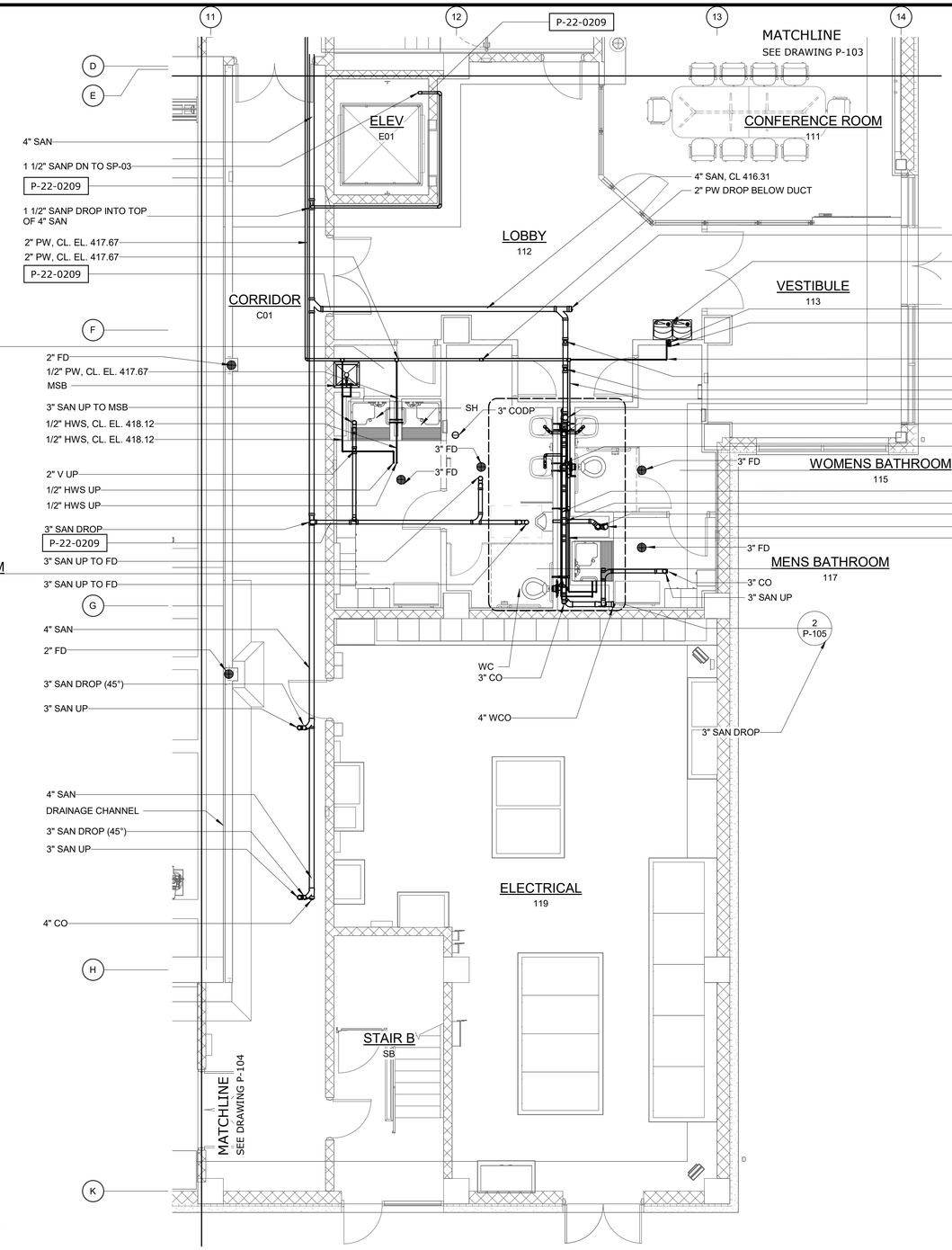

1 - EL 407.00 - AREA 6

3/16" = 1'-0"

P-004 H

P-004 F

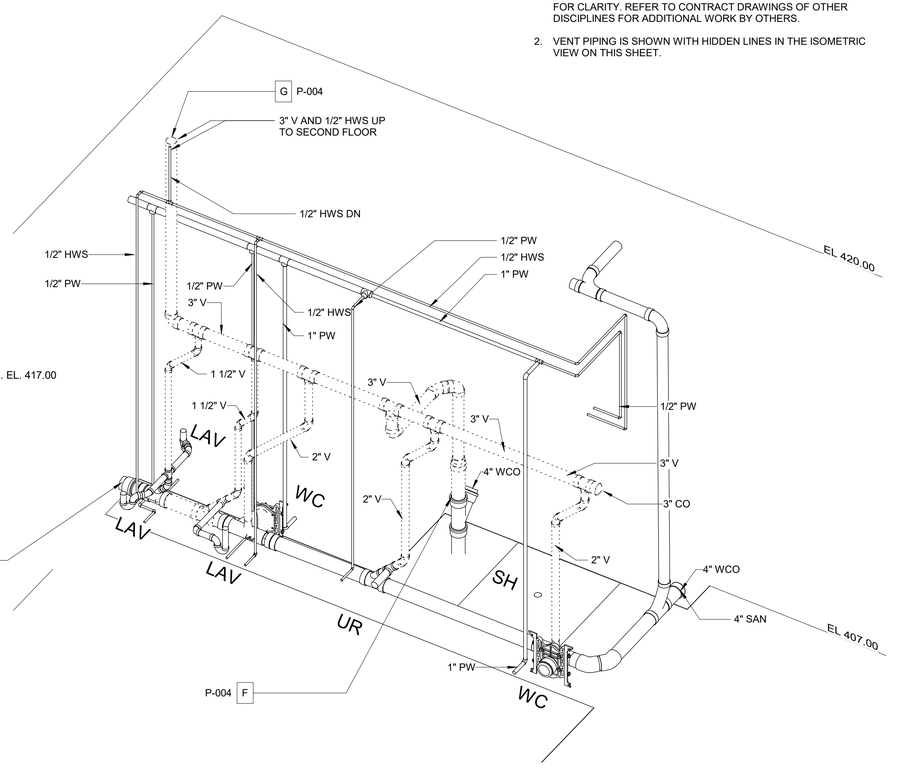

SEE NOTE 2

2 - FIRST FLOOR BATHROOM ISOMETRIC

NOTES:

1. THE WORK OF OTHER DISCIPLINES IS HIDDEN OR HALF-TONE FOR CLARITY. REFER TO CONTRACT DRAWINGS OF OTHER DISCIPLINES FOR ADDITIONAL WORK BY OTHERS.
2. VENT PIPING IS SHOWN WITH HIDDEN LINES IN THE ISOMETRIC VIEW ON THIS SHEET.

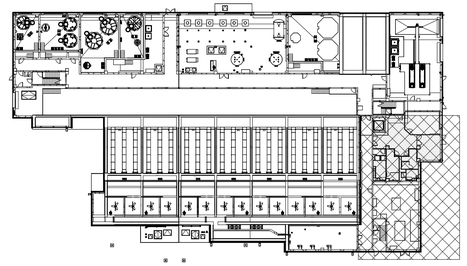

EL 407.00 - KEY PLAN

NTS

3/16" = 1'-0"

6 4 2 0 5'

WARNING
IT IS A VIOLATION OF SECTION 7209.2 OF THE NEW YORK STATE EDUCATION LAW FOR ANY PERSON, UNLESS ACTING UNDER THE DIRECTION OF A LICENSED PROFESSIONAL ENGINEER, TO ALTER IN ANY WAY PLANS, SPECIFICATIONS, PLATS OR REPORTS TO WHICH THE SEAL OF A PROFESSIONAL ENGINEER HAS BEEN APPLIED. IF AN ITEM BEARING THE SEAL OF A PROFESSIONAL ENGINEER IS ALTERED, THE ALTERING ENGINEER SHALL AFFIX TO THE ITEM HIS SEAL AND THE NOTATION "ALTERED BY" FOLLOWED BY HIS SIGNATURE, THE DATE, AND A SPECIFIC DESCRIPTION OF THE ALTERATION.

REV	ISSUED FOR	DATE	BY

PROJECT ENGINEER:	R. FROST
DESIGNED BY:	M. GIORDANO
DRAWN BY:	J. LURIE
CHECKED BY:	R. VAN DYKE

IF THIS BAR DOES NOT MEASURE 1" THEN DRAWING IS NOT TO FULL SCALE 0 1/2" 1"

BID SET

STATE OF NEW YORK MARC A. GIORDANO 099858 PROFESSIONAL ENGINEER

Hazen

HAZEN AND SAWYER
498 SEVENTH AVENUE, 11th FLOOR
NEW YORK, NEW YORK 10018

WESTCHESTER JOINT WATER WORKS
MAMARONECK, NY

RYE LAKE WATER FILTRATION PLANT
HARRISON, NY

FILTRATION PLANT
PLUMBING
EL. 407.00 - AREA 6

DATE:	FEB 2025
HAZEN NO.:	90388-000
CONTRACT NO.:	A1364-A
DRAWING NUMBER:	P-105

Autodesk Docs://90388-000_Rye_Lake_Filtration/90388-000-WFP-P.rvt
2/7/2025 2:28:33 PM

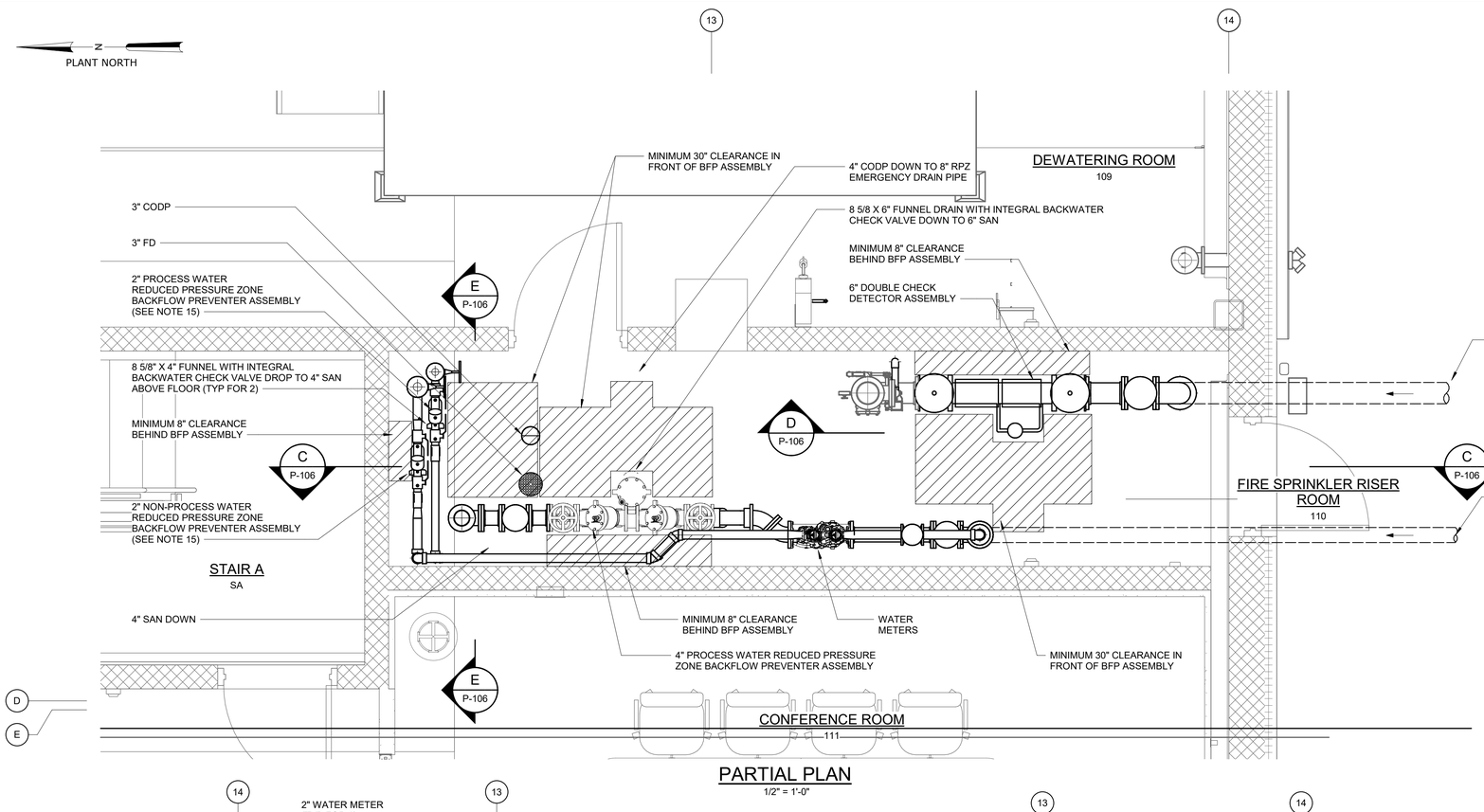

PARTIAL PLAN

1/2" = 1'-0"

NOTES:

1. THIS DRAWING PROVIDES A CONCEPTUAL BACKFLOW PREVENTION ARRANGEMENT AND ASSOCIATED DRAINAGE REQUIREMENTS FOR THE SUBJECT WATER SERVICE FOR THE PURPOSE OF DEMONSTRATING BACKFLOW PREVENTION CODE COMPLIANCE.THE CONTRACTOR IS RESPONSIBLE FOR THE PROPER ERECTION OF THE ACTUAL COMPLETE WORKING SYSTEM OF PIPING AND DEVICES PER ALL APPLICABLE CODES AND STANDARD PRACTICES.
2. ALL BACKFLOW PREVENTION DEVICES MUST BE FROM THE LIST OF APPROVED BACKFLOW PREVENTION ASSEMBLIES (BFPA) BY THE UNIVERSITY OF SOUTHERN CALIFORNIA FOUNDATION OF CROSS-CONNECTION CONTROL AND HYDRAULIC RESEARCH.
3. THE BFPA SHALL BE INSTALLED AS SHOWN ON THE APPROVED PLANS. THE INSTALLATION MUST BE IN CONFORMANCE WITH THE REQUIREMENTS OF NYSDOH, WESTCHESTER COUNTY DEPARTMENT OF HEALTH (WCDOH), WATER SUPPLIER AND LOCAL PLUMBING CODES. DEVIATIONS FROM THE APPROVED PLANS ARE NOT ALLOWED WITHOUT PERMISSION OF THE WATER SUPPLIER.
4. ADEQUATE SUPPORT FOR THE BFPA SHALL BE PROVIDED.
5. ALL BFPA'S SHALL BE INSPECTED AND TESTED ANNUALLY BY A NEW YORK STATE CERTIFIED BACKFLOW PREVENTER TESTER. ADDITIONALLY, AN INITIAL TEST OF THE DEVICE SHALL BE PERFORMED BY SUCH A TESTER PRIOR TO THE DEVICE BEING PLACED INTO SERVICE. NEW YORK STATE DEPARTMENT OF HEALTH (NYSDOH) FORM 1013 "REPORT ON TEST AND MAINTENANCE OF BACKFLOW PREVENTION DEVICE" SHALL BE COMPLETED IN ITS ENTIRETY AND ALL RESULTS SHALL BE FORWARDED TO THE WCDOH WITH COPIES TO OWNER, LOCAL WATER PROVIDER DESIGN ENGINEER, AND CERTIFIED TESTER. ATTENTION IS CALLED TO PART B OF NYSDOH 1013 WHICH SHALL BE SIGNED AND SEALED BY THE DESIGN ENGINEER, CERTIFYING THAT THE DEVICE HAS BEEN INSTALLED IN CONFORMANCE WITH THE WCDOH APPROVED PLANS.
6. IF BFP DEVICE IS GREATER THAN 5 FT. FROM THE WATER METER, ALL EXPOSED PIPING MUST BE MARKED "FEED LINE TO BACKFLOW PREVENTER - DO NOT TAP" AT 5 FT. INTERVALS.
7. ALL BACKFLOW PREVENTION DEVICES & TEST COCKS SHALL FACE FORWARD, WITH ADEQUATE ACCESS TO THE TEST COCKS TO FACILITATE TESTING AND MAINTENANCE.
8. THE FIRE SPRINKLER RISER ROOM SHALL BE PROVIDED WITH ADEQUATE HEAT TO PREVENT FREEZING AND ADEQUATE LIGHTING FOR TESTING AND MAINTENANCE.
9. BFPA'S SHALL BE A MINIMUM OF 8 IN. FROM WALLS.
10. BFPA'S SHALL BE A MINIMUM OF 30 IN. FROM FLOORS.
11. BFPA'S SHALL BE LEAD FREE AND USC APPROVED.
12. NO CHEMICALS ARE UTILIZED IN THE FIRE SUPPRESSION SYSTEM.
13. THE SITE (AND BFPA) ARE LOCATED OUTSIDE OF THE 100-YEAR FLOODPLAIN.
14. CONTRACTOR SHALL DRILL HOLE AND RUN WIRE FOR REMOTE READING SYSTEM IN ACCORDANCE WITH WJWW REQUIREMENTS.
15. THE 2" REDUCED PRESSURE ZONE BACKFLOW PREVENTION ASSEMBLIES FOR THE NON-PROCESS AND PROCESS WATER SYSTEMS ARE SHOWN FOR CLARITY AND ARE NOT INCLUDED IN THIS APPLICATION.
16. THE AIR GAP SHALL BE AT LEAST TWICE THE DIMENSION OF THE EFFECTIVE OPENING OF THE RELIEF PORT; BUT IN NO CASE LESS THAN 1 INCH.

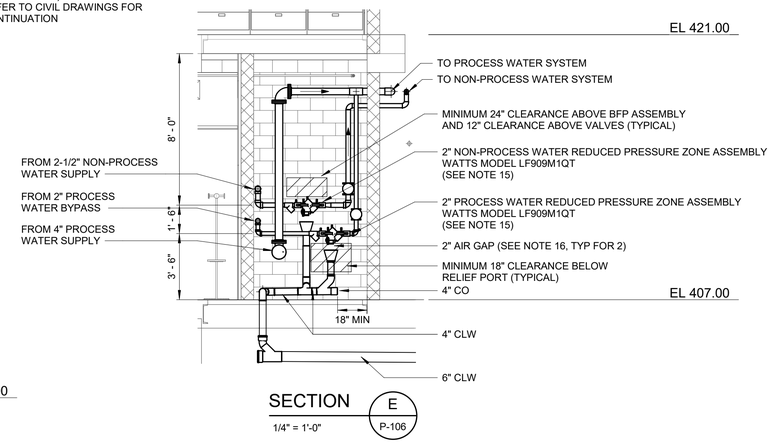

SECTION E

1/4" = 1'-0" — P-106

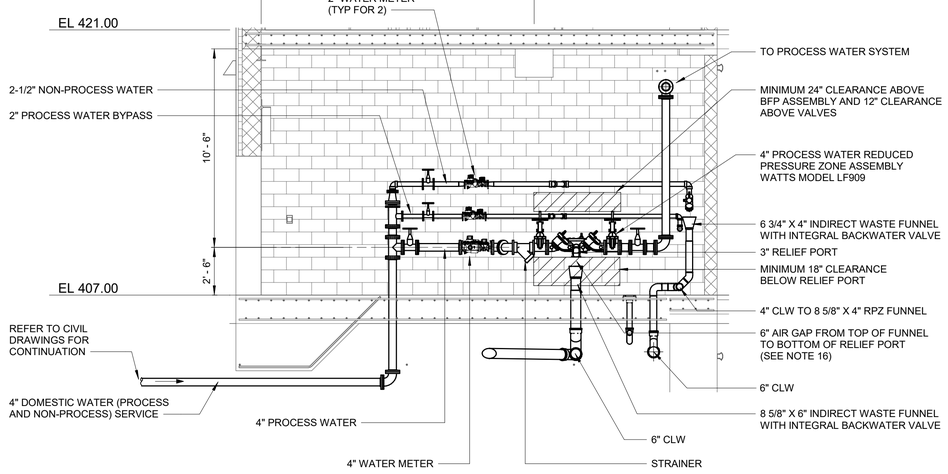

SECTION C

1/4" = 1'-0" — P-106

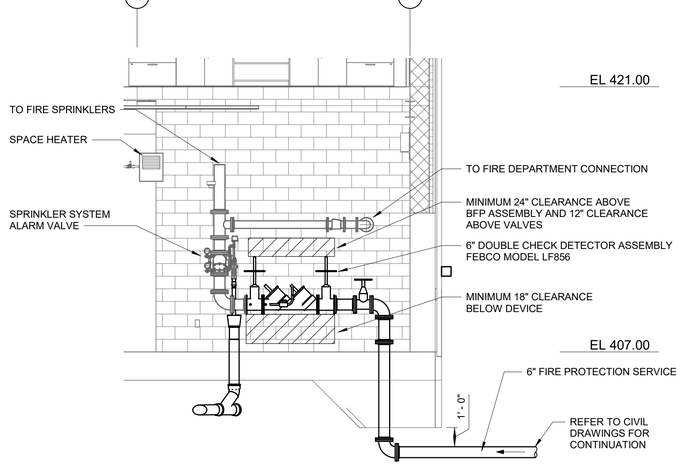

SECTION D

1/4" = 1'-0" — P-106

1/4" = 1'-0": 1 0 1 2 3 7'

1/2" = 1'-0": 12" 0 1 3'

WARNING
IT IS A VIOLATION OF SECTION 7209.2 OF THE NEW YORK STATE EDUCATION LAW FOR ANY PERSON, UNLESS ACTING UNDER THE DIRECTION OF A LICENSED PROFESSIONAL ENGINEER, TO ALTER IN ANY WAY PLANS, SPECIFICATIONS, PLATS OR REPORTS TO WHICH THE SEAL OF A PROFESSIONAL ENGINEER HAS BEEN APPLIED. IF AN ITEM BEARING THE SEAL OF A PROFESSIONAL ENGINEER IS ALTERED, THE ALTERING ENGINEER SHALL AFFIX TO THE ITEM HIS SEAL AND THE NOTATION "ALTERED BY" FOLLOWED BY HIS SIGNATURE, THE DATE, AND A SPECIFIC DESCRIPTION OF THE ALTERATION.

REV	ISSUED FOR	DATE	BY

PROJECT ENGINEER:	R. FROST
DESIGNED BY:	M. GIORDANO
DRAWN BY:	J. LURIE
CHECKED BY:	R. VAN DYKE

IF THIS BAR DOES NOT MEASURE 1" THEN DRAWING IS NOT TO FULL SCALE — 0 1/2" 1"

BID SET

STATE OF NEW YORK — MARC A. GIORDANO — 099868 — PROFESSIONAL ENGINEER

Hazen

HAZEN AND SAWYER
498 SEVENTH AVENUE, 11th FLOOR
NEW YORK, NEW YORK 10018

WESTCHESTER JOINT WATER WORKS
MAMARONECK, NY

RYE LAKE WATER FILTRATION PLANT
HARRISON, NY

FILTRATION PLANT
PLUMBING
BACKFLOW PREVENTION PLAN

DATE:	FEB 2025
HAZEN NO.:	90388-000
CONTRACT NO.:	A1364-A
DRAWING NUMBER:	P-106

Autodesk Docs://90388-000_Rye_Lake_Filtration/90388-000-WFP-P.rvt
2/7/2025 2:28:43 PM

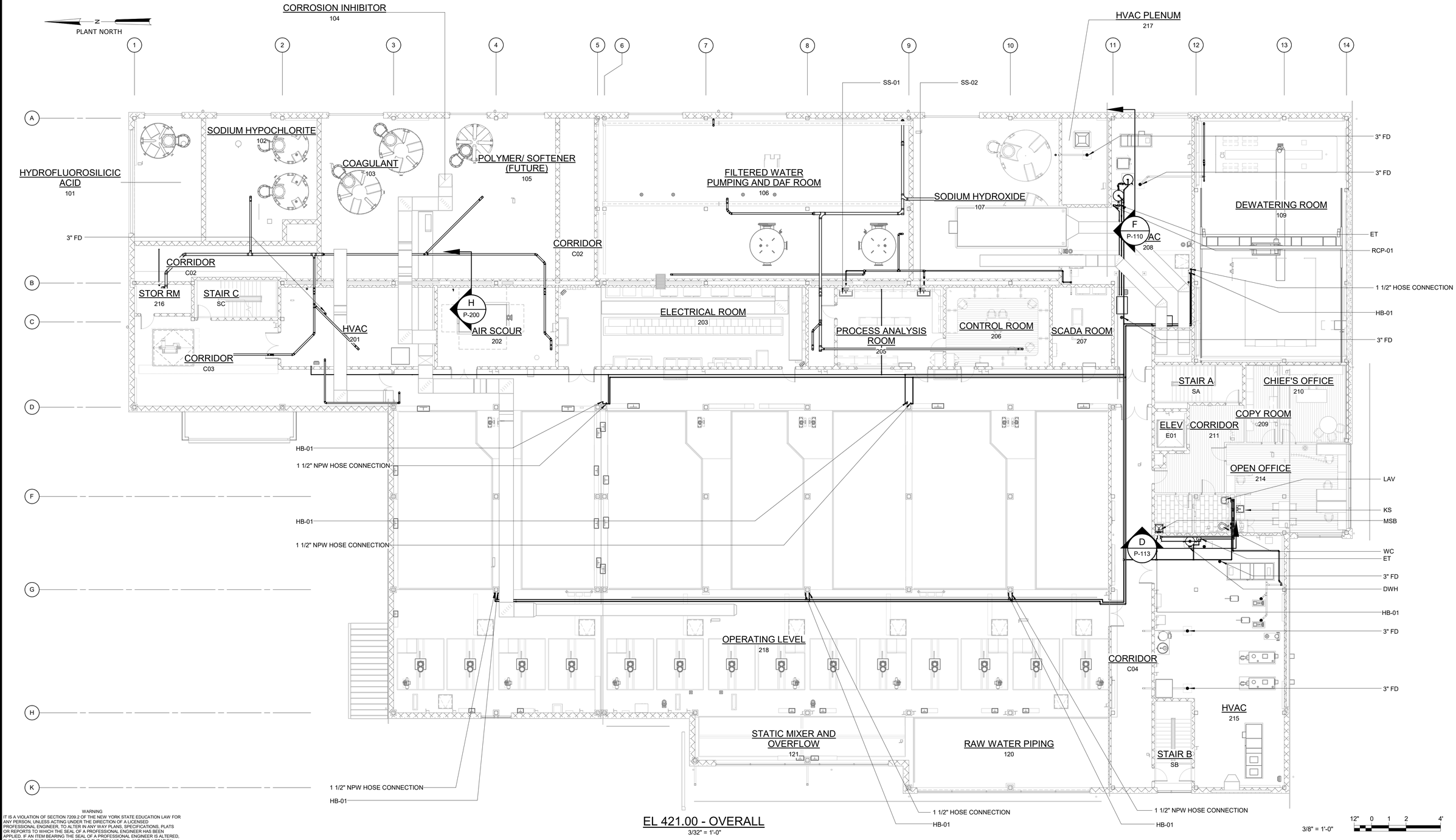

EL 421.00 - OVERALL

3/32" = 1'-0"

3/8" = 1'-0"

12" 0 1 2 4'

WARNING
IT IS A VIOLATION OF SECTION 7209.2 OF THE NEW YORK STATE EDUCATION LAW FOR ANY PERSON, UNLESS ACTING UNDER THE DIRECTION OF A LICENSED PROFESSIONAL ENGINEER, TO ALTER IN ANY WAY PLANS, SPECIFICATIONS, PLATS OR REPORTS TO WHICH THE SEAL OF A PROFESSIONAL ENGINEER HAS BEEN APPLIED. IF AN ITEM BEARING THE SEAL OF A PROFESSIONAL ENGINEER IS ALTERED, THE ALTERING ENGINEER SHALL AFFIX TO THE ITEM HIS SEAL AND THE NOTATION "ALTERED BY" FOLLOWED BY HIS SIGNATURE, THE DATE, AND A SPECIFIC DESCRIPTION OF THE ALTERATION.

REV	ISSUED FOR	DATE	BY

PROJECT ENGINEER:	R. FROST
DESIGNED BY:	M. GIORDANO
DRAWN BY:	J. LURIE
CHECKED BY:	M. GIORDANO
IF THIS BAR DOES NOT MEASURE 1" THEN DRAWING IS NOT TO FULL SCALE	0 1/2" 1"

BID SET

STATE OF NEW YORK · MARC A. GIORDANO · 099858 · LICENSED PROFESSIONAL ENGINEER

Hazen

HAZEN AND SAWYER
498 SEVENTH AVENUE, 11th FLOOR
NEW YORK, NEW YORK 10018

WESTCHESTER JOINT WATER WORKS
MAMARONECK, NY

RYE LAKE WATER FILTRATION PLANT
HARRISON, NY

FILTRATION PLANT
PLUMBING
SECOND FLOOR PLAN EL 421.00

DATE:	FEB 2025
HAZEN NO.:	90388-000
CONTRACT NO.:	A1364-A
DRAWING NUMBER:	P-107

Autodesk Docs://90388-000_Rye_Lake_Filtration/90388-000-WFP-P.rvt
2/7/2025 2:28:48 PM

PLANT NORTH

NOTES:

1. THE WORK OF OTHER DISCIPLINES IS HIDDEN OR HALF-TONE FOR CLARITY. REFER TO CONTRACT DRAWINGS OF OTHER DISCIPLINES FOR ADDITIONAL WORK BY OTHERS.
2. COORDINATE LOCATION OF FLOOR DRAIN WITH AIR SCOUR EQUIPMENT.
3. COORDINATE LOCATION OF FLOOR DRAIN WITH AIR HANDLING UNIT.
4. ALL HORIZONTAL STORM DRAIN PIPING SHALL BE SLOPED AT 1/8" PER FOOT.

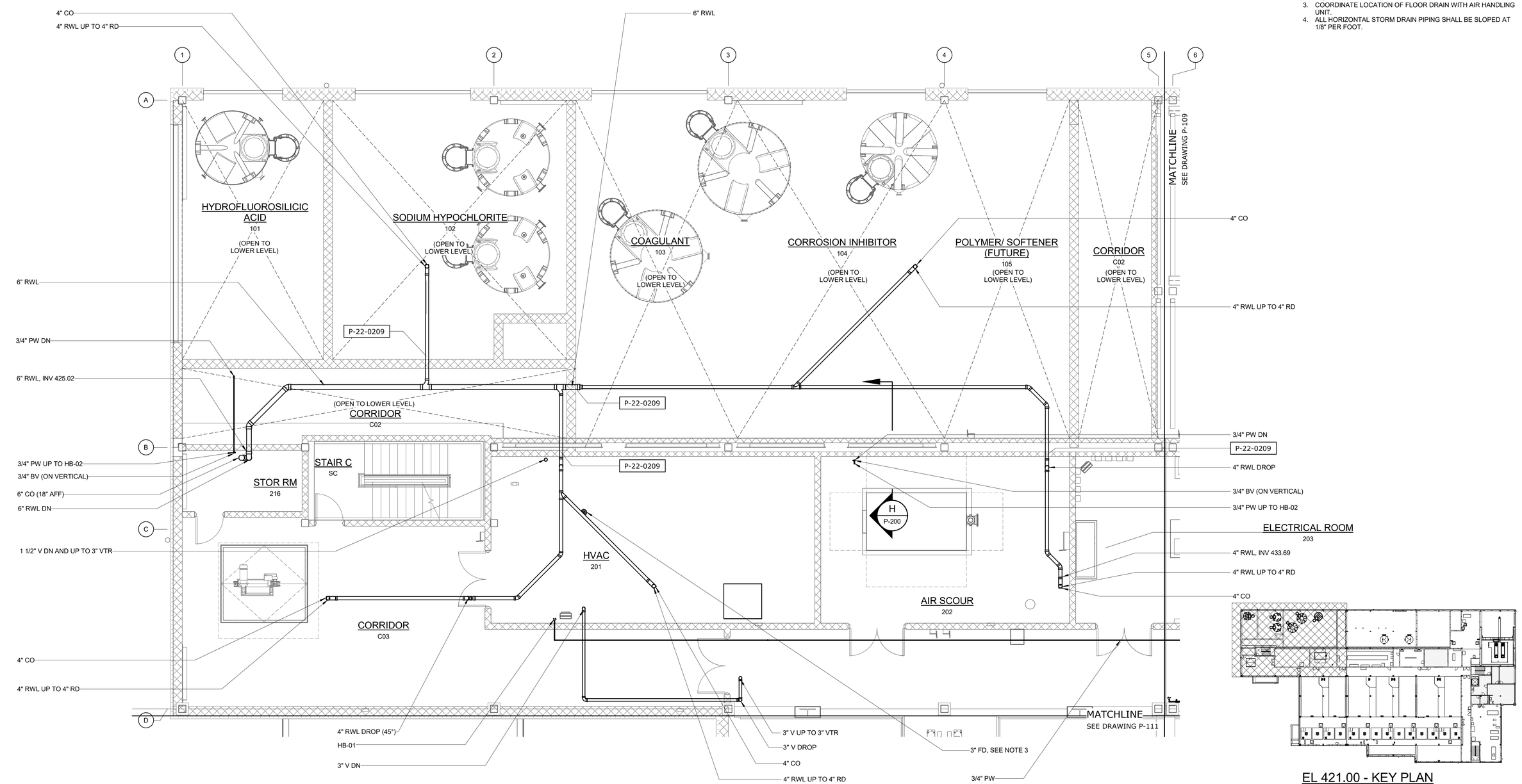

EL 421.00 - AREA 1

3/16" = 1'-0"

EL 421.00 - KEY PLAN

NTS

3/16" = 1'-0"

6 4 2 0 5'

WARNING
IT IS A VIOLATION OF SECTION 7209.2 OF THE NEW YORK STATE EDUCATION LAW FOR ANY PERSON, UNLESS ACTING UNDER THE DIRECTION OF A LICENSED PROFESSIONAL ENGINEER, TO ALTER IN ANY WAY PLANS, SPECIFICATIONS, PLATS OR REPORTS TO WHICH THE SEAL OF A PROFESSIONAL ENGINEER HAS BEEN APPLIED. IF AN ITEM BEARING THE SEAL OF A PROFESSIONAL ENGINEER IS ALTERED, THE ALTERING ENGINEER SHALL AFFIX TO THE ITEM HIS SEAL AND THE NOTATION "ALTERED BY" FOLLOWED BY HIS SIGNATURE, THE DATE, AND A SPECIFIC DESCRIPTION OF THE ALTERATION.

REV	ISSUED FOR	DATE	BY

PROJECT ENGINEER:	R. FROST
DESIGNED BY:	M. GIORDANO
DRAWN BY:	J. LURIE
CHECKED BY:	R. VAN DYKE
IF THIS BAR DOES NOT MEASURE 1" THEN DRAWING IS NOT TO FULL SCALE	0 1/2" 1"

BID SET

STATE OF NEW YORK · MARC A. GIORDANO · 099858 · LICENSED PROFESSIONAL ENGINEER

Hazen

HAZEN AND SAWYER
498 SEVENTH AVENUE, 11th FLOOR
NEW YORK, NEW YORK 10018

WESTCHESTER JOINT WATER WORKS
MAMARONECK, NY

RYE LAKE WATER FILTRATION PLANT
HARRISON, NY

FILTRATION PLANT
PLUMBING
EL. 421.00 - AREA 1

DATE:	FEB 2025
HAZEN NO.:	90388-000
CONTRACT NO.:	A1364-A
DRAWING NUMBER:	P-108

Autodesk Docs://90388-000_Rye_Lake_Filtration/90388-000-WFP-P.rvt
2/7/2025 2:28:53 PM

PLANT NORTH

NOTES:

1. THE WORK OF OTHER DISCIPLINES IS HIDDEN OR HALF-TONE FOR CLARITY. REFER TO CONTRACT DRAWINGS OF OTHER DISCIPLINES FOR ADDITIONAL WORK BY OTHERS.
2. COORDINATE PIPE ROUTING WITH BRIDGE CRANE TRAVEL PATH. ANY PIPING OR ASSOCIATED APPURTENANCES IN THIS CONTRACT DAMAGED BY THE BRIDGE CRANE SHALL BE REPLACED BY THE CONTRACTOR AT NO ADDITIONAL COST TO THE OWNER (EXCLUDING FUTURE MODIFICATIONS OUTSIDE THE SCOPE OF THIS CONTRACT).
3. SEE STRUCTURAL DETAIL S-05-0806. PROVIDE EMBEDDED 2" P-TRAP.
4. ALL HORIZONTAL STORM DRAIN PIPING SHALL BE SLOPED AT 1/8" PER FOOT.
5. COORDINATE PIPING INSTALLATION WITH ARCHITECTURAL CASEWORK.

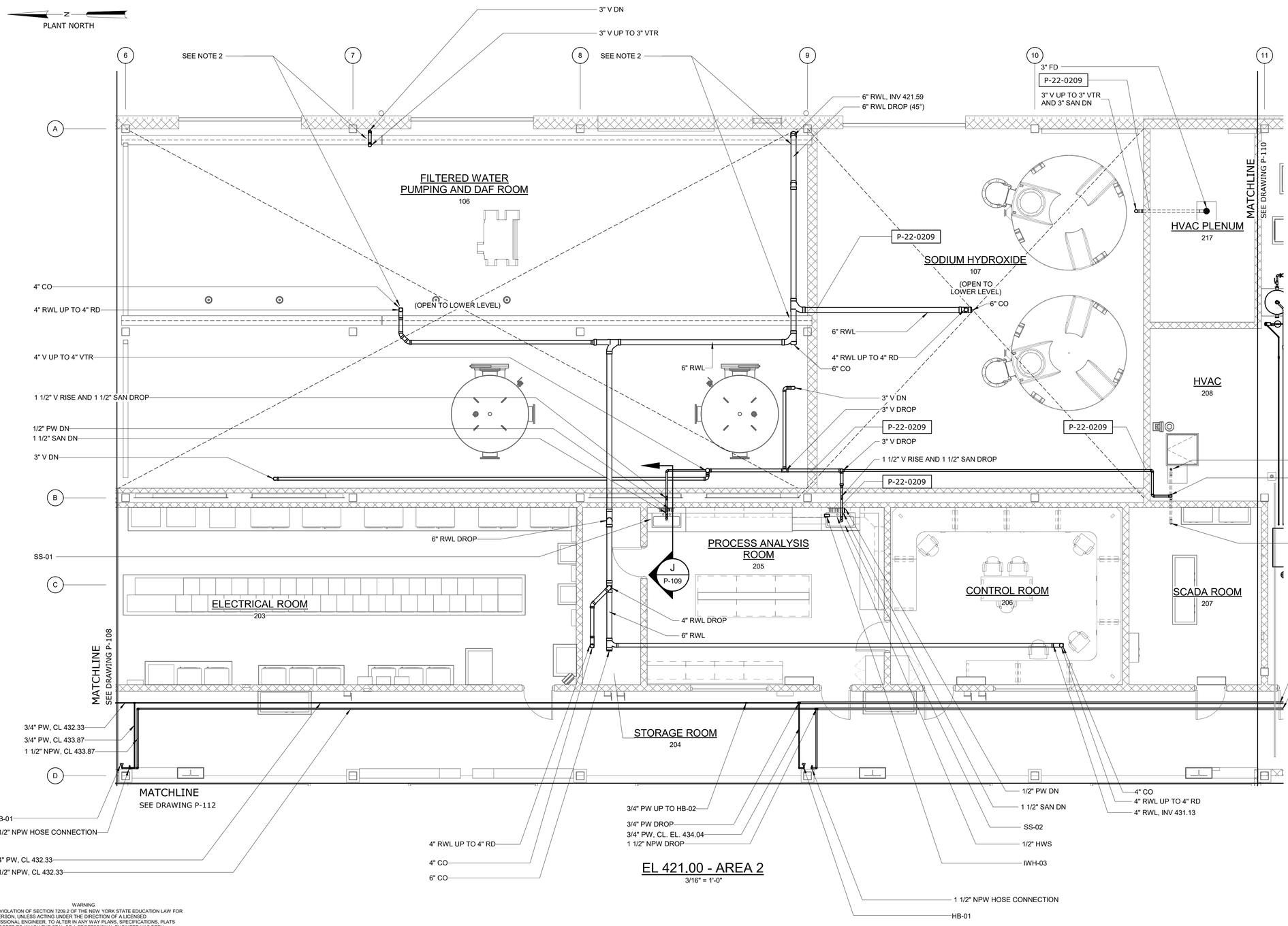

EL 421.00 - AREA 2

3/16" = 1'-0"

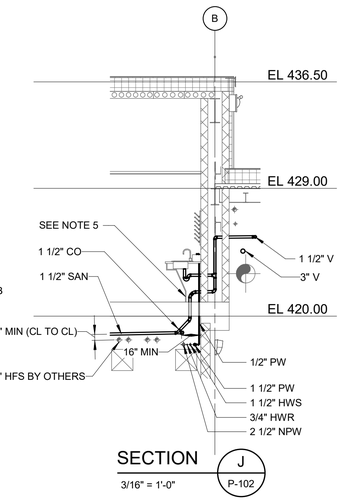

SECTION

3/16" = 1'-0"

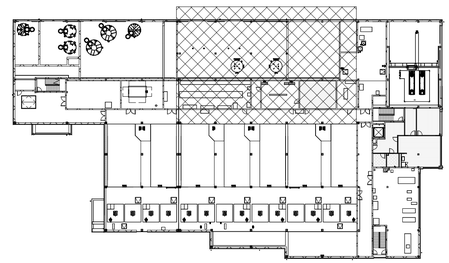

EL 421.00 - KEY PLAN

NTS

3/16" = 1'-0" 6 4 2 0 5'

WARNING
IT IS A VIOLATION OF SECTION 7209.2 OF THE NEW YORK STATE EDUCATION LAW FOR ANY PERSON, UNLESS ACTING UNDER THE DIRECTION OF A LICENSED PROFESSIONAL ENGINEER, TO ALTER IN ANY WAY PLANS, SPECIFICATIONS, PLATS OR REPORTS TO WHICH THE SEAL OF A PROFESSIONAL ENGINEER HAS BEEN APPLIED. IF AN ITEM BEARING THE SEAL OF A PROFESSIONAL ENGINEER IS ALTERED, THE ALTERING ENGINEER SHALL AFFIX TO THE ITEM HIS SEAL AND THE NOTATION "ALTERED BY" FOLLOWED BY HIS SIGNATURE, THE DATE, AND A SPECIFIC DESCRIPTION OF THE ALTERATION.

REV	ISSUED FOR	DATE	BY

PROJECT ENGINEER:	R. FROST
DESIGNED BY:	M. GIORDANO
DRAWN BY:	J. LURIE
CHECKED BY:	R. VAN DYKE
IF THIS BAR DOES NOT MEASURE 1" THEN DRAWING IS NOT TO FULL SCALE	0 1/2" 1"

BID SET

STATE OF NEW YORK · MARC A. GIORDANO · 099868 · PROFESSIONAL ENGINEER

Hazen

HAZEN AND SAWYER
498 SEVENTH AVENUE, 11th FLOOR
NEW YORK, NEW YORK 10018

WESTCHESTER JOINT WATER WORKS
MAMARONECK, NY

RYE LAKE WATER FILTRATION PLANT
HARRISON, NY

FILTRATION PLANT
PLUMBING
EL. 421.00 - AREA 2

DATE:	FEB 2025
HAZEN NO.:	90388-000
CONTRACT NO.:	A1364-A
DRAWING NUMBER:	P-109

Autodesk Docs://90388-000_Rye_Lake_Filtration/90388-000-WFP-P.rvt
2/7/2025 2:28:59 PM

PLANT NORTH

NOTES:

1. THE WORK OF OTHER DISCIPLINES IS HIDDEN OR HALF-TONE FOR CLARITY. REFER TO CONTRACT DRAWINGS OF OTHER DISCIPLINES FOR ADDITIONAL WORK BY OTHERS.
2. DRAINAGE PIPING IN HVAC ROOMS (208 AND 215) SHALL BE EMBEDDED IN SLAB.
3. SEE STRUCTURAL DETAIL S-05-0806. PROVIDE EMBEDDED 2" P-TRAP.
4. COORDINATE FLOOR DRAIN LOCATION WITH ASSOCIATED EQUIPMENT DRAIN.

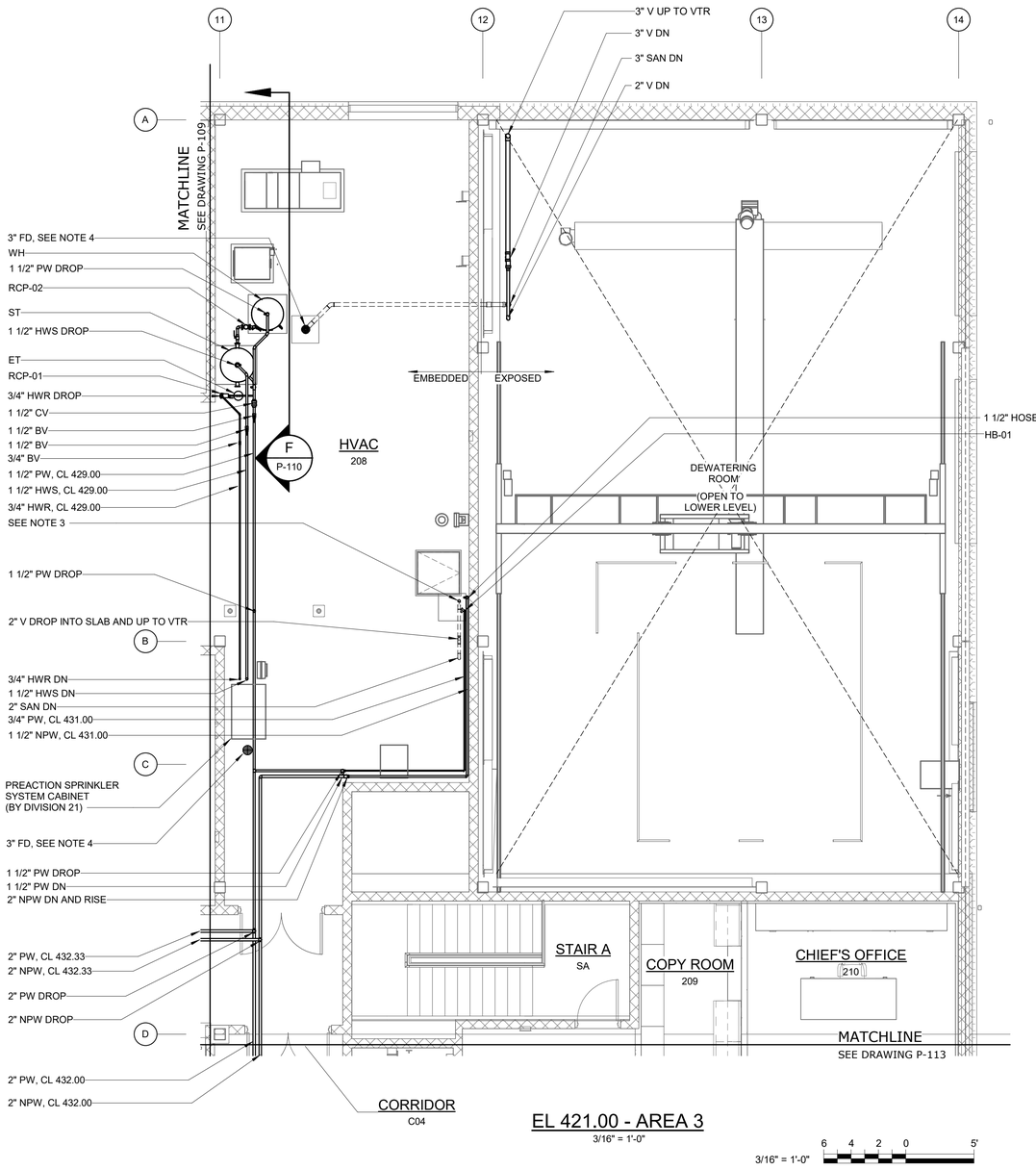

EL 421.00 - AREA 3

3/16" = 1'-0"

3/16" = 1'-0"

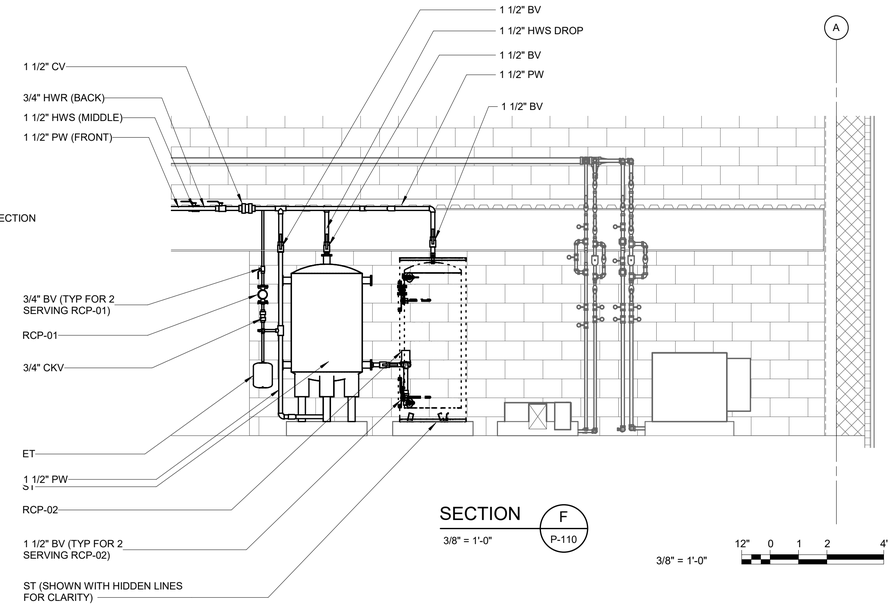

SECTION F P-110

3/8" = 1'-0"

3/8" = 1'-0"

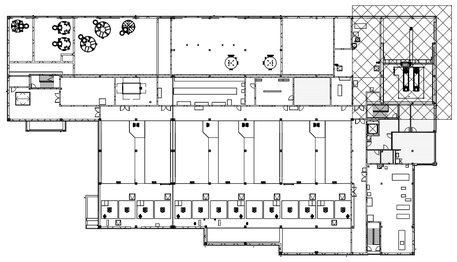

EL 421.00 - KEY PLAN

NTS

WARNING
IT IS A VIOLATION OF SECTION 7209.2 OF THE NEW YORK STATE EDUCATION LAW FOR ANY PERSON, UNLESS ACTING UNDER THE DIRECTION OF A LICENSED PROFESSIONAL ENGINEER, TO ALTER IN ANY WAY PLANS, SPECIFICATIONS, PLATS OR REPORTS TO WHICH THE SEAL OF A PROFESSIONAL ENGINEER HAS BEEN APPLIED. IF AN ITEM BEARING THE SEAL OF A PROFESSIONAL ENGINEER IS ALTERED, THE ALTERING ENGINEER SHALL AFFIX TO THE ITEM HIS SEAL AND THE NOTATION "ALTERED BY" FOLLOWED BY HIS SIGNATURE, THE DATE, AND A SPECIFIC DESCRIPTION OF THE ALTERATION.

REV	ISSUED FOR	DATE	BY

PROJECT ENGINEER:	R. FROST
DESIGNED BY:	M. GIORDANO
DRAWN BY:	J. LURIE
CHECKED BY:	R. VAN DYKE

IF THIS BAR DOES NOT MEASURE 1" THEN DRAWING IS NOT TO FULL SCALE 0 1/2" 1"

BID SET

MARC A. GIORDANO — STATE OF NEW YORK — 099868 — LICENSED PROFESSIONAL ENGINEER

Hazen

HAZEN AND SAWYER
498 SEVENTH AVENUE, 11th FLOOR
NEW YORK, NEW YORK 10018

WESTCHESTER JOINT WATER WORKS
MAMARONECK, NY

RYE LAKE WATER FILTRATION PLANT
HARRISON, NY

FILTRATION PLANT
PLUMBING
EL. 421.00 - AREA 3

DATE:	FEB 2025
HAZEN NO.:	90388-000
CONTRACT NO.:	A1364-A
DRAWING NUMBER:	P-110

Autodesk Docs://90388-000_Rye_Lake_Filtration/90388-000-WFP-P.rvt
2/7/2025 2:29:06 PM

PLANT NORTH

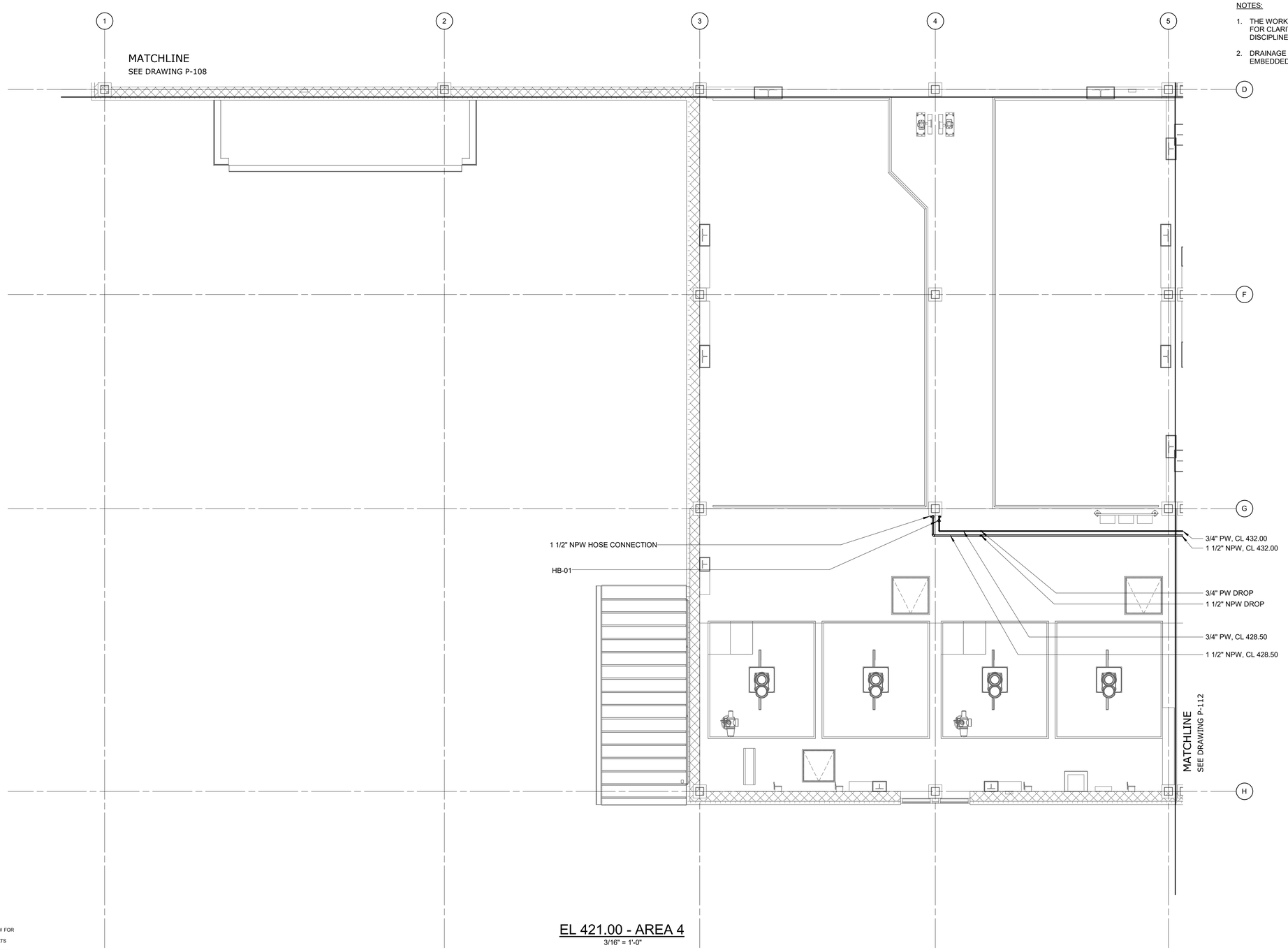

NOTES:

1. THE WORK OF OTHER DISCIPLINES IS HIDDEN OR HALF-TONE FOR CLARITY. REFER TO CONTRACT DRAWINGS OF OTHER DISCIPLINES FOR ADDITIONAL WORK BY OTHERS.
2. DRAINAGE PIPING IN HVAC ROOMS (208 AND 215) SHALL BE EMBEDDED IN SLAB

EL 421.00 - AREA 4
3/16" = 1'-0"

3/16" = 1'-0" 6 4 2 0 5'

WARNING
IT IS A VIOLATION OF SECTION 7209.2 OF THE NEW YORK STATE EDUCATION LAW FOR ANY PERSON, UNLESS ACTING UNDER THE DIRECTION OF A LICENSED PROFESSIONAL ENGINEER, TO ALTER IN ANY WAY PLANS, SPECIFICATIONS, PLATS OR REPORTS TO WHICH THE SEAL OF A PROFESSIONAL ENGINEER HAS BEEN APPLIED. IF AN ITEM BEARING THE SEAL OF A PROFESSIONAL ENGINEER IS ALTERED, THE ALTERING ENGINEER SHALL AFFIX TO THE ITEM HIS SEAL AND THE NOTATION "ALTERED BY" FOLLOWED BY HIS SIGNATURE, THE DATE, AND A SPECIFIC DESCRIPTION OF THE ALTERATION.

REV	ISSUED FOR	DATE	BY

PROJECT ENGINEER:	R. FROST
DESIGNED BY:	M. GIORDANO
DRAWN BY:	J. LURIE
CHECKED BY:	R. VAN DYKE

IF THIS BAR DOES NOT MEASURE 1" THEN DRAWING IS NOT TO FULL SCALE 0 1/2" 1"

BID SET

MARC A. GIORDANO — STATE OF NEW YORK — 099858 — PROFESSIONAL ENGINEER

Hazen

HAZEN AND SAWYER
498 SEVENTH AVENUE, 11th FLOOR
NEW YORK, NEW YORK 10018

WESTCHESTER JOINT WATER WORKS
MAMARONECK, NY

RYE LAKE WATER FILTRATION PLANT
HARRISON, NY

FILTRATION PLANT
PLUMBING
EL. 421.00 - AREA 4

DATE:	FEB 2025
HAZEN NO.:	90388-000
CONTRACT NO.:	A1364-A
DRAWING NUMBER:	P-111

Autodesk Docs://90388-000_Rye_Lake_ Filtration/90388-000-WFP-P.rvt
2/7/2025 2:29:07 PM

PLANT NORTH

MATCHLINE
SEE DRAWING P-109

MATCHLINE
SEE DRAWING P-111

MATCHLINE
SEE DRAWING P-113

1 1/2" HOSE CONNECTION

HB-01

3/4" PW, CL 432.00

1 1/2" NPW, CL 432.00

1" PW, CL. EL. 432.00

2" NPW, CL 432.00

HB-01

1 1/2" NPW HOSE CONNECTION

1" PW, CL 432.00

2" NPW, CL 432.00

OPERATING LEVEL
218

CORRIDOR
C04

STATIC MIXER AND OVERFLOW
121

RAW WATER PIPING (OPEN TO LOWER LEVEL)

EL 421.00 - AREA 5
3/16" = 1'-0"

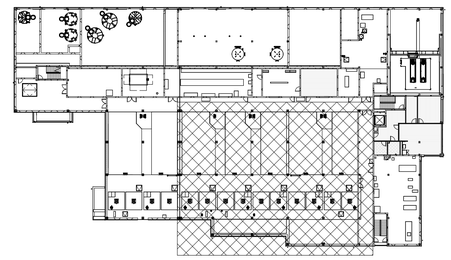

EL 421.00 - KEY PLAN
NTS

3/16" = 1'-0"

NOTES:

1. THE WORK OF OTHER DISCIPLINES IS HIDDEN OR HALF-TONE FOR CLARITY. REFER TO CONTRACT DRAWINGS OF OTHER DISCIPLINES FOR ADDITIONAL WORK BY OTHERS.

WARNING
IT IS A VIOLATION OF SECTION 7209.2 OF THE NEW YORK STATE EDUCATION LAW FOR ANY PERSON, UNLESS ACTING UNDER THE DIRECTION OF A LICENSED PROFESSIONAL ENGINEER, TO ALTER IN ANY WAY PLANS, SPECIFICATIONS, PLATS OR REPORTS TO WHICH THE SEAL OF A PROFESSIONAL ENGINEER HAS BEEN AFFIXED. IF AN ITEM BEARING THE SEAL OF A PROFESSIONAL ENGINEER IS ALTERED, THE ALTERING ENGINEER SHALL AFFIX TO THE ITEM HIS SEAL AND THE NOTATION "ALTERED BY" FOLLOWED BY HIS SIGNATURE, THE DATE, AND A SPECIFIC DESCRIPTION OF THE ALTERATION.

REV	ISSUED FOR	DATE	BY

PROJECT ENGINEER:	R. FROST
DESIGNED BY:	M. GIORDANO
DRAWN BY:	J. LURIE
CHECKED BY:	R. VAN DYKE
IF THIS BAR DOES NOT MEASURE 1" THEN DRAWING IS NOT TO FULL SCALE	0 1/2" 1"

BID SET

MARC A. GIORDANO — STATE OF NEW YORK — 099858 — LICENSED PROFESSIONAL ENGINEER

Hazen
HAZEN AND SAWYER
498 SEVENTH AVENUE, 11th FLOOR
NEW YORK, NEW YORK 10018

WESTCHESTER JOINT WATER WORKS
MAMARONECK, NY

RYE LAKE WATER FILTRATION PLANT
HARRISON, NY

FILTRATION PLANT
PLUMBING
EL. 421.00 - AREA 5

DATE:	FEB 2025
HAZEN NO.:	90388-000
CONTRACT NO.:	A1364-A
DRAWING NUMBER:	P-112

Autodesk Docs://90388-000_Rye_Lake_Filtration/90388-000-WFP-P.rvt
2/7/2025 2:29:10 PM

PLANT NORTH

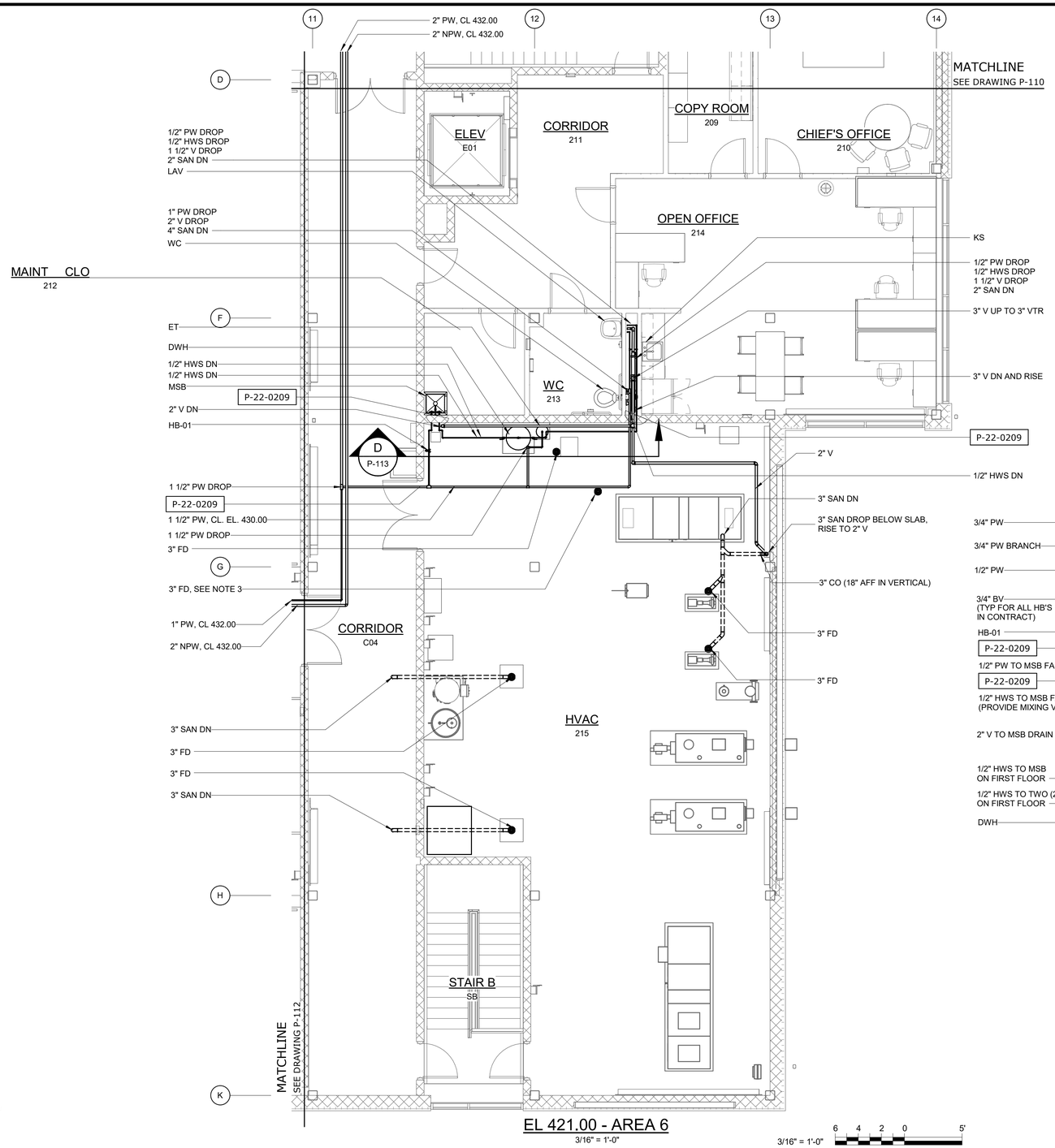

EL 421.00 - AREA 6

3/16" = 1'-0"

3/16" = 1'-0"

6 4 2 0 5'

NOTES:

1. THE WORK OF OTHER DISCIPLINES IS HIDDEN OR HALF-TONE FOR CLARITY. REFER TO CONTRACT DRAWINGS OF OTHER DISCIPLINES FOR ADDITIONAL WORK BY OTHERS.
2. DRAINAGE PIPING IN HVAC ROOMS (208 AND 215) SHALL BE EMBEDDED IN SLAB.
3. COORDINATE FLOOR DRAIN LOCATION WITH ASSOCIATED EQUIPMENT DRAIN.

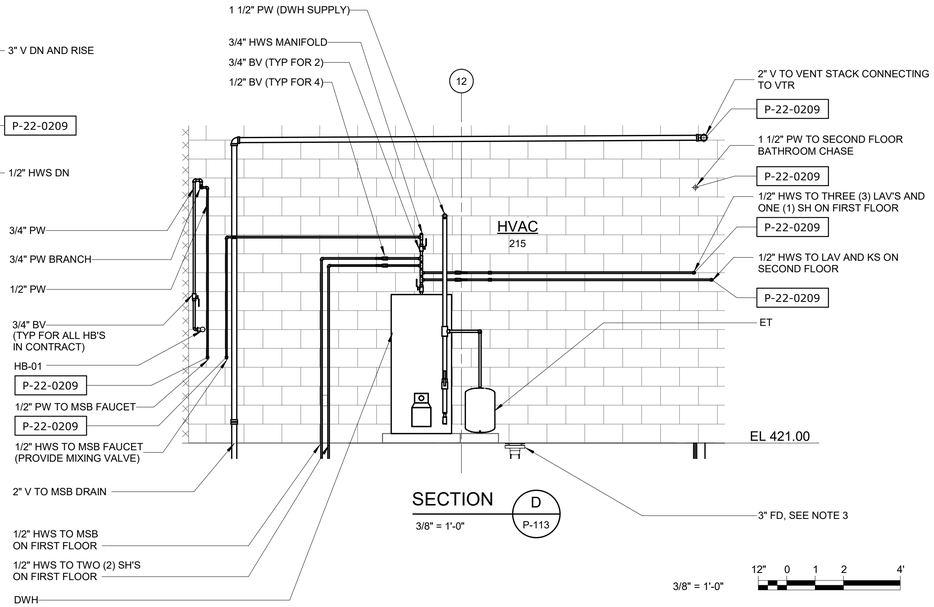

SECTION D P-113

3/8" = 1'-0"

3/8" = 1'-0" 12" 0 1 2 4'

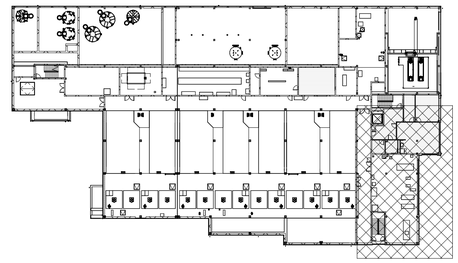

EL 421.00 - KEY PLAN

NTS

WARNING
IT IS A VIOLATION OF SECTION 7209.2 OF THE NEW YORK STATE EDUCATION LAW FOR ANY PERSON, UNLESS ACTING UNDER THE DIRECTION OF A LICENSED PROFESSIONAL ENGINEER, TO ALTER IN ANY WAY PLANS, SPECIFICATIONS, PLATS OR REPORTS TO WHICH THE SEAL OF A PROFESSIONAL ENGINEER HAS BEEN APPLIED. IF AN ITEM BEARING THE SEAL OF A PROFESSIONAL ENGINEER IS ALTERED, THE ALTERING ENGINEER SHALL AFFIX TO THE ITEM HIS SEAL AND THE NOTATION "ALTERED BY" FOLLOWED BY HIS SIGNATURE, THE DATE, AND A SPECIFIC DESCRIPTION OF THE ALTERATION.

REV	ISSUED FOR	DATE	BY

PROJECT ENGINEER:	R. FROST
DESIGNED BY:	M. GIORDANO
DRAWN BY:	J. LURIE
CHECKED BY:	R. VAN DYKE

IF THIS BAR DOES NOT MEASURE 1" THEN DRAWING IS NOT TO FULL SCALE 0 1/2" 1"

BID SET

MARC A. GIORDANO — STATE OF NEW YORK — 099858 — PROFESSIONAL ENGINEER

Hazen
HAZEN AND SAWYER
498 SEVENTH AVENUE, 11th FLOOR
NEW YORK, NEW YORK 10018

WESTCHESTER JOINT WATER WORKS
MAMARONECK, NY

RYE LAKE WATER FILTRATION PLANT
HARRISON, NY

FILTRATION PLANT
PLUMBING
EL. 421.00 - AREA 6

DATE:	FEB 2025
HAZEN NO.:	90388-000
CONTRACT NO.:	A1364-A
DRAWING NUMBER:	P-113

Autodesk Docs://90388-000_Rye_Lake_Filtration/90388-000-WFP-P.rvt
2/7/2025 2:29:15 PM

PLANT NORTH

DRAINAGE AREA 1A
2340 SF TOTAL DRAINAGE AREA
2120 SF HORIZONTAL AREA
450 SF VERTICAL AREA

DRAINAGE AREA 1B
1210 SF TOTAL DRAINAGE AREA
1140 SF HORIZONTAL AREA
130 SF VERTICAL AREA

DRAINAGE AREA 2B
1290 SF TOTAL DRAINAGE AREA
1200 SF HORIZONTAL AREA
170 SF VERTICAL AREA

DRAINAGE AREA 3A
2260 SF TOTAL DRAINAGE AREA
2080 SF HORIZONTAL AREA
350 SF VERTICAL AREA

DRAINAGE AREA 4B
1070 SF TOTAL DRAINAGE AREA
950 SF HORIZONTAL AREA
230 SF VERTICAL AREA

DRAINAGE AREA 6A
2430 SF TOTAL DRAINAGE AREA
2240 SF HORIZONTAL AREA
380 SF VERTICAL AREA

DRAINAGE AREA 6B
2150 SF TOTAL DRAINAGE AREA
1910 SF HORIZONTAL AREA
470 SF VERTICAL AREA

DRAINAGE AREA 9B
2450 SF TOTAL DRAINAGE AREA
2200 SF HORIZONTAL AREA
500 SF VERTICAL AREA

DRAINAGE AREA 9A
3730 SF TOTAL DRAINAGE AREA
3430 SF HORIZONTAL AREA
600 SF VERTICAL AREA

3" VTR
3/4" PW (BELOW UPPER ROOF DECK)
P-22-0209
3/4" PW DN
HB-02
3" VTR
3/4" PW (BELOW ROOF DECK)
4" VTR
3/4" PW DN
HB-02
3" VTR
3" VTR
3" VTR
3" VTR

55' - 3" | 54' - 4" | 58' - 5" | 56' - 8" | 30' - 5" | 3' - 0"

38' - 4" | 31' - 4"

6' - 0" ARCHITECTURAL WALL
6' - 6" ARCHITECTURAL WALL
10' - 6" ARCHITECTURAL WALL
6' - 6" ARCHITECTURAL WALL
18' - 10"
6' - 6" ARCHITECTURAL WALL
6' - 6" ARCHITECTURAL WALL

4" RD

STAIR SHAFT BY ARCH
11' - 4"
4' - 0" WALL BY ARCH (TYP FOR 3 SIDES OF STAIR SHAFT)
H
P-200
14' - 4" | 22' - 1"

7' - 0" ARCHITECTURAL WALL
7' - 0" ARCHITECTURAL WALL
18' - 0" | 33' - 2" | 66' - 10" | 71' - 6"

36' - 5" | 22' - 0"

A
B
C
D
F
G
H
K

NOTES:

1. THE WORK OF OTHER DISCIPLINES IS HIDDEN OR HALF-TONE FOR CLARITY. REFER TO CONTRACT DRAWINGS OF OTHER DISCIPLINES FOR ADDITIONAL WORK BY OTHERS.
2. COORDINATE LOCATION OF FLOOR DRAIN WITH AIR SCOUR EQUIPMENT.

ROOF - OVERALL

3/32" = 1'-0"

3/32" = 1'-0" | 10 8 6 4 2 0 11'

WARNING
IT IS A VIOLATION OF SECTION 7209.2 OF THE NEW YORK STATE EDUCATION LAW FOR ANY PERSON, UNLESS ACTING UNDER THE DIRECTION OF A LICENSED PROFESSIONAL ENGINEER, TO ALTER IN ANY WAY PLANS, SPECIFICATIONS, PLATS OR REPORTS TO WHICH THE SEAL OF A PROFESSIONAL ENGINEER HAS BEEN APPLIED. IF AN ITEM BEARING THE SEAL OF A PROFESSIONAL ENGINEER IS ALTERED, THE ALTERING ENGINEER SHALL AFFIX TO THE ITEM HIS SEAL AND THE NOTATION "ALTERED BY" FOLLOWED BY HIS SIGNATURE, THE DATE, AND A SPECIFIC DESCRIPTION OF THE ALTERATION.

REV	ISSUED FOR	DATE	BY

PROJECT ENGINEER:	R. FROST
DESIGNED BY:	M. GIORDANO
DRAWN BY:	J. LURIE
CHECKED BY:	R. VAN DYKE
IF THIS BAR DOES NOT MEASURE 1" THEN DRAWING IS NOT TO FULL SCALE	0 1/2" 1"

BID SET

STATE OF NEW YORK — MARC A. GIORDANO — 099858 — LICENSED PROFESSIONAL ENGINEER

Hazen
HAZEN AND SAWYER
498 SEVENTH AVENUE, 11th FLOOR
NEW YORK, NEW YORK 10018

WESTCHESTER JOINT WATER WORKS
MAMARONECK, NY

RYE LAKE WATER FILTRATION PLANT
HARRISON, NY

FILTRATION PLANT
PLUMBING
ROOF PLAN

DATE:	FEB 2025
HAZEN NO.:	90388-000
CONTRACT NO.:	A1364-A
DRAWING NUMBER:	P-114

Autodesk Docs://90388-000_Rye_Lake_Filtration/90388-000-WFP-P.rvt
2/7/2025 2:29:25 PM

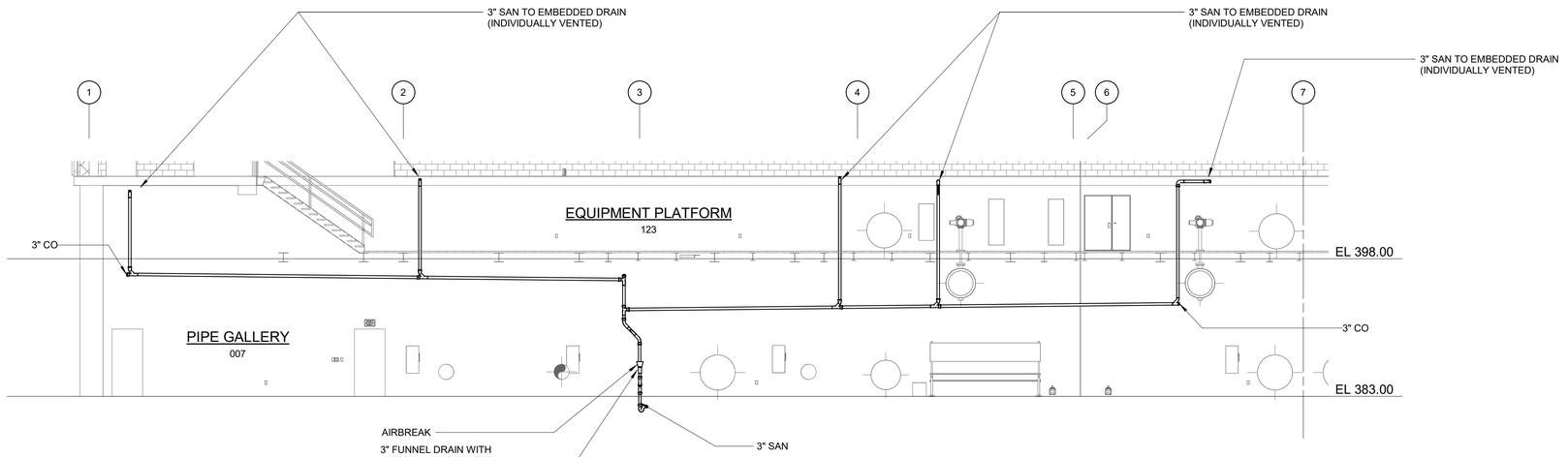

SECTION G
1/8" = 1'-0"
P-100

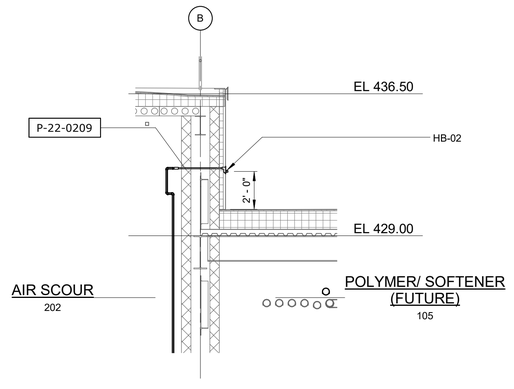

SECTION H
1/4" = 1'-0"
P-114

1/4" = 1'-0" 1 0 1 2 3 7"

1/8" = 1'-0" 8 6 4 2 0 8'

WARNING
IT IS A VIOLATION OF SECTION 7209.2 OF THE NEW YORK STATE EDUCATION LAW FOR ANY PERSON, UNLESS ACTING UNDER THE DIRECTION OF A LICENSED PROFESSIONAL ENGINEER, TO ALTER IN ANY WAY PLANS, SPECIFICATIONS, PLATS OR REPORTS TO WHICH THE SEAL OF A PROFESSIONAL ENGINEER HAS BEEN APPLIED. IF AN ITEM BEARING THE SEAL OF A PROFESSIONAL ENGINEER IS ALTERED, THE ALTERING ENGINEER SHALL AFFIX TO THE ITEM HIS SEAL AND THE NOTATION "ALTERED BY" FOLLOWED BY HIS SIGNATURE, THE DATE, AND A SPECIFIC DESCRIPTION OF THE ALTERATION.

REV	ISSUED FOR	DATE	BY

PROJECT ENGINEER:	R. FROST
DESIGNED BY:	M. GIORDANO
DRAWN BY:	J. LURIE
CHECKED BY:	R. VAN DYKE

IF THIS BAR DOES NOT MEASURE 1" THEN DRAWING IS NOT TO FULL SCALE 0 1/2" 1"

BID SET

STATE OF NEW YORK · MARC A. GIORDANO · 099858 · PROFESSIONAL ENGINEER

Hazen

HAZEN AND SAWYER
498 SEVENTH AVENUE, 11th FLOOR
NEW YORK, NEW YORK 10018

WESTCHESTER JOINT WATER WORKS
MAMARONECK, NY

RYE LAKE WATER FILTRATION PLANT
HARRISON, NY

FILTRATION PLANT
PLUMBING
SECTIONS

DATE:	FEB 2025
HAZEN NO.:	90388-000
CONTRACT NO.:	A1364-A
DRAWING NUMBER:	P-200

Autodesk Docs://90388-000_Rye_Lake_Filtration/90388-000-WFP-P.rvt
2/7/2025 2:29:27 PM

PLUMBING FIXTURE SCHEDULE

TAG	LOCATION	FIXTURE	MANUFACTURER		GALLONS PER FLUSH/MIN	FAUCET/FLUSH VALVE MANUFACTURER	FAUCET/VALVE MODEL	PW (IN)	HW (IN)	TW (IN)	DRAIN (IN)	VENT (IN)	ELECTRICAL				NOTES
			MAKE	MODEL									VOLT	PHASE	HZ	AMP	
BFP-01	FIRE SPRINKLER RISER ROOM (110)	REDUCED PRESSURE PRINCIPLE BACKFLOW PREVENTER	WATTS	LF909 LARGE	-	-	-	4	-	-	-	-	-	-	-	-	1, 9, 12, 14, 18, 19
BFP-02	FIRE SPRINKLER RISER ROOM (110)	REDUCED PRESSURE PRINCIPLE BACKFLOW PREVENTER	WATTS	LF909 SMALL	-	-	-	2	-	-	-	-	-	-	-	-	1, 9, 12, 14, 18, 19
BFP-03	FIRE SPRINKLER RISER ROOM (110)	DOUBLE CHECK DETECTOR BACKFLOW PREVENTER	WATTS	LF856	-	-	-	6	-	-	-	-	-	-	-	-	1, 10, 12, 13
CODP	SEE PLANS	EXTRA HEAVY DUTY FLOOR CLEANOUT	ZURN	ZS1400-AR	-	-	-	-	-	-	SEE PLANS	-	-	-	-	-	2, 15, 16
ESE-01	CHEMICAL AREAS	EMERGENCY SHOWER/EYEWASH	BRADLEY CORPORATION	S19314DCBF	22	-	-	-	-	1-1/4	-	-	115	1	60	3.0	5, 30, 17
ESE-02	FILL STATIONS	FROSTPROOF EMERGENCY SHOWER/EYEWASH	BRADLEY CORPORATION	S19-310TW18	22	-	-	-	-	1-1/4	-	-	115	1	60	3.0	5, 30
ET	HVAC ROOM (208)	EXPANSION TANK	AMTROL	THERM X TROL	-	-	-	1	-	-	-	-	-	-	-	-	1, 18
FD	REFER TO DRAWINGS	FLOOR DRAIN	ZURN	Z508-AR	-	-	-	-	-	-	SEE PLANS	-	-	-	-	-	2, 15, 16, 29
DF	LOBBY (112)	DRINKING FOUNTAIN	ELKAY	EMABFT	0.75	-	-	3/8	-	-	1-1/4	1-1/4	115	1	60	-	1, 18, 19
HB-01	REFER TO DRAWINGS	HOSE BIBB	ZURN	Z1341XL	5	-	-	3/4	-	-	-	-	-	-	-	-	1, 4, 19, 20
HB-02	REFER TO DRAWINGS	FROSTPROOF HOSE BIBB	ZURN	Z1321XL	5	-	-	3/4	-	-	-	-	-	-	-	-	1, 4, 19, 21
HR	DEWATERING ROOM (109)	HOSE REEL	STEEL EAGLE	K01-0105-1-SS	5	-	-	1/2	-	-	-	-	-	-	-	-	1, 23
KS	OPEN OFFICE (214)	KITCHEN SINK	JUST	SL-1921-A-GR	1.75	CHICAGO	786-CP	1/2	1/2	-	1-1/2	1-1/4	-	-	-	-	1, 18, 19, 25
LAV	REFER TO DRAWINGS	WALL HUNG LAVATORY	AMERICAN STANDARD	MURRO 0954004EC.020	0.4	AMERICAN STANDARD	7755.3.5	1/2	1/2	-	1-1/4	1-1/4	-	-	-	-	1, 18, 19, 24, 25, 31
MSB	MAINT CLO (114) & MAINT. CLO (212)	MOP SINK BASIN	WESTERN WILLIAMS	SS-2424	3	T & S BRASS	B-0665-BSTR	1/2	1/2	-	3	1-1/2	-	-	-	-	1, 18, 19, 22, 25
RD	ROOF	ROOF DRAIN	ZURN	Z-121-AR-C	-	-	-	-	-	-	4	-	-	-	-	-	11
SH	MENS LOCKER ROOM (118) AND WOMENS LOCKER ROOM (116)	SHOWER	STERN WILLIAMS	WDA-3410 TERRAZO 60 X 30 ADA SHOWER PAN	2.5	SYMMONS	S5998	1/2	1/2	-	2	2	-	-	-	-	1, 24, 26
SS-01	PROCESS ANALYSIS ROOM (205)	SAMPLING SINK	ELKAY	LRAD291855	3	ELKAY	LK535GN05L2	1/2	-	-	1-1/2	-	-	-	-	-	1, 18, 19, 22, 24, 25
SS-02	PROCESS ANALYSIS ROOM (205)	SERVICE SINK	ELKAY	LRAD291855	3	ELKAY	LK406GN08L2	1/2	1/2	-	1-1/2	1-1/4	-	-	-	-	1, 18, 19, 22, 24, 25
TD	REFER TO DRAWINGS	TRENCH DRAIN	ABT DRAINS	POLYDRAIN	-	-	-	-	-	-	4	2	-	-	-	-	2
TMV	REFER TO DRAWINGS	THERMOSTATIC MIXING VALVE	LAWLER	911-84701	-	-	-	1-1/4	1-1/4	1-1/4	-	-	-	-	-	-	1, 7, 27
UR	MENS BATHROOM (117)	FLUSH VALVE URINAL	KOHLER	K-4991-ET	0.125	KOHLER	K-7528	3/4	-	-	2	1-1/2	-	-	-	-	1, 24, 28
WC	REFER TO DRAWINGS	FLUSH VALVE WATER CLOSET	KOHLER	K-4325-0	1.28	KOHLER	K-10956-SV	1	-	-	4	2	-	-	-	-	1, 6, 24

NOTES:

1. REFER TO SPECIFICATION 22 40 00 FOR CONSTRUCTION AND ACCESSORY DETAILS.
2. REFER TO SPECIFICATION 22 13 16 FOR CONSTRUCTION AND ACCESSORY DETAILS.
3. REFER TO SPECIFICATION 22 14 13 FOR CONSTRUCTION AND ACCESSORY DETAILS.
4. REFER TO SPECIFICATION 22 11 19 FOR CONSTRUCTION AND ACCESSORY DETAILS.
5. REFER TO SPECIFICATION 22 45 00 FOR CONSTRUCTION AND ACCESSORY DETAILS.
6. PROVIDE WATER CLOSET WITH WALL CARRIER AND SOLID PLASTIC SEAT.
7. UNIT TO INCLUDE ROUGH BRONZE FINISH, INLET CHECK VALVES, DIAL THERMOMETERS, LOCKABLE BALL VALVES, 70-90 DEGREE SET POINT.
8. PROVIDE ZURN Z41B-V (BACKWATER VALVE) WHERE SPECIFIED ON DRAWINGS.
9. PROVIDE WITH SENTRYPLUS ALERT UNIVERSAL UPGRADE KIT INCLUDING FLOOD SENSOR AND CONTROL BOX (ONE SHARED SENSOR FOR BOTH 2" RPZS).
10. INSTALL TWO (2) TAMPER SWITCH MONITORS ON INTEGRAL OS & Y VALVES.
11. THREADED OUTLET, FACTORY-APPLIED ACID-RESISTANT EPOXY COATED FINISH, MEMBRANE CLAMP AND UNDERDECK CLAMP.
12. FIXTURE SHALL BE UL LISTED AND APPROVED BY THE FOUNDATION FOR CROSS-CONNECITON CONTROL AND HYDRAULIC REASEARCH OF SOUTHERN CALIFORNIA.
13. FIXTURE SHALL BE FM APPROVED AND MEET THE REQUIRMENTS OF ASSE 1048 AND AWWA C510.
14. FIXTURE SHALL MEET THE REQUIRMENTS OF ASSE 1013 AND AWWA C511-92.
15. FIXTURE SHALL INCLUDE AN ANSI A112.21.1M H-20 EXTRA-HEAVY DUTY STAINLESS STEEL OR POLISHED NICKEL TOP AND ACID-RESISTANT EPOXY-COATED CAST IRON BODY.
16. INSIDE-CAULK CONNECTION FOR XH CAST IRON PIPE, NH CONNECTION FOR NH CAST IRON PIPE, NEO-LOC (OR EQUIVALENT) FOR PVC PIPE.
17. FIXTURE SHALL BE BARRIER-FREE WITH DUST COVER.
18. FIXTURE OR FAUCET SHALL BE CERTIFIED TO NSF-61.
19. FIXTURE SHALL BE CERTIFIED TO NSF-372 OR SHALL BE MANUFACTURED IN ACCORDANCE WITH THE FEDERAL SAFE WATER DRINKING ACT SECTION 1417.
20. FIXTURE SHALL INCLUDE ASSE 1011 VACUUM BREAKER.
21. FIXTURE SHALL INCLUDE ASSE 1019 VACUUM BREAKER.
22. FIXTURE SHALL INCLUDE ASSE 1001 VACUUM BREAKER.
23. FIXTURE SHALL BE ALL STAINLESS STEEL CONSTRUCTION.
24. FIXTURE SHALL MEET THE AMERICANS WITH DISABILITIES ACT GUIDELINES AND ANSI A117.1.
25. PROVIDE ASSE 1070 APPROVED POINT-OF-USE MIXING VALVE.
26. PROVIDE ASSE 1016 APPROVED SHOWER MIXING VALVE.
27. MIXING VALVE SHALL BE ASSE 1071 APPROVED.
28. PROVIDE URINAL WITH WALL CARRIER.
29. PROVIDE FLOOR DRAIN OUTLETS WITH BARRIER TYPE TRAP SEAL MEETING THE REQUIREMENTS OF ASSE 1072. ZURN Z1072 OR EQUAL.
30. PROVIDE WITH S19-324 NEMA 4X SIGNAL SYSTEM WITH STAINLESS STEEL FLOW SWITCH AND 12 FT CABLE.
31. PROVIDE LAVATORY WITH WALL CARRIER, ANGLE STOPS, FLEX TUBE RISERS, STRAINER, AND P TRAP.

PLUMBING PUMP SCHEDULE

TAG	LOCATION	MANUFACTURER		TYPE	CONTROLS	CAPACITY (GPM)	HEAD (FT)	SHUTOFF HEAD (FT)	SUCTION SIZE (IN)	DISCHARGE SIZE (IN)	IMPELLER TYPE	MOTOR		POWER			NOTES
		MAKE	MODEL									HP	RPM	VOLT	PH	HZ	
SP-01	PIPE GALLERY (007)	LIBERTY PUMPS	LGS203M	SUMP PUMP	DUPLEX PANEL, ANALOG FLOAT	50	35	110	-	1 1/4"	-	2	3450	208	3	60	1, 3, 6
SP-02	PIPE GALLERY (007)	LIBERTY PUMPS	LGS203M	SUMP PUMP	DUPLEX PANEL, ANALOG FLOAT	50	35	110	-	1 1/4"	-	2	3450	208	3	60	1, 4, 6
SP-03	ELEVATOR (E01)	LIBERTY PUMPS	FL63M-5	SUMP PUMP	SIMPLEX PANEL, ANALOG FLOAT	50	45	-	-	2"	VORTEX	3/5	3450	208	3	60	1, 6, 7
RCP-01	HVAC ROOM (203)	XYLEM	ECOCIRC XLN20-35	RECIRCULATION PUMP	INTEGRAL DIGITAL LOGIC CONTROLLER, EXTERNAL TEMPERATURE SENSOR	3.3	10.6	-	1 1/2"	1 1/2"	-	1/12	VAR	115	1	60	2, 5, 6
RCP-02	HVAC ROOM (208)	XYLEM	ECOCIRC XLN20-35	RECIRCULATION PUMP	INTEGRAL DIGITAL LOGIC CONTROLLER, EXTERNAL TEMPERATURE SENSOR	3.3	10.6	-	1 1/2"	1 1/2"	-	1/12	VAR	115	1	60	2, 5, 6

NOTES:

1. REFER TO SPECIFICATION 22 33 00 FOR CONSTRUCTION AND ACCESSORY DETAILS.
2. REFER TO SPECIFICATION 22 11 23 FOR CONSTURCTION AND ACCESSORY DETAILS.
3. DUTY PUMP
4. STANDBY PUMP
5. PUMP SHALL HAVE STAINELSS STEEL HOUSRING, AND SHALL BE CERTIFIED TO NSF-372.
6. PUMP SHALL BE UL LISTED.
7. PUMP SHALL COMPLY WITH ALL APPLICABLE REQUIREMENTS OF ASME A17.1-2022.

WARNING
IT IS A VIOLATION OF SECTION 7209.2 OF THE NEW YORK STATE EDUCATION LAW FOR ANY PERSON, UNLESS ACTING UNDER THE DIRECTION OF A LICENSED PROFESSIONAL ENGINEER, TO ALTER IN ANY WAY PLANS, SPECIFICATIONS, PLATS OR REPORTS TO WHICH THE SEAL OF A PROFESSIONAL ENGINEER HAS BEEN APPLIED. IF AN ITEM BEARING THE SEAL OF A PROFESSIONAL ENGINEER IS ALTERED, THE ALTERING ENGINEER SHALL AFFIX TO THE ITEM HIS SEAL AND THE NOTATION "ALTERED BY" FOLLOWED BY HIS SIGNATURE, THE DATE, AND A SPECIFIC DESCRIPTION OF THE ALTERATION.

REV	ISSUED FOR	DATE	BY

PROJECT ENGINEER: R. FROST
DESIGNED BY: M. GIORDANO
DRAWN BY: J. LURIE
CHECKED BY: R. VAN DYKE
IF THIS BAR DOES NOT MEASURE 1" THEN DRAWING IS NOT TO FULL SCALE 0 1/2" 1"

BID SET

MARC A. GIORDANO — NEW YORK STATE — 099858 — PROFESSIONAL ENGINEER

Hazen

HAZEN AND SAWYER
498 SEVENTH AVENUE, 11th FLOOR
NEW YORK, NEW YORK 10018

WESTCHESTER JOINT WATER WORKS
MAMARONECK, NY

RYE LAKE WATER FILTRATION PLANT
HARRISON, NY

FILTRATION PLANT
PLUMBING
SCHEDULES - SHEET 1

DATE: FEB 2025
HAZEN NO.: 90388-000
CONTRACT NO.: A1364-A
DRAWING NUMBER: P-600

Autodesk Docs://90388-000_Rye_Lake_Filtration/90388-000-WFP-P.rvt
2/7/2025 2:29:28 PM

PIPING SYSTEM SCHEDULE

SYSTEM	SYSTEM TYPE	LOCATION	PIPE	FITTING	JOINT	COATING	INSULATION	JACKET	SPECIFICATION REFERENCE	NOTES
CLW	CLEARWATER DRAIN	ABOVE GROUND	CAST IRON - NH - ASTM A888 AND CISPI 301	CAST IRON - NH - ASTM A888 AND CISPI 301	HUBLESS COUPLING - CISPI 301	OIL-BASED ENAMEL	-	-	22 13 16	-
CLW	CLEARWATER DRAIN	BELOW GROUND	CAST IRON - XH - ASTM A74	CAST IRON - XH - ASTM A74	POURED LEAD AND OAKUM	OIL-BASED ENAMEL	-	-	22 13 16	-
FPW	FIRE PROTECTION	ABOVE GROUND	CARBON STEEL - ASTM A795 - SCH 40	DUCTILE IRON - ASTM A536	GROOVED COUPLING - DUCTILE IRON - ASTM A536	FUSION-BONDED EPOXY	-	-	21 13 13	1, 2
FPW	FIRE PROTECTION	BELOW GROUND	DUCTILE IRON - AWWA C151	DUCTILE IRON - AWWA C110	FLANGE - ASME B16.1 - CLASS 125	FUSION-BONDED EPOXY	-	-	21 13 13	1
FPW	FIRE PROTECTION	CHEMICAL AREAS	AUSTENTITIC STAINLESS STEEL - ASTM A312 - GRADE 304, 304L, 316 OR 316L - SCH 40	WROT AUSTENTITIC STAINLESS STEEL - ASTM A403 - GRADE 304, 304L, 316 OR 316L	THREADED - ASME B1.20.1	-	-	-	21 13 13	1
FUD	SUBSOIL DRAIN	ALL	PVC PERFORATED SEWER PIPE - ASTM D2729	PVC - ASTM D2665	TWO-PART SOLVENT CEMENT - ASTM F656 AND D2855	-	-	-	22 13 16	-
HWR	HOT WATER RETURN	ALL	COPPER TUBE - TYPE L - ASTM B88	WROT COPPER - ASME B16.22	SOLDER	FUSION-BONDED EPOXY	CELLULAR GLASS - ASTM C 552, TYPE II, CLASS 2	PVC - ASTM C 921, TYPE I	22 11 13	3, 4
HWS	HOT WATER SUPPLY	CHEMICAL AREAS	CPVC - ASTM F441 - SCH 40	CPVC - ASTM F438 - SCH 40	TWO-PART SOLVENT CEMENT - ASTM F493 AND D2846	-	CELLULAR GLASS - ASTM C 552, TYPE II, CLASS 2	PVC -	22 11 13	3, 4
HWS	HOT WATER SUPPLY	NON-CHEMICAL AREAS	COPPER TUBE - TYPE L - ASTM B88	WROT COPPER - ASME B16.22	SOLDER	FUSION-BONDED EPOXY	CELLULAR GLASS - ASTM C 552, TYPE II, CLASS 2	PVC - ASTM C 921, TYPE I	22 11 13	3, 4
NPW	NON-POTABLE WATER	CHEMICAL AREAS	CPVC - ASTM F441 - SCH 40	CPVC - ASTM F438 - SCH 40	TWO-PART SOLVENT CEMENT - ASTM F493 AND D2846	-	CELLULAR GLASS - ASTM C 552, TYPE II, CLASS 2	PVC - ASTM C 921, TYPE I	22 11 13	3, 4
NPW	NON-POTABLE WATER	NON-CHEMICAL AREAS	COPPER TUBE - TYPE L - ASTM B88	WROT COPPER - ASME B16.22	SOLDER	FUSION-BONDED EPOXY	CELLULAR GLASS - ASTM C 552, TYPE II, CLASS 2	PVC - ASTM C 921, TYPE I	22 11 13	3, 4
NPW HW	NON-POTABLE HOT WATER	ALL	COPPER TUBE - TYPE L - ASTM B88	WROT COPPER - ASME B16.22	SOLDER	FUSION-BONDED EPOXY	CELLULAR GLASS - ASTM C 552, TYPE II, CLASS 2	PVC - ASTM C 921, TYPE I	22 11 13	3, 4
PW	POTABLE WATER	ABOVE GROUND (NON-CHEMICAL AREAS)	COPPER TUBE - TYPE L - ASTM B88	WROT COPPER - ASME B16.22	SOLDER	FUSION-BONDED EPOXY	CELLULAR GLASS - ASTM C 552, TYPE II, CLASS 2	PVC - ASTM C 921, TYPE I	22 11 13	3, 4
PW	POTABLE WATER	BELOW GROUND	COPPER TUBE - TYPE K - ASTM B88	WROT COPPER - ASME B16.22	SOLDER	FUSION-BONDED EPOXY	CELLULAR GLASS - ASTM C 552, TYPE II, CLASS 2	PVC - ASTM C 921, TYPE I	22 11 13	3, 4
PW	POTABLE WATER	CHEMICAL AREAS	CPVC - ASTM F441 - SCH 40	CPVC - ASTM F438 - SCH 40	TWO-PART SOLVENT CEMENT - ASTM F493 AND D2846	-	CELLULAR GLASS - ASTM C 552, TYPE II, CLASS 2	PVC - ASTM C 921, TYPE I	22 11 13	3, 4
RWL	STORM DRAINAGE	ABOVE GROUND	PVC - ASTM D2665	PVC - ASTM D2665	TWO-PART SOLVENT CEMENT - ASTM F656 AND D2855	-	FIBERGLASS - ASTM C1393	PVC - ASTM C 921, TYPE I	22 14 13	4, 5
RWL	STORM DRAINAGE	BELOW GROUND AND IN PIPE GALLERY	CAST IRON - XH - ASTM A74	CAST IRON - XH - ASTM A74	POURED LEAD AND OAKUM	OIL-BASED ENAMEL	-	-	22 14 13	-
SAN	SANITARY DRAINAGE	ABOVE GROUND	PVC - ASTM D2665	PVC - ASTM D2665	TWO-PART SOLVENT CEMENT - ASTM F656 AND D2855	-	-	-	22 13 16	-
SAN	SANITARY DRAINAGE	BELOW GROUND AND IN PIPE GALLERY	CAST IRON - XH - ASTM A74	CAST IRON - XH - ASTM A74	POURED LEAD AND OAKUM	OIL-BASED ENAMEL	-	-	22 13 16	-
SAN	SANITARY DRAINAGE	EMBEDDED IN SLAB	CAST IRON - NH - ASTM A888 AND CISPI 301	CAST IRON - NH - ASTM A888 AND CISPI 301	HUBLESS COUPLING - CISPI 301	-	-	-	22 13 16	6
SANP	SUMP PUMP DISCHARGE	ALL	PVC PRESSURE PIPE - ASTM D1784 - SCH 80	PVC PRESSURE FITTINGS - ASTM D2467 - SCH 80	TWO-PART SOLVENT CEMENT - ASTM F656 AND D2855	-	-	-	22 11 13	-
TW	TEPID WATER	ALL	CPVC - ASTM F441 - SCH 40	CPVC - ASTM F438 - SCH 40	TWO-PART SOLVENT CEMENT - ASTM F493 AND D2846	-	-	-	22 11 13	-
V	SANITARY VENT	ABOVE GROUND	PVC - ASTM D2665	PVC - ASTM D2665	TWO-PART SOLVENT CEMENT - ASTM F656 AND D2855	-	-	-	22 13 16	-
V	SANITARY VENT	BELOW GROUND AND IN PIPE GALLERY	CAST IRON - XH - ASTM A74	CAST IRON - XH - ASTM A74	POURED LEAD AND OAKUM	OIL-BASED ENAMEL	-	-	22 13 16	-

NOTES:
1. PIPING, FITTINGS AND JOINTS SHALL BE UL LISTED AND FM APPROVED FOR USE AS FIRE SPRINKLER PIPING. SYSTEM SHALL CONFORM TO NFPA 13 AND NFPA 24.
2. HOT-DIPPED GALVANIZED CONFORMING TO ASTM A123.
3. PIPING, FITTINGS, JOINTS AND BRAZE MATERIALS SHALL BE CERTIFIED TO NSF 61 AND ANNEX G.
4. REFER TO SPECIFICATION 22 07 19 FOR INSULATION AND JACKET REQUIREMENTS.
5. INSULATE ALL HORIZONTAL PIPES.
6. COUPLINGS SHALL BE HEAVY DUTY (CHARLOTTE PIPE PART NO SDC 4 OR EQUIVALENT), AND SHALL BE EXPLICITLY SPECIFIED BY THE MANUFACTURER AS SUITABLE FOR CONCRETE-ENCASEMENT. WRAP ALL COUPLINGS IN POLYETHYLENE SHEET MIN 3" BEYOND COUPLING EDGES. WRAP SHALL BE VIRGIN POLYETHYLENE CONFORMING TO THE REQUIREMENTS OF ASTM D WITH A MINIMUM THICKNESS OF .008" FOR LOW-DENSITY WRAP AND .004" FOR HIGH-DENSITY CROSS-LAMINATED WRAP. VISUALLY INSPECT FOR ANY RIPS OR TEARS AND REPLACE ACCORDINGLY BEFORE THE SLAB IS POURED. REFER TO THE LATEST EDITION OF THE CISPI CAST IRON SOIL PIPE AND FITTINGS HANDBOOK HANDBOOK.

WATER HEATER SCHEDULE

TAG	LOCATION	MANUFACTURER		TYPE	PW	HW	INPUT	DESIGN FLOW RATE	ELEMENT	ELEMENT	STORAGE	RECOVERY RATE @ 100	STORAGE	POWER			NOTES
		MAKE	MODEL		(IN)	(IN)	(KW)	(GPM)	(QTY)	(KW)	TEMPERATURE (°F)	DEGREE RISE (GPH)	(GALLONS)	VOLT	PH	HZ	
WH	HVAC ROOM (208)	HUBBELL	SEA120	ELECTRIC	1 1/2"	1 1/2"	18	25	3	6	160	74	120	460	3	60	1-4
DWH	HVAC ROOM (215)	HUBBELL	E40	ELECTRIC	3/4	3/4	4.5	5	2	4.5	160	12	40	208	3	60	1-4

NOTES:
1. REFER TO SPECIFICATION 22 33 00 FOR CONSTRUCTION AND ACCESSORY DETAILS
2. ALL WATER HEATERS SHALL MEET OR EXCEED STANDBY LOSS REQUIREMENTS PER US DEPT OF ENERGY AND ASHRAE 90.1-2016
3. RATED FOR 150 PSIG WORKING PRESSURE
4. INSTALL DIELECTRIC UNIONS AND SHUT OFF ISOLATION VALVES AT EACH WATER CONNECTION

INSTANTANEOUS WATER HEATER SCHEDULE

TAG	LOCATION	MANUFACTURER		TYPE	PW	HW	INPUT	ΔT	FLOW (GPM)		POWER			NOTES
		MAKE	MODEL		(IN)	(IN)	(KW)	(°F)	DESIGN	TURN-ON	VOLT	PH	HZ	
IWH-01	DEWATERING ROOM (109)	EEMAX	AP054480	ELECTRIC	1-1/4	1-1/4	54	18	20	1.5	480	3	60	1
IWH-02	POLYER ROOM (107)	EEMAX	AP054480	ELECTRIC	1-1/4	1-1/4	54	18	20	1.5	480	3	60	1, 2
IWH-03	PROCESS ANALYSIS ROOM (205)	EEMAX	SPEX3208	ELECTRIC	3/8	3/8	3	41	.5	.25	208	1	60	1, 3

NOTES:

1. REFER TO SPECIFICATION 22 33 00 FOR CONSTRUCTION AND ACCESSORY DETAILS
2. FOR FUTURE USE. DO NOT CONNECT WATERSIDE CONNECTIONS.
3. COORDINATE WITH ARCHITECT FOR INSTALLATION IN CASEWORK.

STORAGE TANK SCHEDULE

TAG	LOCATION	MANUFACTURER		CAPACITY (GAL)	LINING MATERIAL	INSULATION	WEIGHT (LBS)	NOTES
		MAKE	MODEL					
ST	HVAC ROOM (208)	HUBBELL	SH120SL	120	HYDRASTONE CEMENT	2" POLYURETHANE FOAM	900	1-3

NOTES:
1. REFER TO SPECIFICATION 22 33 00 FOR CONSTRUCTION AND ACCESSORY DETAILS
2. MAXIMUM PRESSURE 150 PSI
3. TANK MATERIAL SHALL BE CARBON STEEL

WARNING
IT IS A VIOLATION OF SECTION 7209.2 OF THE NEW YORK STATE EDUCATION LAW FOR ANY PERSON, UNLESS ACTING UNDER THE DIRECTION OF A LICENSED PROFESSIONAL ENGINEER, TO ALTER IN ANY WAY PLANS, SPECIFICATIONS, PLATS OR REPORTS TO WHICH THE SEAL OF A PROFESSIONAL ENGINEER HAS BEEN APPLIED. IF AN ITEM BEARING THE SEAL OF A PROFESSIONAL ENGINEER IS ALTERED, THE ALTERING ENGINEER SHALL AFFIX TO THE ITEM HIS SEAL AND THE NOTATION "ALTERED BY" FOLLOWED BY HIS SIGNATURE, THE DATE, AND A SPECIFIC DESCRIPTION OF THE ALTERATION.

REV	ISSUED FOR	DATE	BY

PROJECT ENGINEER: R. FROST
DESIGNED BY: M. GIORDANO
DRAWN BY: J. LURIE
CHECKED BY: R. VAN DYKE
IF THIS BAR DOES NOT MEASURE 1" THEN DRAWING IS NOT TO FULL SCALE 0 1/2" 1"

BID SET

MARC A. GIORDANO — 099858 — STATE OF NEW YORK — PROFESSIONAL ENGINEER

Hazen
HAZEN AND SAWYER
498 SEVENTH AVENUE, 11th FLOOR
NEW YORK, NEW YORK 10018

WESTCHESTER JOINT WATER WORKS
MAMARONECK, NY

RYE LAKE WATER FILTRATION PLANT
HARRISON, NY

FILTRATION PLANT
PLUMBING
SCHEDULES - SHEET 2

DATE: FEB 2025
HAZEN NO.: 90388-000
CONTRACT NO.: A1364-A
DRAWING NUMBER: P-601

Autodesk Docs://90388-000_Rye_Lake_Filtration/90388-000-WFP-P.rvt
2/7/2025 2:29:29 PM

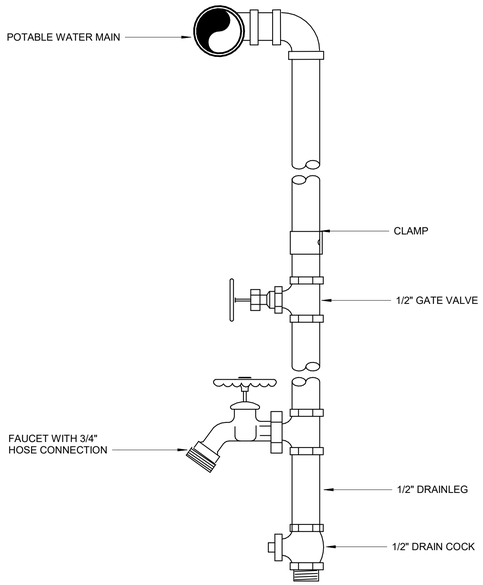

TYPICAL WATER DROP

P-22-0304

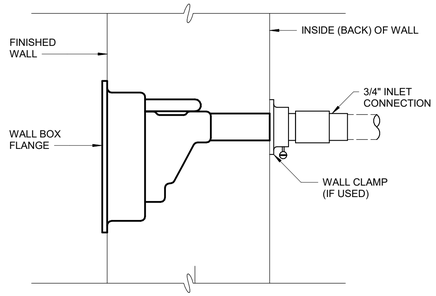

FROSTPROOF HYDRANT

P-22-0302

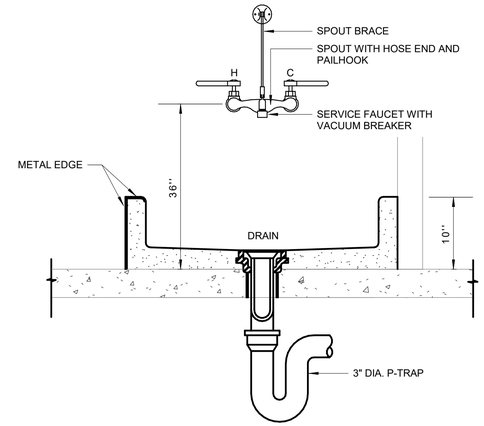

SERVICE SINK

P-22-0208

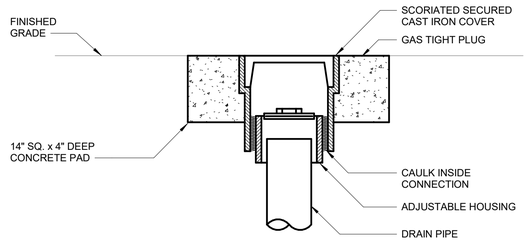

CLEANOUT TO GRADE

P-22-0203

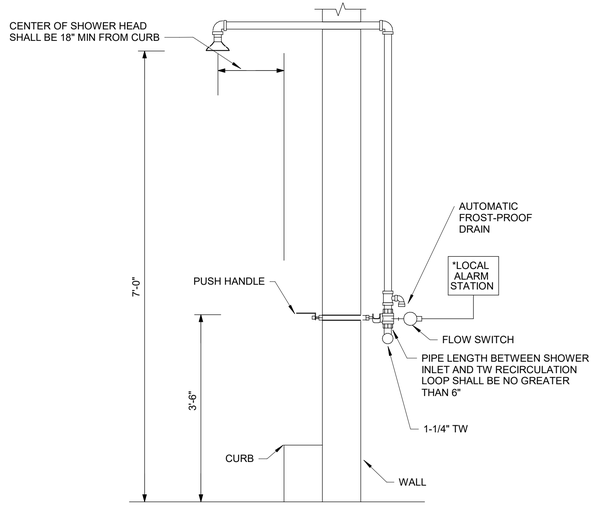

SAFETY STATION

EXTERIOR

TYPE 1

EMERGENCY DRENCH SHOWER

P-22-0402

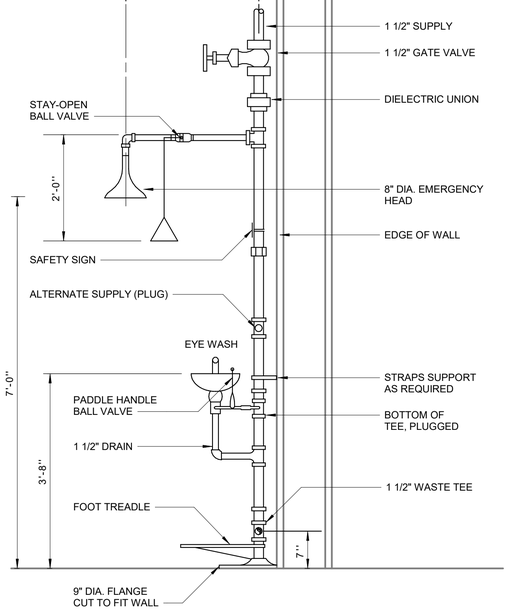

EMERGENCY SHOWER/EYEWASH

P-22-0401

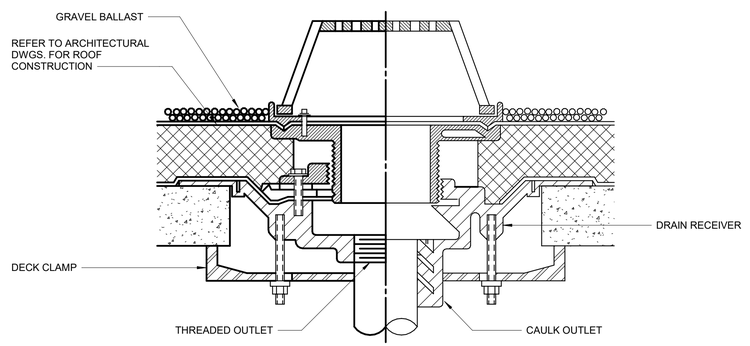

LARGE SUMP ROOF DRAIN

P-22-0201

WARNING
IT IS A VIOLATION OF SECTION 7209.2 OF THE NEW YORK STATE EDUCATION LAW FOR ANY PERSON, UNLESS ACTING UNDER THE DIRECTION OF A LICENSED PROFESSIONAL ENGINEER, TO ALTER IN ANY WAY PLANS, SPECIFICATIONS, PLATS OR REPORTS TO WHICH THE SEAL OF A PROFESSIONAL ENGINEER HAS BEEN APPLIED. IF AN ITEM BEARING THE SEAL OF A PROFESSIONAL ENGINEER IS ALTERED, THE ALTERING ENGINEER SHALL AFFIX TO THE ITEM HIS SEAL AND THE NOTATION "ALTERED BY" FOLLOWED BY HIS SIGNATURE, THE DATE, AND A SPECIFIC DESCRIPTION OF THE ALTERATION.

REV	ISSUED FOR	DATE	BY

PROJECT ENGINEER:	R. FROST
DESIGNED BY:	M. GIORDANO
DRAWN BY:	J. LURIE
CHECKED BY:	R. VAN DYKE
IF THIS BAR DOES NOT MEASURE 1" THEN DRAWING IS NOT TO FULL SCALE	0 1/2" 1"

BID SET

STATE OF NEW YORK — MARC A. GIORDANO — 099858 — PROFESSIONAL ENGINEER

Hazen

HAZEN AND SAWYER
498 SEVENTH AVENUE, 11th FLOOR
NEW YORK, NEW YORK 10018

WESTCHESTER JOINT WATER WORKS
MAMARONECK, NY

RYE LAKE WATER FILTRATION PLANT
HARRISON, NY

FILTRATION PLANT
PLUMBING
DETAILS - SHEET 1

DATE:	FEB 2025
HAZEN NO.:	90388-000
CONTRACT NO.:	A1364-A
DRAWING NUMBER:	P-602

Autodesk Docs://90388-000_Rye_Lake_Filtration/90388-000-WFP-P.rvt
2/7/2025 2:29:30 PM

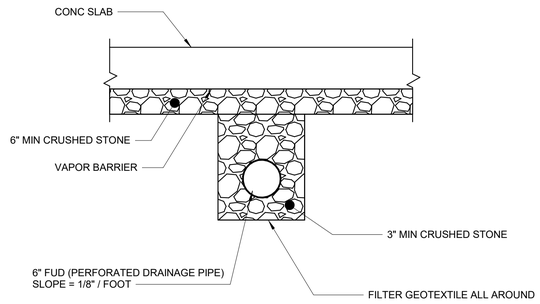

NOTES:

1. SEE PIPING SCHEDULE ON P-601 FOR PIPE, FITTING AND JOINT MATERIAL AND SPECIFICATIONS.
2. SEE P-100 FOR ROUTING.
3. SEE CIVIL DRAWINGS FOR MANHOLE CONNECTION.

SUB-SLAB PERFORATED DRAINAGE PIPE INSTALLATION

DETAIL	A
NTS	P-100

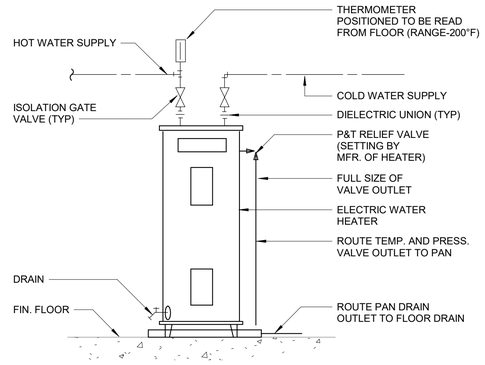

ELECTRIC WATER HEATER

P-22-0404

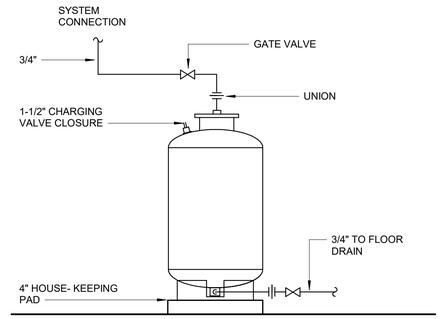

NOTES:

1. TANK VOLUME - 22 GAL.
   ACCEPTANCE VOL. - 12 GAL.

EXPANSION TANK

P-22-0903

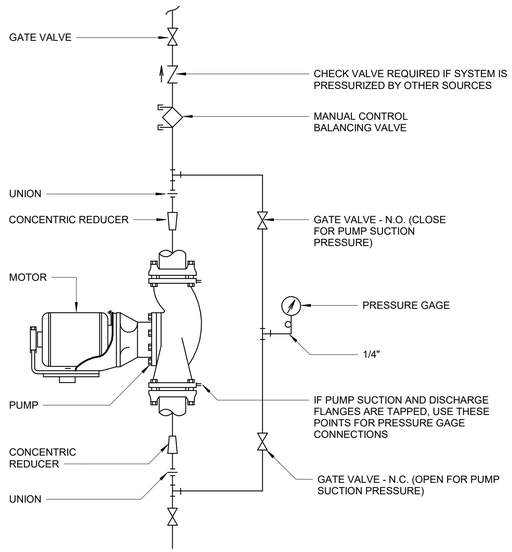

INLINE CENTRIFUGAL PUMP

P-22-0218

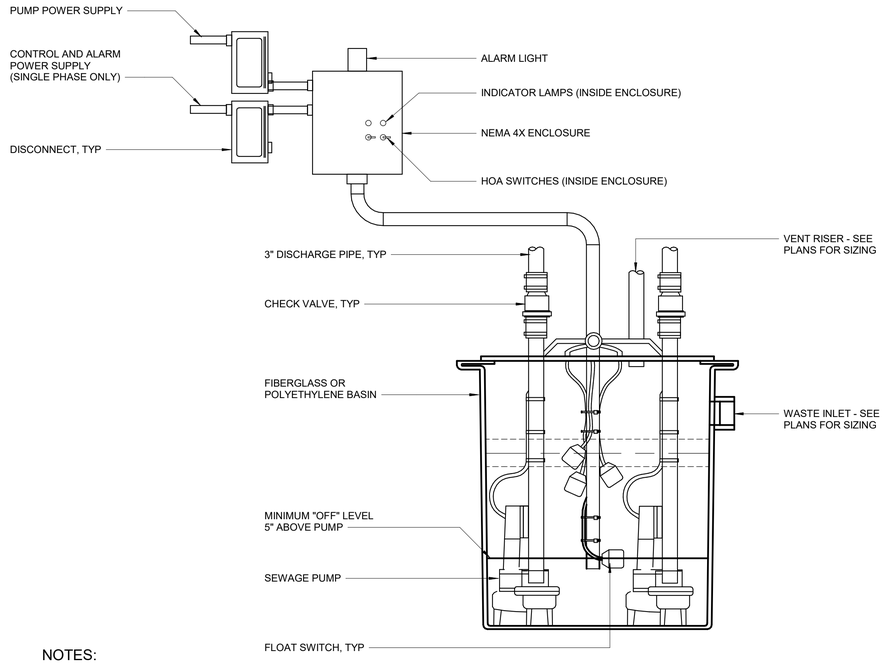

NOTES:

1. THREE PHASSE PANELS SHALL HAVE A TRANSFORMER WITH SECONDARY FUSING.
2. ALARM-CONTROL CIRCUIT SHALL BE SEPERATE FROM PUMP POWER (SINGLE PHASE ONLY).

DUPLEX SUMP PUMP

P-22-0913

WARNING
IT IS A VIOLATION OF SECTION 7209.2 OF THE NEW YORK STATE EDUCATION LAW FOR ANY PERSON, UNLESS ACTING UNDER THE DIRECTION OF A LICENSED PROFESSIONAL ENGINEER, TO ALTER IN ANY WAY PLANS, SPECIFICATIONS, PLATS OR REPORTS TO WHICH THE SEAL OF A PROFESSIONAL ENGINEER HAS BEEN APPLIED. IF AN ITEM BEARING THE SEAL OF A PROFESSIONAL ENGINEER IS ALTERED, THE ALTERING ENGINEER SHALL AFFIX TO THE ITEM HIS SEAL AND THE NOTATION "ALTERED BY" FOLLOWED BY HIS SIGNATURE, THE DATE, AND A SPECIFIC DESCRIPTION OF THE ALTERATION.

REV	ISSUED FOR	DATE	BY

PROJECT ENGINEER:	R. FROST
DESIGNED BY:	M. GIORDANO
DRAWN BY:	J. LURIE
CHECKED BY:	R. VAN DYKE

IF THIS BAR DOES NOT MEASURE 1" THEN DRAWING IS NOT TO FULL SCALE 0 1/2" 1"

BID SET

MARC A. GIORDANO — STATE OF NEW YORK — 099868 — LICENSED PROFESSIONAL ENGINEER

Hazen
HAZEN AND SAWYER
498 SEVENTH AVENUE, 11th FLOOR
NEW YORK, NEW YORK 10018

WESTCHESTER JOINT WATER WORKS
MAMARONECK, NY

RYE LAKE WATER FILTRATION PLANT
HARRISON, NY

FILTRATION PLANT
PLUMBING
DETAILS - SHEET 2

DATE:	FEB 2025
HAZEN NO.:	90388-000
CONTRACT NO.:	A1364-A
DRAWING NUMBER:	P-603

Autodesk Docs://90388-000_Rye_Lake_Filtration/90388-000-WFP-P.rvt
2/7/2025 2:29:39 PM

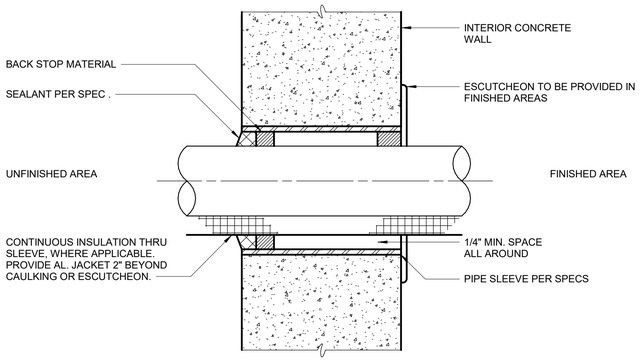

PIPE SLEEVE WALL PENETRATION

P-22-0217

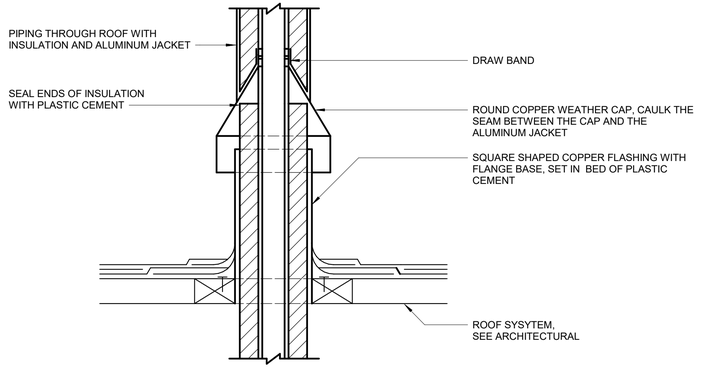

PIPE ROOF PENETRATION

P-22-0215

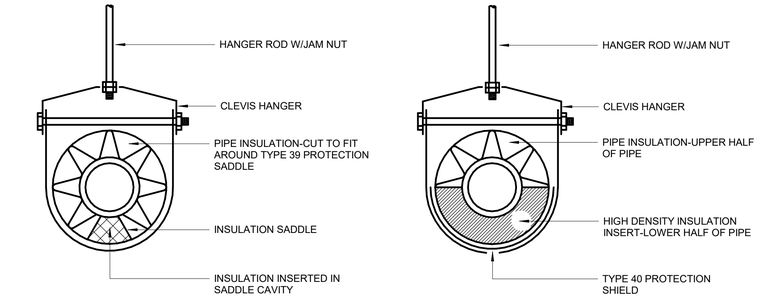

INSULATED PIPE HANGER

P-22-0803

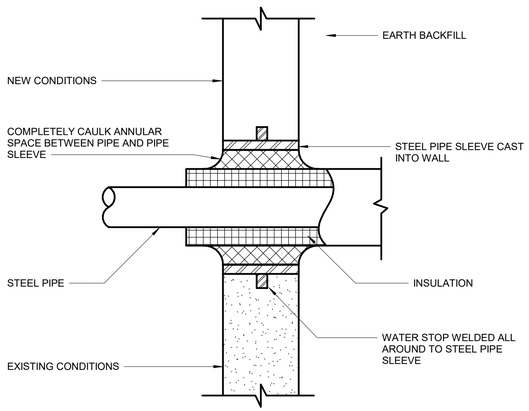

INSULATED PIPE WALL PENETRATION

P-22-0206

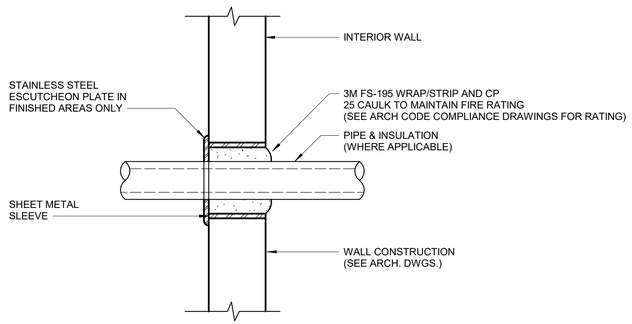

RATED WALL PENETRATION

P-22-0209

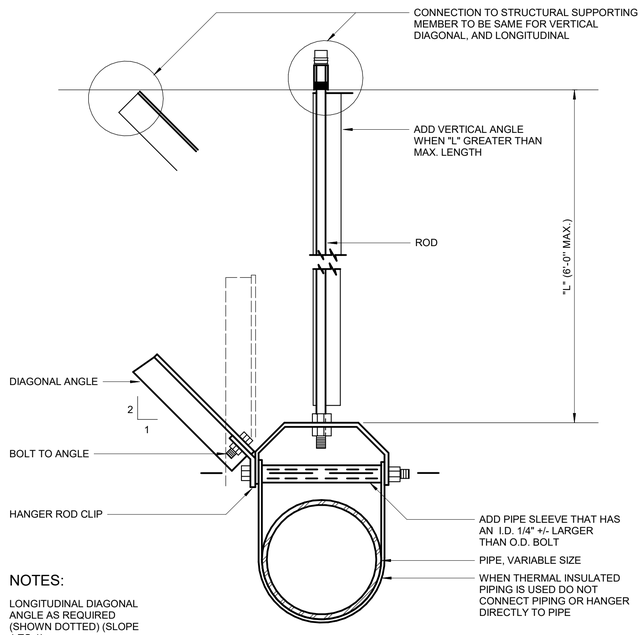

NOTES:

LONGITUDINAL DIAGONAL ANGLE AS REQUIRED (SHOWN DOTTED) (SLOPE 1 TO 1)

SEISMIC PIPE HANGER BRACING

H-23-0501

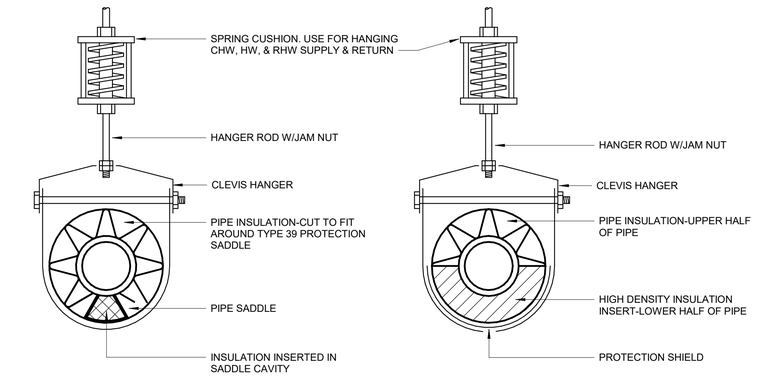

INSULATED PIPE SPRING HANGER

P-22-0806

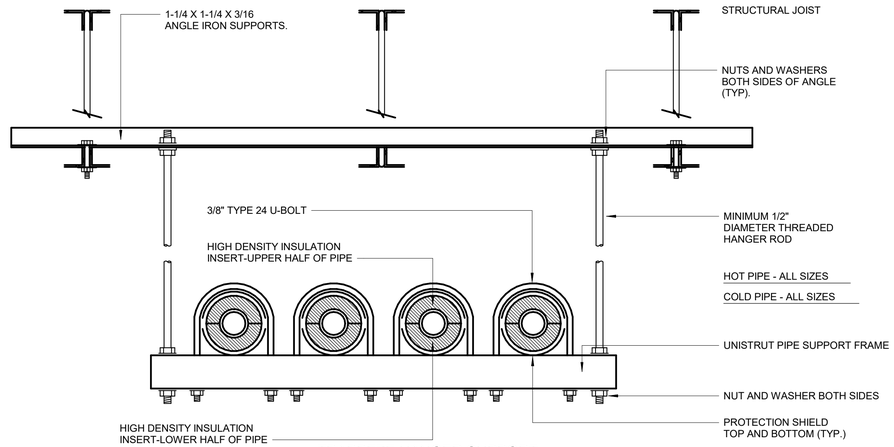

TRAPPEZE HANGER SUPPORT

P-22-0808

WARNING
IT IS A VIOLATION OF SECTION 7209.2 OF THE NEW YORK STATE EDUCATION LAW FOR ANY PERSON, UNLESS ACTING UNDER THE DIRECTION OF A LICENSED PROFESSIONAL ENGINEER, TO ALTER IN ANY WAY PLANS, SPECIFICATIONS, PLATS OR REPORTS TO WHICH THE SEAL OF A PROFESSIONAL ENGINEER HAS BEEN APPLIED. IF AN ITEM BEARING THE SEAL OF A PROFESSIONAL ENGINEER IS ALTERED, THE ALTERING ENGINEER SHALL AFFIX TO THE ITEM HIS SEAL AND THE NOTATION "ALTERED BY" FOLLOWED BY HIS SIGNATURE, THE DATE, AND A SPECIFIC DESCRIPTION OF THE ALTERATION.

REV	ISSUED FOR	DATE	BY

PROJECT ENGINEER:	R. FROST
DESIGNED BY:	M. GIORDANO
DRAWN BY:	J. LURIE
CHECKED BY:	R. VAN DYKE

IF THIS BAR DOES NOT MEASURE 1" THEN DRAWING IS NOT TO FULL SCALE 0 1/2" 1"

BID SET



Hazen
HAZEN AND SAWYER
498 SEVENTH AVENUE, 11th FLOOR
NEW YORK, NEW YORK 10018

WESTCHESTER JOINT WATER WORKS
MAMARONECK, NY

RYE LAKE WATER FILTRATION PLANT
HARRISON, NY

FILTRATION PLANT
PLUMBING
DETAILS - SHEET 3

DATE:	FEB 2025
HAZEN NO.:	90388-000
CONTRACT NO.:	A1364-A
DRAWING NUMBER:	P-604

Autodesk Docs://90388-000_Rye_Lake_Filtration/90388-000-WFP-P.rvt
2/7/2025 2:29:30 PM

ABBREVIATIONS

AD	AREA DRAIN
AFF	ABOVE FINISHED FLOOR
BFP	BACKFLOW PREVENTER
BFV	BUTTERFLY VALVE
BLDG	BUILDING
CFM	CUBIC FEET PER MINUTE
CI	CAST IRON
COL	COLUMN
CF	CUBIC FEET
CLG	CEILING
CU	COPPER
CU FT	CUBIC FEET
CV	CHECK VALVE
CW	COLD WATER
DAF	DISSOLVED AIR FLOTATION
DCDA	DOUBLE CHECK DETECTOR ASSEMBLY BACKFLOW PREVENTER
DFU	DRAINAGE FIXTURE UNIT
DIP	DUCTILE IRON
DIA	DIAMETER
DN	DOWN TO FLOOR BELOW
DWV	DRAIN, WASTE AND VENT
DROP	DROP IN CURRENT VIEW
EL	ELEVATION
FACP	FIRE ALARM CONTROL PANEL
FD	FLOOR DRAIN
FDC	FIRE DEPARTMENT CONNECTION
FT	FEET
FIN	FINISH
FLG	FLANGED
FS	FLOW SWITCH
GPM	GALLONS PER MINUTE
GAL	GALLON
GC	GENERAL CONTRACTOR
GV	GATE VALVE
HP	HORSEPOWER
IN	INCH
IW	INDIRECT WASTE
LB	POUND
MAX	MAXIMUM
MIN	MINIMUM
MSB	MOP SERVICE BASIN
NFPA	NATIONAL FIRE PROTECTION ASSOCIATION
NPW	NON POTABLE WATER
NRS	NON RISING STEM
NTS	NOT TO SCALE
OD	OUTSIDE DIAMETER
OSY	OUTSIDE SCREW AND YOKE
PSI	POUNDS PER SQUARE INCH
PVC	POLY VINYL CHLORIDE
PW	POTABLE WATER
RISE	RISE IN CURRENT VIEW
RPM	REVOLUTIONS PER MINUTE
SAN	SANITARY
SCH	SCHEDULE
SF	SQUARE FOOT
SS	SANITARY SEWER
TYP	TYPICAL
UP	UP TO FLOOR ABOVE
UL	UNDERWRITERS LABORATORY
UR	URINAL
V	VENT
VAC	VACUUM
VB	VACUUM BREAKER
VTR	VENT THROUGH ROOF
WC	WATER CLOSET
WCO	WALL CLEAN OUT
FS	FLOW SWITCH
WT	WEIGHT

LINETYPES

NEW (FIRE PROTECTION)

NEW - BELOW GRADE OR FLOOR SLAB (FIRE PROTECTION)

NEW (NON-FIRE PROTECTION)

SPRINKLER SYSTEM DESIGN CRITERIA

WET SYSTEM - ORDINARY HAZARD GROUP 2

SPRINKLER DESIGN CRITERIA:

A. SPRINKLER SYSTEMS SHALL BE HYDRAULICALLY DESIGNED AND CALCULATED. USE THE RESULTS OF THE HYDRANT FLOW TEST TO PROCUDE THE SYSTEM WATER SUPPLY CURVE. WHEN PERFORMING THE HYDRAULIC CALCULATION, REDUCE THE WATER SUPPLY CURVE BY THE GREATER OF 10 PSI OR 10%.
B. PROVIDE 7 PSI MINIMUM PRESSURE AT SPRINKLER HEADS, OR THE MINIMUM PRESSURE REQUIRED BY THE SPRINKLER HEAD MANUFACTURER, COMPLY WITH ALL UNDERWRITERS' AND CODE AUTHORITIES REQUIREMENTS.
C. WATER FLOW VELOCITY AT THE DESIGN FLOW CONDITION SHALL NOT EXCEED 10 FEET PER SECOND IN ANY PORTION OF THE SYSTEM.
D. PROVIDE THEAPPLICABLE OUTDOOR HOSESTREAM ALLOWANCE FOR THE HAZARD CALCULATED. NO INDOOR HOSE STREAMS ARE REQUIRED.
E. ADD AN ADDITIONAL 500 GPM OF PROCESS WATER DEMAND TO THE HOSE STREAM ALLOWANCE.
F. THE FIRE PROTECTION ENGINEER IS RESPONSIBLE FOR IDENTIFYING REQUIRED DESIGN AREA AND SPRINKLER SPACING/DENSITY ADJUSTMENTS BASED ON THE CEILING TYPE AND LOCAL OBSTRUCTIONS AS REQUIRED BY NFPA 13.
G. NO DESIGN AREA REDUCTIONS ARE PERMITTED BELOW THE MINIMUMS IDENTIFIED ON THIS SHEET (EVEN IF PERMITTED BY NFPA 13).

ORDINARY HAZARD GROUP 2 REQUIRES A MINIMUM SPRINKLER DENSITY OF:
0.2 GPM/SQ.FT OVER 1,500 SQ. FT.

TOTAL DEMAND: 0.2 GPM/SF x 1,500 SF	300 GPM
ESTIMATED HYDRAULIC BUILDUP/OVERAGE (10%)	30 GPM
TOTAL SPRINKLER DEMAND	330 GPM
HOSE STREAM ALLOWANCE	250 GPM
PROCESS WATER DEMAND	500 GPM
TOTAL FLOW DEMAND	1080 GPM
AVAILIBLE PRESSURE AT FLOW DEMAND (BASED ON PRELIMINARY HYDRANT FLOW CURVE)	70 PSIG
AVAILIBLE WITH 10 PSI SUPPLY CURVE REDUCTION	60 PSIG

BUILDING HEIGHT IS 35'-0" WHICH REQUIRES 15 PSIG TO OVERCOME GRAVITY.

TYPICAL SPRINKLER LOSS IS ESTIMATED AT 30 PSIG.

TOTAL FRICTION AND ELEVATION PRESSURE LOSS ESTIMATED AT 45 PSIG.

ADD 5 PSIG CUSHION FOR DESIGN.

TOTAL PRESSURE REQUIRED	50 PSIG

PRELIMINARY HYDRANT FLOW TEST DATA

TEST DATE: 06/17/2021
TEST PERFORMED BY: WESTCHESTER JOINT WATER WORKS

	HYDRANT NUMBER	LOCATION	STATIC PRESSURE (PSIG)	RESIDUAL PRESSURE (PSIG)	FLOW (GPM)
TEST HYDRANT	3503	PURCHASE STREET	80	52	-
FLOW HYDRANT	3504	PURCHASE STREET	-	-	1,918

CALCULATED FLOW AVAILABLE AT 20PSI: 2,895 GPM

NOTES:
1. THE PURCHASE STREET BOOSTER PUMPS WERE ON WHILE THE HYDRANT FLOW TEST WAS BEING PERFORMED.
2. FLOW TEST DATA PROVIDED FOR INFORMATION ONLY. THE CONTRACTOR SHALL BE RESPONSIBLE FOR OBTAINING CURRENT FLOW TEST DATA. THE CONTRACTOR SHALL SCHEDULE AND PAY ALL ASSOCIATED FEES FOR A NEW FLOW TEST.

CLEAN AGENT SYSTEMS DESIGN CRITERIA

CLEAN AGENT VOLUME REQUIREMENTS

ROOM	HAZARD HEIGHT	TEMPERATURE	ROOM AREA	ROOM VOLUME	SAFETY FACTOR	DESIGN CONCENTRATION	TOTAL REQUIRED	AGENT
ELECTRICAL ROOM 119	13' - 0"	50-80°F	1160 SF	15080 CU FT	1.35	6.1%	890 LB	FK-5-1-12
ELECTRICAL ROOM 203	14' - 4"	50-80°F	880 SF	12620 CU FT	1.35	6.1%	740 LB	FK-5-1-12
SCADA ROOM 207	14' - 4"	68-72°F	250 SF	3590 CU FT	1.35	6.1%	210 LB	FK-5-1-12

WARNING
IT IS A VIOLATION OF SECTION 7209.2 OF THE NEW YORK STATE EDUCATION LAW FOR ANY PERSON, UNLESS ACTING UNDER THE DIRECTION OF A LICENSED PROFESSIONAL ENGINEER, TO ALTER IN ANY WAY PLANS, SPECIFICATIONS, PLATS OR REPORTS TO WHICH THE SEAL OF A PROFESSIONAL ENGINEER HAS BEEN APPLIED. IF AN ITEM BEARING THE SEAL OF A PROFESSIONAL ENGINEER IS ALTERED, THE ALTERING ENGINEER SHALL AFFIX TO THE ITEM HIS SEAL AND THE NOTATION "ALTERED BY" FOLLOWED BY HIS SIGNATURE, THE DATE, AND A SPECIFIC DESCRIPTION OF THE ALTERATION.

GENERAL NOTES

1. CONTRACTOR TO ENSURE COMPLIANCE WITH THE REQUIREMENTS OF NFPA, STATE BUILDING/FIRE/PLUMBING CODES, AND THOSE OF ANY CITY, STATE, OR FEDERAL AGENCY HAVING JURISDICTION OVER THIS PROJECT AND FIRE MARSHALL. ALL REFERENCES TO THE FOLLOWING STANDARDS IN THE CONTRACT DOCUMENTS SHALL REFER TO THE APPLICABLE DATES AND VERSIONS BELOW WHERE THEY ARE NOT EXPLICITLY STATED. NOTE THAT THE FOLLOWING LIST IS NOT COMPREHENSIVE AND IS PROVIDED FOR REFERENCE ONLY:

   A. NFPA 13-2016
   B. NFPA 25-2017
   C. NFPA 2001-2015
   D. 2020 BUILDING CODE OF NEW YORK STATE
   E. 2020 FIRE CODE OF NEW YORK STATE
   F. 2020 PLUMBING CODE OF NEW YORK STATE

2. WHERE USED IN THE CONTRACT DOCUMENTS, "DESIGN ENGINEER" SHALL MEAN THE PROFESSIONAL ENGINEER OF RECORD FOR THE BID-PHASE CONTRACT DOCUMENTS. "FIRE PROTECTION ENGINEER" SHALL MEAN THE CONTRACTOR'S PROFESSIONAL ENGINEER OF RECORD FOR THE CONSTRUCTION-PHASE DOCUMENTS. THE FIRE PROTECTION ENGINEER SHALL BE A PROFESSIONAL ENGINEER REGISTERED IN THE STATE OF NEW YORK WITH SUFFICIENT EXPERIENCE IN THE DESIGN OF THE SYSTEMS INCLUDED IN THE CONTRACT DOCUMENTS.
3. THE SPRINKLER SYSTEM INCLUDING INSTALLATION, COMPONENTS, SIZING, SPACING, LOCATION, CLEARANCES, POSITION, AND TYPE OF SYSTEMS SHALL CONFORM TO NFPA 13.
4. PLANS INDICATE GENERAL SCOPE OF WORK. REFER TO CONTRACT DOCUMENTS AND SPECIFICATIONS FOR DETAILS ON ENTIRE SCOPE OF WORK. LOCATIONS OF SPRINKLER OUTLETS, BRANCH LINES AND FEED MAINS ARE DIAGRAMMATIC. THE DRAWINGS ARE NOT MEANT TO SHOW ALL OFFSETS AND PIPING ELEVATIONS TO INSTALL THE PROPOSED SPRINKLER SYSTEM. THE CONTRACTOR SHALL PROVIDE AND INSTALL FINAL SPRINKLER OUTLETS, BRANCHES AND FEED MAINS AS REQUIRED BY APPLICABLE CODES AND THE AHJ.
5. IT SHALL BE THE RESPONSIBILITY OF THE CONTRACTOR TO COORDINATE THE WORK WITH THAT OF ALL OTHER TRADES. THE INSTALLING CONTRACTOR SHALL COORDINATE ALL WORK TO THE EXISTING AND/OR NEW FIELD CONDITIONS.
6. ANY INTERFERENCE SHALL BE BROUGHT TO THE ATTENTION OF THE OWNER'S REPRESENTATIVE AND DESIGN/BUILDER, AND SHALL BE RESOLVED PRIOR TO THE INSTALLATION OF WORK. ANY SIZES OF NEW PIPING SHOWN ON THE PLAN ARE MEANT TO BE A GUIDE FOR ESTIMATING THE WORK.
7. THE FIRE PROTECTION CONTRACTOR SHALL SUBMIT AT LEAST TWO (2) SETS OF FABRICATION DRAWINGS. A PRELIMINARY SET OF FABRICATION DRAWINGS SHALL BE SUBMITTED TO SHOW THE INTENDED DETAILED LAYOUT OF THE SYSTEMS. AN AS-BUILT SET OF FABRICATION DRAWINGS SHALL BE SUBMITTED TO SHOW ANY DEVIATIONS IN THE SYSTEMS FROM THE PRELIMINARY SET. ALL FABRICATION DRAWINGS SHALL BE SIGNED AND SEALED BY THE FIRE PROTECTION ENGINEER.
8. THE FIRE PROTECTION CONTRACTOR SHALL SUBMIT AT LEAST TWO (2) SETS OF ALL CALCULATIONS REQUIRED BY BUILDING CODE AND/OR APPLICABLE NFPA STANDARDS FOR ALL SYSTEMS INCLUDED IN THE CONTRACT DOCUMENTS. A SET OF PRELIMINARY AND AS-BUILT CALCULATIONS SHALL BE SUBMITTED ALONG WITH THE RESPECTIVE FABRICATION DRAWINGS. HYDRAULIC NODES USED IN THE CALCULATIONS SHALL BE SHOWN ON THE FABRICATION DRAWINGS. ALL CALCULATIONS SHALL BE SIGNED AND SEALED BY THE FIRE PROTECTION ENGINEER.
9. FABRICATION DRAWINGS AND CALCULATIONS SHALL BE SUBMITTED TO THE AUTHORITY HAVING JURISDICTION AND INSURANCE UNDERWRITERS PRIOR TO SUBMITTING TO THE DESIGN ENGINEER FOR REVIEW. CONSTRUCTION SHALL NOT COMMENCE UNTIL THE PRELIMINARY FABRICATION DRAWINGS AND CALCULATIONS HAVE BEEN APPROVED BY BOTH THE AHJ AND THE DESIGN ENGINEER.
10. PROVIDE ONE (1) NEW TWO-HYDRANT FLOW TEST AS REQUIRED BY THE AUTHORITY HAVING JURISDICTION AND NFPA. THE HYDRANT FLOW TEST SHALL BE PROVIDED BEFORE CONSTRUCTION BEGINS AND WITHIN A YEAR OF PROJECT CLOSE-OUT UNLESS THE AUTHORITY HAVING JURISDICTION REQUIRES A TEST WITHIN A SHORTER TIMEFRAME. IF MORE THAN A YEAR ELAPSES AFTER THE INITIAL FLOW TEST, THE CONTRACTOR SHALL PROVIDE A NEW FLOW TEST AND UPDATED HYDRAULIC CALCULATIONS SUBJECT TO THE SAME REQUIREMENTS AS THE ORIGINAL DOCUMENTS.

SPRINKLER SYSTEM NOTES

1. THE ENTIRE SPRINKLER SYSTEM SHALL BE DESIGNED AND INSTALLED IN ACCORDANCE WITH NFPA 13 AND NFPA 25.
2. AS PER CHAPTER 6 OF NFPA 13 AND SPECIFICATION SECTION 21 10 00, ONLY APPROVED MATERIALS SHALL BE USED.
3. DIRECT CONNECTION OF SPRINKLERS TO THE PUBLIC WATER SYSTEM SHALL CONFORM TO CHAPTER 23 OF NFPA 13.
4. SPRINKLERS SHALL BE PROTECTED AGAINST FREEZING AND INJURY AS PER SECTION 10.5 OF NFPA 13.
5. INSPECTIONS AND TESTS OF SPRINKLERS SHALL BE CONDUCTED AS PER SECTIONS 10.10.2.2.1 AND 24.2.1.1 OF NFPA 13.
6. THE OCCUPANCY OF THE AREAS TO BE SPRINKLERED IN ACCORDANCE WITH CHAPTER 5 OF NFPA 13 SHALL BE THOSE SPECIFIED ON THE PLANS.
7. MULTIPLE INSPECTOR'S TEST CONNECTIONS OR MULTIPLE FLOOR CONTROL VALVES SHALL BE PROVIDED TO TEST EACH WATERFLOW ALARM DEVICE FOR EACH SYSTEM IN ACCORDANCE WITH SECTION 8.17.4.2.1, FIGURE A.8.17.4.2(a) AND FIGURE A.8.17.4.2(b) OF NFPA 13.
8. PIPING, SPECIFICATIONS, PIPE SCHEDULES, SYSTEM TEST PIPES, PROTECTION AGAINST CORROSION DAMAGE, FITTINGS, VALVES, HANGERS, SPRINKLERS, GUARDS AND SHIELDS SHALL BE IN ACCORDANCE WITH CHAPTERS 6 & 9 OF NFPA 13 AND SPECIFICATION SECTION 21 10 00.
9. STOCK OF SPARE SPRINKLERS AND A SPECIAL SPRINKLER WRENCH SHALL BE FURNISHED AS PER SECTION 6.2.9 OF NFPA 13 AND SPECIFICATION SECTION 21 10 00 (REQUIRED FOR EACH TEMPERATURE RATING).
10. SPRINKLER ALARMS SHALL BE IN ACCORDANCE WITH SECTIONS 6.9 AND 8.17 OF NFPA 13, SPECIFICATION SECTION 21 10 00 AND SECTION 903.4 OF THE BUILDING CODE.
11. ALL CONCEALED SPACES ENCLOSED WHOLLY OR PARTIALLY BY EXPOSED COMBUSTIBLE CONSTRUCTION OR ARE USED FOR THE STORAGE OF COMBUSTIBLE MATERIALS, OR CONTAIN COMBUSTIBLES ASSOCIATED WITH BUILDING SYSTEM FEATURES SUCH AS LARGE BUNDLES OF COMPUTER WIRING OR LARGE QUANTITIES OF NON-METALLIC PIPING, ETC. SHALL BE PROTECTED BY SPRINKLERS EXCEPT IN CONCEALED SPACES WHERE SPRINKLERS ARE NOT REQUIRED TO BE INSTALLED BY SECTIONS 8.15.1.2.1 THROUGH 8.15.1.2.15 OF NFPA 13.
12. ALL PIPING PASSING THROUGH FIRE RATED WALLS AND HORIZONTAL ASSEMBLIES SHALL COMPLY WITH SECTION 712 OF THE BUILDING CODE.
13. DISTANCE OF SPRINKLERS FROM HEAT SOURCES SHALL BE IN ACCORDANCE WITH SECTION 8.3.2 OF NFPA 13.
14. ALL PIPING PASSING THROUGH FOUNDATION WALLS SHALL BE PROTECTED WITH PIPE SLEEVES HAVING CLEARANCES AS PER SECTION 9.3.4 OF NFPA 13.
15. ALL VALVES SHALL BE IDENTIFIED AS REQUIRED BY SECTIONS 6.7.4, 8.16.1.1.8 AND 8.16.1.4.3 OF NFPA 13.
16. DRAINAGE SYSTEM TO CONFORM TO SECTION 8.16.2 OF NFPA 13.
17. PROVIDE ACCESS PANELS AND SIGNAGES FOR CONCEALED SHUT-OFF VALVES.
18. PROVIDE SEAL AGAINST WATER INTRUSION AT PIPE ENTRANCE.

CLEAN AGENT SYSTEM NOTES

1. THE ENTIRE SPRINKLER SYSTEM SHALL BE DESIGNED AND INSTALLED IN ACCORDANCE WITH NFPA 2001.
2. AS PER CHAPTER 4 OF NFPA 2001 AND SPECIFICATION SECTION 21 22 00, ONLY APPROVED MATERIALS SHALL BE USED.
3. INSPECTIONS AND TESTS OF CLEAN AGENT SYSTEMS SHALL BE IN ACCORDANCE WITH CHAPTER 7 OF NFPA 2001AND SPECIFICATION SECTION 21 22 00.
4. THE DESIGN AGENT CONCRENTRATION SHALL BE AS REQUIRED BY NFPA 2001 CHAPTER 5 FOR THE ASSOCIATED HAZARDS PRESENT IN THE PROTECTED AREA.
5. PIPING, SPECIFICATIONS, PIPE SCHEDULES, SYSTEM TEST PIPES, PROTECTION AGAINST CORROSION DAMAGE, FITTINGS, VALVES, HANGERS, NOZZLES AND SILENCERS SHALL BE IN ACCORDANCE WITH CHAPTER 4 OF NFPA 2001 AND SPECIFICATION SECTION 21 22 00.
6. ALARMS SHALL BE IN ACCORDANCE WITH SECTION 4.3 OF NFPA 2001, AND SPECIFICATION SECTION 21 22 00.
7. ALL PIPING PASSING THROUGH FIRE RATED WALLS AND HORIZONTAL ASSEMBLIES SHALL COMPLY WITH SECTION 712 OF THE BUILDING CODE.
8. ALL WARNING AND INSTRUCTION SIGNS SHALL BE PROVIDED AS REQUIRED BY SECTION 4.3.5.5 OF NFPA 2001 AND SPECIFICATION SECTION 21 22 00. PROVIDE IDENTIFICATION SIGNS FOR ALL VALVES AND MAJOR COMPONENTS IN THE SYSTEM.
9. PROVIDE ACCESS PANELS AND SIGNAGES FOR CONCEALED SHUT-OFF VALVES.

CLEAN AGENT SEQUENCE OF OPERATIONS

SYSTEM SEQUENCE OF OPERATION SHALL BE PRE-SET AT THE FACTORY AND PERFORM THE FOLLOWING:

1. DURING NORMAL CONDITIONS, THE RELEASING PANEL SHALL SEND A CONTINUOUS STATUS SIGNAL TO THE BUILDING FACP INDICATING THE STATUS OF THE INERT GAS SYSTEM. THE TWO STATES OF THIS SIGNAL SHALL BE "READY" WHEN NO ISSUE IS DETECTED AND "TROUBLE" WHEN THE PANEL'S TROUBLE RELAY IS ACTIVATED FOR ANY REASON. A TROUBLE SIGNAL SHALL ACTIVATE FOUR SYSTEM IMPAIRMENT ALARMS. THREE SUCH ALARMS SHALL ACTIVATE IN THE PROTECTED SPACES, ONE IN SCADA ROOM (207),ONE IN ELECTRICAL ROOM (203) AND ONE IN ELECTRICAL ROOM (119). A FOURTH ALARM SHALL ACTIVATE LOCAL TO THE RELEASING PANEL IN HVAC ROOM (208). DEACTIVATION OF IMPAIRMENT ALARMS SHALL ONLY BE POSSIBLE BY MANUAL ACKNOWLEDGEMENT AT THE RELEASING PANEL.
2. THE ACTIVATION OF ANY SINGLE AUTOMATIC DETECTION DEVICE ASSOCIATED WITH THE INERT GAS SYSTEM SHALL SEND A SIGNAL TO THE RELEASING PANEL, WHICH SHALL PERFORM THE FOLLOWING OPERATIONS:

   A. ENERGIZE THE PRE-DISCHARGE TIMER (NOT TO EXCEED 30 SECONDS) AND OPERATE AUXILIARY FUNCTIONS
   B. ACTIVATE PRE-DISCHARGE ALARMS LOCAL TO THE RELEASING PANEL IN HVAC ROOM (208). THESE ALARMS SHALL REMAIN ACTIVATED UNTIL THE INERT GAS CHARGE HAS BEEN RELEASED, OR UNTIL MANUALLY DISABLED AT THE RELEASING PANEL.
   C. ACTIVATE EVACUATION ALARMS IN ALL THREE PROTECTED SPACES. THESE ALARMS SHALL REMAIN ACTIVATED UNTIL MANUALLY DISABLED AT THE RELEASING PANEL.
   D. ACTIVATE DISCHARGE WARNING ALARMS AT THE ENTRANCES TO ALL THREE PROTECTED SPACES. THESE ALARMS SHALL REMAIN ACTIVATED UNTIL MANUALLY DISABLED AT THE RELEASING PANEL.
   E. SEND A PRE-DISCHARGE ALARM SIGNAL TO THE FACP.
   F. HVAC EQUIPMENT WITHIN THE PROTECTED SPACE IN WHICH DETECTION EQUIPMENT WAS ACTIVATED, AUTOMATIC DAMPERS, AND AIR HANDLING UNITS SERVING THAT SPACE SHALL BE SHUTDOWN BY OTHER EQUIPMENT.

3. DURING THE PRE-DISCHARGE COUNTDOWN, ACTUATION OF THE ABORT BUTTON(S) ALLOWS THE PRE-DISCHARGE TIMER TO COUNTDOWN NORMALLY, BUT STOPS AND HOLDS AT 10 SECONDS UNTIL THE RELEASE OF THE ABORT. SUCCESSIVE ABORTS ARE POSSIBLE. FULL SYSTEM DEACTIVATION SHALL ONLY BE ACHIEVED BY KEY MAINTENANCE BYPASS SWITCH(ES) WITH KEY REMOVABLE ONLY IN THE NORMAL POSITION. DURING THESE CONDITIONS, THE RELEASING PANEL SHALL PERFORM THE FOLLOWING OPERATIONS:

   A. ACTUATION OF THE ABORT BUTTON(S) SHALL ACTIVATE FOUR SYSTEM IMPAIRMENT ALARMS. THREE SUCH ALARMS SHALL ACTIVATE IN THE PROTECTED SPACES, ONE IN SCADA ROOM (207), ONE IN ELECTRICAL ROOM (203) AND ONE IN ELECTRICAL ROOM (119). A FOURTH ALARM SHALL ACTIVATE LOCAL TO THE RELEASING PANEL IN HVAC ROOM (208). THE RELEASING PANEL SHALL SEND A "RELEASE DELAYED" STATUS SIGNAL TO THE FACP. DEACTIVATION OF IMPAIRMENT ALARMS SHALL ONLY BE POSSIBLE BY MANUAL ACKNOWLEDGEMENT AT THE RELEASING PANEL.
   B. ACTUATION OF THE KEY BYPASS SWITCH SHALL ACTIVATE FOUR SYSTEM IMPAIRMENT ALARMS. THREE SUCH ALARMS SHALL ACTIVATE IN THE PROTECTED SPACES, ONE IN SCADA ROOM (207), ONE IN ELECTRICAL ROOM (203) AND ONE IN ELECTRICAL ROOM (119). A FOURTH ALARM SHALL ACTIVATE LOCAL TO THE RELEASING PANEL IN HVAC ROOM (208). .. A FOURTH ALARM SHALL ACTIVATE LOCAL TO THE RELEASING PANEL IN HVAC ROOM (208). THE RELEASING PANEL SHALL SEND A "RELEASE PREVENTED" STATUS SIGNAL TO THE FACP. DEACTIVATION OF IMPAIRMENT ALARMS SHALL ONLY BE POSSIBLE BY MANUAL ACKNOWLEDGEMENT AT THE RELEASING PANEL.

4. IF THE PRE-DISCHARGE TIMER REACHES 0, THE RELEASING PANEL SHALL PERFORM THE FOLLOWING OPERATIONS:

   A. ACTIVATE THE PRIMARY RELEASE UNIT AND ZONE SELECTOR VALVE TO DISCHARGE THE INERT GAS SYSTEM INTO THE SPACE IN WHICH RELEASING OR DETECTION EQUIPMENT WAS ACTUATED..
   B. ACTIVATE DISCHARGE ALARMS IN ROOMS HVAC ROOM (208) AND THE SPACE IN WHICH DETECTION EQUIPMENT WAS ACTIVATED. THESE ALARMS SHALL REMAIN ACTIVATED UNTIL MANUALLY DISABLED AT THE RELEASING PANEL.
   C. SEND A DISCHARGE ALARM SIGNAL TO THE FACP.
   D. OPERATE AUXILIARY FUNCTIONS

5. ACTIVATION OF A MANUAL ACTIVATION STATION SHALL HAVE THE SAME EFFECT AS ACTIVATION OF AN AUTOMATIC DETECTION DEVICE (ITEM 2).

DOUBLE-INTERLOCK PREACTION SPRINKLER SEQUENCE OF OPERATIONS

SYSTEM SEQUENCE OF OPERATION SHALL BE PRE-SET AT THE FACTORY AND PERFORM THE FOLLOWING:

1. THE PREACTION PANEL SHALL SEND A CONTINUOUS STATUS SIGNAL TO THE BUILDING FACP INDICATING THE STATUS OF THE PREACTION SYSTEM.
2. IN THE THE "SET" CONDITION, THE PREACTION VALVE'S PNEUMATIC ACTUATOR SHALL BE HELD CLOSED BY BOTH SUPERVISORY PRESSURE MAINTAINED DOWNSTREAM OF THE PREACTION VALVE AND A NORMALLY CLOSED ELECTRIC SOLENOID VALVE.
3. THE "TROUBLE" CONDITION SHALL INITIATE IF A SPRINKLER OPENS PRIOR TO THE OPERATION OF THE DETECTION SYSTEM, ANY TIME SUPERVISORY PRESSURE DOWNSTREAM OF THE PREACTION VALVE IS LOST OR ANY TIME THE ELECTRIC SOLENOID IS OPENED WITHOUT AN ACTUATION SIGNAL FROM DETECTION DEVICES IN THE PROTECTED SPACES. IN THE "TROUBLE" CONDITION, THE PREACTION VALVE DOES NOT OPEN, AND TWO ALARMS SHALL ACTIVATE.ONE ALARM SHALL ACTIVATE IN THE PROTECTED SPACE SCADA ROOM (207). A SECOND ALARM SHALL ACTIVATE LOCAL TO THE PREACTION PANEL IN HVAC ROOM (208). DEACTIVATION OF TROUBLE ALARMS SHALL ONLY BE POSSIBLE BY MANUAL ACKNOWLEDGEMENT AT THE PREACTION PANEL.
4. THE "FIRE" CONDITION SHALL INITAITE ONLY WHEN BOTH THE SUPERVISORY PRESSURE IS RELIEVED AND THE ELECTRIC SOLENOID VALVE OPENS. THE ACTION OF BOTH OF THESE EVENTS OCCURING AT THE SAME TIME SHALL OPEN THE PREACTION VALVE. THE PREACTION VALVE SHALL OPEN WHETHER THE "FIRE" CONDITION IS PRECEEDED BY A "SET" OR "TROUBLE" CONDITION.
5. THE "MANUAL OPERATION" CONDITION SHALL INITIATE WHEN THE EMERGENCY RELEASE HANDLE IN THE PREACTION PANEL IS PULLED. IN THE "MANUAL OPERATION" CONDITION, THE PREACTION VALVE SHALL OPEN.
6. IN ANY CONDITION, WATER SHALL ONLY FLOW INTO THE PROTECTED SPACE IF ONE OR MORE PREACTION SPRINKLER HEAD IS OPENED AND THE PREACTION VALVE IS OPENED.

REV	ISSUED FOR	DATE	BY

PROJECT ENGINEER:	R. FROST
DESIGNED BY:	M. GIORDANO
DRAWN BY:	R. CHIN
CHECKED BY:	R. VAN DYKE

IF THIS BAR DOES NOT MEASURE 1" THEN DRAWING IS NOT TO FULL SCALE 0 1/2" 1"

BID SET



Hazen
HAZEN AND SAWYER
498 SEVENTH AVENUE, 11th FLOOR
NEW YORK, NEW YORK 10018

WESTCHESTER JOINT WATER WORKS
MAMARONECK, NY

RYE LAKE WATER FILTRATION PLANT
HARRISON, NY

FILTRATION PLANT
FIRE PROTECTION
GENERAL NOTES, SYMBOLS AND ABBREVIATIONS

DATE:	FEB 2025
HAZEN NO.:	90388-000
CONTRACT NO.:	A1364-A
DRAWING NUMBER:	FP-001

Autodesk Docs://90388-000_Rye_Lake_Filtration/90388-000-WFP-P.rvt
2/7/2025 2:31:27 PM

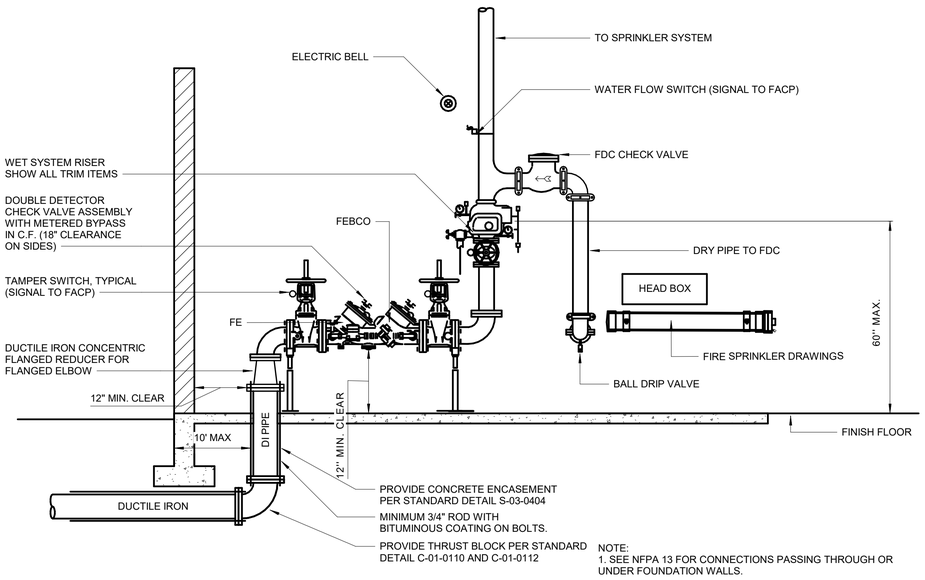

NOTE:
1. SEE NFPA 13 FOR CONNECTIONS PASSING THROUGH OR UNDER FOUNDATION WALLS.

WET SYSTEM SPRINKLER RISER

P-21-0102

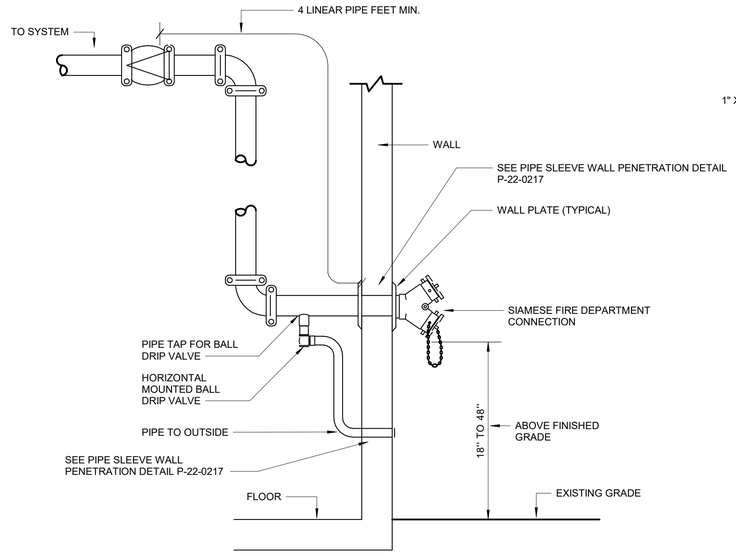

FLUSH FIRE DEPARTMENT CONNECTION

P-21-0105

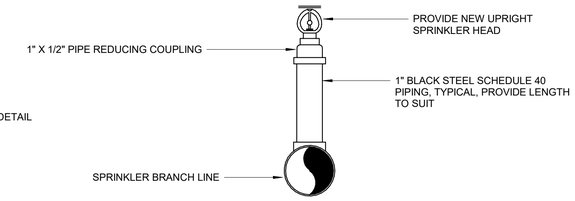

UPRIGHT HEAD

P-21-0113

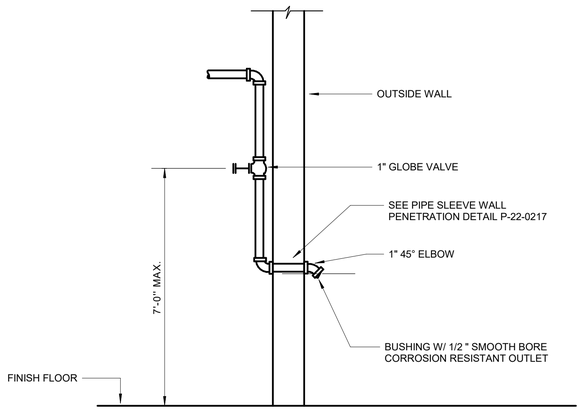

WET SYSTEM INSPECTOR'S TEST STATION

P-21-0117

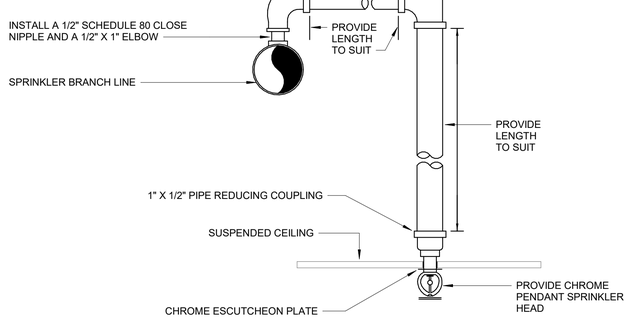

NOTES:
1. ADJUST SPRINKLER DROPS AS NECESSARY TO CLEAR OBSTRUCTIONS SUCH AS THE CEILING "T" BAR SUSPENSION SYSTEM, LIGHT FIXTURES, ETC. PROVIDE A PIPE HANGER IF THE HORIZONTAL OFFSET LENGTH EXCEEDS 24 INCHES.
2. THIS SPRINKLER HEAD DROP IS APPLICABLE ONLY WHERE IT IS NOT NECESSARY TO RETAIN AN UPRIGHT SPRINKLER FOR PROTECTION OF COMBUSTIBLE CONSTRUCTION ABOVE THE CEILING.

PENDANT & UPRIGHT HEAD

P-21-0114

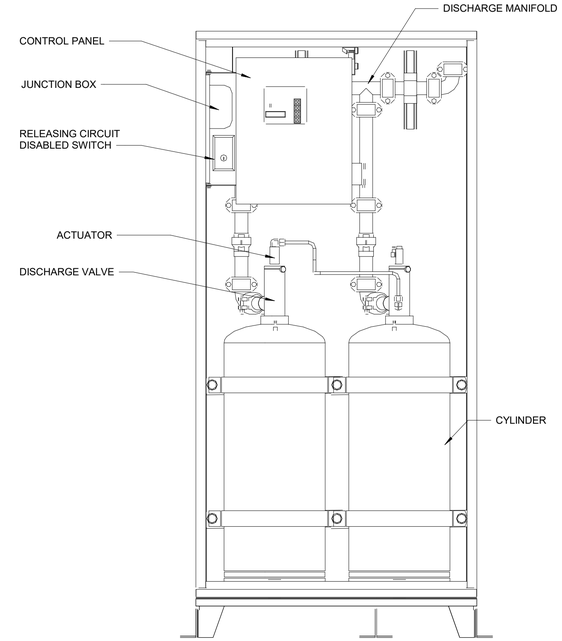

CLEAN AGENT CABINET

P-21-0115

WARNING
IT IS A VIOLATION OF SECTION 7209.2 OF THE NEW YORK STATE EDUCATION LAW FOR ANY PERSON, UNLESS ACTING UNDER THE DIRECTION OF A LICENSED PROFESSIONAL ENGINEER, TO ALTER IN ANY WAY PLANS, SPECIFICATIONS, PLATS OR REPORTS TO WHICH THE SEAL OF A PROFESSIONAL ENGINEER HAS BEEN APPLIED. IF AN ITEM BEARING THE SEAL OF A PROFESSIONAL ENGINEER IS ALTERED, THE ALTERING ENGINEER SHALL AFFIX TO THE ITEM HIS SEAL AND THE NOTATION "ALTERED BY" FOLLOWED BY HIS SIGNATURE, THE DATE, AND A SPECIFIC DESCRIPTION OF THE ALTERATION.

REV	ISSUED FOR	DATE	BY

PROJECT ENGINEER:	R. FROST
DESIGNED BY:	M. GIORDANO
DRAWN BY:	R. CHIN
CHECKED BY:	R. VAN DYKE

IF THIS BAR DOES NOT MEASURE 1" THEN DRAWING IS NOT TO FULL SCALE 0 1/2" 1"

BID SET

STATE OF NEW YORK · MARC A. GIORDANO · 099858 · PROFESSIONAL ENGINEER

Hazen
HAZEN AND SAWYER
498 SEVENTH AVENUE, 11th FLOOR
NEW YORK, NEW YORK 10018

WESTCHESTER JOINT WATER WORKS
MAMARONECK, NY

RYE LAKE WATER FILTRATION PLANT
HARRISON, NY

FILTRATION PLANT
FIRE PROTECTION
DETAILS - SHEET 1

DATE:	FEB 2025
HAZEN NO.:	90388-000
CONTRACT NO.:	A1364-A
DRAWING NUMBER:	FP-002

Autodesk Docs://90388-000_Rye_Lake_Filtration/90388-000-WFP-P.rvt
2/7/2025 2:31:27 PM

PLANT NORTH

NOTES:

1. THE WORK OF OTHER DISCIPLINES IS HIDDEN OR HALF-TONE FOR CLARITY. REFER TO CONTRACT DRAWINGS OF OTHER DISCIPLINES FOR ADDITIONAL WORK BY OTHERS.

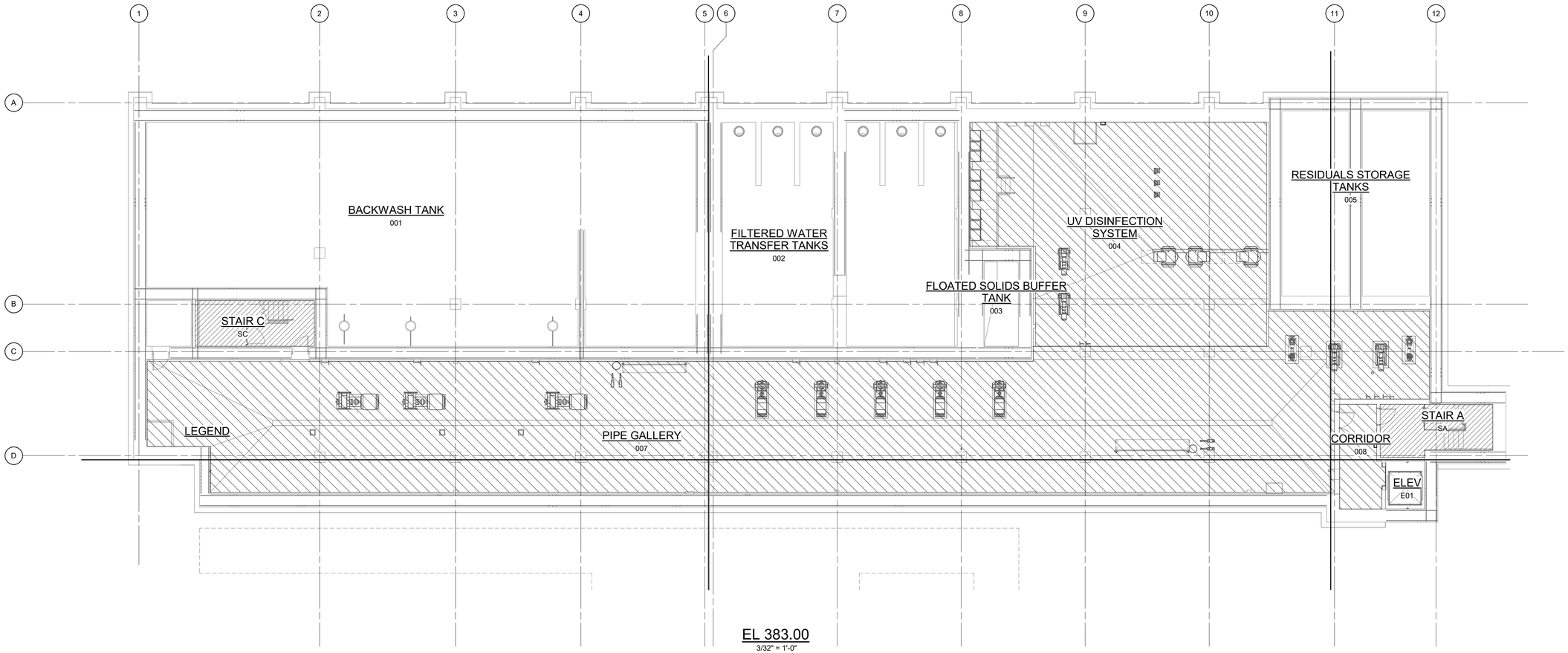

EL 383.00
3/32" = 1'-0"

LEGEND

WET SPRINKLER SYSTEM - LIGHT HAZARD OCCUPANCY

WET SPRINKLER SYSTEM - ORDINARY HAZARD GROUP 2 OCCUPANCY

WARNING
IT IS A VIOLATION OF SECTION 7209.2 OF THE NEW YORK STATE EDUCATION LAW FOR ANY PERSON, UNLESS ACTING UNDER THE DIRECTION OF A LICENSED PROFESSIONAL ENGINEER, TO ALTER IN ANY WAY PLANS, SPECIFICATIONS, PLATS OR REPORTS TO WHICH THE SEAL OF A PROFESSIONAL ENGINEER HAS BEEN APPLIED. IF AN ITEM BEARING THE SEAL OF A PROFESSIONAL ENGINEER IS ALTERED, THE ALTERING ENGINEER SHALL AFFIX TO THE ITEM HIS SEAL AND THE NOTATION "ALTERED BY" FOLLOWED BY HIS SIGNATURE, THE DATE, AND A SPECIFIC DESCRIPTION OF THE ALTERATION.

3/32" = 1'-0" 10 8 6 4 2 0 11'

REV	ISSUED FOR	DATE	BY

PROJECT ENGINEER:	R. FROST
DESIGNED BY:	M. GIORDANO
DRAWN BY:	R. CHIN
CHECKED BY:	R. VAN DYKE

IF THIS BAR DOES NOT MEASURE 1" THEN DRAWING IS NOT TO FULL SCALE 0 1/2" 1"

BID SET

MARC A. GIORDANO — STATE OF NEW YORK — 099858 — PROFESSIONAL ENGINEER

Hazen
HAZEN AND SAWYER
498 SEVENTH AVENUE, 11th FLOOR
NEW YORK, NEW YORK 10018

WESTCHESTER JOINT WATER WORKS
MAMARONECK, NY

RYE LAKE WATER FILTRATION PLANT
HARRISON, NY

FILTRATION PLANT FIRE PROTECTION EL. 383.00 - OVERALL PLAN

DATE:	FEB 2025
HAZEN NO.:	90388-000
CONTRACT NO.:	A1364-A
DRAWING NUMBER:	FP-100

Autodesk Docs://90388-000_Rye_Lake_Filtration/90388-000-WFP-P.rvt
2/7/2025 2:31:29 PM

PLANT NORTH

HYDROFLUOROSILICIC ACID
101

SODIUM HYPOCHLORITE
102

COAGULANT
103

CORROSION INHIBITOR
104

POLYMER/ SOFTENER (FUTURE)
105

SODIUM HYDROXIDE
107

FILTERED WATER PUMPING AND DAF ROOM
106

RESIDUALS STORAGE TANKS
005

DEWATERING ROOM
109

EXIT PASSAGEWAY
124

STAIR C
SC

CORRIDOR
C02

EQUIPMENT PLATFORM
123

DAF TANKS
122

STAIR A
SA

ELEV
E01

FIRE DEPARTMENT CONNECTION

KNOX BOX

FIRE SPRINKLER RISER ROOM
110

FIRE SPRINKLER RISER SEE DETAIL FP-21-0102

CONFERENCE ROOM
111

LOBBY
112

VESTIBULE
113

MAINT CLO
114

CORRIDOR
C01

WOMENS BATHROOM
115

MENS BATHROOM
117

ELECTRICAL
119

ELECTRICAL 119 IS SERVED BY CLEAN AGENT CABINET IN HVAC ROOM 215

RAW WATER PIPING
120

STAIR B
SB

NOTES:

1. THE WORK OF OTHER DISCIPLINES IS HIDDEN OR HALF-TONE FOR CLARITY. REFER TO CONTRACT DRAWINGS OF OTHER DISCIPLINES FOR ADDITIONAL WORK BY OTHERS.

LEGEND

- WET SPRINKLER SYSTEM - LIGHT HAZARD OCCUPANCY
- WET SPRINKLER SYSTEM - ORDINARY HAZARD GROUP 2 OCCUPANCY
- CLEAN AGENT SYSTEM

WARNING
IT IS A VIOLATION OF SECTION 7209.2 OF THE NEW YORK STATE EDUCATION LAW FOR ANY PERSON, UNLESS ACTING UNDER THE DIRECTION OF A LICENSED PROFESSIONAL ENGINEER, TO ALTER IN ANY WAY PLANS, SPECIFICATIONS, PLATS OR REPORTS TO WHICH THE SEAL OF A PROFESSIONAL ENGINEER HAS BEEN APPLIED. IF AN ITEM BEARING THE SEAL OF A PROFESSIONAL ENGINEER IS ALTERED, THE ALTERING ENGINEER SHALL AFFIX TO THE ITEM HIS SEAL AND THE NOTATION "ALTERED BY" FOLLOWED BY HIS SIGNATURE, THE DATE, AND A SPECIFIC DESCRIPTION OF THE ALTERATION.

EL 407.00 - OVERALL PLAN

3/32" = 1'-0"

10 8 6 4 2 0 11'

3/32" = 1'-0"

REV	ISSUED FOR	DATE	BY

PROJECT ENGINEER:	R. FROST
DESIGNED BY:	M. GIORDANO
DRAWN BY:	R. CHIN
CHECKED BY:	R. VAN DYKE
IF THIS BAR DOES NOT MEASURE 1" THEN DRAWING IS NOT TO FULL SCALE	0 1/2" 1"

BID SET

MARC A. GIORDANO — STATE OF NEW YORK — 099858 — PROFESSIONAL ENGINEER

Hazen
HAZEN AND SAWYER
498 SEVENTH AVENUE, 11th FLOOR
NEW YORK, NEW YORK 10018

WESTCHESTER JOINT WATER WORKS
MAMARONECK, NY

RYE LAKE WATER FILTRATION PLANT
HARRISON, NY

FILTRATION PLANT
FIRE PROTECTION
EL. 407.00 - OVERALL PLAN

DATE:	FEB 2025
HAZEN NO.:	90388-000
CONTRACT NO.:	A1364-A
DRAWING NUMBER:	FP-101

Autodesk Docs://90388-000_Rye_Lake_Filtration/90388-000-WFP-P.rvt
2/7/2025 2:31:36 PM

PLANT NORTH

NOTES:

1. THE WORK OF OTHER DISCIPLINES IS HIDDEN OR HALF-TONE FOR CLARITY. REFER TO CONTRACT DRAWINGS OF OTHER DISCIPLINES FOR ADDITIONAL WORK BY OTHERS.

HYDROFLUOROSILICIC ACID (OPEN TO LOWER LEVEL)

SODIUM HYPOCHLORITE (OPEN TO LOWER LEVEL)

COAGULANT (OPEN TO LOWER LEVEL)

CORROSION INHIBITOR (OPEN TO LOWER LEVEL)

POLYMER/ SOFTENER (FUTURE) (OPEN TO LOWER LEVEL)

CORRIDOR (OPEN TO LOWER LEVEL)

FILTERED WATER PUMPING AND DAF ROOM (OPEN TO LOWER LEVEL)

SODIUM HYDROXIDE (OPEN TO LOWER LEVEL)

CORRIDOR

STOR RM 216

STAIR S02

HVAC 201

AIR SCOUR 202

ELECTRICAL ROOM 203

PROCESS ANALYSIS ROOM 205

CONTROL ROOM 206

SCADA ROOM 207

HVAC 208

DEWATERING ROOM (OPEN TO LOWER LEVEL)

COPY ROOM 209

1x164LB CYLINDER ASSEMBLY WITH 140LBS NOVEC CLEAN AGENT IN 29"x24"x77" CABINET. SERVES SCADA ROOM 207. SEE DETAIL FP-21-0115.

PREACTION SPRINKLER SYSTEM RISER CABINET

INSPECTOR TEST STATION. SEE DETAIL P-21-0117

INSPECTOR TEST STATION. SEE DETAIL P-21-0117

1x850LBS CYLINDER WITH 611LBS NOVEC 1230 CLEAN AGENT IN 58"x54"x81" CABINET. SERVES ELECTRICAL ROOM 203. SEE DETAIL FP-21-0115. COORDINATE INSTALLTION WITH HVAC DUCTWORK

STAIR A SA

CHIEF'S OFFICE 210

ELEV E01

CORRIDOR 211

MAINT CLO 212

OPEN OFFICE 214

WC 213

OPERATING LEVEL 218

HVAC 215

CORRIDOR C04

STAIR B SB

2x601 LBS CYLINDER WITH 432LBS NOVEC 1230 CLEAN AGENT PER CYLINDER IN 50"x46"x77" CABINET. SERVES ELECTRICAL ROOM 119. SEE DETAIL FP-21-0115.

RAW WATER PIPING (OPEN TO LOWER LEVEL)

LEGEND

- WET SPRINKLER SYSTEM - LIGHT HAZARD OCCUPANCY
- WET SPRINKLER SYSTEM - ORDINARY HAZARD GROUP 2 OCCUPANCY
- CLEAN AGENT SYSTEM
- CLEAN AGENT SYSTEM AND DOUBLE-INTERLOCK PREACTION SPRINKLER SYSTEM - LIGHT HAZARD OCCUPANCY

WARNING
IT IS A VIOLATION OF SECTION 7209.2 OF THE NEW YORK STATE EDUCATION LAW FOR ANY PERSON, UNLESS ACTING UNDER THE DIRECTION OF A LICENSED PROFESSIONAL ENGINEER, TO ALTER IN ANY WAY PLANS, SPECIFICATIONS, PLATS OR REPORTS TO WHICH THE SEAL OF A PROFESSIONAL ENGINEER HAS BEEN APPLIED. IF AN ITEM BEARING THE SEAL OF A PROFESSIONAL ENGINEER IS ALTERED, THE ALTERING ENGINEER SHALL AFFIX TO THE ITEM HIS SEAL AND THE NOTATION "ALTERED BY" FOLLOWED BY HIS SIGNATURE, THE DATE, AND A SPECIFIC DESCRIPTION OF THE ALTERATION.

EL 421.00 - OVERALL PLAN

3/32" = 1'-0"

3/32" = 1'-0" 10 8 6 4 2 0 11'

REV	ISSUED FOR	DATE	BY

PROJECT ENGINEER:	R. FROST
DESIGNED BY:	M. GIORDANO
DRAWN BY:	R. CHIN
CHECKED BY:	R. VAN DYKE
IF THIS BAR DOES NOT MEASURE 1" THEN DRAWING IS NOT TO FULL SCALE	0 1/2" 1"

BID SET

MARC A. GIORDANO — STATE OF NEW YORK — 099858 — PROFESSIONAL ENGINEER

Hazen
HAZEN AND SAWYER
498 SEVENTH AVENUE, 11th FLOOR
NEW YORK, NEW YORK 10018

WESTCHESTER JOINT WATER WORKS
MAMARONECK, NY

RYE LAKE WATER FILTRATION PLANT
HARRISON, NY

FILTRATION PLANT
FIRE PROTECTION
EL. 421.00 - OVERALL PLAN

DATE:	FEB 2025
HAZEN NO.:	90388-000
CONTRACT NO.:	A1364-A
DRAWING NUMBER:	FP-102

Autodesk Docs://90388-000_Rye_Lake_Filtration/90388-000-WFP-P.rvt
2/7/2025 2:31:39 PM

LIGHTING:

X DENOTES FIXTURE TYPE (TYP.)
SEE SPECIFICATION 26 50 00/16500 FOR FIXTURE SCHEDULE
# DENOTES CIRCUIT NUMBER (TYP.)

RECTANGULAR FIXTURE

LEFT: CEILING MOUNTED FIXTURE
RIGHT: WALL MOUNTED FIXTURE

EMERGENCY WALL-MOUNTED FIXTURE:
LEFT: STANDARD
RIGHT: REMOTE-HEAD

LEFT: CEILING MOUNTED EXIT SIGN
RIGHT: WALL MOUNTED EXIT SIGN
SHADED PORTION DENOTES SIGN FACE

POLE-MOUNTED FIXTURE

PHOTOCELL

LEFT: CEILING MOUNTED OCCUPANCY SENSOR
RIGHT: WALL MOUNTED OCCUPANCY SENSOR
X DENOTES TYPE

RECEPTACLES:

X DENOTES RECEPTACLE TYPE (TYP.):
GFCI DENOTES GROUND FAULT CIRCUIT INTERRUPT
UPS DENOTES UNINTERRUPTIBLE POWER SUPPLY
WPCR DENOTES WEATHERPROOF CORROSION RESISTANT
# DENOTES CIRCUIT NUMBER (TYP.)

RECEPTACLES:
LEFT: SIMPLEX
MIDDLE: DUPLEX
RIGHT: QUADRUPLEX

MULTI-OUTLET RECEPTACLE:
LEFT: SIMPLEX
RIGHT: DUPLEX

OTHER RECEPTACLES:
LEFT: 240 VOLT
RIGHT: SPECIAL PURPOSE

FLOOR-MOUNTED RECEPTACLES:
LEFT: SIMPLEX
MIDDLE: DUPLEX
RIGHT: QUADRUPLEX

HVAC AND FIRE ALARM

FIRE ALARM CONTROL PANEL

FIRE ALARM ANNUNCIATOR PANEL

FIRE ALARM PULL STATION

FIRE ALARM INDICATOR:
X DENOTES ALERT TYPE (TYP.):
A DENOTES AUDIBLE
V DENOTES VISIBLE (# DENOTES STROBE INTENSITY)

DUCT SMOKE DETECTOR

SMOKE DETECTOR:
X DENOTES TYPE:
Z DENOTES IONIZATION
P DENOTES PHOTOELECTRIC
T DENOTES THERMAL

HEAT DETECTOR

THERMOSTAT

AMBIENT TEMPERATURE TRANSMITTER

SMOKE BEAM REFLECTOR

SMOKE BEAM DETECTOR

SWITCHES

WALL SWITCH:
X DENOTES TYPE:
NO SUBSCRIPT DENOTES SINGLE-POLE SWITCH
3 DENOTES 3-WAY SWITCH
4 DENOTES 4-WAY SWITCH
M DENOTES MANUAL MOTOR STARTER
# DENOTES CIRCUIT NUMBER
WPCR DENOTES WEATHERPROOF CORROSION RESISTANT

COMBINATION MOTOR STARTER

DISCONNECT SWITCH

LOCAL CONTROL STATION

WARNING
IT IS A VIOLATION OF SECTION 7209.2 OF THE NEW YORK STATE EDUCATION LAW FOR ANY PERSON, UNLESS ACTING UNDER THE DIRECTION OF A LICENSED PROFESSIONAL ENGINEER, TO ALTER IN ANY WAY PLANS, SPECIFICATIONS, PLATS OR REPORTS TO WHICH THE SEAL OF A PROFESSIONAL ENGINEER HAS BEEN APPLIED. IF AN ITEM BEARING THE SEAL OF A PROFESSIONAL ENGINEER IS ALTERED, THE ALTERING ENGINEER SHALL AFFIX TO THE ITEM HIS SEAL AND THE NOTATION "ALTERED BY" FOLLOWED BY HIS SIGNATURE, THE DATE, AND A SPECIFIC DESCRIPTION OF THE ALTERATION

ELEMENTARY CONTROL SCHEMATICS

3-POSITION SELECTOR SWITCH:
HOA DENOTES HAND/OFF/AUTO
LOR DENOTES LOCAL/OFF/REMOTE
FOR DENOTES FORWARD/OFF/REVERSE

PUSHBUTTON SWITCHES:
LEFT: N.O.
RIGHT: N.C.
TEXT DENOTES LEGEND PLATE

EMERGENCY STOP MUSHROOM HEAD PUSHBUTTON SWITCH (N.C.):
TEXT DENOTES LEGEND PLATE

PUSHBUTTON SWITCH N.C. WITH LOCK-OUT:
TEXT DENOTES LEGEND PLATE

SELECTOR SWITCH:
LEFT: STANDARD
RIGHT: SPRING-RETURN
TEXT DENOTES LEGEND PLATE

SOLID-STATE OVERLOAD RELAY

THERMAL OVERLOAD RELAY

	NO	NC
DISCONNECT SWITCHES		
CONTACTS	X	X
TORQUE SWITCH	–	NS
LIMIT SWITCHES	LS	LS

NOTATION LEGEND:
NO/NC: NORMALLY OPEN/CLOSED
RO/RC: RISE-TO-OPEN/CLOSE
FO/FC: FALL-TO-OPEN/CLOSE
TO/TC: TIME-OPEN/CLOSE

CONTACTS:
TEXT DENOTES COIL ID

SWITCHES:
TEXT DENOTES TAG NUMBER

	NORC	NOFC	NCRO	NCFO
TEMPERATURE SWITCHES/ THERMOSTATS	TS	–	TS	–
PRESSURE SWITCHES	PS	PS	PS	PS
LEVEL SWITCHES	LS	LS	LS	LS
FLOW SWITCHES	FS	FS	FS	FS

	NOTC	NOTO	NCTO	NCTC
TIME DELAY CONTACTS	TD	TD	TD	TD

INDICATOR LIGHT:
LEFT: STANDARD/RIGHT: PUSH-TO-TEST
X DENOTES COLOR

RUN TIME METER

SOLENOID VALVE

MOTOR PROTECTION RELAY

CONTROL POWER TRANSFORMER

MECHANICAL INTERLOCK CONNECTION

MOTOR SPACE HEATER

COIL:
X DENOTES TYPE:
M DENOTES MOTOR STARTER
CR DENOTES CONTROL RELAY
TD DENOTES TIME DELAY RELAY
TR DENOTES TIMER RANGE
TS DENOTES TIMER SETPOINT
PR DENOTES INTERPOSING PILOT RELAY
LC DENOTES LIGHTING CONTACTOR
Y DENOTES REFERENCE LINE NUMBER

EQUIPMENT/DEVICE LOCATION SYMBOLS

LOCATED IN MCC

LOCATED IN STAND-ALONE MOTOR STARTER/CONTROLLER

LOCATED IN FIELD

LOCATED AT PANEL:
X DENOTES PANEL ID:
L DENOTES LOCAL CONTROL STATION

SINGLE-LINE DIAGRAMS

500kW
480V,3Ø,4W
GENERATOR

XFMR
kVA
480-120/208V
3P/4W
DRY TRANS
TRANSFORMER

PROTECTIVE RELAY:
NUMBER DENOTES IEEE DEVICE FUNCTION

100A
FUSE

100A
3P
100A
FUSED DISCONNECT SWITCH

30A
3P
DISCONNECT SWITCH

FUSED DISCONNECT SWITCH

800AF
800AP
800AT
LSIGZ
CTR
N.C.
LOW VOLTAGE POWER CIRCUIT BREAKER:
LEFT: FIXED-MOUNT
RIGHT: DRAWOUT
E.O. DENOTES ELECTRICALLY OPERATED
LSIG DENOTES INSTALLED TRIP FUNCTIONS:
L DENOTES LONG-TIME
S DENOTES SHORT-TIME
I DENOTES INSTANTANEOUS
G DENOTES GROUND FAULT
Z DENOTES ZONE-SELECTIVE INTERLOCKING
CTR DENOTES BREAKER-SPECIFIC CT AND RATIOS

1200A
52
N.C.
E.O.
BATT.
MEDIUM VOLTAGE DRAWOUT POWER CIRCUIT BREAKER:
E.O. DENOTES ELECTRICALLY OPERATED
BATT. DENOTES BATTERY BACKUP POWER

100AF
100AT
800AF
800AP
800AT
LSIG
ETU
LOW VOLTAGE MOLDED CASE CIRCUIT BREAKER
LEFT: THERMAL-MAGNETIC TRIP UNIT
RIGHT: ELECTRONIC TRIP UNIT

MCP
MOTOR CIRCUIT PROTECTOR

GROUND

600:5
(3)
CT:
NUMBERS DENOTE CT WINDING RATIO AND CT QUANTITY

50:5
(1)
GFCT:
NUMBERS DENOTE GFCT WINDING RATIO AND GFCT QUANTITY

480:120
(3)
PT:
NUMBERS DENOTE PT WINDING VOLTAGES AND PT QUANTITY

DRAW-OUT ELEMENT

X
X
LEFT: PANELBOARD
RIGHT: COMBINATION POWER UNIT
X DENOTES PANEL ID

SURGE ARRESTOR

CLF
CURRENT LIMITING FUSE

VCP
VENDOR CONTROL PANEL

ST
SHUNT TRIP

SPD
XXXkA
SURGE PROTECTIVE DEVICE

SINGLE-LINE DIAGRAMS, CONT'D.

#%
LEFT: RESISTOR
RIGHT: LINE REACTOR
#% DENOTES IMPEDANCE

CAPACITOR

K
KIRK-KEY INTERLOCK

TSH MSH CF
HP RPM
TE ME
MOTOR AND TYPICAL ADDITIONAL DEVICES:
TSH: TEMPERATURE SWITCH
MSH: MOTOR SPACE HEATER
CF: COOLING FAN
TE: TEMPERATURE ELEMENT
ME: MOISTURE DETECTOR

XXXYYYYY
INSTRUMENT TAG:
X DENOTES INSTRUMENT TYPE
Y DENOTES INSTRUMENT NUMBER
SEE DRAWING I1 FOR INSTRUMENT ABBREVIATIONS

100AF 100AT 5% 6 PULSE VFD
100AF 100AT 5% 6 PULSE VFD
100A MCP X OC
LEFT: VFD WITH LINE REACTOR
RIGHT: VFD WITH LINE REACTOR AND BYPASS STARTER
X DENOTES NEMA SIZE

MCP 6P VFD
100AF 100AT FILTER 6P VFD
ETU 400AF 400AP 400AT LSI 18P VFD RVSS
LEFT: VFD
MIDDLE: VFD WITH HARMONIC FILTER
RIGHT: VFD WITH RVSS BYPASS

A MCP X
MCP M F R X
LEFT: FVNR STARTER:
X DENOTES NEMA SIZE
DP DENOTES DEFINITE PURPOSE CONTACTOR
RIGHT: FVR STARTER

SECURITY

SW	MAGNETIC MONITOR SWITCH
CR	CARD READER
EL	ELECTRIC LOCKSETS
V	VIDEO CAMERA
M	SCREEN MONITOR
REX	EMBEDDED REQUEST TO EXIT
NVR	NETWORK VIDEO RECORDER
P	PAGING
S	SPEAKER
AC	ACCESS SYSTEM CONTROLLER

SINGLE-LINE DIAGRAMS, CONT'D.

ATS
480V, 800A
3Ø 4W 4P
65kA
OPEN TRANSITION
CONTACTOR-STYLE ATS OR MTS

ATS
480V, 800A
3Ø 4W 4P
65kA
OPEN TRANSITION
CONTACTOR-STYLE ATS OR MTS WITH OFF POSITION

100AF
100AT
ATS
480V, 800A
3Ø 4W 4P
65kA
OPEN TRANSITION
CONTACTOR-STYLE ATS OR MTS, SERVICE-ENTRANCE RATED

ATS
480V, 800AF/800AT
3Ø 4W 4P
65kA
OPEN TRANSITION
MCCB-STYLE ATS OR MTS

ATS
480V, 800AF/800AT
3Ø 4W 4P
65kA
OPEN TRANSITION
DRAWOUT CB-STYLE ATS OR MTS

MISC PLAN VIEW SYMBOLS

EQUIPMENT CONNECTION

GROUND RODS:
LEFT: BURIED
RIGHT: IN TESTWELL

DBXX
EXX
DUCTBANK SECTION CUT IDENTIFIER:
DBXX DENOTES DUCTBANK ID
EXX DENOTES DRAWING NUMBER WHERE SECTION CUT IS LOCATED

X
DUCTBANK TAG:
X DENOTES DUCTBANK ID

X Y
CABLE TRAY TAG:
X DENOTES CABLE TRAY ID
Y DENOTES SCHEDULE REFERENCE

X #
INSTRUMENT TAG:
X DENOTES INSTRUMENT TYPE
# DENOTES INSTRUMENT NUMBER
SEE DRAWING I1 FOR INSTRUMENT ABBREVIATIONS

P-XXXX
P-XXX-XXX
CONDUIT TAGS:
P DENOTES POWER
C DENOTES CONTROL
I DENOTES INSTRUMENTATION
XXXX DENOTES CONDUIT ID
XXX-XXX DENOTES CONDUIT ID

COMMUNICATIONS

TELEPHONE OR NETWORK DROP

FLOOR-MOUNTED TELEPHONE OR NETWORK DROP

WIRING

FLEXIBLE CONDUIT

CONDUIT EXPOSED

CONDUIT CONCEALED

CONCRETE ENCASED DUCTBANK

CONCRETE ENCASED CONDUIT

DIRECT BURIED CONDUIT

LEFT: CONDUIT RISE (TURN UP)
RIGHT: CONDUIT DROP (TURN DOWN)

REV	ISSUED FOR	DATE	BY

PROJECT ENGINEER: R. FROST
DESIGNED BY: Y. ABDALLA
DRAWN BY: Y. ABDALLA
CHECKED BY: G. MARKOU
IF THIS BAR DOES NOT MEASURE 1" THEN DRAWING IS NOT TO FULL SCALE 0 1/2" 1"

BID SET

STATE OF NEW YORK · GEORGE MARKOU · 022603 · LICENSED PROFESSIONAL ENGINEER

Hazen
HAZEN AND SAWYER
498 SEVENTH AVENUE, 11th FLOOR
NEW YORK, NEW YORK 10018

WESTCHESTER JOINT WATER WORKS
MAMARONECK, NY

RYE LAKE WATER FILTRATION PLANT
HARRISON, NY

ELECTRICAL
LEGENDS, AND SYMBOLS

DATE: FEB 2025
HAZEN NO.: 90388-000
CONTRACT NO.: A1364-A
DRAWING NUMBER: E-001

File: C:\USERS\APENA\DOCACCDOCS\HAZEN AND SAWYER\90388-000_RYE_LAKE_FILTRATION\PROJECT FILES\PROJECTWISE\ELECTRICAL\E-001 Saved by APENA Save date: 4/15/2025 3:26 PM
PLOT DATE: 4/15/2025 3:36 PM BY: APENA

ABBREVIATIONS

ADR	ADDRESSABLE RELAY
AE	ANALYSIS ELEMENT
AEM	ASSEMBLIES ELECTRONIC MONITOR (MONITORS LVTU'S)
AFG	ABOVE FINISHED GRADE
AHU	AIR HANDLING UNIT
AIC	AMPERE INTERRUPTING CAPACITY
AIT	ANALYSIS INDICATING TRANSMITTER
ANSI	AMERICAN NATIONAL STANDARDS INSTITUTE
ASCE	AMERICAN SOCIETY OF CIVIL ENGINEERS
ASME	AMERICAN SOCIETY OF MECHANICAL ENGINEERS
AF	AMPERE FRAME
AT	AMPERE TRIP
ATS	AUTOMATIC TRANSFER SWITCH
BC	BYPASS CONTACTOR
BIM	BREAKER INTERFACE MODULE
BKR	BREAKER
CBMM	CIRCUIT BREAKER METERING MODULE (FOR FEEDER BREAKERS
CED	CENTRAL ENERGY DISPLAY (MONITORS CBMM'S)
CLF	CURRENT LIMITING FUSE
CMU	CENTRAL MONITORING UNIT (MONITORS MMS')
CPT	CONTROL POWER TRANSFORMER
CT	CURRENT TRANSFORMER
DB	DUCTBANK
DSW	DISCONNECT SWITCH
EHH	ELECTRIC HAND HOLE
EMH	ELECTRIC MANHOLE
EO	ELECTRICALLY OPERATED
ETM	ELAPSED TIME METER
FAAP	FIRE ALARM ANNUNCIATOR PANEL
FACP	FIRE ALARM CONTROL PANEL
FS	FLOW SWITCH
FSL	FLOW SWITCH LOW
FVNR	FULL VOLTAGE NON-REVERSING
FVR	FULL VOLTAGE REVERSING
GFCI	GROUND FAULT CIRCUIT INTERRUPTER
GFCT	GROUND FAULT CURRENT TRANSFORMER
GNG	GO-NO GO
GND	GROUND
HOA	HAND-OFF-AUTO
HPU	HYDRAULIC POWER UNIT
IC	INPUT CONTACTOR
IEEE	INSTITUTE OF ELECTRICAL AND ELECTRONICS ENGINEERS
ISO	INTERNATIONAL ORGANIZATION FOR STANDARDIZATION
JB	JUNCTION BOX
LCP	LOCAL CONTROL PANEL
LCS	LOCAL CONTROL STATION
LP	LIGHTING PANEL
LS	LEVEL SWITCH
LSL	LEVEL SWITCH LOW
LSLL	LEVEL SWITCH LOW-LOW
LSH	LEVEL SWITCH HIGH
LSHH	LEVEL SWITCH HIGH-HIGH
LT	LEVEL TRANSMITTER
LVTU	LOW VOLTAGE TRIP UNIT
MAP	METERING AND PROTECTION
MCC	MOTOR CONTROL CENTER
MFR	MULTI-FUNCTION RELAY
MH	MANHOLE
MMP	METER MONITOR & PROTECTION
MMS	MICROPROCESSOR MOTOR STARTER
MOD	MOTOR OPERATED DAMPER
MOG	MOTOR OPERATED GATE

ABBREVIATIONS, CONT.

MOL	MOTOR OPERATED LOUVER
MOV	MOTOR OPERATED VALVE
MPR	MOTOR PROTECTION RELAY
MTD	MOUNTED
MTS	MANUAL TRANSFER SWITCH
MWTS	MOTOR WINDING TEMPERATURE SWITCH
NC	NORMALLY CLOSED
NEC	NATIONAL ELECTRICAL CODE
NEMA	NATIONAL ELECTRICAL MANUFACTURERS ASSN
NFPA	NATIONAL FIRE PROTECTION ASSOCIATION
NO	NORMALLY OPEN
NTS	NOT TO SCALE
NWP	NETWORK PROTECTOR
OC	OUTPUT CONTACTOR
OL	OVERLOAD
PB	PULLBOX
PC	PHOTOCELL
PIT	PRESSURE INDICATING TRANSMITTER
PLC	PROGRAMMABLE LOGIC CONTROLLER
PP	POWER PANEL
PST	PHASE SHIFTING TRANSFORMER
PT	POTENTIAL TRANSFORMER
PTT	PUSH TO TEST
PV	PHOTOVOLTAIC
R	END-OF-LINE RESISTOR
RCS	REMOTE CONTROL STATION
RECP	RECEPTACLE
RIO	REMOTE I/O
RM	ROOM
RTD	RESISTANCE THERMAL DEVICE
RVAT	REDUCED VOLTAGE AUTO TRANSFORMER
RVSS	REDUCED VOLTAGE SOLID STATE
S.E.	SERVICE ENTRANCE
SMM	SUB METER MODULE
SP. C.	SPARE CONDUIT
SPD	SURGE PROTECTIVE DEVICE
SST	STAINLESS STEEL
SWGR	SWITCHGEAR
TB	TEST BLOCK
TC	TIMED CLOSE
TO	TIMED OPEN
TSH	TWISTED SHIELDED
TYP	TYPICAL
UPS	UNINTERRUPTIBLE POWER SUPPLY
VCP	VENDOR CONTROL PANEL
VFD	VARIABLE FREQUENCY DRIVE
VIF	VERIFY IN FIELD
WPCR	WEATHER PROOF CORROSION RESISTANT
WT	WEIGHT
XFMR	TRANSFORMER

NOTES:

1. THE INSTALLATION OF ALL CONCRETE ENCASED ELECTRICAL CONDUITS SHALL COMPLY WITH ACI 318, SECTION 20.7. CONTRACTOR SHALL SUPPLY EXPANSION JOINT FITTINGS AS REQUIRED FOR THERMAL EXPANSION AND DEFLECTION.
2. BOND ALL NEW CONCRETE ENCASED GROUND CONDUCTORS TO EXISTING GROUND CONDUCTORS IN ALL MANHOLES, PULL BOXES, CABLE TRAYS, AND SIMILAR LOCATIONS WHERE APPLICABLE.
3. UNLESS OTHERWISE SPECIFIED OR NOTED, ALL WALL MOUNTED ELECTRICAL PANELS, ENCLOSURES, AND SIMILAR EQUIPMENT SHALL BE MOUNTED 6'-6" (MAX) FROM THE TOP OF THE PANEL TO FINISHED FLOOR OR GRADE.
4. UNLESS OTHERWISE NOTED, ALL LIGHTING SWITCHES, CONTROL SWITCHES, AND SIMILAR EQUIPMENT SHALL BE MOUNTED WITH THEIR CENTERLINE APPROXIMATELY 4'-0" ABOVE FINISHED FLOOR, SLAB, OR GRADE.
5. A SEPARATE EQUIPMENT GROUNDING CONDUCTOR SHALL BE PROVIDED FOR EACH CIRCUIT (SEPARATE CONDUCTOR IN THE CONDUIT). THE CONDUCTOR SHALL BE TERMINATED AT THE PROPER DEVICE, TERMINAL, OR LUG AT THE POWER SOURCE (MCC GROUND BUS, PANELBOARD GROUND BUS, ETC.). GROUND CONDUCTOR SIZE SHALL BE PER THE LATEST EDITION OF THE NEC.
6. LIGHTNING PROTECTION SYSTEMS SHALL BE PROVIDED FOR THE STRUCTURES INDICATED ON THE DRAWINGS AND IN ACCORDANCE WITH SECTION 26 41 13.
7. FIRE ALARM SYSTEMS SHALL BE PROVIDED FOR THE STRUCTURES INDICATED ON THE DRAWINGS AND IN ACCORDANCE WITH SECTION 28 46 20.
8. REFERENCE SECTION 01 73 12 FOR CONSTRUCTION SEQUENCING REQUIREMENTS.
9. CONDUIT HOMERUNS ARE NOT SHOWN ON THE DRAWINGS. CONTRACTOR SHALL REFER TO CONDUIT AND WIRE SCHEDULES, RISER DIAGRAMS, SINGLE LINE DIAGRAMS, AND OTHER DRAWINGS FOR CONDUIT AND WIRE REQUIREMENTS.
10. ALL POWER CONDUITS ARE SHOWN DIAGRAMMATICALLY. EXACT ROUTING SHALL BE DETERMINED BY THE CONTRACTOR IN THE FIELD, EXCEPT WHERE SPECIFICALLY DIMENSIONED ON PLANS.
11. EXACT CONDUIT STUB-UP LOCATIONS SHALL BE DETERMINED BY THE CONTRACTOR BASED ON THE CERTIFIED MANUFACTURER'S DRAWINGS OF THE RESPECTIVE EQUIPMENT. CONDUITS SHALL BE INSTALLED COMMENSURATE WITH THE EQUIPMENT FURNISHED.
12. ALL ELECTRICAL NON-STRUCTURAL COMPONENTS ARE SUBJECT TO SEISMIC DESIGN CATEGORY 'B' AND ARE THEREFORE EXEMPT FROM SEISMIC ANCHORAGE AND BRACING AS STIPULATED IN SECTION 01 73 23 - SEISMIC ANCHORAGE AND BRACING.
13. ALL ELECTRICAL WORK MUST BE DONE IN ACCORDANCE WITH NFPA 70E.

WARNING
IT IS A VIOLATION OF SECTION 7209.2 OF THE NEW YORK STATE EDUCATION LAW FOR ANY PERSON, UNLESS ACTING UNDER THE DIRECTION OF A LICENSED PROFESSIONAL ENGINEER, TO ALTER IN ANY WAY PLANS, SPECIFICATIONS, PLATS OR REPORTS TO WHICH THE SEAL OF A PROFESSIONAL ENGINEER HAS BEEN AFFIXED. IF AN ITEM BEARING THE SEAL OF A PROFESSIONAL ENGINEER IS ALTERED, THE ALTERING ENGINEER SHALL AFFIX TO THE ITEM HIS SEAL AND THE NOTATION "ALTERED BY" FOLLOWED BY HIS SIGNATURE, THE DATE, AND A SPECIFIC DESCRIPTION OF THE ALTERATION.

REV	ISSUED FOR	DATE	BY

PROJECT ENGINEER:	R. FROST
DESIGNED BY:	Y. ABDALLA
DRAWN BY:	Y. ABDALLA
CHECKED BY:	G. MARKOU

IF THIS BAR DOES NOT MEASURE 1" THEN DRAWING IS NOT TO FULL SCALE 0 1/2" 1"

BID SET

STATE OF NEW YORK · GEORGE MARKOU · 072603 · LICENSED PROFESSIONAL ENGINEER

Hazen
HAZEN AND SAWYER
498 SEVENTH AVENUE, 11th FLOOR
NEW YORK, NEW YORK 10018

WESTCHESTER JOINT WATER WORKS
MAMARONECK, NY

RYE LAKE WATER FILTRATION PLANT
HARRISON, NY

ELECTRICAL
GENERAL NOTES & ABBREVIATIONS

DATE:	FEB 2025
HAZEN NO.:	90388-000
CONTRACT NO.:	A1364-A
DRAWING NUMBER:	E-002

File: C:\USERS\APENA\DCACCDOCS\HAZEN AND SAWYER\90388-000_RYE_LAKE_FILTRATION\PROJECT FILES\PROJECTWISE\ELECTRICAL\E-002 Saved by APENA Save date: 4/15/2025 3:26 PM
PLOT DATE: 4/15/2025 3:37 PM BY: APENA

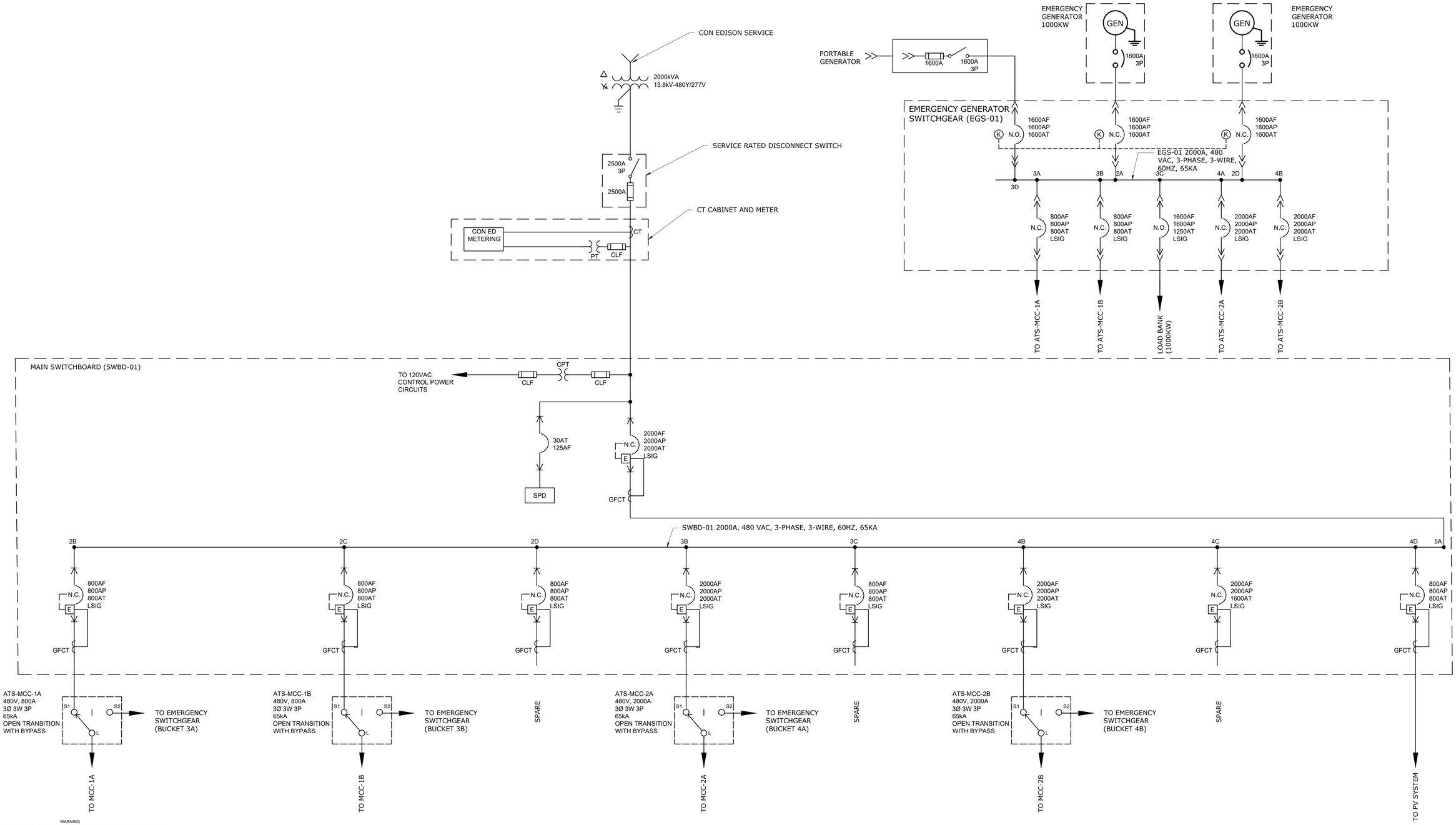

WARNING
IT IS A VIOLATION OF SECTION 7209.2 OF THE NEW YORK STATE EDUCATION LAW FOR ANY PERSON, UNLESS ACTING UNDER THE DIRECTION OF A LICENSED PROFESSIONAL ENGINEER, TO ALTER IN ANY WAY PLANS, SPECIFICATIONS, PLATS OR REPORTS TO WHICH THE SEAL OF A PROFESSIONAL ENGINEER HAS BEEN APPLIED. IF AN ITEM BEARING THE SEAL OF A PROFESSIONAL ENGINEER IS ALTERED, THE ALTERING ENGINEER SHALL AFFIX TO THE ITEM HIS SEAL AND THE NOTATION "ALTERED BY" FOLLOWED BY HIS SIGNATURE, THE DATE, AND A SPECIFIC DESCRIPTION OF THE ALTERATION.

REV	ISSUED FOR	DATE	BY

PROJECT ENGINEER:	R. FROST
DESIGNED BY:	Y. ABDALLA
DRAWN BY:	Y. ABDALLA
CHECKED BY:	G. MARKOU
IF THIS BAR DOES NOT MEASURE 1" THEN DRAWING IS NOT TO FULL SCALE	0 1/2" 1"

BID SET

Hazen
HAZEN AND SAWYER
498 SEVENTH AVENUE, 11th FLOOR
NEW YORK, NEW YORK 10018

WESTCHESTER JOINT WATER WORKS
MAMARONECK, NY

RYE LAKE WATER FILTRATION PLANT
HARRISON, NY

ELECTRICAL
OVERALL SINGLE LINE DIAGRAM

DATE:	FEB 2025
HAZEN NO.:	90388-000
CONTRACT NO.:	A1364-A
DRAWING NUMBER:	E-003

File: C:\USERS\APENA\DCACCDOCS\HAZEN AND SAWYER\90388-000_RYE_LAKE_FILTRATION\PROJECT FILES\PROJECTWISE\ELECTRICAL\E-003 Saved by APENA Save date: 4/15/2025 2:28 PM
PLOT DATE: 4/15/2025 3:37 PM BY: APENA

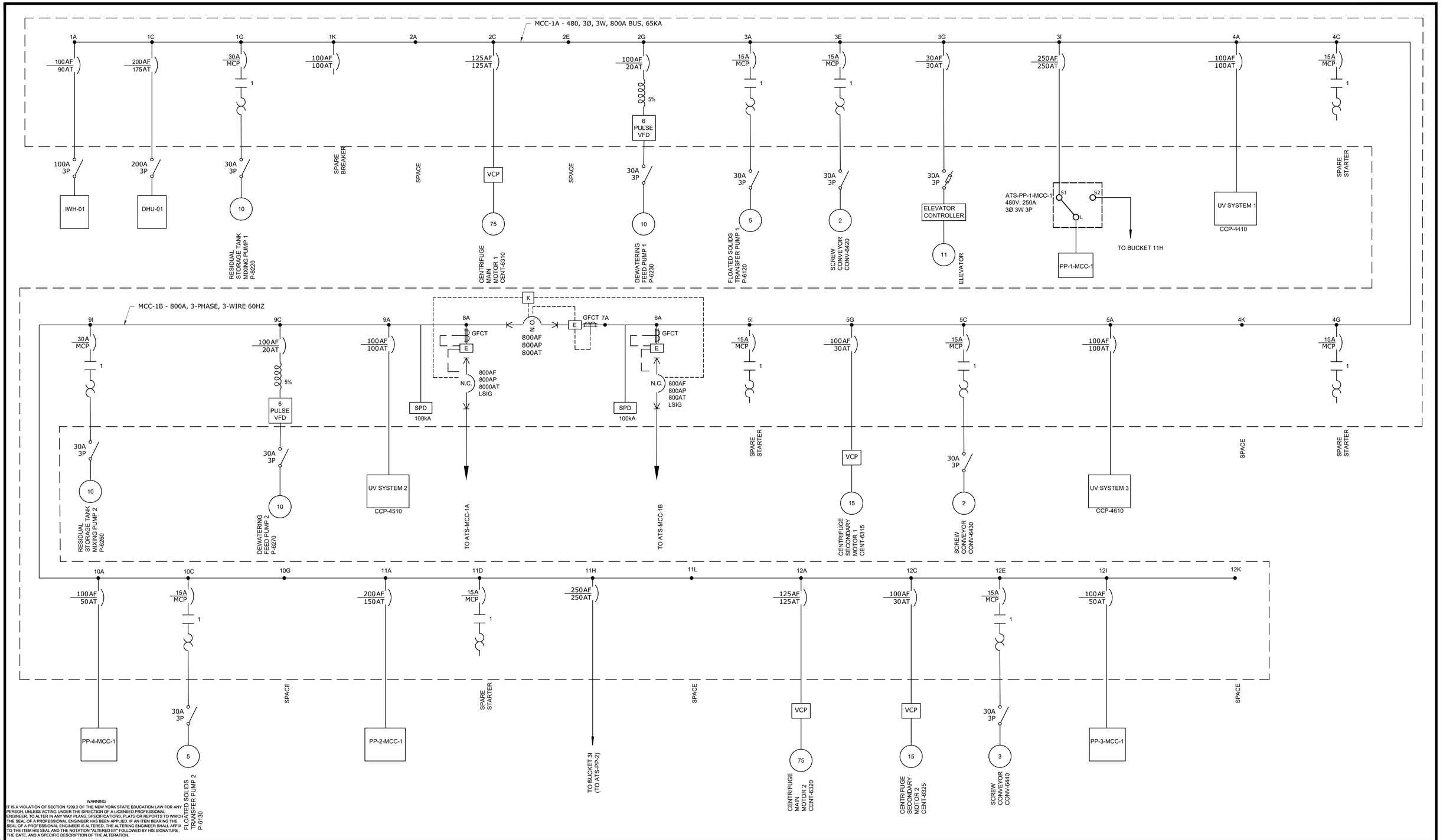

WARNING
IT IS A VIOLATION OF SECTION 7209.2 OF THE NEW YORK STATE EDUCATION LAW FOR ANY PERSON, UNLESS ACTING UNDER THE DIRECTION OF A LICENSED PROFESSIONAL ENGINEER, TO ALTER IN ANY WAY PLANS, SPECIFICATIONS, PLATS OR REPORTS TO WHICH THE SEAL OF A PROFESSIONAL ENGINEER HAS BEEN APPLIED. IF AN ITEM BEARING THE SEAL OF A PROFESSIONAL ENGINEER IS ALTERED, THE ALTERING ENGINEER SHALL AFFIX TO THE ITEM HIS SEAL AND THE NOTATION "ALTERED BY" FOLLOWED BY HIS SIGNATURE, THE DATE, AND A SPECIFIC DESCRIPTION OF THE ALTERATION.

REV	ISSUED FOR	DATE	BY

PROJECT ENGINEER:	R. FROST
DESIGNED BY:	Y. ABDALLA
DRAWN BY:	R. CHUNG
CHECKED BY:	G. MARKOU
IF THIS BAR DOES NOT MEASURE 1" THEN DRAWING IS NOT TO FULL SCALE	0 1/2" 1"

BID SET

STATE OF NEW YORK · GEORGE MARKOU · 022603 · LICENSED PROFESSIONAL ENGINEER

Hazen

HAZEN AND SAWYER
498 SEVENTH AVENUE, 11th FLOOR
NEW YORK, NEW YORK 10018

WESTCHESTER JOINT WATER WORKS
MAMARONECK, NY

RYE LAKE WATER FILTRATION PLANT
HARRISON, NY

ELECTRICAL
MCC-1 SINGLE LINE DIAGRAM

DATE:	FEB 2025
HAZEN NO.:	90388-000
CONTRACT NO.:	A1364-A
DRAWING NUMBER:	E-004

File: C:\USERS\APENA\DC\ACCDOCS\HAZEN AND SAWYER\90388-000_RYE_LAKE_FILTRATION\PROJECT FILES\PROJECTWISE\ELECTRICAL\E-004 Saved by APENA Save date: 4/15/2025 2:36 PM
PLOT DATE: 4/15/2025 3:37 PM BY: APENA

480, 3Ø, 3W, 2000A BUS, 65KA

MCC-2A

1A 150AF 150AT — PP-3-MCC-2

1C 100AF 20AT — 5% — 6 PULSE VFD — 30A 3P — 1.5 — FLOCCULATOR 1 A-2120

1H 400AF 225AT — 225AF 225AT — 5% — 6 PULSE VFD — 400A 3P — 150 — FILTERED WATER PUMP 3 P-4230

2A 100AF 20AT — 5% — 6 PULSE VFD — 30A 3P — 1.5 — FLOCCULATOR 3 A-2220

2F 100AF 20AT — 5% — 6 PULSE VFD — 30A 3P — 1.5 — FLOCCULATOR 5 A-2320

2K 100AF 100AT — SPARE BREAKER

3A 100AF 20AT — 5% — 6 PULSE VFD — 30A 3P — 1.5 — FLOCCULATOR 7 A-2420

3F — SPACE

3K 100AF 100AT — PP-5-MCC-2

4A 100AF 20AT — 5% — 6 PULSE VFD — 30A 3P — 1.5 — FLOCCULATOR 9 A-2520

4F 200AF 200AT — 200AF 200AT — 5% — 6 PULSE VFD — 200A 3P — 125 — FILTER BACKWASH PUMP 3 P-7430

4I 250AF 250AT — ATS-PP-1-MCC2 480V, 250A 3Ø 3W 3P — S1 S2 L — PP-1-MCC-2 — TO BUCKET 40A

5A 100AF 20AT — 5% — 6 PULSE VFD — 30A 3P — 1.5 — FLOCCULATOR 11 A-2620

5F 15A MCP — 1 — 30A 3P — 5 — HOT WATER PUMP HWP-01

5J — SPACE

6A 250AF 250AT — ATS-PP-2-MCC2 480V, 250A 3Ø 3W 3P — S1 S2 L — PP-2-MCC-2 — TO BUCKET 39F

6E 400AF 225AT — 225AF 225AT — 5% — 6 PULSE VFD — 400A 3P — 150 — FILTERED WATER PUMP 1 P-4210

11I — SPACE

11E 100AF 20AT — 5% — 6 PULSE VFD — 30A 3P — 1.5 — FLOCCULATOR 13 A-2720

11A 200AF 200AT — 200AF 200AT — 5% — 6 PULSE VFD — 200A 3P — 100 — DAF RECYCLE PUMP 4 P-7240

10I — SPACE

10D 100AF 20AT — 5% — 6 PULSE VFD — 30A 3P — 0.5 — DAF SKIMMER 3 SKMR-3391

10A 250AF 250AT — SPARE BREAKER

9I 250AF 250AT — SPARE BREAKER

9D 100AF 20AT — 5% — 6 PULSE VFD — 30A 3P — 0.5 — DAF SKIMMER 1 SKMR-3191

9A 250AF 250AT — SPARE BREAKER

8A 600A MCP — RVSS — 400A 3P — 200 — AIR SCOUR BLOWER BL-7110

7I 250AF 250AT — SPARE BREAKER

7E 7A MCP — 1 — 30A 3P — 2 — SUPPLY FAN SF-1

7D — SPACE

7A 200AF 200AT — 200AF 200AT — 5% — 6 PULSE VFD — 200A 3P — 125 — FILTER BACKWASH PUMP 1 P-7410

6J — SPACE

12A — SPACE

12D 150A MCP — 4 — SPARE STARTER

12I 50A MCP — 2 — 30A 3P — 15 — WASTE WASH WATER MIXER 1 MX-7530

13A 100AF 50AT — SPARE BREAKER

13C 100AF 100AT — 100A 3P — BRIDGE CRANE FILTER WATER PUMPING AND DAF ROOM 106

13E — SPACE

13H 400AF 225AT — 225AF 225AT — 5% — 6 PULSE VFD — 400A 3P — 150 — FILTERED WATER PUMP 5 P-4320

14A 100AF 50AT — 5% — 6 PULSE VFD — 60A 3P — 30 — WASTE WASH WATER RECYCLE PUMP 1 P-7510

14H 200AF 200AT — 200AF 200AT — 5% — 6 PULSE VFD — 200A 3P — 100 — DAF RECYCLE PUMP 3 P-7230

14K — SPACE

15A 100AF 50AT — 5% — 6 PULSE VFD — 60A 3P — 30 — WASTE WASH WATER RECYCLE PUMP 3 P-7560

15H 100AF 20AT — 5% — 6 PULSE VFD — 30A 3P — 0.5 — DAF SKIMMER 5 SKMR-3591

16A 200AF 200AT — SPARE BREAKER

16E 15A MCP — 1 — 30A 3P — 3 — PACL TRANSFER PUMP 1 P-5230

16I 15A MCP — 1 — 30A 3P — 3 — NAOH TRANSFER PUMP 1 P-5330

17A 15A MCP — 1 — 30A 3P — 3 — PHA TRANSFER PUMP 1 P-5430

17E 200AF 200AT — SPARE BREAKER

17I — SPACE

CONTINUED ON DRAWING E-006

WARNING
IT IS A VIOLATION OF SECTION 7209.2 OF THE NEW YORK STATE EDUCATION LAW FOR ANY PERSON, UNLESS ACTING UNDER THE DIRECTION OF A LICENSED PROFESSIONAL ENGINEER, TO ALTER IN ANY WAY PLANS, SPECIFICATIONS, PLATS OR REPORTS TO WHICH THE SEAL OF A PROFESSIONAL ENGINEER HAS BEEN APPLIED. IF AN ITEM BEARING THE SEAL OF A PROFESSIONAL ENGINEER IS ALTERED, THE ALTERING ENGINEER SHALL AFFIX TO THE ITEM HIS SEAL AND THE NOTATION "ALTERED BY" FOLLOWED BY HIS SIGNATURE, THE DATE, AND A SPECIFIC DESCRIPTION OF THE ALTERATION.

REV	ISSUED FOR	DATE	BY

PROJECT ENGINEER:	R. FROST
DESIGNED BY:	Y. ABDALLA
DRAWN BY:	P. NUGENT
CHECKED BY:	G. MARKOU
IF THIS BAR DOES NOT MEASURE 1" THEN DRAWING IS NOT TO FULL SCALE	0 1/2" 1"

BID SET

STATE OF NEW YORK — GEORGE MARKOU — 022603 — LICENSED PROFESSIONAL ENGINEER

Hazen
HAZEN AND SAWYER
498 SEVENTH AVENUE, 11th FLOOR
NEW YORK, NEW YORK 10018

WESTCHESTER JOINT WATER WORKS
MAMARONECK, NY

RYE LAKE WATER FILTRATION PLANT
HARRISON, NY

ELECTRICAL
MCC-2 SINGLE LINE DIAGRAM
SHEET 1

DATE:	FEB 2025
HAZEN NO.:	90388-000
CONTRACT NO.:	A1364-A
DRAWING NUMBER:	E-005

File: C:\USERS\APENA\DOCACCDOCS\HAZEN AND SAWYER\90388-000_RYE_LAKE_FILTRATION\PROJECT FILES\PROJECTWISE\ELECTRICAL\E-005 Saved by APENA Save date: 4/15/2025 2:36 PM
PLOT DATE: 4/15/2025 3:38 PM BY: APENA

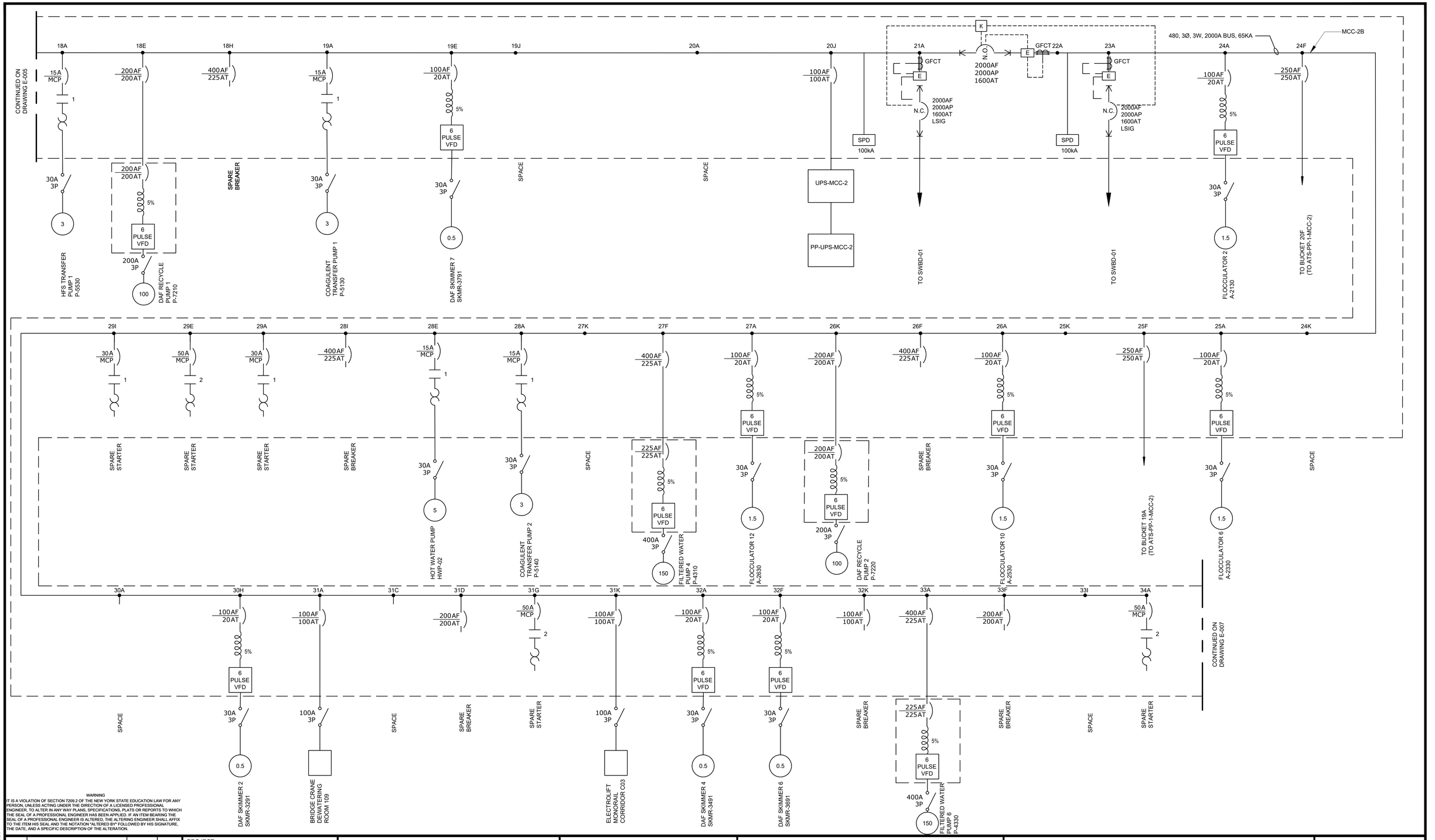

WARNING
IT IS A VIOLATION OF SECTION 7209.2 OF THE NEW YORK STATE EDUCATION LAW FOR ANY PERSON, UNLESS ACTING UNDER THE DIRECTION OF A LICENSED PROFESSIONAL ENGINEER, TO ALTER IN ANY WAY PLANS, SPECIFICATIONS, PLATS OR REPORTS TO WHICH THE SEAL OF A PROFESSIONAL ENGINEER HAS BEEN AFFIXED. IF AN ITEM BEARING THE SEAL OF A PROFESSIONAL ENGINEER IS ALTERED, THE ALTERING ENGINEER SHALL AFFIX TO THE ITEM HIS SEAL AND THE NOTATION "ALTERED BY" FOLLOWED BY HIS SIGNATURE, THE DATE, AND A SPECIFIC DESCRIPTION OF THE ALTERATION.

REV	ISSUED FOR	DATE	BY

PROJECT ENGINEER:	R. FROST
DESIGNED BY:	Y. ABDALLA
DRAWN BY:	P. NUGENT
CHECKED BY:	G. MARKOU
IF THIS BAR DOES NOT MEASURE 1" THEN DRAWING IS NOT TO FULL SCALE	0 1/2" 1"

BID SET

STATE OF NEW YORK GEORGE MARKOU 022603 LICENSED PROFESSIONAL ENGINEER

Hazen
HAZEN AND SAWYER
498 SEVENTH AVENUE, 11th FLOOR
NEW YORK, NEW YORK 10018

WESTCHESTER JOINT WATER WORKS
MAMARONECK, NY

RYE LAKE WATER FILTRATION PLANT
HARRISON, NY

ELECTRICAL
MCC-2 SINGLE LINE DIAGRAM
SHEET 2

DATE:	FEB 2025
HAZEN NO.:	90388-000
CONTRACT NO.:	A1364-A
DRAWING NUMBER:	E-006

File: C:\USERS\APENA\DCACCDOCS\HAZEN AND SAWYER\90388-000_RYE_LAKE_FILTRATION\PROJECT FILES\PROJECTWISE\ELECTRICAL\E-008 Saved by APENA Save date: 4/15/2025 2:24 PM
PLOT DATE: 4/15/2025 3:38 PM BY: APENA

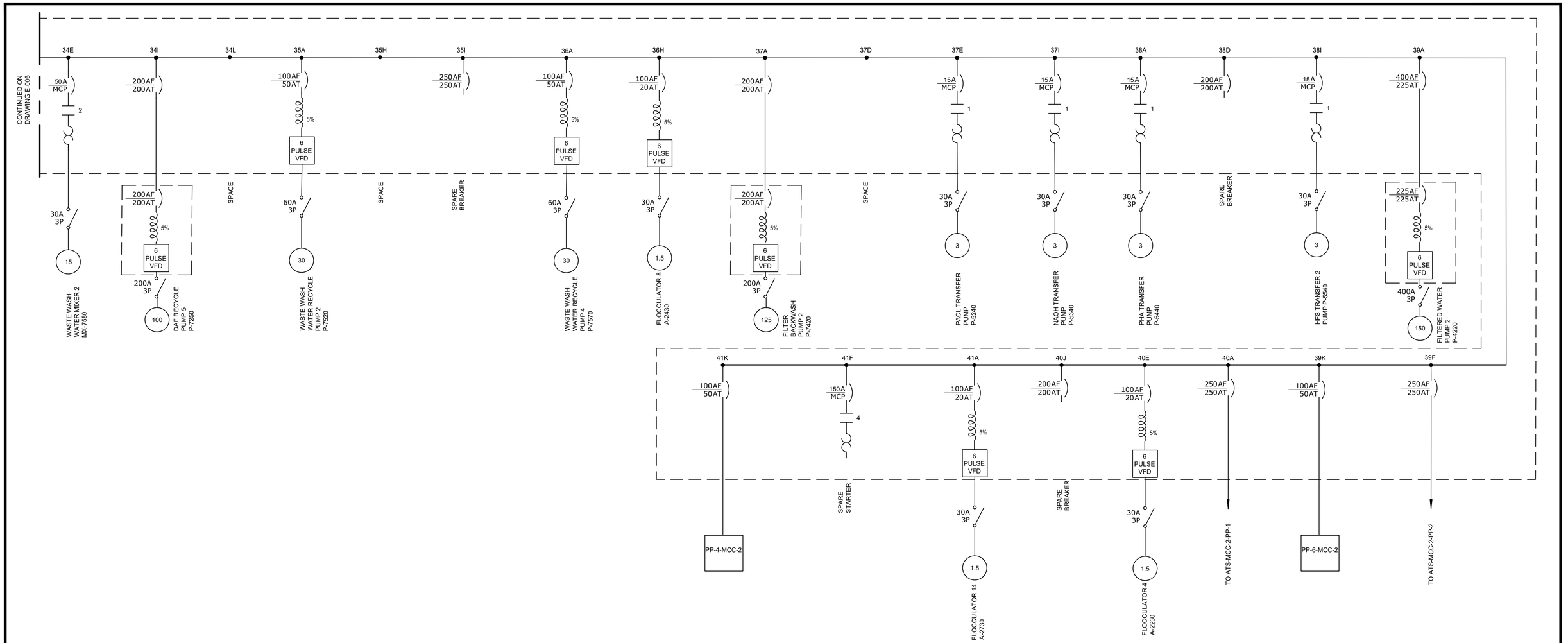

WARNING
IT IS A VIOLATION OF SECTION 7209.2 OF THE NEW YORK STATE EDUCATION LAW FOR ANY PERSON, UNLESS ACTING UNDER THE DIRECTION OF A LICENSED PROFESSIONAL ENGINEER, TO ALTER IN ANY WAY PLANS, SPECIFICATIONS, PLATS OR REPORTS TO WHICH THE SEAL OF A PROFESSIONAL ENGINEER HAS BEEN APPLIED. IF AN ITEM BEARING THE SEAL OF A PROFESSIONAL ENGINEER IS ALTERED, THE ALTERING ENGINEER SHALL AFFIX TO THE ITEM HIS SEAL AND THE NOTATION "ALTERED BY" FOLLOWED BY HIS SIGNATURE, THE DATE, AND A SPECIFIC DESCRIPTION OF THE ALTERATION.

REV	ISSUED FOR	DATE	BY

PROJECT ENGINEER: R. FROST
DESIGNED BY: Y. ABDALLA
DRAWN BY: P. NUGENT
CHECKED BY: G. MARKOU
IF THIS BAR DOES NOT MEASURE 1" THEN DRAWING IS NOT TO FULL SCALE 0 1/2" 1"

BID SET

STATE OF NEW YORK GEORGE MARKOU 072603 LICENSED PROFESSIONAL ENGINEER

Hazen
HAZEN AND SAWYER
498 SEVENTH AVENUE, 11th FLOOR
NEW YORK, NEW YORK 10018

WESTCHESTER JOINT WATER WORKS
MAMARONECK, NY

RYE LAKE WATER FILTRATION PLANT
HARRISON, NY

ELECTRICAL
MCC-2 SINGLE LINE DIAGRAM
SHEET 3

DATE: FEB 2025
HAZEN NO.: 90388-000
CONTRACT NO.: A1364-A
DRAWING NUMBER: E-007

File: C:\USERS\APENA\DCACCDOCS\HAZEN AND SAWYER\90388-000_RYE_LAKE_FILTRATION\PROJECT FILES\PROJECTWISE\ELECTRICAL\E-007 Saved by APENA Save date: 4/15/2025 2:36 PM
PLOT DATE: 4/15/2025 3:38 PM BY: APENA

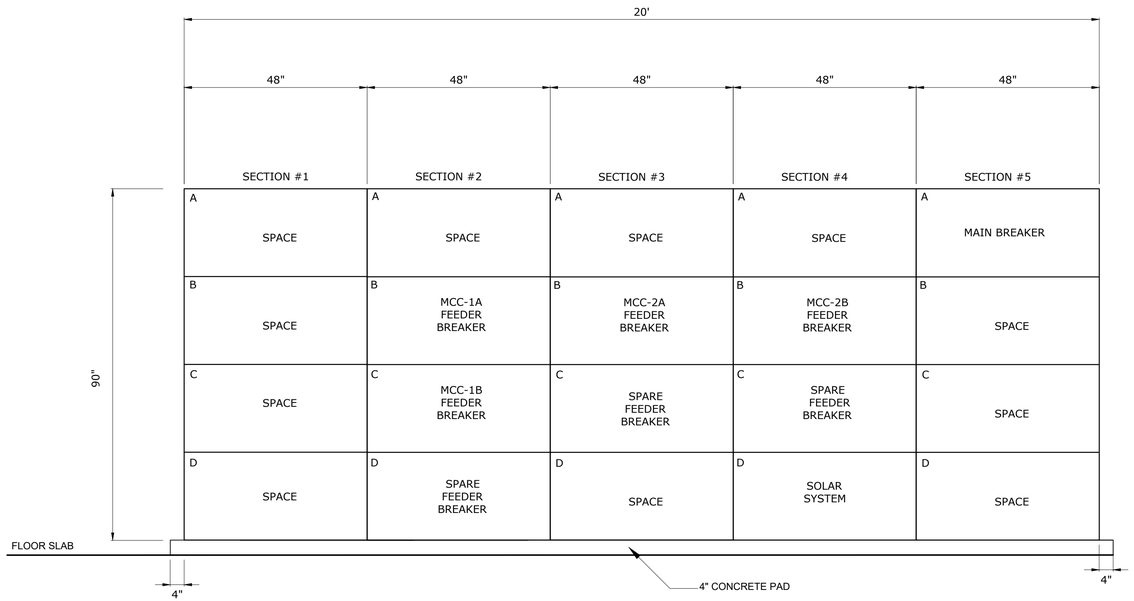

SWBD-1 ELEVATION

(NOT TO SCALE)

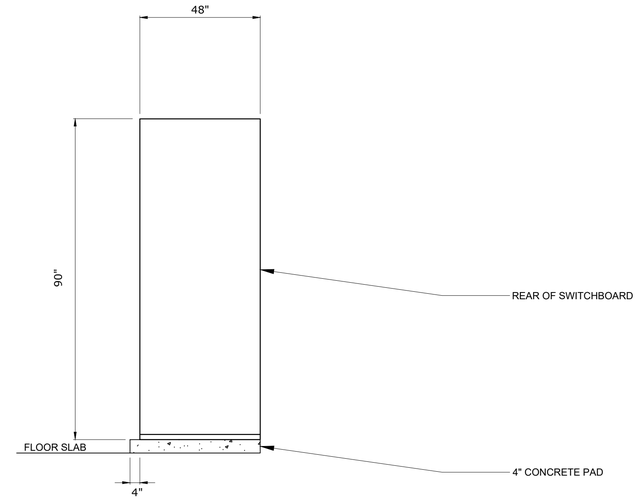

SWBD-1 SIDE VIEW)

(NOT TO SCALE)

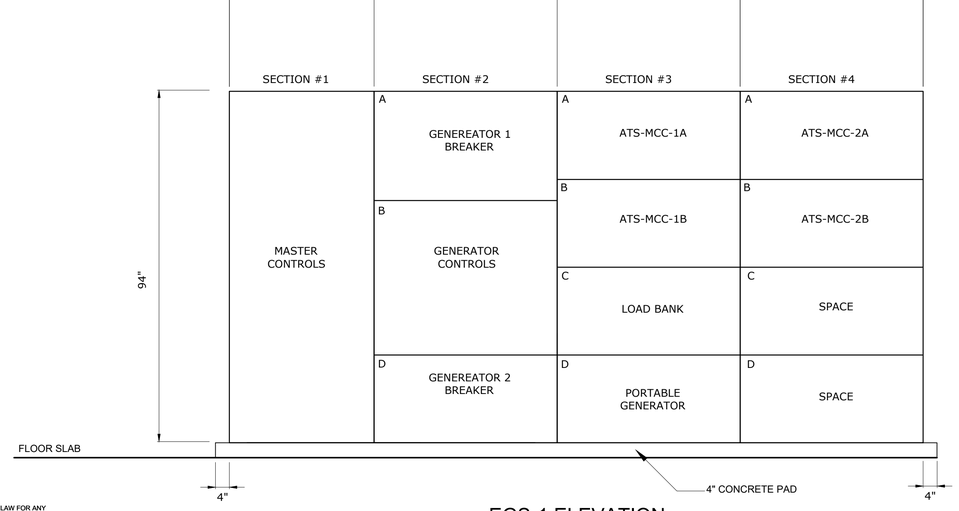

EGS-1 ELEVATION

(NOT TO SCALE)

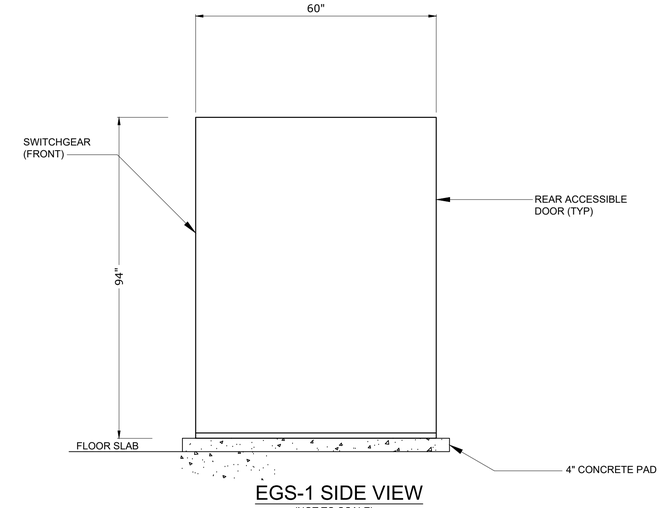

EGS-1 SIDE VIEW

(NOT TO SCALE)

WARNING
IT IS A VIOLATION OF SECTION 7209.2 OF THE NEW YORK STATE EDUCATION LAW FOR ANY PERSON, UNLESS ACTING UNDER THE DIRECTION OF A LICENSED PROFESSIONAL ENGINEER, TO ALTER IN ANY WAY PLANS, SPECIFICATIONS, PLATS OR REPORTS TO WHICH THE SEAL OF A PROFESSIONAL ENGINEER HAS BEEN APPLIED. IF AN ITEM BEARING THE SEAL OF A PROFESSIONAL ENGINEER IS ALTERED, THE ALTERING ENGINEER SHALL AFFIX TO THE ITEM HIS SEAL AND THE NOTATION "ALTERED BY" FOLLOWED BY HIS SIGNATURE, THE DATE, AND A SPECIFIC DESCRIPTION OF THE ALTERATION.

REV	ISSUED FOR	DATE	BY

PROJECT ENGINEER:	R. FROST
DESIGNED BY:	Y. ABDALLA
DRAWN BY:	P. NUGENT
CHECKED BY:	G. MARKOU

IF THIS BAR DOES NOT MEASURE 1" THEN DRAWING IS NOT TO FULL SCALE 0 1/2" 1"

BID SET



Hazen

HAZEN AND SAWYER
498 SEVENTH AVENUE, 11th FLOOR
NEW YORK, NEW YORK 10018

WESTCHESTER JOINT WATER WORKS
MAMARONECK, NY

RYE LAKE WATER FILTRATION PLANT
HARRISON, NY

ELECTRICAL
SWITCHBOARD AND GENERATOR
SWITCHGEAR ELEVATIONS

DATE:	FEB 2025
HAZEN NO.:	90388-000
CONTRACT NO.:	A1364-A
DRAWING NUMBER:	E-008

File: C:\USERS\APENA\DOCACCDOCS\HAZEN AND SAWYER\90388-000_RYE_LAKE_FILTRATION\PROJECT FILES\PROJECTWISE\ELECTRICAL\E-008 Saved by APENA Save date: 4/15/2025 2:36 PM
PLOT DATE: 4/15/2025 3:39 PM BY: APENA

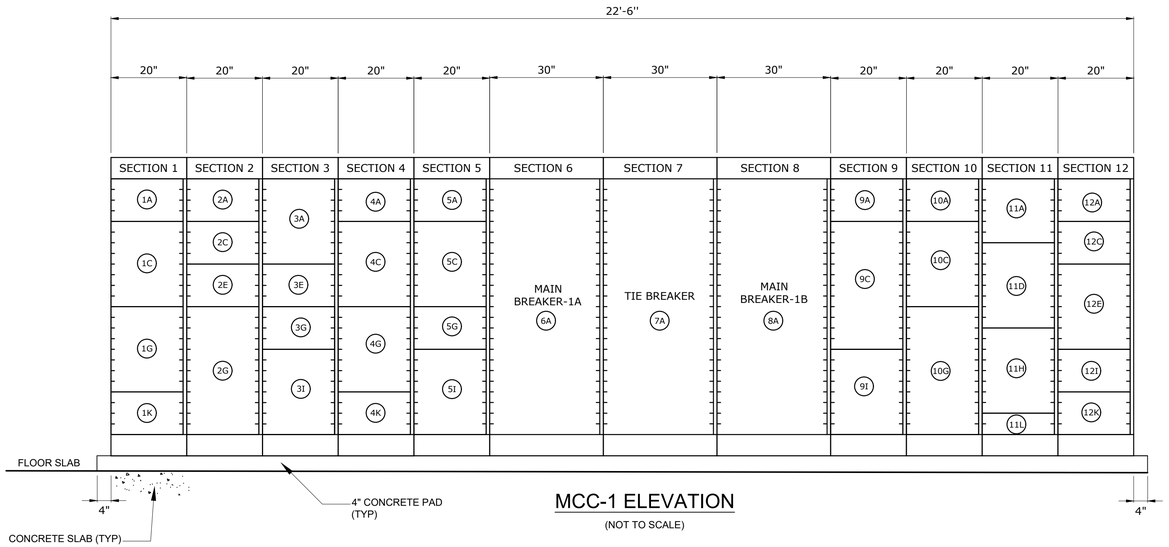

MCC-1 ELEVATION

(NOT TO SCALE)

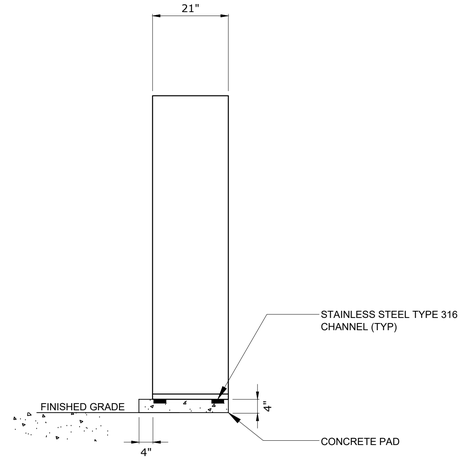

MOTOR CONTROL CENTER DETAIL (SIDE VIEW)

(NOT TO SCALE)

WARNING
IT IS A VIOLATION OF SECTION 7209.2 OF THE NEW YORK STATE EDUCATION LAW FOR ANY PERSON, UNLESS ACTING UNDER THE DIRECTION OF A LICENSED PROFESSIONAL ENGINEER, TO ALTER IN ANY WAY PLANS, SPECIFICATIONS, PLATS OR REPORTS TO WHICH THE SEAL OF A PROFESSIONAL ENGINEER HAS BEEN APPLIED. IF AN ITEM BEARING THE SEAL OF A PROFESSIONAL ENGINEER IS ALTERED, THE ALTERING ENGINEER SHALL AFFIX TO THE ITEM HIS SEAL AND THE NOTATION "ALTERED BY" FOLLOWED BY HIS SIGNATURE, THE DATE, AND A SPECIFIC DESCRIPTION OF THE ALTERATION.

REV	ISSUED FOR	DATE	BY

PROJECT ENGINEER:	R. FROST
DESIGNED BY:	Y. ABDALLA
DRAWN BY:	P. NUGENT
CHECKED BY:	G. MARKOU
IF THIS BAR DOES NOT MEASURE 1" THEN DRAWING IS NOT TO FULL SCALE	0 1/2" 1"

BID SET

STATE OF NEW YORK GEORGE MARKOU 072603 LICENSED PROFESSIONAL ENGINEER

Hazen

HAZEN AND SAWYER
498 SEVENTH AVENUE, 11th FLOOR
NEW YORK, NEW YORK 10018

WESTCHESTER JOINT WATER WORKS
MAMARONECK, NY

RYE LAKE WATER FILTRATION PLANT
HARRISON, NY

ELECTRICAL
MCC-1 ELEVATION

DATE:	FEB 2025
HAZEN NO.:	90388-000
CONTRACT NO.:	A1364-A
DRAWING NUMBER:	E-009

File: C:\USERS\APENA\DC\ACCDOCS\HAZEN AND SAWYER\90388-000_RYE_LAKE_FILTRATION\PROJECT FILES\PROJECTWISE\ELECTRICAL\E-009 Saved by OKREMEN Save date: 2/7/2025 4:05 PM
PLOT DATE: 4/15/2025 3:39 PM BY: APENA

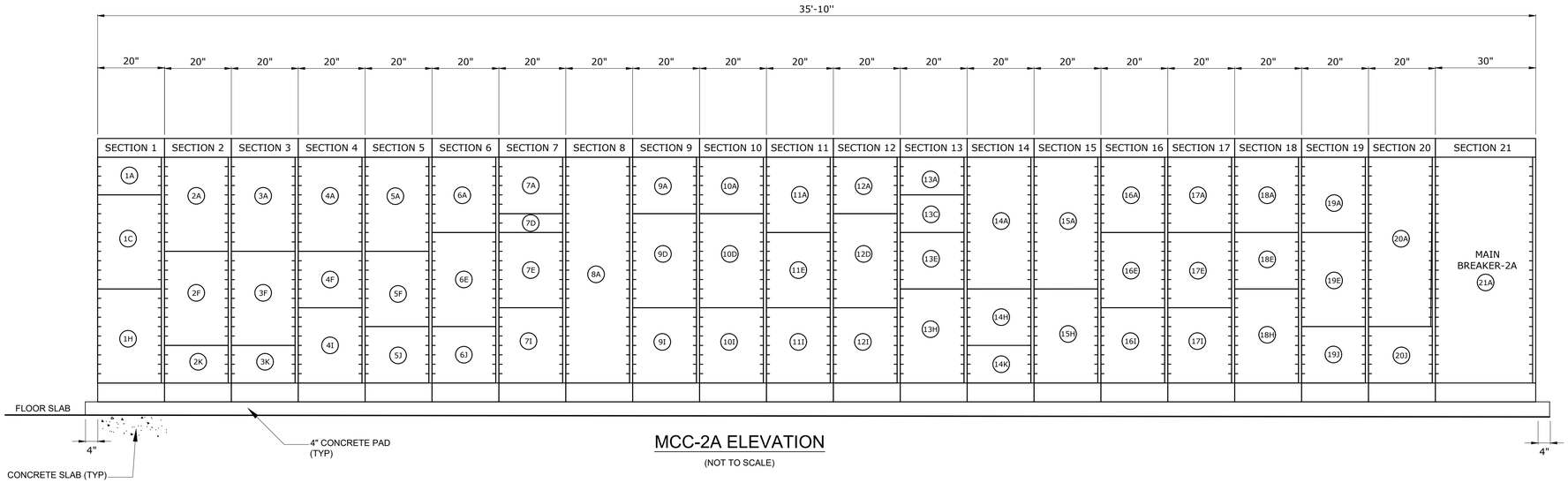

MCC-2A ELEVATION

(NOT TO SCALE)

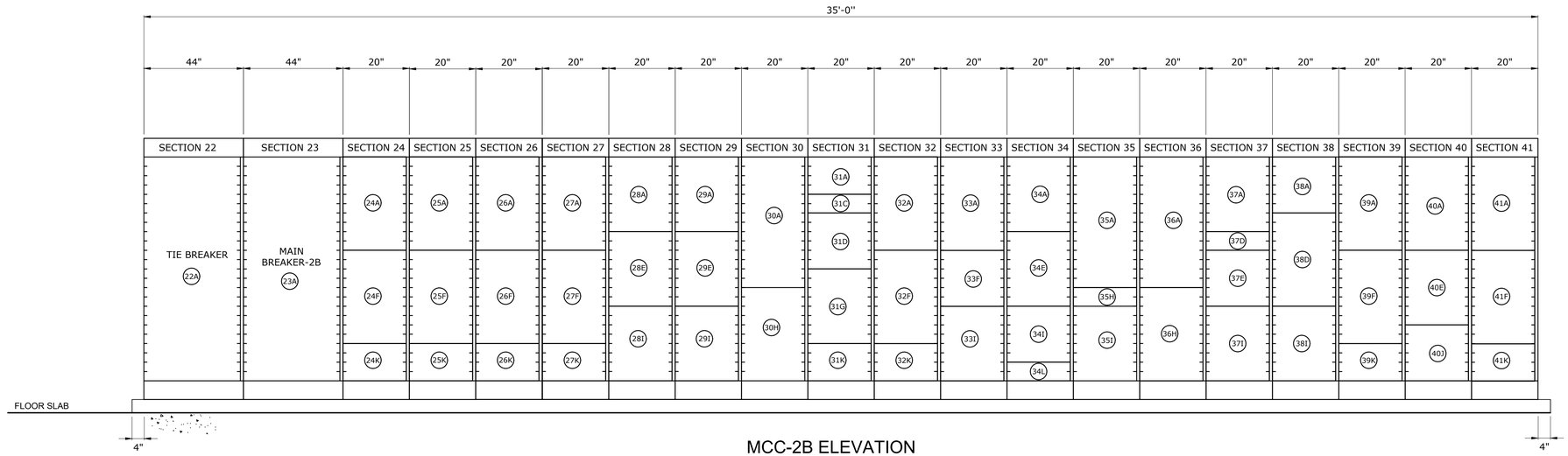

MCC-2B ELEVATION

(NOT TO SCALE)

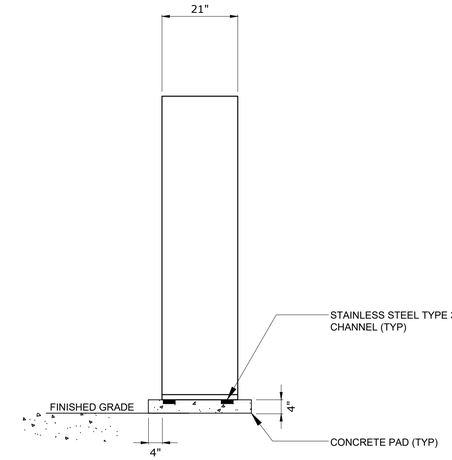

MOTOR CONTROL CENTER DETAIL (SIDE VIEW)

(NOT TO SCALE)

WARNING
IT IS A VIOLATION OF SECTION 7209.2 OF THE NEW YORK STATE EDUCATION LAW FOR ANY PERSON, UNLESS ACTING UNDER THE DIRECTION OF A LICENSED PROFESSIONAL ENGINEER, TO ALTER IN ANY WAY PLANS, SPECIFICATIONS, PLATS OR REPORTS TO WHICH THE SEAL OF A PROFESSIONAL ENGINEER HAS BEEN APPLIED. IF AN ITEM BEARING THE SEAL OF A PROFESSIONAL ENGINEER IS ALTERED, THE ALTERING ENGINEER SHALL AFFIX TO THE ITEM HIS SEAL AND THE NOTATION "ALTERED BY" FOLLOWED BY HIS SIGNATURE, THE DATE, AND A SPECIFIC DESCRIPTION OF THE ALTERATION.

REV	ISSUED FOR	DATE	BY

PROJECT ENGINEER:	R. FROST
DESIGNED BY:	Y. ABDALLA
DRAWN BY:	P. NUGENT
CHECKED BY:	G. MARKOU
IF THIS BAR DOES NOT MEASURE 1" THEN DRAWING IS NOT TO FULL SCALE	0 1/2" 1"

BID SET

STATE OF NEW YORK · GEORGE MARKOU · 022603 · LICENSED PROFESSIONAL ENGINEER

Hazen

HAZEN AND SAWYER
498 SEVENTH AVENUE, 11th FLOOR
NEW YORK, NEW YORK 10018

WESTCHESTER JOINT WATER WORKS
MAMARONECK, NY

RYE LAKE WATER FILTRATION PLANT
HARRISON, NY

ELECTRICAL
MCC-2 ELEVATION

DATE:	FEB 2025
HAZEN NO.:	90388-000
CONTRACT NO.:	A1364-A
DRAWING NUMBER:	E-010

File: C:\USERS\APENA\DOCACCDOCS\HAZEN AND SAWYER\90388-000_RYE_LAKE_FILTRATION\PROJECT FILES\PROJECTWISE\ELECTRICAL\E-010 Saved by APENA Save date: 4/15/2025 9:21 AM
PLOT DATE: 4/15/2025 3:39 PM BY: APENA

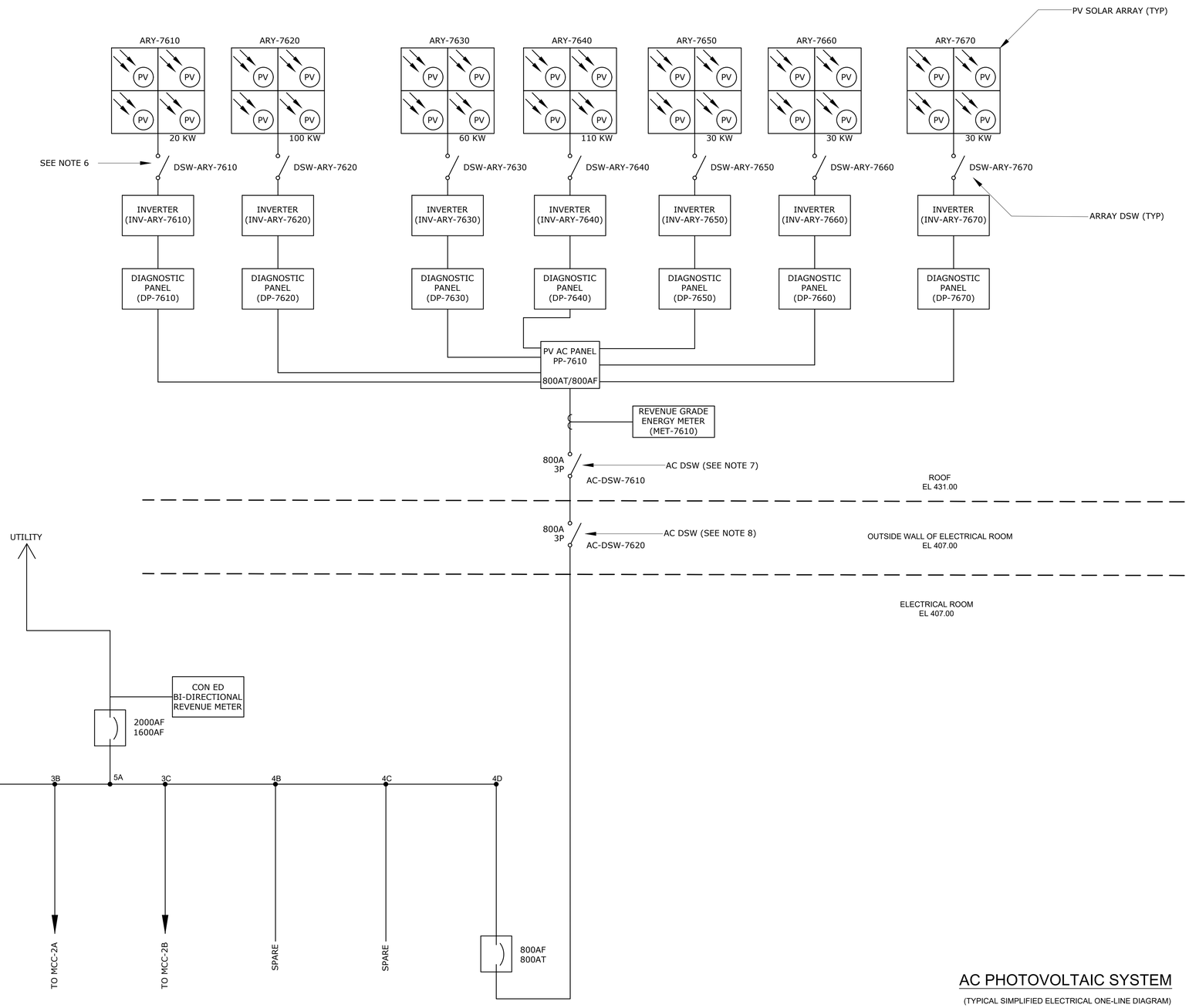

NOTES:

1. PV ELECTRICAL DESIGN SHOWN IS CONCEPTUAL AND REPRESENTS THE MINIMUM EQUIPMENT NECESSARY TO MEET THE PV PERFORMANCE REQUIREMENT.
2. PV EQUIPMENT LOCATED ON THE ROOF WILL PENETRATE THE ROOF INTO THE ELECTRICAL ROOM BEFORE FEEDING THE SWITCHGEAR.
3. REFER TO SECTION 48 14 14 FOR THE PERFORMANCE SPECIFICATION FOR THE PV SYSTEM.
4. PV SYSTEM CONNECTION TO BI-DIRECTIONAL METER BASED ON CON-ED APPROVAL.
5. AC CIRCUIT BREAKERS SHALL BE RATED FOR BI-DIRECTIONAL OPERATION.
6. ALL EQUIPMENT FROM PV PANELS TO REVENUE GRADE ENERGY METER SHALL BE FURNISHED AND INSTALLED BY PV VENDOR.
7. AC-DSW-7610 SHALL BE INSTALLED ON THE ROOF.
8. AC-DSW-7620 SHALL BE INSTALLED ON THE OUTSIDE WALL OF ELECTRICAL ROOM.

AC PHOTOVOLTAIC SYSTEM

(TYPICAL SIMPLIFIED ELECTRICAL ONE-LINE DIAGRAM)

WARNING
IT IS A VIOLATION OF SECTION 7209.2 OF THE NEW YORK STATE EDUCATION LAW FOR ANY PERSON, UNLESS ACTING UNDER THE DIRECTION OF A LICENSED PROFESSIONAL ENGINEER, TO ALTER IN ANY WAY PLANS, SPECIFICATIONS, PLATS OR REPORTS TO WHICH THE SEAL OF A PROFESSIONAL ENGINEER HAS BEEN APPLIED. IF AN ITEM BEARING THE SEAL OF A PROFESSIONAL ENGINEER IS ALTERED, THE ALTERING ENGINEER SHALL AFFIX TO THE ITEM HIS SEAL AND THE NOTATION "ALTERED BY" FOLLOWED BY HIS SIGNATURE, THE DATE, AND A SPECIFIC DESCRIPTION OF THE ALTERATION.

REV	ISSUED FOR	DATE	BY

PROJECT ENGINEER:	R. FROST
DESIGNED BY:	Y. ABDALLA
DRAWN BY:	P. NUGENT
CHECKED BY:	G. MARKOU

IF THIS BAR DOES NOT MEASURE 1" THEN DRAWING IS NOT TO FULL SCALE (0, 1/2", 1")

BID SET

STATE OF NEW YORK — GEORGE MARKOU — 072603 — LICENSED PROFESSIONAL ENGINEER

Hazen
HAZEN AND SAWYER
498 SEVENTH AVENUE, 11th FLOOR
NEW YORK, NEW YORK 10018

WESTCHESTER JOINT WATER WORKS
MAMARONECK, NY

RYE LAKE WATER FILTRATION PLANT
HARRISON, NY

ELECTRICAL
SOLAR SYSTEM RISER DIAGRAM

DATE:	FEB 2025
HAZEN NO.:	90388-000
CONTRACT NO.:	A1364-A
DRAWING NUMBER:	E-011

File: C:\USERS\APENA\DOCACCDOCS\HAZEN AND SAWYER\90388-000_RYE_LAKE_FILTRATION\PROJECT FILES\PROJECTWISE\ELECTRICAL\E-011 Saved by OKREMEN Save date: 2/7/2025 4:05 PM
PLOT DATE: 4/15/2025 3:40 PM BY: APENA

480 VOLTS
3 PHASE, 3 WIRE

POWER PANEL PP-1-MCC-1
MAIN BREAKER
250A 3P

TYPE: NEMA 1
MOUNT: SURFACE
LOCATION: ELECTRICAL ROOM 119

DESCRIPTION	TRIP	POLE	CKT No.	KILO-VOLT-AMPERES A	B	C	KILO-VOLT-AMPERES A	B	C	CKT No.	POLE	TRIP	DESCRIPTION
			1	1.00			0.20			2			
AHU-01	20	3	3		1.00			0.20		4	3	20	FOP-1
			5			1.00			0.20	6			
			7	0.15			0.20			8			
MOV-7590	20	3	9		0.15			0.20		10	3	20	FOP-2
			11			0.15			0.20	12			
			13	15.00			5.00			14			
XFRM-LP-1-MCC-1	20	3	15		15.00			5.00		16	3	25	XFMR-UPS-IP-1-MCC-1
			17			15.00			5.00	18			
			19	1.20			15.00			20			
GATE POWER	20	3	21		1.20			15.00		22	3	70	XFRM-LP-3-MCC-1
			23			1.20			15.00	24			
			25	-			0.70			26			
SPARE	20	3	27		-			0.70		28	3	20	AHU-07
			29			-			0.70	30			
			31	-			-			32			
SPARE	70	3	33		-			-		34	3	20	SPARE
			35			-			-	36			
			37	-			-			38			
SPARE	20	3	39		-			-		40	3	20	SPARE
			41			-			-	42			
			TOTAL	17	17	17	21	21	21	TOTAL			
				PHASE TOTAL			TOTAL LOAD (KVA)						
				38	38	38	115						
							TOTAL LOAD (A)						
							139						

NOTES:
65kAIC
100kA SPD

480 VOLTS
3 PHASE, 3 WIRE

POWER PANEL PP-3-MCC-1
MAIN BREAKER
100A 3P

TYPE: NEMA 4X
MOUNT: SURFACE
LOCATION: PIPE GALLERY (PLATFORM)

DESCRIPTION	TRIP	POLE	CKT No.	KILO-VOLT-AMPERES A	B	C	KILO-VOLT-AMPERES A	B	C	CKT No.	POLE	TRIP	DESCRIPTION
			1	0.20			0.20			2			
MOV-3160	20	3	3		0.20			0.20		4	3	20	MOV-3180
			5			0.20			0.20	6			
			7	0.20			0.30			8			
MOV-3260	20	3	9		0.20			0.30		10	3	20	MOV-3280
			11			0.20			0.30	12			
			13	0.20			0.30			14			
MOV-3360	20	3	15		0.20			0.30		16	3	20	MOV-3380
			17			0.20			0.30	18			
			19	0.20			0.20			20			
MOV-3150	20	3	21		0.20			0.20		22	3	20	MOV-3170
			23			0.20			0.20	24			
			25	0.20			0.20			26			
MOV-3250	20	3	27		0.20			0.20		28	3	20	MOV-3270
			29			0.20			0.20	30			
			31	0.20			-			32			
MOV-3350	20	3	33		0.20			-		34	3	20	SPARE
			35			0.20			-	36			
			37	-			-			38			
SPARE	20	3	39		-			-		40	3	20	SPARE
			41			-			-	42			
			TOTAL	1	1	1	1	1	1	TOTAL			
				PHASE TOTAL			TOTAL LOAD (KVA)						
				2	2	2	7						
							TOTAL LOAD (A)						
							9						

NOTES:
65kAIC
100kA SPD

480 VOLTS
3 PHASE, 3 WIRE

POWER PANEL PP-2-MCC-1
MAIN BREAKER
150A 3P

TYPE: NEMA 4X
MOUNT: SURFACE
LOCATION: DEWATERING ROOM

DESCRIPTION	TRIP	POLE	CKT No.	KILO-VOLT-AMPERES A	B	C	KILO-VOLT-AMPERES A	B	C	CKT No.	POLE	TRIP	DESCRIPTION
			1	7.00			10.00			2			
LCP-6010	40	3	3		7.00			10.00		4	3	50	XFMR-LP2-MCC1
			5			7.00			10.00	6			
			7	0.33			0.33			8			
SLG-6450	20	3	9		0.33			0.33		10	3	20	ROLL-UP DOOR (109-2)
			11			0.33			0.33	12			
			13	0.33			0.33			14			
SLG-6460	20	3	15		0.33			0.33		16	3	20	SLG-4250
			17			0.33			0.33	18			
			19	0.33			5.00			20			
SLG-6470	20	3	21		0.33			5.00		22	3	25	LCP-7700
			23			0.33			5.00	24			
			25	-			0.33			26			
SPARE	20	3	27		-			0.33		28	3	20	ROLL-UP DOOR (109-1)
			29			-			0.33	30			
			31	-			-			32			
SPARE	20	3	33		-			-		34	3	20	SPARE
			35			-			-	36			
			37	-			-			38			
SPARE	20	3	39		-			-		40	3	20	SPARE
			41			-			-	42			
			TOTAL	8	8	8	16	16	16	TOTAL			
				PHASE TOTAL			TOTAL LOAD (KVA)						
				24	24	24	72						
							TOTAL LOAD (A)						
							87						

NOTES:
65kAIC
100kA SPD

480 VOLTS
3 PHASE, 3 WIRE

POWER PANEL PP-4-MCC-1
MAIN BREAKER
50A 3P

TYPE: NEMA 1
MOUNT: SURFACE
LOCATION: ELECTRICAL ROOM 119

DESCRIPTION	TRIP	POLE	CKT No.	KILO-VOLT-AMPERES A	B	C	KILO-VOLT-AMPERES A	B	C	CKT No.	POLE	TRIP	DESCRIPTION
			1	1.00			1.00			2			
MOV-1901	20	3	3		1.00			1.00		4	3	20	MOV-1902
			5			1.00			1.00	6			
			7	-			-			8			
SPARE	20	3	9		-			-		10	3	20	SPARE
			11			-			-	12			
			13	-			-			14			
SPARE	20	3	15		-			-		16	3	20	SPARE
			17			-			-	18			
			TOTAL	1	1	1	1	1	1	TOTAL			
				PHASE TOTAL			TOTAL LOAD (KVA)						
				2	2	2	6						
							TOTAL LOAD (A)						
							7						

NOTES:
65kAIC
100kA SPD

480 VOLTS
3 PHASE, 3 WIRE

POWER PANEL PP-1-MCC-2
MAIN BREAKER
250A 3P

TYPE: NEMA 1
MOUNT: SURFACE
LOCATION: ELECTRICAL ROOM 203

DESCRIPTION	TRIP	POLE	CKT No.	KILO-VOLT-AMPERES A	B	C	KILO-VOLT-AMPERES A	B	C	CKT No.	POLE	TRIP	DESCRIPTION
			1	2.00			10.00			2			
AHU-02	20	3	3		2.00			10.00		4	3	50	XFMR-LP5-MCC-2
			5			2.00			10.00	6			
			7	6.00			3.00			8			
AHU-03	30	3	9		6.00			3.00		10	3	60	AHU-08
			11			6.00			3.00	12			
			13	8.00			0.80			14			
AHU-04	40	3	15		8.00			0.80		16	3	20	AHU-09
			17			8.00			0.80	18			
			19	2.00			10.00			20			
AHU-05	20	3	21		2.00			10.00		22	3	50	XFMR-LP1-MCC-2
			23			2.00			10.00	24			
			25	1.00			10.00			26			
MOV-3770	20	3	27		1.00			10.00		28	3	50	XFMR-LP3-MCC-2
			29			1.00			10.00	30			
			31	2.10			-			32			
EF-07	20	3	33		2.10			-		34	3	20	SPARE
			35			2.10			-	36			
			37	-			-			38			
SPARE	20	3	39		-			-		40	3	20	SPARE
			41			-			-	42			
			TOTAL	21	21	21	34	34	34	TOTAL			
				PHASE TOTAL			TOTAL LOAD (KVA)						
				55	55	55	165						
							TOTAL LOAD (A)						
							198						

NOTES:
65kAIC
100kA SPD

WARNING
IT IS A VIOLATION OF SECTION 7209.2 OF THE NEW YORK STATE EDUCATION LAW FOR ANY PERSON, UNLESS ACTING UNDER THE DIRECTION OF A LICENSED PROFESSIONAL ENGINEER, TO ALTER IN ANY WAY PLANS, SPECIFICATIONS, PLATS OR REPORTS TO WHICH THE SEAL OF A PROFESSIONAL ENGINEER HAS BEEN AFFIXED. IF AN ITEM BEARING THE SEAL OF A PROFESSIONAL ENGINEER IS ALTERED, THE ALTERING ENGINEER SHALL AFFIX TO THE ITEM HIS SEAL AND THE NOTATION "ALTERED BY" FOLLOWED BY HIS SIGNATURE, THE DATE, AND A SPECIFIC DESCRIPTION OF THE ALTERATION.

REV	ISSUED FOR	DATE	BY

PROJECT ENGINEER: R. FROST
DESIGNED BY: Y. ABDALLA
DRAWN BY: P. NUGENT
CHECKED BY: G. MARKOU
IF THIS BAR DOES NOT MEASURE 1" THEN DRAWING IS NOT TO FULL SCALE 0 1/2" 1"

BID SET

STATE OF NEW YORK · GEORGE MARKOU · 022603 · LICENSED PROFESSIONAL ENGINEER

Hazen

HAZEN AND SAWYER
498 SEVENTH AVENUE, 11th FLOOR
NEW YORK, NEW YORK 10018

WESTCHESTER JOINT WATER WORKS
MAMARONECK, NY

RYE LAKE WATER FILTRATION PLANT
HARRISON, NY

ELECTRICAL
PANEL BOARD SCHEDULES - SHEET 1

DATE: FEB 2025
HAZEN NO.: 90388-000
CONTRACT NO.: A1364-A
DRAWING NUMBER: E-012

File: C:\USERS\APENA\DOCACCDOCS\HAZEN AND SAWYER\90388-000_RYE_LAKE_FILTRATION\PROJECT FILES\PROJECTWISE\ELECTRICAL\E-012-BID Saved by APENA Save date: 4/15/2025 2:43 PM
PLOT DATE: 4/15/2025 3:41 PM BY: APENA

480 VOLTS
3 PHASE, 3 WIRE

POWER PANEL PP-2-MCC-2
MAIN BREAKER
250A 3P

TYPE: NEMA 1
MOUNT: SURFACE
LOCATION: ELECTRICAL ROOM 203

DESCRIPTION	TRIP	POLE	CKT No.	KILO-VOLT-AMPERES A	B	C	KILO-VOLT-AMPERES A	B	C	CKT No.	POLE	TRIP	DESCRIPTION
			1	0.70			1.00			2			
AHU-06	20	3	3		0.70			1.00		4	3	15	MOV-3370
			5			0.70			1.00	6			
			7	6.00			1.00			8			
ACCU-07	25	3	9		6.00			1.00		10	3	20	MOV-3470
			11			6.00			1.00	12			
			13	-			1.00			14			
SPARE	50	3	15		-			1.00		16	3	20	MOV-3570
			17			-			1.00	18			
			19	4.50			1.00			20			
ACCU-05	25	3	21		4.50			1.00		22	3	20	MOV-3670
			23			4.50			1.00	24			
			25	1.00			-			26			
MOV-3680	20	3	27		1.00			-		28	3	30	SPARE
			29			1.00			-	30			
			31	0.70			10.00			32			
MOV-3780	15	3	33		0.70			10.00		34	3	50	XFMR-LP-2-MCC-2
			35			0.70			10.00	36			
			37	-			-			38			
SPARE	20	3	39		-			-		40	3	20	SPARE
			41			-			-	42			

TOTAL	13	13	13	14	14	14	TOTAL
	PHASE TOTAL			TOTAL LOAD (KVA)			
	27	27	27	81			
				TOTAL LOAD (A)			
				97			

NOTES:
65kAIC
100kA SPD

480 VOLTS
3 PHASE, 3 WIRE

POWER PANEL PP-4-MCC-2
MAIN BREAKER
50A 3P

TYPE: NEMA 4X
MOUNT: SURFACE
LOCATION: PIPE GALLERY PLATFORM

DESCRIPTION	TRIP	POLE	CKT No.	KILO-VOLT-AMPERES A	B	C	KILO-VOLT-AMPERES A	B	C	CKT No.	POLE	TRIP	DESCRIPTION
			1	0.20			0.20			2			
MOV-3460	20	3	3		0.20			0.20		4	3	20	MOV-3450
			5			0.20			0.20	6			
			7	0.20			0.20			8			
MOV-3560	20	3	9		0.20			0.20		10	3	20	MOV-3550
			11			0.20			0.20	12			
			13	0.20			0.20			14			
MOV-3760	20	3	15		0.20			0.20		16	3	20	MOV-3650
			17			0.20			0.20	18			
			19	0.20			0.20			20			
MOV-3860	20	3	21		0.20			0.20		22	3	20	MOV-3750
			23			0.20			0.20	24			
			25	0.20			0.20			26			
MOV-3480	20	3	27		0.20			0.20		28	3	20	MOV-7450
			29			0.20			0.20	30			
			31	0.20			-			32			
MOV-3580	20	3	33		0.20			-		34	3	20	SPARE
			35			0.20			-	36			
			37	-			-			38			
SPARE	20	3	39		-			-		40	3	20	SPARE
			41			-			-	42			

TOTAL	1	1	1	1	1	1	TOTAL
	PHASE TOTAL			TOTAL LOAD (KVA)			
	2	2	2	7			
				TOTAL LOAD (A)			
				8			

NOTES:
65kAIC
100kA SPD

480 VOLTS
3 PHASE, 3 WIRE

POWER PANEL PP-6-MCC-2
MAIN BREAKER
50A 3P

TYPE: NEMA 4X
MOUNT: SURFACE
LOCATION: PIPE GALLERY PLATFORM

DESCRIPTION	TRIP	POLE	CKT No.	KILO-VOLT-AMPERES A	B	C	KILO-VOLT-AMPERES A	B	C	CKT No.	POLE	TRIP	DESCRIPTION
			1	0.20			0.20			2			
MOV-4240	20	3	3		0.20			0.20		4	3	20	MOV-7440
			5			0.20			0.20	6			
			7	0.20			0.30			8			
MOV-4340	20	3	9		0.20			0.30		10	3	20	ROLL-UP DOOR (129-2)
			11			0.20			0.30	12			
			13	-			-			14			
SPARE	20	3	15		-			-		16	3	20	SPARE
			17			-			-	18			
			19	-			-			20			
SPARE	20	3	21		-			-		22	3	20	SPARE
			23			-			-	24			
			25	-			-			26			
SPARE	20	3	27		-			-		28	3	20	SPARE
			29			-			-	30			
			31	-			-			32			
SPARE	20	3	33		-			-		34	3	20	SPARE
			35			-			-	36			
			37	-			-			38			
SPARE	20	3	39		-			-		40	3	20	SPARE
			41			-			-	42			

TOTAL	0	0	0	1	1	1	TOTAL
	PHASE TOTAL			TOTAL LOAD (KVA)			
	1	1	1	3			
				TOTAL LOAD (A)			
				3			

NOTES:
65kAIC
100kA SPD

480 VOLTS
3 PHASE, 3 WIRE

POWER PANEL PP-3-MCC-2
MAIN BREAKER
150A 3P

TYPE: NEMA 4X
MOUNT: SURFACE
LOCATION: FILTERED WATER PUMP ROOM

DESCRIPTION	TRIP	POLE	CKT No.	KILO-VOLT-AMPERES A	B	C	KILO-VOLT-AMPERES A	B	C	CKT No.	POLE	TRIP	DESCRIPTION
			1	13.00			3.70			2			
COMP-7310	60	3	3		13.00			3.70		4	3	20	LCP-7610
			5			13.00			3.70	6			
			7	-			2.00			8			
COMP-7320	60	3	9		-			2.00		10	3	20	TWH-01
			11			-			2.00	12			
			13	10.00			0.30			14			
XFMR-LP4-MCC-2	50	3	15		10.00			0.30		16	3	20	ROLL-UP DOOR (106-2)
			17			10.00			0.30	18			
			19	-			-			20			
SPARE	20	3	21		-			-		22	3	20	SPARE
			23			-			-	24			
			25	-			-			26			
SPARE	20	3	27		-			-		28	3	20	SPARE
			29			-			-	30			
			31	-			-			32			
SPARE	20	3	33		-			-		34	3	20	SPARE
			35			-			-	36			
			37	-			-			38			
SPARE	50	3	39		-			-		40	3	20	SPARE
			41			-			-	42			

TOTAL	23	23	23	6	6	6	TOTAL
	PHASE TOTAL			TOTAL LOAD (KVA)			
	29	29	29	87			
				TOTAL LOAD (A)			
				105			

NOTES:
65kAIC
100 kA SPD

480 VOLTS
3 PHASE, 3 WIRE

POWER PANEL PP-5-MCC-2
MAIN BREAKER
100A 3P

TYPE: NEMA 4X
MOUNT: SURFACE
LOCATION: PIPE GALLERY PLATFORM

DESCRIPTION	TRIP	POLE	CKT No.	KILO-VOLT-AMPERES A	B	C	KILO-VOLT-AMPERES A	B	C	CKT No.	POLE	TRIP	DESCRIPTION
			1	0.20			0.20			2			
MOV-2110	20	3	3		0.20			0.20		4	3	20	MOV-2510
			5			0.20			0.20	6			
			7	0.20			0.20			8			
MOV-2210	20	3	9		0.20			0.20		10	3	20	MOV-2610
			11			0.20			0.20	12			
			13	0.20			0.20			14			
MOV-2310	20	3	15		0.20			0.20		16	3	20	MOV-2710
			17			0.20			0.20	18			
			19	0.20			-			20			
MOV-2410	20	3	21		0.20			-		22	3	20	SPARE
			23			0.20			-	24			
			25	-			-			26			
SPARE	20	3	27		-			-		28	3	20	SPARE
			29			-			-	30			
			31	-			-			32			
SPARE	20	3	33		-			-		34	3	20	SPARE
			35			-			-	36			
			37	-			-			38			
SPARE	20	3	39		-			-		40	3	20	SPARE
			41			-			-	42			

TOTAL	1	1	1	1	1	1	TOTAL
	PHASE TOTAL			TOTAL LOAD (KVA)			
	1	1	1	4			
				TOTAL LOAD (A)			
				5			

NOTES:
65kAIC
100kA SPD

480 VOLTS
3 PHASE, 3 WIRE

POWER PANEL PP-UPS-MCC-2
MAIN BREAKER
100A 3P

TYPE: NEMA 1
MOUNT: SURFACE
LOCATION: ELECTRICAL ROOM 203

DESCRIPTION	TRIP	POLE	CKT No.	KILO-VOLT-AMPERES A	B	C	KILO-VOLT-AMPERES A	B	C	CKT No.	POLE	TRIP	DESCRIPTION
			1	0.20			0.20			2			
MOV-7352	20	3	3		0.20			0.20		4	3	20	MOV-7362
			5			0.20			0.20	6			
			7	5.00			5.00			8			
XFMR-IP-1-MCC-2	40	3	9		5.00			5.00		10	3	40	XFMR-IP-2-MCC-2
			11			5.00			5.00	12			
			13	-			-			14			
SPARE	20	3	15		-			-		16	3	20	SPARE
			17			-			-	18			
			19	-			-			20			
SPARE	20	3	21		-			-		22	3	20	SPARE
			23			-			-	24			
			25	-			-			26			
SPARE	20	3	27		-			-		28	3	20	SPARE
			29			-			-	30			

TOTAL	5	5	5	5	5	5	TOTAL
	PHASE TOTAL			TOTAL LOAD (KVA)			
	10	10	10	31			
				TOTAL LOAD (A)			
				38			

NOTES:
65kAIC
100kA SPD

WARNING
IT IS A VIOLATION OF SECTION 7209.2 OF THE NEW YORK STATE EDUCATION LAW FOR ANY PERSON, UNLESS ACTING UNDER THE DIRECTION OF A LICENSED PROFESSIONAL ENGINEER, TO ALTER IN ANY WAY PLANS, SPECIFICATIONS, PLATS OR REPORTS TO WHICH THE SEAL OF A PROFESSIONAL ENGINEER HAS BEEN AFFIXED. IF AN ITEM BEARING THE SEAL OF A PROFESSIONAL ENGINEER IS ALTERED, THE ALTERING ENGINEER SHALL AFFIX TO THE ITEM HIS SEAL AND THE NOTATION "ALTERED BY" FOLLOWED BY HIS SIGNATURE, THE DATE, AND A SPECIFIC DESCRIPTION OF THE ALTERATION.

REV	ISSUED FOR	DATE	BY

PROJECT ENGINEER: R. FROST
DESIGNED BY: Y. ABDALLA
DRAWN BY: P. NUGENT
CHECKED BY: G. MARKOU

IF THIS BAR DOES NOT MEASURE 1" THEN DRAWING IS NOT TO FULL SCALE 0 1/2" 1"

BID SET

STATE OF NEW YORK · GEORGE MARKOU · 072603 · LICENSED PROFESSIONAL ENGINEER

Hazen

HAZEN AND SAWYER
498 SEVENTH AVENUE, 11th FLOOR
NEW YORK, NEW YORK 10018

WESTCHESTER JOINT WATER WORKS
MAMARONECK, NY

RYE LAKE WATER FILTRATION PLANT
HARRISON, NY

ELECTRICAL
PANEL BOARD SCHEDULES - SHEET 2

DATE: FEB 2025
HAZEN NO.: 90388-000
CONTRACT NO.: A1364-A
DRAWING NUMBER: E-013

File: C:\USERS\APENA\DOCACCDOCS\HAZEN AND SAWYER\90388-000_RYE_LAKE_FILTRATION\PROJECT FILES\PRO\ECT\WSE\ELECTRICAL\E-013-BID Saved by APENA Save date: 4/15/2025 3:41 PM BY: APENA
PLOT DATE: 4/15/2025 3:41 PM BY: APENA

208/120 VOLTS
3 PHASE, 4 WIRE

LP-1-MCC-1
MAIN BREAKER
150A 3P

TYPE: NEMA 1
MOUNT: SURFACE
LOCATION: ELECTRICAL ROOM 119

DESCRIPTION	TRIP	POLE	CKT No.	KILO-VOLT-AMPERES A	B	C	KILO-VOLT-AMPERES A	B	C	CKT No.	POLE	TRIP	DESCRIPTION
SPARE	20	1	1	-			1.2			2	1	20	FIRE SPRINKLER RISER AND STAIR (SA) - LTG
MOV-1710	20	1	3		0.4			1.2		4	1	20	FIRE SPRINKLER RISER AND STAIR (SA) - RECEPTACLES
P-1810	20	1	5			0.3			1.2	6	1	20	RAW WATER PIPING - LTG AND RECEPTACLES
P-1820	20	1	7	0.3			1.2			8	1	20	STATIC MIXER AND OVERFLOW - LTG AND RECEPTACLES
P-1830	20	1	9		0.3			2.8		10	1	20	CORRIDOR (C01) LTG AND RECEPTACLES - 3
P-1840	20	1	11			0.3			1.2	12	1	20	OUTDOOR LTG (SOUTH WEST) GATE
P-1910	20	1	13	0.3			1.2			14	1	20	OUTDOOR LTG (SOUTH WEST)
ELEC. ROOM 1 LTG 1	20	1	15		1.2			1.2		16	1	20	STAIR (SB) - LTG
ELEC. ROOM 1 LTG 2	20	1	17			1.2			1.2	18	1	20	STAIR (SB) - RECEPTACLES
ELEC. ROOM RECEPTACLES 1	20	1	19	1.2			1.0			20	1	20	P-1850
ELEC. ROOM RECEPTACLES 2	20	1	21		1.2			1.0		22	1	20	P-1860
MENS BATHROOM LTG	20	1	23			1.2			1.2	24	1	20	VESTIBULE , LOBBY AND CONF. ROOM - RECEPTACLES - 2
MENS BATHROOM RECEPTACLES	20	1	25	1.2			2.9			26	2	30	EUH-01
WOMENS BATHROOM LTG	20	1	27		1.2			2.9		28			
WOMENS BATHROOM RECEPTACLES	20	1	29			1.2			2.9	30	2	30	EUH-02
WOMENS LOCKER ROOM - LTG AND RECEPTACLES	20	1	31	1.2			2.9			32			
MENS LOCKER ROOM AND MAINT. CLOSET- LTG	20	1	33		1.2			0.1		34	1	20	EXIT SIGNS
MENS LOCKER ROOM AND MAINT. CLOSET- RECEPTACLES	20	1	35			1.2			1.2	36	1	20	COPY ROOM 209 & CHIEF'S OFFICE 210 RECEPTACLES
VESTIBULE , LOBBY AND CONF. ROOM - LTG	20	1	37	1.2			-			38	1	20	SPARE
VESTIBULE , LOBBY AND CONF. ROOM - RECEPTACLES - 1	20	1	39		1.2			-		40	1	20	SPARE
ELEV. LTG	20	1	41			1.2			-	42	1	20	SPARE

TOTAL	3	4	4
PHASE TOTAL			
	11	13	13

8	9	9	TOTAL
TOTAL LOAD (KVA)			
37			
TOTAL LOAD (A)			
103			

NOTES:
22kAIC
100kA SPD

208/120 VOLTS
3 PHASE, 4 WIRE

LP-2-MCC-1
MAIN BREAKER
80A 3P

TYPE: NEMA 4X
MOUNT: SURFACE
LOCATION: DEWATERING ROOM

DESCRIPTION	TRIP	POLE	CKT No.	KILO-VOLT-AMPERES A	B	C	KILO-VOLT-AMPERES A	B	C	CKT No.	POLE	TRIP	DESCRIPTION
SPARE	20	1	1	-			1.2			2	1	20	HVAC ROOM (208)- RECEPTACLES 2
SPARE	20	1	3		-			0.3		4	1	20	EF-05
P-6330	20	1	5			0.9			0.5	6	1	20	M-6330
P-6340	20	1	7	0.9			0.5			8	1	20	M-6340
DEWATERING ROOM - LTG 1	20	1	9		1.2			0.2		10	1	20	UH-01
DEWATERING ROOM - LTG 2	20	1	11			1.2			0.5	12	1	20	FACP-01
DEWATERING ROOM - RECEPTACLES 1	20	1	13	1.2			1.0			14	2	20	GATE POWER
DEWATERING ROOM - RECEPTACLE 2	20	1	15		1.2			1.0		16			
OUTDOOR LTG. (SOUTH EAST SIDE)	20	1	17			1.2			0.1	18	1	20	EXIT SIGNS
OUTDOOR LTG. (SOUTH EAST SIDE)	20	1	19	1.2			-			20	1	20	SPARE
CORRIDOR (C01) LTG - 2	20	1	21		1.6			-		22	1	20	SPARE
CORRIDOR (C01) RECEPTACLE - 2	20	1	23			1.2			-	24	1	20	SPARE
HVAC ROOM (208)- LTG 1	20	1	25	1.2			-			26	1	20	SPARE
HVAC ROOM (208)- LTG 2	20	1	27		1.2			-		28	1	20	SPARE
HVAC ROOM (208)- RECEPTACLES 1	20	1	29			1.2			-	30	1	20	SPARE

TOTAL	5	5	6
PHASE TOTAL			
	7	7	7

3	2	1	TOTAL
TOTAL LOAD (KVA)			
21			
TOTAL LOAD (A)			
58			

NOTES:
22kAIC
100kA SPD

208/120 VOLTS
3 PHASE, 4 WIRE

LP-3-MCC-1
MAIN BREAKER
100A 3P

TYPE: NEMA 4X
MOUNT: SURFACE
LOCATION: CORRIDOR (SECOND FLOOR)

DESCRIPTION	TRIP	POLE	CKT No.	KILO-VOLT-AMPERES A	B	C	KILO-VOLT-AMPERES A	B	C	CKT No.	POLE	TRIP	DESCRIPTION
MAINT. CLOSET, WC (212 & 213) - LTG & RECEPTACLES	20	1	1	1.2			1.2			2	1	20	FLOCCUTLATOR & SKIMMER AREA - RECEPTACLES - 1
OPEN OFFICE (214) - LTG - 1	20	1	3		1.2			1.2		4	1	20	FLOCCUTLATOR & SKIMMER AREA - RECEPTACLES - 2
OPEN OFFICE (214) - LTG - 2	20	1	5			1.2			1.4	6	1	20	EF-06, EF-08
OPEN OFFICE (214) - RECEPTACLES - 1	20	1	7	1.2			0.4			8	1	20	MOV-3100
OPEN OFFICE (214) - RECEPTACLES - 2	20	1	9		1.2			0.4		10	1	20	MOV-3110
VESTIBULE (210) - LTG	20	1	11			1.2			0.4	12	1	20	MOV-3120
VESTIBULE (210) - RECEPTACLES	20	1	13	1.2			0.4			14	1	20	MOV-3130
ELEV. CONTROL ROOM - LTG & RECEPTACLES	20	1	15	-	1.2			0.4		16	1	20	MOV-3210
SUPPLY ROOM & CHIEF OFFICE (209 & 210) - LTG & RECEPTACLES	20	1	17			1.2			0.4	18	1	20	MOV-3220
HVAC ROOM (215) - LTG - 1	20	1	19	1.2			0.4			20	1	20	MOV-3130
HVAC ROOM (215) - LTG - 2	20	1	21		1.2			0.4		22	1	20	MOV-3230
HVAC ROOM (215) - RECEPTACLES - 1	20	1	23			1.2			0.4	24	1	20	MOV-3140
HVAC ROOM (215) - RECEPTACLES - 2	20	1	25	1.2			0.4			26	1	20	MOV-3240
FLOCCUTLATOR & SKIMMER AREA - LTG - 1	20	1	27		2.0			1.2		28	1	20	CONTROL AND SCADA ROOM - LTG
FLOCCUTLATOR & SKIMMER AREA - LTG - 2	20	1	29			2.0			1.2	30	1	20	CONTROL ROOM - RECEPTACLES
DWH-01	20	3	31	1.7			1.2			32	1	20	CONTROL ROOM - RECEPTACLES
			33		1.7			0.3		34	1	20	GMU-01
			35			1.7			0.3	36	1	20	ET-01
PV-01	20	1	37	0.7			0.3			38	1	20	HWB-01
PV-02	20	1	39		0.7			0.3		40	1	20	HWB-02
RCP-02	20	1	41			0.2			1.2	42	1	20	MICROWAVE

TOTAL	8	9	9
PHASE TOTAL			
	13	13	14

4	4	5	TOTAL
TOTAL LOAD (KVA)			
40			
TOTAL LOAD (A)			
111			

NOTES:
22kAIC
100kA SPD

208/120 VOLTS
3 PHASE, 4 WIRE

LP-1-MCC-2
MAIN BREAKER
175A 3P

TYPE: NEMA 1
MOUNT: SURFACE
LOCATION: ELECTRICAL ROOM 203

DESCRIPTION	TRIP	POLE	CKT No.	KILO-VOLT-AMPERES A	B	C	KILO-VOLT-AMPERES A	B	C	CKT No.	POLE	TRIP	DESCRIPTION
ACCU-04	25	3	1	1.2			1.2			2	1	20	HVAC ROOM (201) - LTG
			3		1.2			1.2		4	1	20	HVAC ROOM (201) - RECEPTACLES
			5			1.2			2.4	6	1	20	CORRIDOR (C03) - LTG
ACCU-06	25	3	7	1.2			-			8	1	20	SPARE
			9		1.2			1.2		10	2	30	ACCU-01
			11			1.2			1.2	12			
ACCU-03	30	2	13	1.2			1.2			14	2	30	ACCU-02
			15		1.2			1.2		16			
SPARE	20	1	17			-			-	18	1	20	SPARE
SPARE	20	1	19	-			-			20	1	20	SPARE
SPARE	20	1	21		-			-		22	1	20	SPARE
ELECTRICAL ROOM - LTG 1	20	1	23			1.2			-	24	1	20	SPARE
ELECTRICAL ROOM - LTG 2	20	1	25	1.2			-			26	1	20	SPARE
ELECTRICAL ROOM - RECEPTACLES 1	20	1	27		1.2			-		28	1	20	SPARE
ELECTRICAL ROOM - RECEPTACLES 2	20	1	29			1.2			2.94	30	2	20	EUH-03
PROCESS ANALYSIS ROOM - LTG	20	1	31	1.2			2.94			32			
PROCESS ANALYSIS ROOM - RECEPTACLES	20	1	33		1.2			2.0		34	1	20	CORRIDOR (C03) - RECEPTACLES
AIR SCOUR - LTG	20	1	35			1.2			2.4	36	1	20	COORIDOR (C04) - LTG
AIR SCOUR - RECEPTACLES	20	1	37	1.2			1.2			38	1	20	COORIDOR (C04) - RECEPTACLES
STOR ROOM - LTG AND RECEPTACLES	20	1	39		1.2			2.9		40	2	20	EUH-04
EXIT SIGNS	20	1	41			0.1			2.90	42			

TOTAL	7	7	6
PHASE TOTAL			
	14	16	18

7	9	12	TOTAL
TOTAL LOAD (KVA)			
47			
TOTAL LOAD (A)			
132			

NOTES:
22kAIC
100kA SPD

WARNING
IT IS A VIOLATION OF SECTION 7209.2 OF THE NEW YORK STATE EDUCATION LAW FOR ANY PERSON, UNLESS ACTING UNDER THE DIRECTION OF A LICENSED PROFESSIONAL ENGINEER, TO ALTER IN ANY WAY PLANS, SPECIFICATIONS, PLATS OR REPORTS TO WHICH THE SEAL OF A PROFESSIONAL ENGINEER HAS BEEN APPLIED. IF AN ITEM BEARING THE SEAL OF A PROFESSIONAL ENGINEER IS ALTERED, THE ALTERING ENGINEER SHALL AFFIX TO THE ITEM HIS SEAL AND THE NOTATION "ALTERED BY" FOLLOWED BY HIS SIGNATURE, THE DATE, AND A SPECIFIC DESCRIPTION OF THE ALTERATION.

REV	ISSUED FOR	DATE	BY

PROJECT ENGINEER: R. FROST
DESIGNED BY: Y. ABDALLA
DRAWN BY: P. NUGENT
CHECKED BY: G. MARKOU
IF THIS BAR DOES NOT MEASURE 1" THEN DRAWING IS NOT TO FULL SCALE 0 1/2" 1"

BID SET

STATE OF NEW YORK · GEORGE MARKOU · 072603 · LICENSED PROFESSIONAL ENGINEER

Hazen
HAZEN AND SAWYER
498 SEVENTH AVENUE, 11th FLOOR
NEW YORK, NEW YORK 10018

WESTCHESTER JOINT WATER WORKS
MAMARONECK, NY

RYE LAKE WATER FILTRATION PLANT
HARRISON, NY

ELECTRICAL
PANEL BOARD SCHEDULES - SHEET 3

DATE: FEB 2025
HAZEN NO.: 90388-000
CONTRACT NO.: A1364-A
DRAWING NUMBER: E-014

File: C:\USERS\APENA\DOCUMENTS\ACCDOCS\HAZEN AND SAWYER\90388-000_RYE_LAKE_FILTRATION\PROJECT FILES\PROJECTWISE\ELECTRICAL\E-014-BID Saved by APENA Save date: 4/15/2025 2:48 PM
PLOT DATE: 4/15/2025 3:41 PM BY: APENA

208/120 VOLTS
3 PHASE, 4 WIRE

LP-2-MCC-2
MAIN BREAKER
100A 3P

TYPE: NEMA 4X
MOUNT: SURFACE
LOCATION: CORRIDOR (C01)

DESCRIPTION	TRIP	POLE	CKT No.	KILO-VOLT-AMPERES A	B	C	KILO-VOLT-AMPERES A	B	C	CKT No.	POLE	TRIP	DESCRIPTION
MOV-3490	20	1	1	0.5			0.5			2	1	20	VCP-5360
MOV-3590	20	1	3		0.5			0.5		4	1	20	VCP-5370
MOV-3690	20	1	5			0.5			0.5	6	1	20	VCP-5380
MOV-3790	20	1	7	0.5			0.6			8	1	20	P-5390
SPARE	20	1	9		-			0.6		10	1	20	P-5400
SPARE	20	1	11			-			0.6	12	1	20	P-5410
EF-01	20	3	13	0.1			0.5			14	1	20	VCP-5460
			15		0.1			0.5		16	1	20	VCP-5470
			17			0.1			1.0	18	1	20	Portable Davit Crane Motor 1 (Wastewater Tanks)
EF-02	20	3	19	0.1			1.0			20	1	20	Portable Davit Crane Motor 2 (Wastewater Tanks)
			21		0.1			1.2		22	1	20	FLUORIDE ROOM - LTG & RECEPTACLES
			23			0.1			1.2	24	1	20	OUTDOOR LTG (NORTH EAST)
VCP-5160	20	1	25	0.5			2.1			26	1	20	SODIUM HYPOCHLORITE ROOM - LTG & RECEPTACLES
VCP-5560	20	1	27		0.5			1.2		28	1	20	COAGULANT - LTG & RECEPTACLES
VCP-5570	20	1	29			0.5			1.2	30	1	20	CORROSION INHIBITOR - LIGHTING & RECEPTACLES
P-5580	20	1	31	0.6			0.1			32	1	20	EXIT SIGNS
P-5590	20	1	33		0.6			0.5		34	1	20	VCP-5170
VCP-5260	20	1	35			0.5			0.5	36	1	20	VCP-5290
VCP-5270	20	1	37	0.5			0.5			38	1	20	VCP-5390
VCP-5280	20	1	39		0.5			2.8		40	1	20	CORRIDOR(C01) - LTG & RECEPTACLES
P-5290	20	1	41			0.6			-	42	1	20	SPARE

TOTAL	3	2	2
PHASE TOTAL			
	8	10	7

5	7	5	TOTAL
TOTAL LOAD (KVA)			
25			
TOTAL LOAD (A)			
69			

NOTES:
22kAIC
100kA SPD

208/120 VOLTS
3 PHASE, 4 WIRE

LP-3-MCC-2
MAIN BREAKER
50A 3P

TYPE: NEMA 4X
MOUNT: SURFACE
LOCATION: FLOCULATOR AREA

DESCRIPTION	TRIP	POLE	CKT No.	KILO-VOLT-AMPERES A	B	C	KILO-VOLT-AMPERES A	B	C	CKT No.	POLE	TRIP	DESCRIPTION
MOV-3310	20	1	1	0.4			1.2			2	1	20	FLOCCULATOR & SKIMMER AREA - LTG
MOV-3320	20	1	3		0.4			1.2		4	1	20	FLOCCULATOR & SKIMMER AREA - RECEPTACLES
MOV-3410	20	1	5			0.4			1.2	6	1	20	FLOCCULATOR & SKIMMER AREA - RECEPTACLES
MOV-3420	20	1	7	0.4			1.2			8	1	20	OUTDOOR LTG (NORTH WEST)
MOV-3510	20	1	9		0.4			1.2		10	1	20	OUTDOOR LTG (NORTH WEST)
MOV-3520	20	1	11			0.4			1.2	12	1	20	FLOCCULATOR & SKIMMER AREA - LTG
MOV-3610	20	1	13	0.4			0.4			14	1	20	MOV-3710
MOV-3620	20	1	15		0.4			0.4		16	1	20	MOV-3720
FLOCULATOR INSIDE TANK LIGHT	20	1	17			0.1			-	18	1	20	SPARE
SPARE	20	1	19	-			-			20	1	20	SPARE
SPARE	20	1	21		-			-		22	1	20	SPARE
SPARE	20	1	23			-			-	24	1	20	SPARE
SPARE	20	1	25	-			-			26	1	20	SPARE
SPARE	20	1	27		-			-		28	1	20	SPARE
SPARE	20	1	29			-			-	30	1	20	SPARE
SPARE	20	1	31	-			-			32	1	20	SPARE
SPARE	20	1	33		-			-		34	1	20	SPARE
SPARE	20	1	35			-			-	36	1	20	SPARE
SPARE	20	1	37	-			-			38	1	20	SPARE
SPARE	20	1	39		-			-		40	1	20	SPARE
SPARE	20	1	41			-			-	42	1	20	SPARE

TOTAL	1	1	1
PHASE TOTAL			
	4	4	3

3	3	2	TOTAL
TOTAL LOAD (KVA)			
11			
TOTAL LOAD (A)			
31			

NOTES:
22kAIC
100kA SPD

208/120 VOLTS
3 PHASE, 4 WIRE

LP-4-MCC-2
MAIN BREAKER
100A 3P

TYPE: NEMA 4X
MOUNT: SURFACE
LOCATION: FILTER WATER PUMPING ROOM

DESCRIPTION	TRIP	POLE	CKT No.	KILO-VOLT-AMPERES A	B	C	KILO-VOLT-AMPERES A	B	C	CKT No.	POLE	TRIP	DESCRIPTION
MOV-3190	20	1	1	0.5			1.2			2	1	20	SODIUM HYDROXIDE ROOM - RECEPTACLES 1
MOV-3290	20	1	3		0.5			1.2		4	1	20	SODIUM HYDROXIDE ROOM - RECEPTACLES 2
MOV-3390	20	1	5			0.5			1.2	6	1	20	SODIUM HYDROXIDE ROOM - LTG 1
EF-03	20	3	7	0.2			1.2			8	1	20	SODIUM HYDROXIDE ROOM - LTG 2
			9		0.2			1.2		10	1	20	PIPE GALLERY EL.406 - LTG-1
			11			0.2			1.2	12	1	20	PIPE GALLERY EL.406 - LTG-2
EF-04	20	3	13	0.2			1.2			14	1	20	PIPE GALLERY EL.406 - LTG-3
			15		0.2			1.2		16	1	20	PIPE GALLERY EL.406 - RECEPTACLES 1
			17			0.2			1.2	18	1	20	PIPE GALLERY EL.406 - RECEPTACLES 2
MOV-7351	20	1	19	0.4			1.2			20	1	20	PIPE GALLERY EL.406 - RECEPTACLES 3
MOV-7361	20	1	21		0.4			1.2		22	1	20	FILTER WATER PUMP ROOM - RECEPTACLES 1
FILTER WATER PUMP ROOM - LTG 1	20	1	23			1.2			1.2	24	1	20	FILTER WATER PUMP ROOM - RECEPTACLES 2
FILTER WATER PUMP ROOM - LTG 2	20	1	25	1.2			1.2			26	1	20	STAIR (SC) & VESTIBLE (124) - LTG
OUTDOOR LTG. (NORTH EAST SIDE) - 1	20	1	27		1.2			1.2		28	1	20	STAIR (SC) & VESTIBULE (124) - RECEPTACLES
OUTDOOR LTG. (NORTH EAST SIDE) - 2	20	1	29			1.2			1.2	30	1	20	ROOF LTG & RECEPTACLES
SPARE	20	1	31	-			1.2			32	1	20	OUTDOOR LTG. (WEST SIDE)
SPARE	20	1	33		-			0.1		34	1	20	EXIT SIGNS FILTERED WATER, SODIUM HYDROXIDE
SPARE	20	1	35			-			-	36	1	20	SPARE
SPARE	20	1	37	-			-			38	1	20	SPARE
SPARE	20	1	39		-			-		40	1	20	SPARE
SPARE	20	1	41			-			-	42	1	20	SPARE

TOTAL	3	3	3
PHASE TOTAL			
	10	9	9

7	6	6	TOTAL
TOTAL LOAD (KVA)			
28			
TOTAL LOAD (A)			
77			

NOTES:
22kAIC
100kA SPD

208/120 VOLTS
3 PHASE, 4 WIRE

LP-5-MCC-2
MAIN BREAKER
100A 3P

TYPE: NEMA 4X
MOUNT: SURFACE
LOCATION: PIPE GALLERY (BASEMENT LEVEL)

DESCRIPTION	TRIP	POLE	CKT No.	KILO-VOLT-AMPERES A	B	C	KILO-VOLT-AMPERES A	B	C	CKT No.	POLE	TRIP	DESCRIPTION
SP-01	20	3	1	0.7			-			2	1	20	SPARE
			3		0.7			-		4	1	20	SPARE
			5			0.7			-	6	1	20	SPARE
SP-02	20	3	7	-			-			8	1	20	SPARE
			9		-			-		10	1	20	SPARE
			11			-			-	12	1	20	SPARE
RCP-01	20	1	13	0.1			-			14	1	20	SPARE
PIPE GALLERY EL.384 - LTG 1	20	1	15		2.0			-		16	1	20	SPARE
SP-03	20	1	17			-			-	18	1	20	SPARE
PIPE GALLERY EL.384 - LTG 2	20	1	19	3.2			-			20	1	20	SPARE
PIPE GALLERY EL.384 - LTG 3	20	1	21		2.0			-		22	1	20	SPARE
PIPE GALLERY EL.384 - RECEPTACLES 1	20	1	23			2.0			-	24	1	20	SPARE
PIPE GALLERY EL.384 - RECEPTACLES 2	20	1	25	1.2			-			26	1	20	SPARE
PIPE GALLERY EL.384 - RECEPTACLES 3	20	1	27		1.2			-		28	1	20	SPARE
PIPE GALLERY EXIT SIGNS	20	1	29			0.1			-	30	1	20	SPARE
SPARE	20	1	31	-			-			32	1	20	SPARE
SPARE	20	1	33		-			-		34	1	20	SPARE
SPARE	20	1	35			-			-	36	1	20	SPARE
SPARE	20	1	37	-			-			38	1	20	SPARE
SPARE	20	1	39		-			-		40	1	20	SPARE
SPARE	20	1	41			-			-	42	1	20	SPARE

TOTAL	5	6	3
PHASE TOTAL			
	5	6	3

0	0	0	TOTAL
TOTAL LOAD (KVA)			
14			
TOTAL LOAD (A)			
39			

NOTES:
22kAIC
100kA SPD

WARNING
IT IS A VIOLATION OF SECTION 7209.2 OF THE NEW YORK STATE EDUCATION LAW FOR ANY PERSON, UNLESS ACTING UNDER THE DIRECTION OF A LICENSED PROFESSIONAL ENGINEER, TO ALTER IN ANY WAY PLANS, SPECIFICATIONS, PLATS OR REPORTS TO WHICH THE SEAL OF A PROFESSIONAL ENGINEER HAS BEEN AFFIXED. IF AN ITEM BEARING THE SEAL OF A PROFESSIONAL ENGINEER IS ALTERED, THE ALTERING ENGINEER SHALL AFFIX TO THE ITEM HIS SEAL AND THE NOTATION "ALTERED BY" FOLLOWED BY HIS SIGNATURE, THE DATE, AND A SPECIFIC DESCRIPTION OF THE ALTERATION.

REV	ISSUED FOR	DATE	BY

PROJECT ENGINEER: R. FROST
DESIGNED BY: Y. ABDALLA
DRAWN BY: P. NUGENT
CHECKED BY: G. MARKOU

IF THIS BAR DOES NOT MEASURE 1" THEN DRAWING IS NOT TO FULL SCALE 0 1/2" 1"

BID SET



Hazen
HAZEN AND SAWYER
498 SEVENTH AVENUE, 11th FLOOR
NEW YORK, NEW YORK 10018

WESTCHESTER JOINT WATER WORKS
MAMARONECK, NY

RYE LAKE WATER FILTRATION PLANT
HARRISON, NY

ELECTRICAL
PANEL BOARD SCHEDULES - SHEET 4

DATE: FEB 2025
HAZEN NO.: 90388-000
CONTRACT NO.: A1364-A
DRAWING NUMBER: E-015

File: C:\USERS\APENA\DOCACCDOCS\HAZEN AND SAWYER\90388-000_RYE_LAKE_FILTRATION\PROJECT FILES\PROJECTWISE\ELECTRICAL\E-015-BID Saved by APENA Save date: 4/15/2025 2:52 PM
PLOT DATE: 4/15/2025 3:41 PM BY: APENA

208/120 VOLTS
3 PHASE, 4 WIRE

IP-1-MCC-1
MAIN BREAKER
100A 3P

TYPE: NEMA 1
MOUNT: SURFACE
LOCATION: ELECTRICAL ROOM 119

DESCRIPTION	TRIP	POLE	CKT No.	KILO-VOLT-AMPERES A	B	C	KILO-VOLT-AMPERES A	B	C	CKT No.	POLE	TRIP	DESCRIPTION
RIO-21	20	1	1	2.4			5.0			2	1		
FIT-1711	20	1	3		0.06			5.0		4	1	50	IP2-MCC-1
AIT-1811	20	1	5			0.06			5.0	6	1		
AIT-1812	20	1	7	0.06			5.0			8	1		
AIT-1813	20	1	9		0.06			5.0		10	1	50	IP3-MCC-1
AIT-1821	20	1	11			0.06			5.0	12	1		
AIT-1822	20	1	13	0.06			0.5			14	1	20	PAGING/TELEPHONE CABINET
AIT-1823	20	1	15		0.06			-		16	1	20	SPARE
LIT-1901	20	1	17			0.06			-	18	1	20	SPARE
LIT-1902	20	1	19	0.06			-			20	1	20	SPARE
AIT-1911	20	1	21		0.06			-		22	1	20	SPARE
AIT-1912	20	1	23			0.06			-	24	1	20	SPARE
LIT-2111	20	1	25	0.06			-			26	1	20	SPARE
LIT-2211	20	1	27		0.06			-		28	1	20	SPARE
LIT-2311	20	1	29			0.06			-	30	1	20	SPARE
LIT-2411	20	1	31	0.06			-			32	1	20	SPARE
LIT-2511	20	1	33		0.06			-		34	1	20	SPARE
LIT-2611	20	1	35			0.06			-	36	1	20	SPARE
LIT-2711	20	1	37	0.06			-			38	1	20	SPARE
RIO-MCC-1	20	1	39		2.4			-		40	1	20	SPARE
SPARE	20	1	41			-			-	42	1	20	SPARE

TOTAL	3	0	0
PHASE TOTAL			
	13	10	10

11	10	10	TOTAL
TOTAL LOAD (KVA)			
34			
TOTAL LOAD (A)			
94			

NOTES:
22kAIC
100kA SPD

208/120 VOLTS
3 PHASE, 4 WIRE

IP-2-MCC-1
MAIN BREAKER
50A 3P

TYPE: NEMA 4X
MOUNT: SURFACE
LOCATION: CORRIDOR (C01)

DESCRIPTION	TRIP	POLE	CKT No.	KILO-VOLT-AMPERES A	B	C	KILO-VOLT-AMPERES A	B	C	CKT No.	POLE	TRIP	DESCRIPTION
SCADA ROOM - Receptacles	20	1	1	1.0			0.06			2	1	20	LIT-6414
RLWTP PLC PANEL	20	1	3		2.40			0.06		4	1	20	YSK-6420
FILTER-PLC 1	20	1	5			2.40			0.06	6	1	20	YSK-6430
SPARE	20	1	7				0.06			8	1	20	LIT-6431
CLIENTS WORK STATION 3	20	1	9		1.80			0.06		10	1	20	YSK-6440
SPARE	20	1	11						0.06	12	1	20	LIT-6441
CENT-PLC-1	20	1	13	2.40			0.1			14	1	20	LAS-5100
CENT-PLC-2	20	1	15		2.40			0.1		16	1	20	LAS-5200
LIT-6111	20	1	17			0.06			0.1	18	1	20	LAS-5300
LIT-6211	20	1	19	0.1			0.1			20	1	20	LAS-5400
LIT-6251	20	1	21		0.1			0.1		22	1	20	LAS-5500
FIT-6330	20	1	23			0.06			-	24	1	20	SPARE
YSK-6410	20	1	25	0.1			-			26	1	20	SPARE
LIT-6412	20	1	27		0.1			-		28	1	20	SPARE
LIT-6413	20	1	29			0.06			-	30	1	20	SPARE
WIT-6312	20	1	31	0.06			-			32	1	20	SPARE
WIT-6342	20	1	33		0.06			-		34	1	20	SPARE
SECURITY PANEL	20	1	35			0.10			-	36	1	20	SPARE
SPARE	20	1	37	-			-			38	1	20	SPARE
SPARE	20	1	39		-			-		40	1	20	SPARE
SPARE	20	1	41			-			-	42	1	20	SPARE

TOTAL	4	7	3
PHASE TOTAL			
	4	7	3

0	0	0	TOTAL
TOTAL LOAD (KVA)			
14			
TOTAL LOAD (A)			
39			

NOTES:
22kAIC
100kA SPD

208/120 VOLTS
3 PHASE, 4 WIRE

IP-3-MCC-1
MAIN BREAKER
50A 3P

TYPE: NEMA 4X
MOUNT: SURFACE
LOCATION: PIPE GALLERY (PLATFORM AREA)

DESCRIPTION	TRIP	POLE	CKT No.	KILO-VOLT-AMPERES A	B	C	KILO-VOLT-AMPERES A	B	C	CKT No.	POLE	TRIP	DESCRIPTION
AIT-3113	20	1	1	0.06			0.06			2	1	20	LSH-5300
AIT-3114	20	1	3		0.06			0.06		4	1	20	LIT-5311
FIT-3116	20	1	5			0.06			0.06	6	1	20	LSHH-5312
FIT-3118	20	1	7	0.06			0.06			8	1	20	LIT-5321
AIT-3213	20	1	9		0.06			0.06		10	1	20	LSHH-5322
AIT-3214	20	1	11			0.06			0.06	12	1	20	LIT-5351
FIT-3216	20	1	13	0.06			-			14	1	20	SPARE
FIT-3218	20	1	15		0.06			-		16	1	20	SPARE
RIO-70	20	1	17			2.50			-	18	1	20	SPARE
SPARE	20	1	19	-			-			20	1	20	SPARE
SPARE	20	1	21		-			-		22	1	20	SPARE
SPARE	20	1	23			-			-	24	1	20	SPARE

TOTAL	0	0	3
PHASE TOTAL			
	0	0	3

0	0	0	TOTAL
TOTAL LOAD (KVA)			
3			
TOTAL LOAD (A)			
9			

NOTES:
22kAIC
100 kA SPD

208/120 VOLTS
3 PHASE, 4 WIRE

IP-1-MCC-2
MAIN BREAKER
100A 3P

TYPE: NEMA 1
MOUNT: SURFACE
LOCATION: ELECTRICAL ROOM 203

DESCRIPTION	TRIP	POLE	CKT No.	KILO-VOLT-AMPERES A	B	C	KILO-VOLT-AMPERES A	B	C	CKT No.	POLE	TRIP	DESCRIPTION
RIO-MCC-2	20	1	1	1.0			-			2			
IP-3-MCC-2	50	3	3	2.0				-		4	3	20	SPARE
			5		2.0				-	6			
			7			2.0	-			8			
IP-4-MCC-2	50	3	9	2.0				-		10	3	50	SPARE
			11		2.0				-	12			
			13			2.0	0.4			14	1	20	MOV-3330
IP-6-MCC-2	50	3	15	2.0				0.4		16	1	20	MOV-3430
			17		2.0				0.4	18	1	20	MOV-3530
			19	-		2.0	0.4			20	1	20	MOV-3630
SPARE	20	1	21		-			0.4		22	1	20	MOV-3730
SPARE	20	1	23			-			0.4	24	1	20	MOV-3340
SPARE	20	1	25	-			0.4			26	1	20	MOV-3440
SPARE	20	1	27		-			0.4		28	1	20	MOV-3540
SPARE	20	1	29			-			0.4	30	1	20	MOV-3640

TOTAL	7	6	6
PHASE TOTAL			
	8	7	7

1	1	1	TOTAL
TOTAL LOAD (KVA)			
23			
TOTAL LOAD (A)			
63			

NOTES:
22kAIC
100kA SPD

208/120 VOLTS
3 PHASE, 4 WIRE

IP-2-MCC-2
MAIN BREAKER
100A 3P

TYPE: NEMA 1
MOUNT: SURFACE
LOCATION: ELECTRICAL ROOM 203

DESCRIPTION	TRIP	POLE	CKT No.	KILO-VOLT-AMPERES A	B	C	KILO-VOLT-AMPERES A	B	C	CKT No.	POLE	TRIP	DESCRIPTION
SPARE	20	1	1	-			-			2			
SPARE	50	3	3		-			-		4	3	50	SPARE
			5			-			-	6			
			7	-			-			8			
IP-5-MCC-2	50	3	9		2.0			-		10	3	50	SPARE
			11			2.0			-	12			
			13	2.0			0.4			14	1	20	MOV-3740
IP-7-MCC-2	50	3	15		2.0			0.4		16	1	20	MOV-7120
			17			2.0			0.4	18	1	20	MOV-5297
			19	2.0			0.4			20	1	20	MOV-5291
SPARE	20	1	21		-			0.4		22	1	20	MOV-5292
SPARE	20	1	23			-			0.4	24	1	20	MOV-5293
SPARE	20	1	25	-			0.4			26	1	20	MOV-5294
SPARE	20	1	27		-			0.4		28	1	20	MOV-5295
SPARE	20	1	29			-			0.4	30	1	20	MOV-5296

TOTAL	4	4	4
PHASE TOTAL			
	5	5	5

1	1	1	TOTAL
TOTAL LOAD (KVA)			
16			
TOTAL LOAD (A)			
43			

NOTES:
22kAIC
100 kA SPD

WARNING
IT IS A VIOLATION OF SECTION 7209.2 OF THE NEW YORK STATE EDUCATION LAW FOR ANY PERSON, UNLESS ACTING UNDER THE DIRECTION OF A LICENSED PROFESSIONAL ENGINEER, TO ALTER IN ANY WAY PLANS, SPECIFICATIONS, PLATS OR REPORTS TO WHICH THE SEAL OF A PROFESSIONAL ENGINEER HAS BEEN APPLIED. IF AN ITEM BEARING THE SEAL OF A PROFESSIONAL ENGINEER IS ALTERED, THE ALTERING ENGINEER SHALL AFFIX TO THE ITEM HIS SEAL AND THE NOTATION "ALTERED BY" FOLLOWED BY HIS SIGNATURE, THE DATE, AND A SPECIFIC DESCRIPTION OF THE ALTERATION.

REV	ISSUED FOR	DATE	BY

PROJECT ENGINEER: R. FROST
DESIGNED BY: Y. ABDALLA
DRAWN BY: P. NUGENT
CHECKED BY: G. MARKOU
IF THIS BAR DOES NOT MEASURE 1" THEN DRAWING IS NOT TO FULL SCALE 0 1/2" 1"

BID SET

STATE OF NEW YORK · GEORGE MARKOU · 072603 · LICENSED PROFESSIONAL ENGINEER

Hazen

HAZEN AND SAWYER
498 SEVENTH AVENUE, 11th FLOOR
NEW YORK, NEW YORK 10018

WESTCHESTER JOINT WATER WORKS
MAMARONECK, NY

RYE LAKE WATER FILTRATION PLANT
HARRISON, NY

ELECTRICAL
PANEL BOARD SCHEDULES - SHEET 5

DATE: FEB 2025
HAZEN NO.: 90388-000
CONTRACT NO.: A1364-A
DRAWING NUMBER: E-016

File: C:\USERS\APENA\DOCACCDOCS\HAZEN AND SAWYER\90388-000_RYE_LAKE_FILTRATION\PROJECT FILES\PROJECTWISE\ELECTRICAL\E-016-BID Saved by APENA Save date: 4/15/2025 2:56 PM
PLOT DATE: 4/15/2025 3:42 PM BY: APENA

208/120 VOLTS
3 PHASE, 4 WIRE

IP-3-MCC-2
MAIN BREAKER
50A 3P

TYPE: NEMA 4X
MOUNT: SURFACE
LOCATION: CORRIDOR (C02-1)

DESCRIPTION	TRIP	POLE	CKT No.	KILO-VOLT-AMPERES A	B	C	KILO-VOLT-AMPERES A	B	C	CKT No.	POLE	TRIP	DESCRIPTION
RIO-22	20	1	1	2.40			0.3			2	1	20	PREACTION SPRINKLER SYSTEM
RIO-31	20	1	3		2.40			0.2		4	1	20	CLEAN AGENT SYSTEM
RIO-32	20	1	5			2.40			1.5	6	2	20	WH-03 RM-205
AIT-3312	20	1	7	0.06			1.5			8			
AIT-3612	20	1	9		0.06			2.4		10	1	20	RLWTP PLC Panel
SPARE	20	1	11			-			-	12	1	20	SPARE
SPARE	20	1	13	-			-			14	1	20	SPARE
SPARE	20	1	15		-			-		16	1	20	SPARE
SPARE	20	1	17			-			-	18	1	20	SPARE
SPARE	20	1	19	-			-			20	1	20	SPARE
SPARE	20	1	21		-			-		22	1	20	SPARE
SECURITY PANEL	20	1	23			0.5			-	24	1	20	SPARE

TOTAL	2	2	3
PHASE TOTAL			
4	5	4	

2	3	2	TOTAL
TOTAL LOAD (KVA)			
14			
TOTAL LOAD (A)			
38			

NOTES:
22kAIC
100kA SPD

208/120 VOLTS
3 PHASE, 4 WIRE

IP-4-MCC-2
MAIN BREAKER
50A 3P

TYPE: NEMA 4X
MOUNT: SURFACE
LOCATION: PIPE GALLERY (PLATFORM AREA)

DESCRIPTION	TRIP	POLE	CKT No.	KILO-VOLT-AMPERES A	B	C	KILO-VOLT-AMPERES A	B	C	CKT No.	POLE	TRIP	DESCRIPTION
RIO-33	20	1	1	2.40			0.06			2	1	20	FIT-3516
RIO-34	20	1	3		2.40			0.06		4	1	20	FIT-3518
AIT-3313	20	1	5			0.06			2.4	6	1	20	RIO-70
AIT-3314	20	1	7	0.06			-			8	1	20	SPARE
FIT-3316	20	1	9		0.06			-		10	1	20	SPARE
FIT-3318	20	1	11			0.06			-	12	1	20	SPARE
AIT-3413	20	1	13	0.06			-			14	1	20	SPARE
AIT-3414	20	1	15		0.06			-		16	1	20	SPARE
FIT-3416	20	1	17			0.06			-	18	1	20	SPARE
FIT-3418	20	1	19	0.06			-			20	1	20	SPARE
AIT-3513	20	1	21		0.06			-		22	1	20	SPARE
AIT-3514	20	1	23			0.06			-	24	1	20	SPARE

TOTAL	3	3	0
PHASE TOTAL			
3	3	3	

0	0	2	TOTAL
TOTAL LOAD (KVA)			
8			
TOTAL LOAD (A)			
22			

NOTES:
22kAIC
100kA SPD

208/120 VOLTS
3 PHASE, 4 WIRE

IP-5-MCC-2
MAIN BREAKER
50A 3P

TYPE: NEMA 4X
MOUNT: SURFACE
LOCATION: PIPE GALLERY (PLATFORM AREA)

DESCRIPTION	TRIP	POLE	CKT No.	KILO-VOLT-AMPERES A	B	C	KILO-VOLT-AMPERES A	B	C	CKT No.	POLE	TRIP	DESCRIPTION
AIT-3613	20	1	1	0.06			-			2	1	20	SPARE
AIT-3614	20	1	3		0.06			-		4	1	20	SPARE
FIT-3616	20	1	5			0.06			-	6	1	20	SPARE
FIT-3618	20	1	7	0.06			-			8	1	20	SPARE
AIT-3713	20	1	9		0.06			-		10	1	20	SPARE
AIT-3714	20	1	11			0.06			-	12	1	20	SPARE
FIT-3716	20	1	13	0.06			-			14	1	20	SPARE
FIT-3718	20	1	15		0.06			-		16	1	20	SPARE
LIT-7511	20	1	17			0.06			-	18	1	20	SPARE
LIT-7551	20	1	19	0.06			-			20	1	20	SPARE
FIT-7591	20	1	21		0.06			-		22	1	20	SPARE
SPARE	20	1	23			-			-	24	1	20	SPARE

TOTAL	0	0	0
PHASE TOTAL			
0	0	0	

0	0	0	TOTAL
TOTAL LOAD (KVA)			
1			
TOTAL LOAD (A)			
2			

NOTES:
22kAIC
100kA SPD

208/120 VOLTS
3 PHASE, 4 WIRE

IP-6-MCC-2
MAIN BREAKER
50A 3P

TYPE: NEMA 4X
MOUNT: SURFACE
LOCATION: PIPE GALLERY (PLATFORM AREA)

DESCRIPTION	TRIP	POLE	CKT No.	KILO-VOLT-AMPERES A	B	C	KILO-VOLT-AMPERES A	B	C	CKT No.	POLE	TRIP	DESCRIPTION
LIT-7350	20	1	1	0.06			-			2	1	20	SPARE
LIT-7360	20	1	3		0.06			-		4	1	20	SPARE
FIT-7370	20	1	5			0.06			0.06	6	1	20	AIT-4792
AIT-4111	20	1	7	0.06			0.06			8	1	20	AIT-4793
AIT-4112	20	1	9		0.06			0.06		10	1	20	AIT-4794
AIT-4113	20	1	11			0.06			2.4	12	1	20	PLC-UV-001
LIT-4201	20	1	13	0.06			2.4			14	1	20	PLC-UV-002
LIT-4301	20	1	15		0.06			2.4		16	1	20	PLC-UV-003
LIT-7401	20	1	17			0.06			-	18	1	20	SPARE
FIT-7403	20	1	19	0.06			-			20	1	20	SPARE
AIT-4711	20	1	21		0.06			-		22	1	20	SPARE
AIT-4712	20	1	23			0.06			-	24	1	20	SPARE
FIT-4412	20	1	25	0.06			-			26	1	20	SPARE
FIT-4512	20	1	27		0.06			-		28	1	20	SPARE
FIT-4612	20	1	29			0.06			-	30	1	20	SPARE
S-4110	20	1	31	0.06			-			32	1	20	SPARE
S-4120	20	1	33		0.06			-		34	1	20	SPARE
S-4710	20	1	35			0.06			-	36	1	20	SPARE
RIO-60	20	1	37	2.40			-			38	1	20	SPARE
SPARE	20	1	39		-			-		40	1	20	SPARE
SPARE	20	1	41			-			-	42	1	20	SPARE

TOTAL	3	0	0
PHASE TOTAL			
5	3	3	

2	2	2	TOTAL
TOTAL LOAD (KVA)			
11			
TOTAL LOAD (A)			
30			

NOTES:
22kAIC
100kA SPD

208/120 VOLTS
3 PHASE, 4 WIRE

IP-7-MCC-2
MAIN BREAKER
50A 3P

TYPE: NEMA 4X
MOUNT: SURFACE
LOCATION: CORRIDOR(C01)

DESCRIPTION	TRIP	POLE	CKT No.	KILO-VOLT-AMPERES A	B	C	KILO-VOLT-AMPERES A	B	C	CKT No.	POLE	TRIP	DESCRIPTION
RIO-40	20	1	1	2.40			0.06			2	1	20	LIT-5411
RIO-50	20	1	3		2.40			0.06		4	1	20	LSHH-5412
LSH-5100	20	1	5			0.06			0.06	6	1	20	LIT-5451
LSHH-5112	20	1	7	0.06			0.06			8	1	20	LIT-5511
LSHH-5122	20	1	9		0.06			0.06		10	1	20	LSH-5511
LSH-5200	20	1	11			0.06			0.06	12	1	20	LSHH-5512
LIT-5211	20	1	13	0.06			0.06			14	1	20	WIT-5551
LSHH-5212	20	1	15		0.06			1.0		16	1	20	LCP-6330
LIT-5221	20	1	17			0.06			1.0	18	1	20	LCP-6340
LSHH-5222	20	1	19	0.06			-			20	1	20	SPARE
LIT-5251	20	1	21		0.06			-		22	1	20	SPARE
LSH-5400	20	1	23			0.06			-	24	1	20	SPARE

TOTAL	3	3	0
PHASE TOTAL			
3	4	1	

0	1	1	TOTAL
TOTAL LOAD (KVA)			
8			
TOTAL LOAD (A)			
22			

NOTES:
22kAIC
100kA SPD

WARNING
IT IS A VIOLATION OF SECTION 7209.2 OF THE NEW YORK STATE EDUCATION LAW FOR ANY PERSON, UNLESS ACTING UNDER THE DIRECTION OF A LICENSED PROFESSIONAL ENGINEER, TO ALTER IN ANY WAY PLANS, SPECIFICATIONS, PLATS OR REPORTS TO WHICH THE SEAL OF A PROFESSIONAL ENGINEER HAS BEEN APPLIED. IF AN ITEM BEARING THE SEAL OF A PROFESSIONAL ENGINEER IS ALTERED, THE ALTERING ENGINEER SHALL AFFIX TO THE ITEM HIS SEAL AND THE NOTATION "ALTERED BY" FOLLOWED BY HIS SIGNATURE, THE DATE, AND A SPECIFIC DESCRIPTION OF THE ALTERATION.

REV	ISSUED FOR	DATE	BY

PROJECT ENGINEER: R. FROST
DESIGNED BY: Y. ABDALLA
DRAWN BY: P. NUGENT
CHECKED BY: G. MARKOU
IF THIS BAR DOES NOT MEASURE 1" THEN DRAWING IS NOT TO FULL SCALE 0 1/2" 1"

BID SET

R. GEORGE MARKOU — 072603 — STATE OF NEW YORK — LICENSED PROFESSIONAL ENGINEER

Hazen
HAZEN AND SAWYER
498 SEVENTH AVENUE, 11th FLOOR
NEW YORK, NEW YORK 10018

WESTCHESTER JOINT WATER WORKS
MAMARONECK, NY

RYE LAKE WATER FILTRATION PLANT
HARRISON, NY

ELECTRICAL
PANEL BOARD SCHEDULES - SHEET 6

DATE: FEB 2025
HAZEN NO.: 90388-000
CONTRACT NO.: A1364-A
DRAWING NUMBER: E-017

File: C:\USERS\APENA\DCACCDOCS\HAZEN AND SAWYER\90388-000_RYE_LAKE_FILTRATION\PROJECT FILES\PROJECTWISE\ELECTRICAL\E-017 Saved by APENA Save date: 4/15/2025 3:01 PM
PLOT DATE: 4/15/2025 3:42 PM BY: APENA

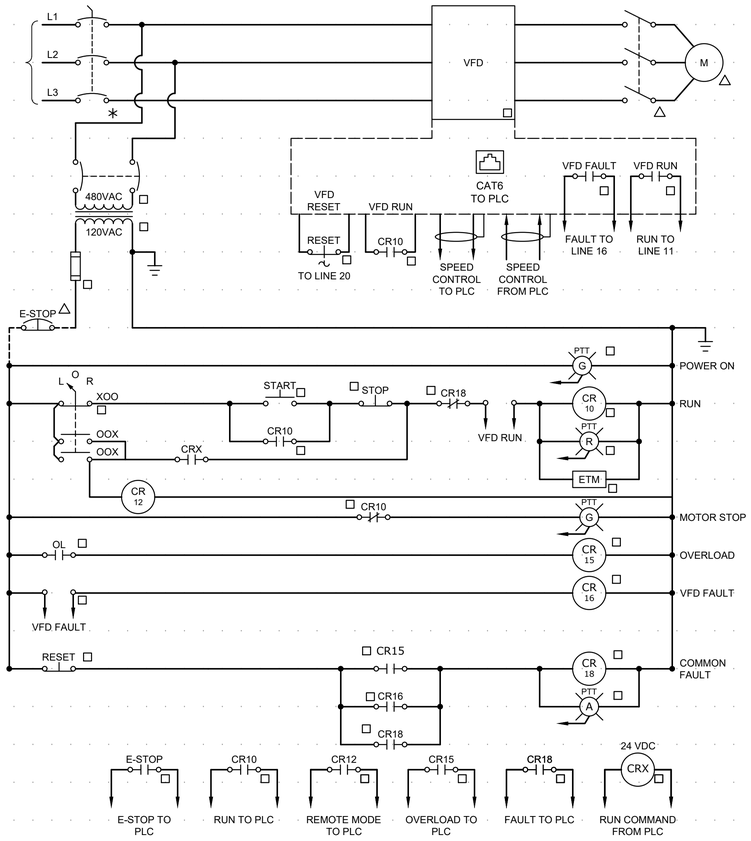

FILTERED WATER PUMPS, FILTER BACKWASH PUMPS, DAF RECYCLE PUMPS, WASTE WASHWATER RECYCLE PUMPS, FLOCCULATORS, FLOATED SOLIDS TRANSFER, DEWATERING FEED PUMPS AND DAF SKIMMERS

EWD N0.1

FILTERED WATER PUMPS NO.X	BACKWASH PUMPS NO.X	DAF RECYCLE PUMPS NO.X
FILTERED WATER PUMP NO.1 (PUMP-4210)	BACKWASH PUMP NO.1 (PUMP-7410)	DAF RECYCLE PUMP NO.1 (PUMP-7210)
FILTERED WATER PUMP NO.2 (PUMP-4220)	BACKWASH PUMP NO.2 (PUMP-7420)	DAF RECYCLE PUMP NO.2 (PUMP-7220)
FILTERED WATER PUMP NO.3 (PUMP-4230)	BACKWASH PUMP NO.3 (PUMP-7430)	DAF RECYCLE PUMP NO.3 (PUMP-7230)
FILTERED WATER PUMP NO.4 (PUMP-4310)		DAF RECYCLE PUMP NO.4 (PUMP-7240)
FILTERED WATER PUMP NO.5 (PUMP-4320)		DAF RECYCLE PUMP NO.5 (PUMP-7250)
FILTERED WATER PUMP NO.6 (PUMP-4330)		

WASTE WASHWATER RECYCLE PUMPS NO.X
WASTE WASHWATER RECYCLE PUMP NO.1 (PUMP-7510)
WASTE WASHWATER RECYCLE PUMP NO.2 (PUMP-7520)
WASTE WASHWATER RECYCLE PUMP NO.3 (PUMP-7560)
WASTE WASHWATER RECYCLE PUMP NO.4 (PUMP-7570)

DEWATERING FEED PUMP NO.X
DEWATERING FEED PUMP NO.1 (P-6230)
DEWATERING FEED PUMP NO.2 (P-6270)

FLOCCULATOR NO.X
FLOCCULATOR NO.1 (A-2120)
FLOCCULATOR NO.2 (A-2130)
FLOCCULATOR NO.3 (A-2220)
FLOCCULATOR NO.4 (A-2230)
FLOCCULATOR NO.5 (A-2320)
FLOCCULATOR NO.6 (A-2330)
FLOCCULATOR NO.7 (A-2420)
FLOCCULATOR NO.8 (A-2430)
FLOCCULATOR NO.9 (A-2520)
FLOCCULATOR NO.10 (A-2530)
FLOCCULATOR NO.11 (A-2620)
FLOCCULATOR NO.12 (A-2630)
FLOCCULATOR NO.13 (A-2720)
FLOCCULATOR NO.14 (A-2730)

FLOATED SOLIDS TRANSFER PUMP NO.X
FLOATED SOLIDS TRANSFER PUMP NO.1 (P-6120)
FLOATED SOLIDS TRANSFER PUMP NO.2 (P-6130)

DAF SKIMMER NO.X
DAF SKIMMER NO.1 (SKMR-3191)
DAF SKIMMER NO.2 (SKMR-3291)
DAF SKIMMER NO.3 (SKMR-3391)
DAF SKIMMER NO.4 (SKMR-3491)
DAF SKIMMER NO.5 (SKMR-3591)
DAF SKIMMER NO.6 (SKMR-3691)
DAF SKIMMER NO.7 (SKMR-3791)

WARNING
IT IS A VIOLATION OF SECTION 7209.2 OF THE NEW YORK STATE EDUCATION LAW FOR ANY PERSON, UNLESS ACTING UNDER THE DIRECTION OF A LICENSED PROFESSIONAL ENGINEER, TO ALTER IN ANY WAY PLANS, SPECIFICATIONS, PLATS OR REPORTS TO WHICH THE SEAL OF A PROFESSIONAL ENGINEER HAS BEEN AFFIXED. IF AN ITEM BEARING THE SEAL OF A PROFESSIONAL ENGINEER IS ALTERED, THE ALTERING ENGINEER SHALL AFFIX TO THE ITEM HIS SEAL AND THE NOTATION "ALTERED BY" FOLLOWED BY HIS SIGNATURE, THE DATE, AND A SPECIFIC DESCRIPTION OF THE ALTERATION.

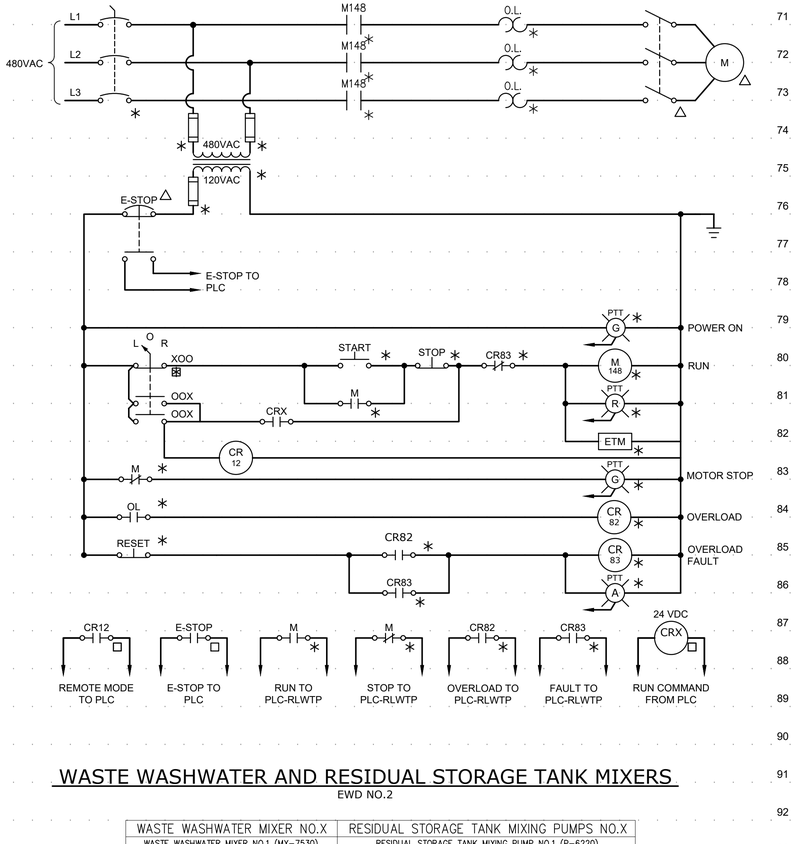

WASTE WASHWATER AND RESIDUAL STORAGE TANK MIXERS

EWD NO.2

WASTE WASHWATER MIXER NO.X	RESIDUAL STORAGE TANK MIXING PUMPS NO.X
WASTE WASHWATER MIXER NO.1 (MX-7530)	RESIDUAL STORAGE TANK MIXING PUMP NO.1 (P-6220)
WASTE WASHWATER MIXER NO.2 (MX-7580)	RESIDUAL STORAGE TANK MIXING PUMP NO.2 (P-6270)

REV	ISSUED FOR	DATE	BY

PROJECT ENGINEER:	R. FROST
DESIGNED BY:	Y. ABDALLA
DRAWN BY:	R. CHUNG
CHECKED BY:	G. MARKOU

IF THIS BAR DOES NOT MEASURE 1" THEN DRAWING IS NOT TO FULL SCALE 0 1/2" 1"

BID SET



Hazen

HAZEN AND SAWYER
498 SEVENTH AVENUE, 11th FLOOR
NEW YORK, NEW YORK 10018

WESTCHESTER JOINT WATER WORKS
MAMARONECK, NY

RYE LAKE WATER FILTRATION PLANT
HARRISON, NY

ELECTRICAL
WIRING DIAGRAM - SHEET 1

DATE:	FEB 2025
HAZEN NO.:	90388-000
CONTRACT NO.:	A1364-A
DRAWING NUMBER:	E-018

File: C:\USERS\APENA\DOCACCDOCS\HAZEN AND SAWYER\90388-000_RYE_LAKE_FILTRATION\PROJECT FILES\PROJECTWISE\ELECTRICAL\E-018 Saved by OKREMEN Save date: 2/7/2025 4:05 PM
PLOT DATE: 4/15/2025 3:43 PM BY: APENA

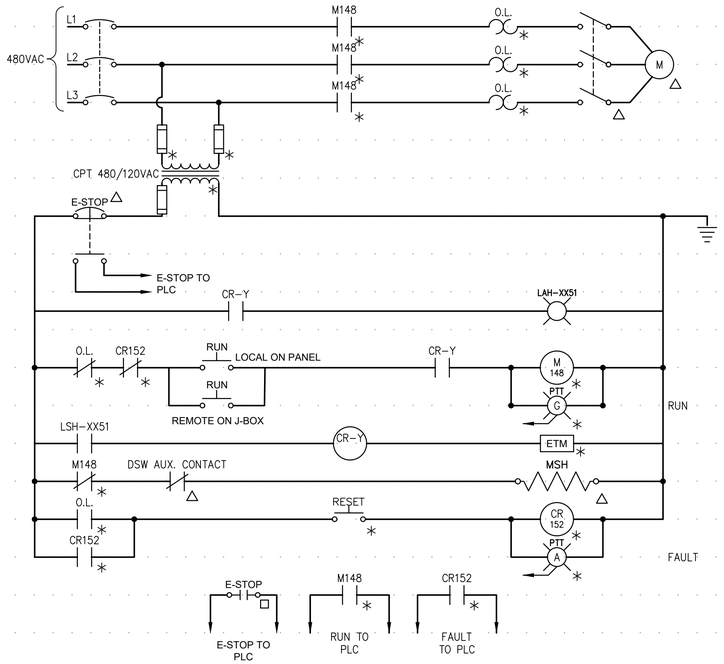

COAGULANT, PACL, NAOH, PHA, HFS, TRANSFER PUMPS

EWD N0.4

COAGULANT TRANSFER PUMPS NO.X	PACL TRANSFER PUMPS NO.X	NAOH TRANSFER PUMPS NO.X
COAGULANT TRANSFER PUMP NO.1 (P-5130)	PACL TRANSFER PUMP NO.1 (P-5230)	NAOH TRANSFER PUMP NO.1 (P-5330)
COAGULANT TRANSFER PUMP NO.2 (P-5140)	PACL TRANSFER PUMP NO.2 (P-5240)	NAOH TRANSFER PUMP NO.2 (P-5340)
PHA TRANSFER PUMPS NO.X	**HFS TRANSFER PUMPS NO.X**	
PHA TRANSFER PUMP NO.1 (P-5430)	HFS TRANSFER PUMP NO.1 (P-5530)	
PHA TRANSFER PUMP NO.2 (P-5440)	HFS TRANSFER PUMP NO.2 (P-5540)	

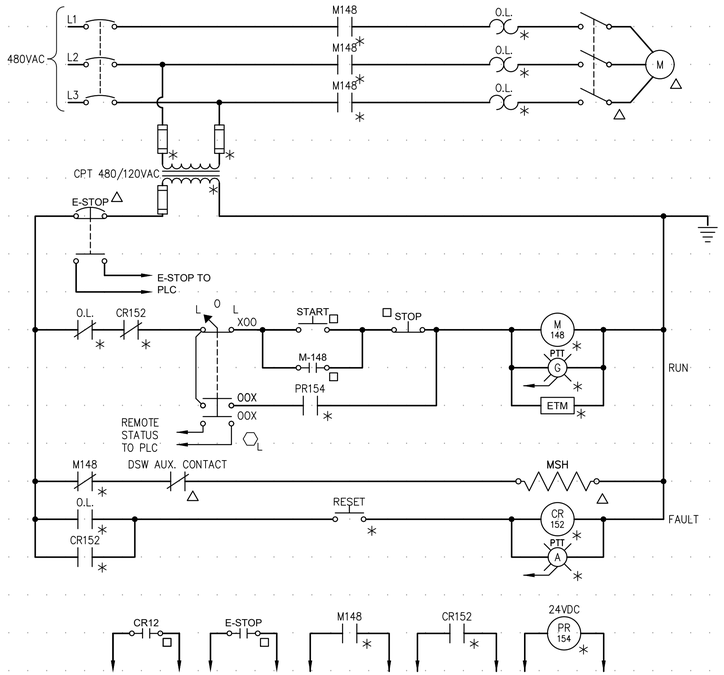

RESIDUAL STORAGE TANK MIXING PUMPS

EWD N0.5

RESIDUAL STORAGE TANK MIXING PUMP NO.X
RESIDUAL STORAGE TANK MIXING PUMP NO.1 (P-6220)
RESIDUAL STORAGE TANK MIXING PUMP NO.2 (P-6260)

WARNING
IT IS A VIOLATION OF SECTION 7209.2 OF THE NEW YORK STATE EDUCATION LAW FOR ANY PERSON, UNLESS ACTING UNDER THE DIRECTION OF A LICENSED PROFESSIONAL ENGINEER, TO ALTER IN ANY WAY PLANS, SPECIFICATIONS, PLATS OR REPORTS TO WHICH THE SEAL OF A PROFESSIONAL ENGINEER HAS BEEN APPLIED. IF AN ITEM BEARING THE SEAL OF A PROFESSIONAL ENGINEER IS ALTERED, THE ALTERING ENGINEER SHALL AFFIX TO THE ITEM HIS SEAL AND THE NOTATION "ALTERED BY" FOLLOWED BY HIS SIGNATURE, THE DATE, AND A SPECIFIC DESCRIPTION OF THE ALTERATION.

REV	ISSUED FOR	DATE	BY

PROJECT ENGINEER: R. FROST
DESIGNED BY: Y. ABDALLA
DRAWN BY: R. CHUNG
CHECKED BY: G. MARKOU
IF THIS BAR DOES NOT MEASURE 1" THEN DRAWING IS NOT TO FULL SCALE 0 1/2" 1"

BID SET



Hazen
HAZEN AND SAWYER
498 SEVENTH AVENUE, 11th FLOOR
NEW YORK, NEW YORK 10018

WESTCHESTER JOINT WATER WORKS
MAMARONECK, NY

RYE LAKE WATER FILTRATION PLANT
HARRISON, NY

ELECTRICAL
WIRING DIAGRAM - SHEET 2

DATE: FEB 2025
HAZEN NO.: 90388-000
CONTRACT NO.: A1364-A
DRAWING NUMBER: E-019

File: C:\USERS\APENA\DCACDOCS\HAZEN AND SAWYER\90388-000_RYE_LAKE_FILTRATION\PROJECT FILES\PROJECTWISE\ELECTRICAL\E-019 Saved by OKRIEMEN Save date: 2/7/2025 4:05 PM
PLOT DATE: 4/15/2025 3:43 PM BY: APENA

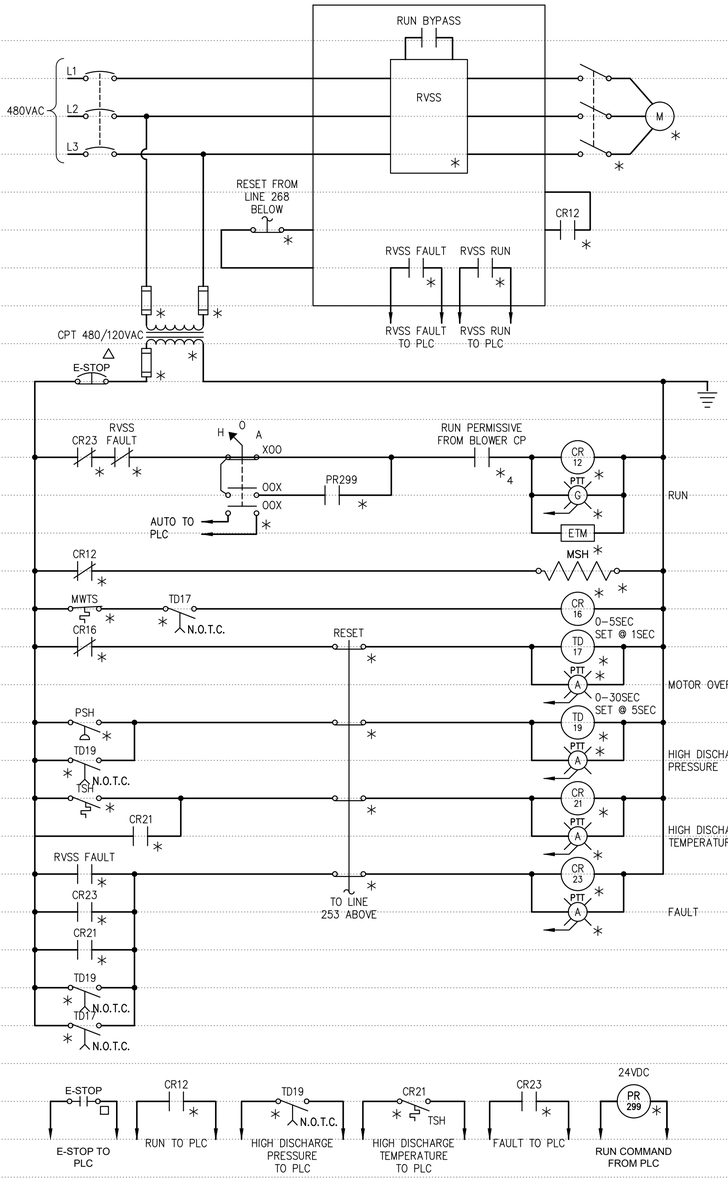

AIR SCOUR BLOWER

EWD NO.8

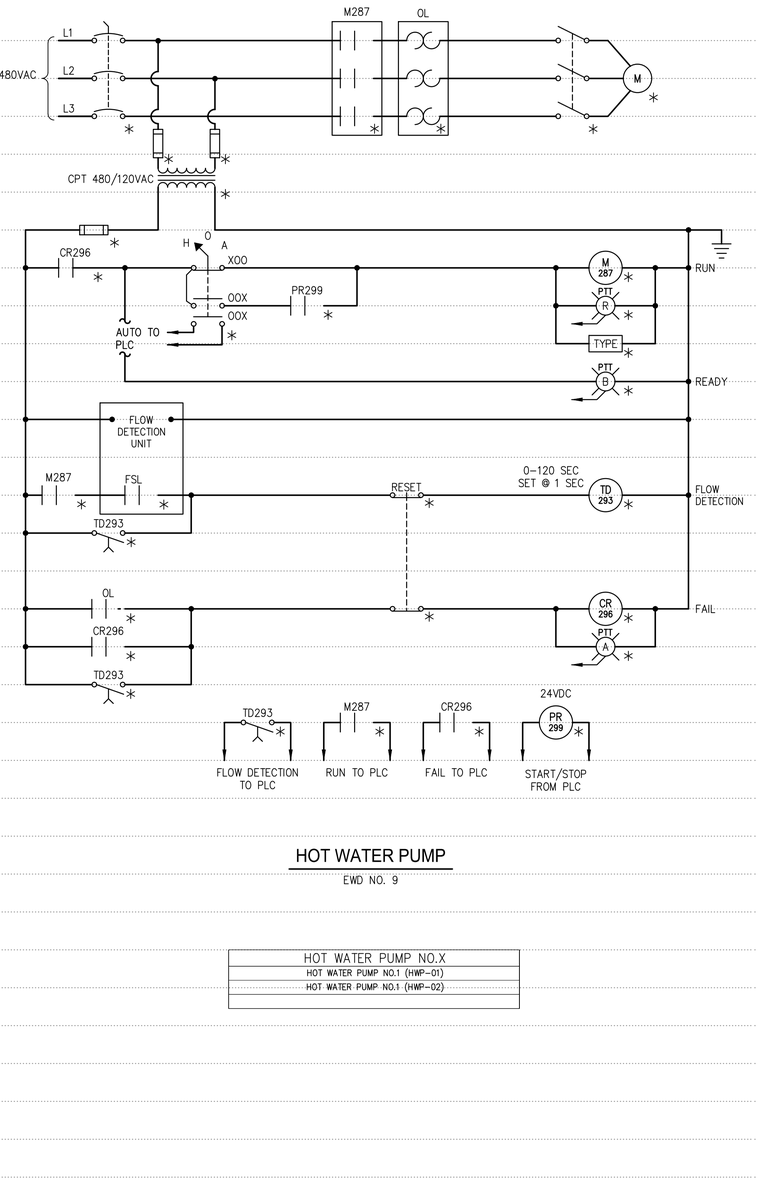

HOT WATER PUMP

EWD NO. 9

HOT WATER PUMP NO.X
HOT WATER PUMP NO.1 (HWP-01)
HOT WATER PUMP NO.1 (HWP-02)

WARNING
IT IS A VIOLATION OF SECTION 7209.2 OF THE NEW YORK STATE EDUCATION LAW FOR ANY PERSON, UNLESS ACTING UNDER THE DIRECTION OF A LICENSED PROFESSIONAL ENGINEER, TO ALTER IN ANY WAY PLANS, SPECIFICATIONS, PLATS OR REPORTS TO WHICH THE SEAL OF A PROFESSIONAL ENGINEER HAS BEEN APPLIED. IF AN ITEM BEARING THE SEAL OF A PROFESSIONAL ENGINEER IS ALTERED, THE ALTERING ENGINEER SHALL AFFIX TO THE ITEM HIS SEAL AND THE NOTATION "ALTERED BY" FOLLOWED BY HIS SIGNATURE, THE DATE, AND A SPECIFIC DESCRIPTION OF THE ALTERATION.

REV	ISSUED FOR	DATE	BY

PROJECT ENGINEER: R. FROST
DESIGNED BY: Y. ABDALLA
DRAWN BY: R. CHUNG
CHECKED BY: G. MARKOU
IF THIS BAR DOES NOT MEASURE 1" THEN DRAWING IS NOT TO FULL SCALE 0 1/2" 1"

BID SET

STATE OF NEW YORK · JORGE MARKOU · 072603 · LICENSED PROFESSIONAL ENGINEER

Hazen

HAZEN AND SAWYER
498 SEVENTH AVENUE, 11th FLOOR
NEW YORK, NEW YORK 10018

WESTCHESTER JOINT WATER WORKS
MAMARONECK, NY

RYE LAKE WATER FILTRATION PLANT
HARRISON, NY

ELECTRICAL
WIRING DIAGRAM - SHEET 3

DATE: FEB 2025
HAZEN NO.: 90388-000
CONTRACT NO.: A1364-A
DRAWING NUMBER: E-020

File: C:\USERS\APENA\DC\ACCDOCS\HAZEN AND SAWYER\90388-000_RYE_LAKE_FILTRATION\PROJECT FILES\PROJECTWISE\ELECTRICAL\E-020 Saved by OKREMEN Save date: 2/7/2025 4:06 PM
PLOT DATE: 4/15/2025 3:43 PM BY: APENA

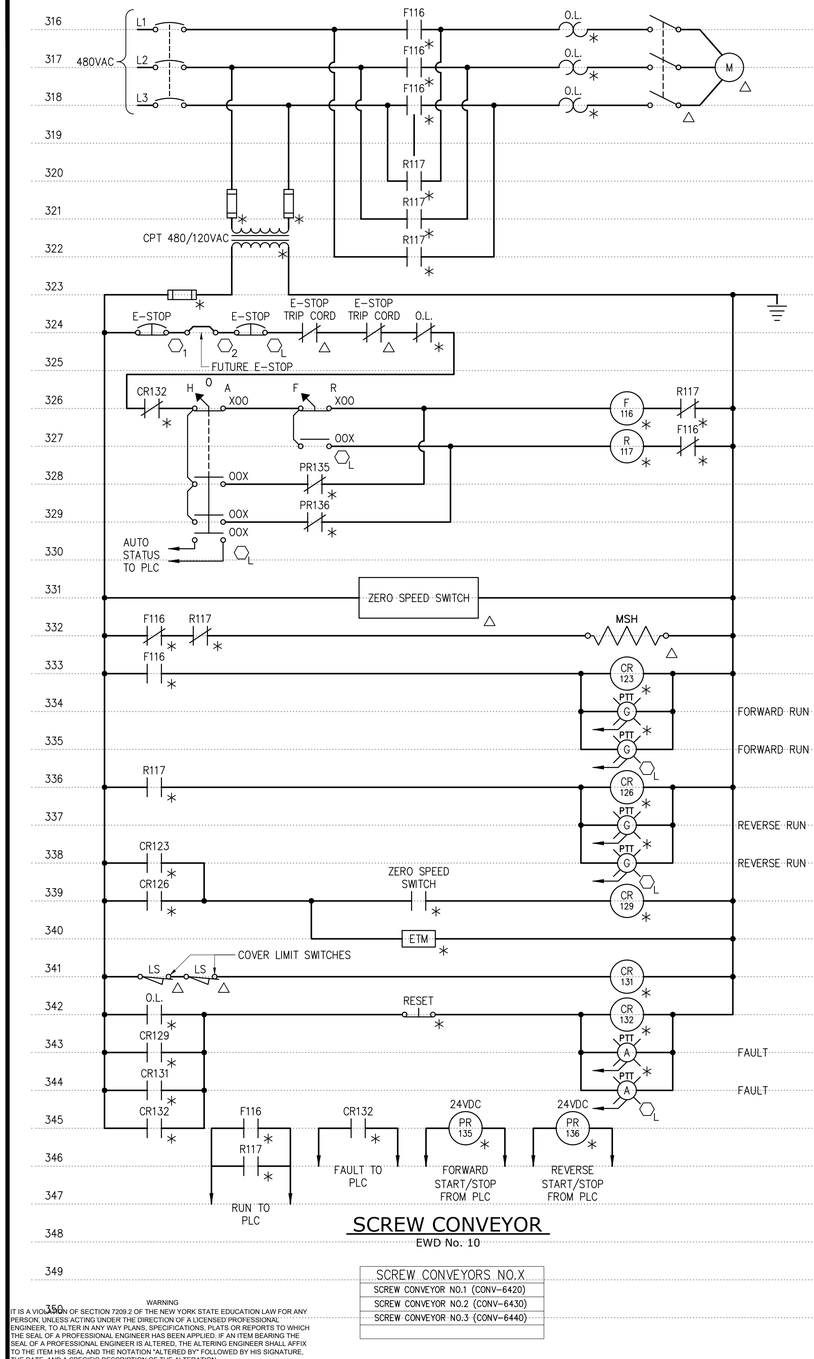

SCREW CONVEYOR

EWD No. 10

SCREW CONVEYORS NO.X
SCREW CONVEYOR NO.1 (CONV-6420)
SCREW CONVEYOR NO.2 (CONV-6430)
SCREW CONVEYOR NO.3 (CONV-6440)

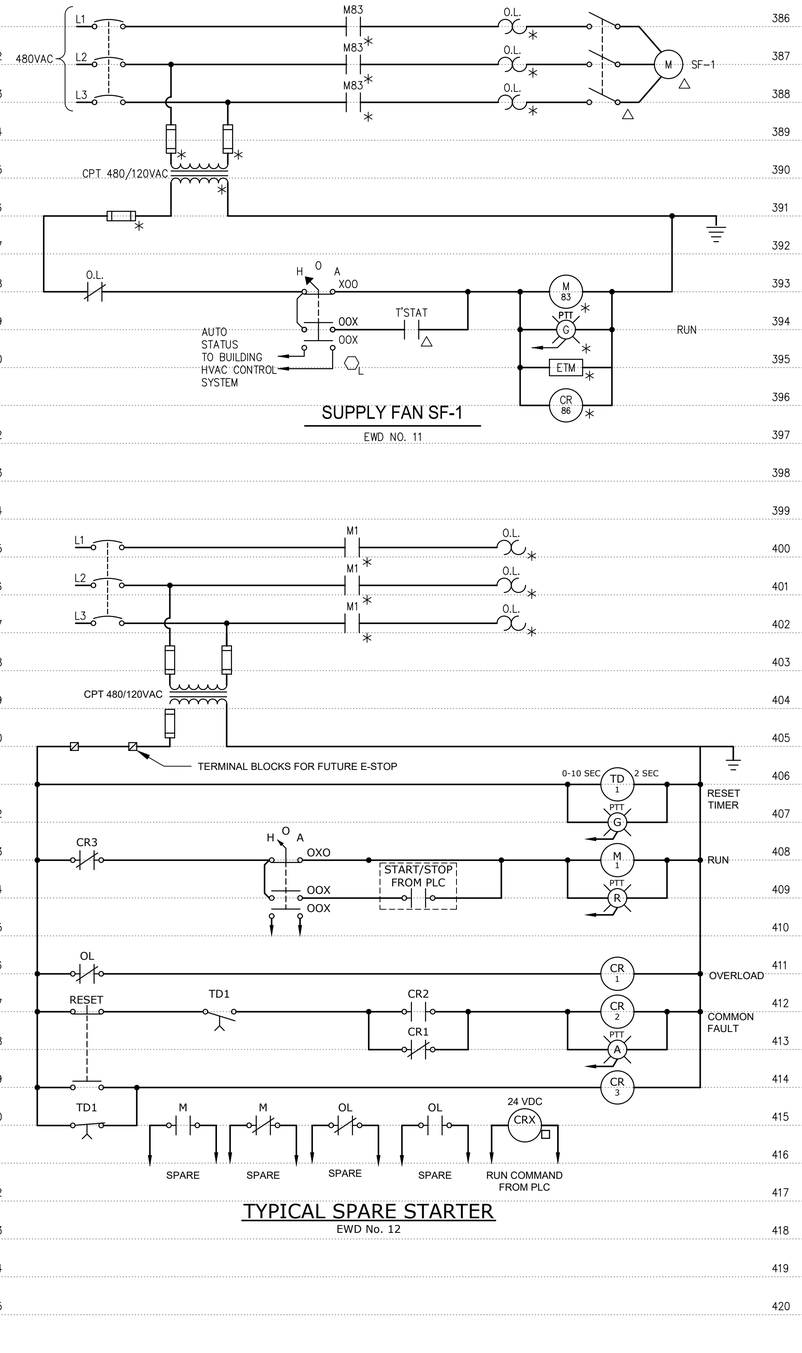

SUPPLY FAN SF-1

EWD NO. 11

TYPICAL SPARE STARTER

EWD No. 12

WARNING
IT IS A VIOLATION OF SECTION 7209.2 OF THE NEW YORK STATE EDUCATION LAW FOR ANY PERSON, UNLESS ACTING UNDER THE DIRECTION OF A LICENSED PROFESSIONAL ENGINEER, TO ALTER IN ANY WAY PLANS, SPECIFICATIONS, PLATS OR REPORTS TO WHICH THE SEAL OF A PROFESSIONAL ENGINEER HAS BEEN APPLIED. IF AN ITEM BEARING THE SEAL OF A PROFESSIONAL ENGINEER IS ALTERED, THE ALTERING ENGINEER SHALL AFFIX TO THE ITEM HIS SEAL AND THE NOTATION "ALTERED BY" FOLLOWED BY HIS SIGNATURE, THE DATE, AND A SPECIFIC DESCRIPTION OF THE ALTERATION.

REV	ISSUED FOR	DATE	BY

PROJECT ENGINEER: R. FROST
DESIGNED BY: Y. ABDALLA
DRAWN BY: R. CHUNG
CHECKED BY: G. MARKOU
IF THIS BAR DOES NOT MEASURE 1" THEN DRAWING IS NOT TO FULL SCALE 0 1/2" 1"

BID SET

STATE OF NEW YORK · GEORGE MARKOU · 072603 · LICENSED PROFESSIONAL ENGINEER

Hazen

HAZEN AND SAWYER
498 SEVENTH AVENUE, 11th FLOOR
NEW YORK, NEW YORK 10018

WESTCHESTER JOINT WATER WORKS
MAMARONECK, NY

RYE LAKE WATER FILTRATION PLANT
HARRISON, NY

ELECTRICAL
WIRING DIAGRAM - SHEET 4

DATE: FEB 2025
HAZEN NO.: 90388-000
CONTRACT NO.: A1364-A
DRAWING NUMBER: E-021

File: C:\USERS\APENA\DC\ACCDOCS\HAZEN AND SAWYER\90388-000_RYE_LAKE_FILTRATION\PROJECT FILES\PROJECTWISE\ELECTRICAL\E-021 Saved by OKREMEN Save date: 2/7/2025 4:06 PM
PLOT DATE: 4/15/2025 3:43 PM BY: APENA

NOTES:

1. SEE PLAN DRAWINGS FOR DEVICE LOCATIONS. CONTRACTOR SHALL LOCATE ALL DEVICES AS REQUIRED AND PER ENGINEER APPROVAL.
2. CIRCUIT WIRING SHOWN IS FOR INFORMATION ONLY AND IS GENERAL IN NATURE. CONTRACTOR SHALL WIRE SYSTEM PER SUPPLIER'S CERTIFIED SHOP DRAWINGS.
3. CONTRACTOR SHALL FURNISH AND INSTALL AUXILIARY DEVICES AS REQUIRED FOR PROPER OPERATION, WHETHER SHOWN OR NOT.
4. FACP SHALL HAVE INTELLIGENT NETWORK ANNUNCIATOR.
5. ALL INITIATING AND AUDIO/VISUAL DEVICES SHALL BE ADDRESSABLE.
6. THE NUMBER OF ZONES INDICATED IS APPROXIMATE. THE CONTRACTOR SHALL PROVIDE ZONES AS REQUIRED IN ACCORDANCE WITH THE MANUFACTURER'S RECOMMENDATIONS, NYC BUILDING CODE AND THE NFPA 72.
7. ON EACH OF THE PULL STATIONS, INSTALL A CODE CARD.
8. UPON COMPLETION OF WORK, FACP PROGRAMMING SOFTWARE SHALL BE TURNED OVER TO THE OWNER.

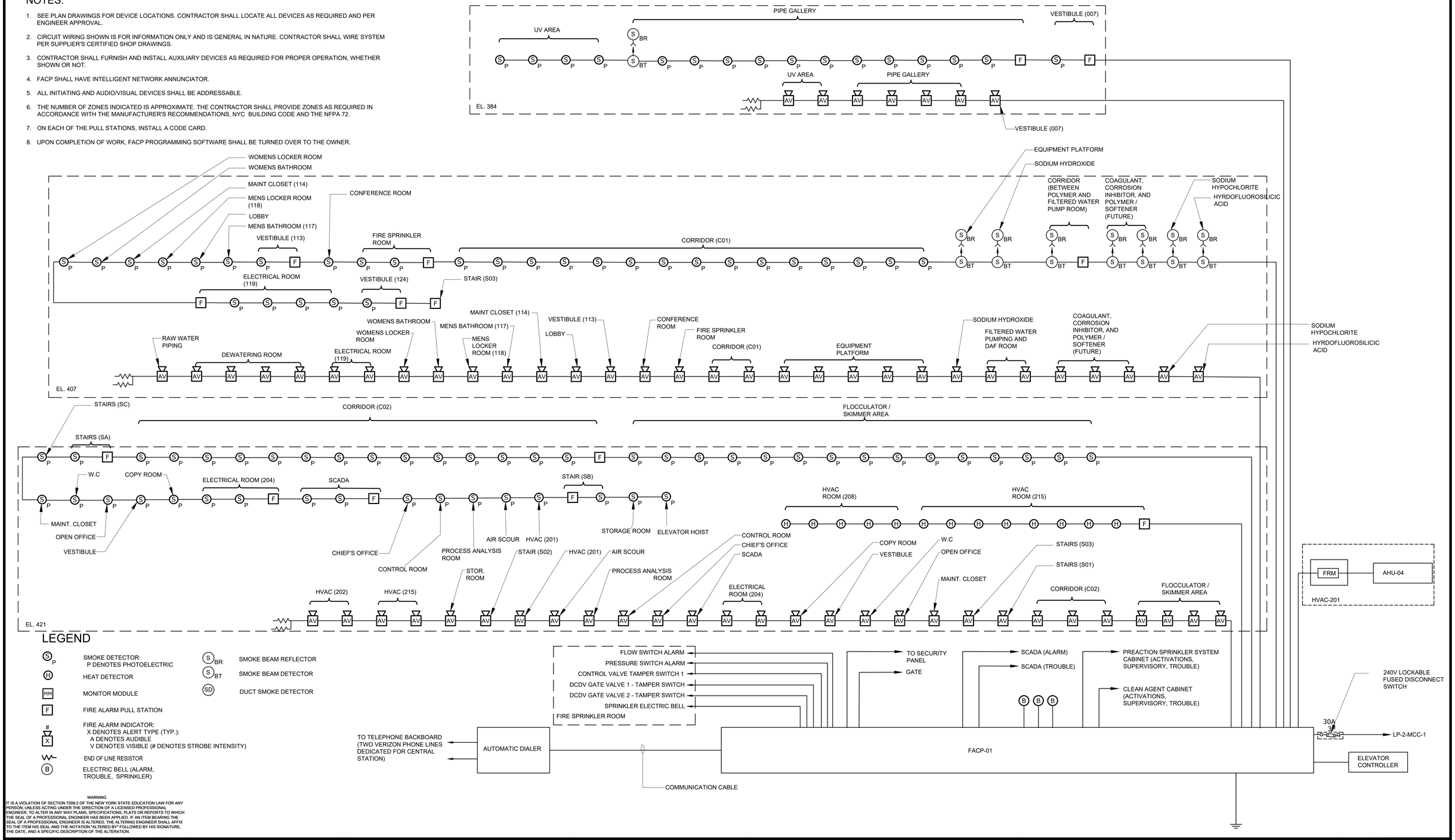

LEGEND

- SMOKE DETECTOR: P DENOTES PHOTOELECTRIC
- HEAT DETECTOR
- MONITOR MODULE
- FIRE ALARM PULL STATION
- FIRE ALARM INDICATOR: X DENOTES ALERT TYPE (TYP.): A DENOTES AUDIBLE, V DENOTES VISIBLE (# DENOTES STROBE INTENSITY)
- END OF LINE RESISTOR
- ELECTRIC BELL (ALARM, TROUBLE, SPRINKLER)
- SMOKE BEAM REFLECTOR
- SMOKE BEAM DETECTOR
- DUCT SMOKE DETECTOR

WARNING
IT IS A VIOLATION OF SECTION 7209.2 OF THE NEW YORK STATE EDUCATION LAW FOR ANY PERSON, UNLESS ACTING UNDER THE DIRECTION OF A LICENSED PROFESSIONAL ENGINEER, TO ALTER IN ANY WAY PLANS, SPECIFICATIONS, PLATS OR REPORTS TO WHICH THE SEAL OF A PROFESSIONAL ENGINEER HAS BEEN AFFIXED. IF AN ITEM BEARING THE SEAL OF A PROFESSIONAL ENGINEER IS ALTERED, THE ALTERING ENGINEER SHALL AFFIX TO THE ITEM HIS SEAL AND THE NOTATION "ALTERED BY" FOLLOWED BY HIS SIGNATURE, THE DATE, AND A SPECIFIC DESCRIPTION OF THE ALTERATION.

REV	ISSUED FOR	DATE	BY

PROJECT ENGINEER:	R. FROST
DESIGNED BY:	Y. ABDALLA
DRAWN BY:	P. NUGENT
CHECKED BY:	G. MARKOU
IF THIS BAR DOES NOT MEASURE 1" THEN DRAWING IS NOT TO FULL SCALE	0 1/2" 1"

BID SET

STATE OF NEW YORK · GEORGE MARKOU · 022603 · LICENSED PROFESSIONAL ENGINEER

Hazen
HAZEN AND SAWYER
498 SEVENTH AVENUE, 11th FLOOR
NEW YORK, NEW YORK 10018

WESTCHESTER JOINT WATER WORKS
MAMARONECK, NY

RYE LAKE WATER FILTRATION PLANT
HARRISON, NY

ELECTRICAL
FIRE ALARM SYSTEM RISER DIAGRAM - SHEET 1

DATE:	FEB 2025
HAZEN NO.:	90388-000
CONTRACT NO.:	A1364-A
DRAWING NUMBER:	E-022

File: C:\USERS\APENA\DOCACCDOCS\HAZEN AND SAWYER\90388-000_RYE_LAKE_FILTRATION\PROJECT FILES\PROJECTWISE\ELECTRICAL\E-022 Saved by OKREMEN Save date: 2/18/2025 1:43 PM
PLOT DATE: 4/15/2025 3:43 PM BY: APENA

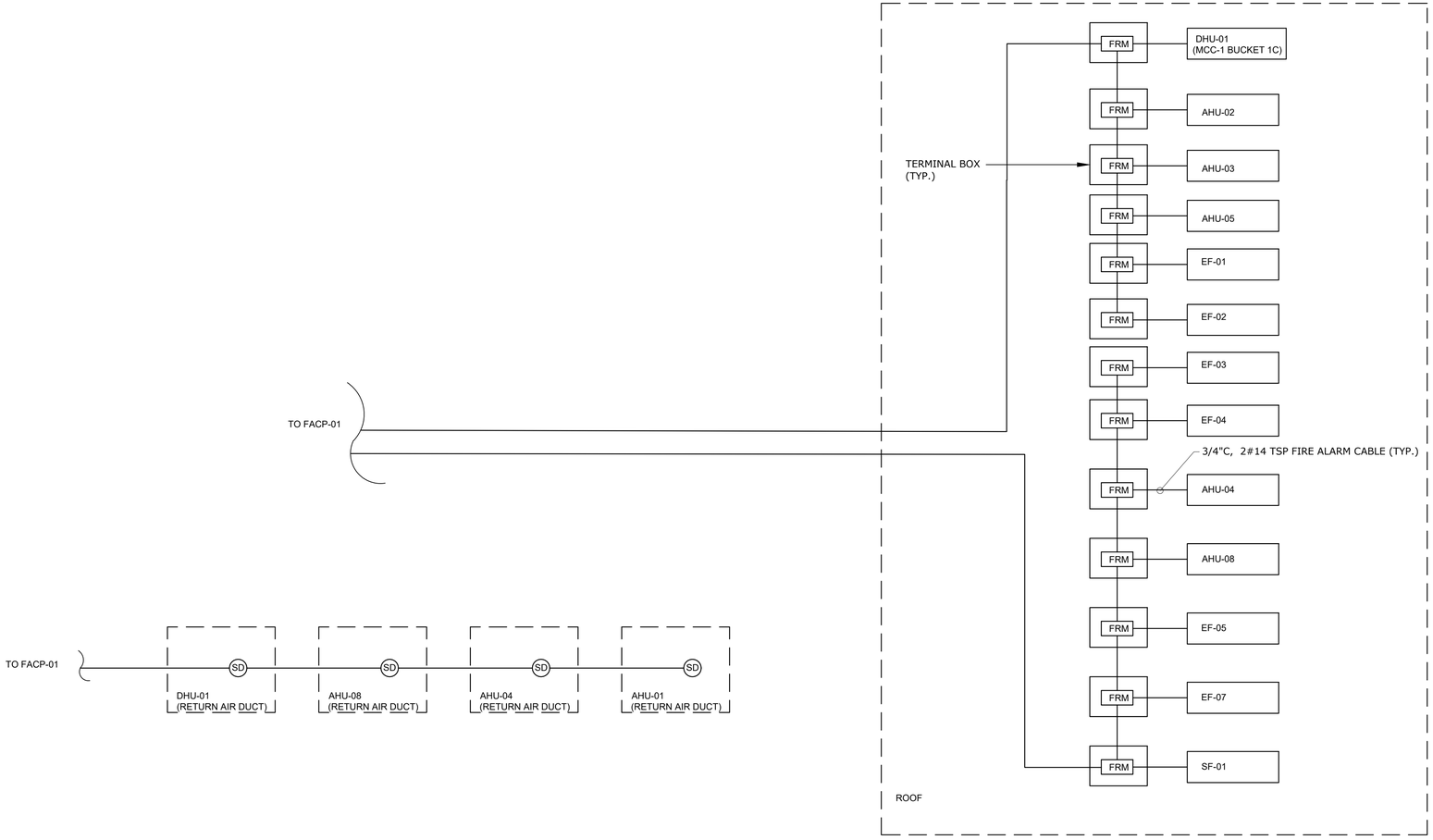

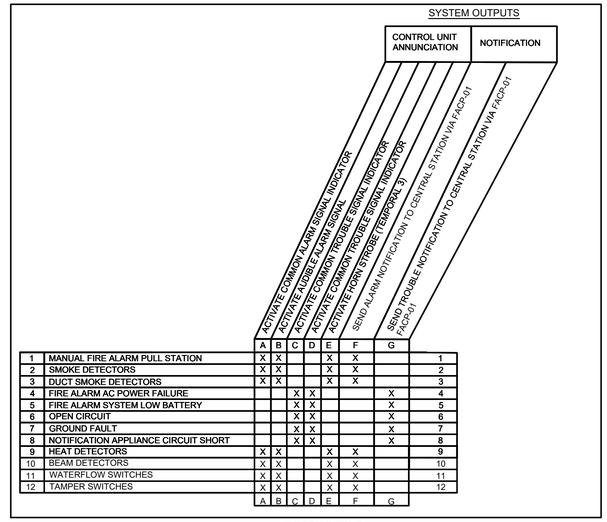

		A	B	C	D	E	F	G	
1	MANUAL FIRE ALARM PULL STATION	X	X			X	X		1
2	SMOKE DETECTORS	X	X			X	X		2
3	DUCT SMOKE DETECTORS	X	X			X	X		3
4	FIRE ALARM AC POWER FAILURE			X	X			X	4
5	FIRE ALARM SYSTEM LOW BATTERY			X	X			X	5
6	OPEN CIRCUIT			X	X			X	6
7	GROUND FAULT			X	X			X	7
8	NOTIFICATION APPLIANCE CIRCUIT SHORT			X	X			X	8
9	HEAT DETECTORS	X	X			X	X		9
10	BEAM DETECTORS	X	X			X	X		10
11	WATERFLOW SWITCHES	X	X			X	X		11
12	TAMPER SWITCHES	X	X			X	X		12
		A	B	C	D	E	F	G	

SYSTEM MATRIX

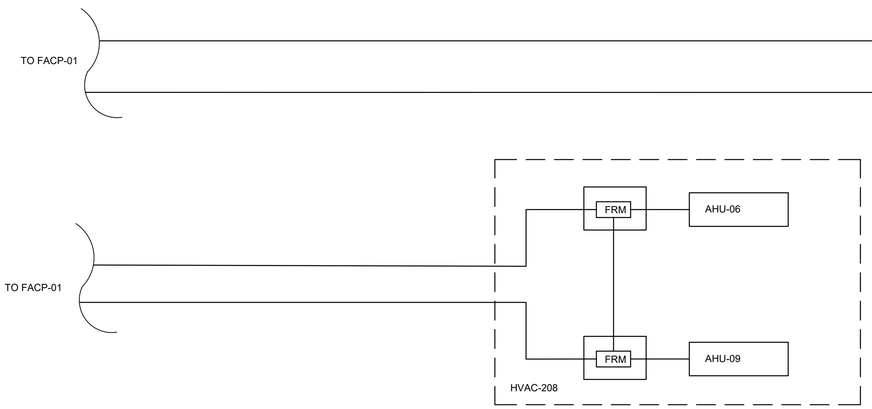

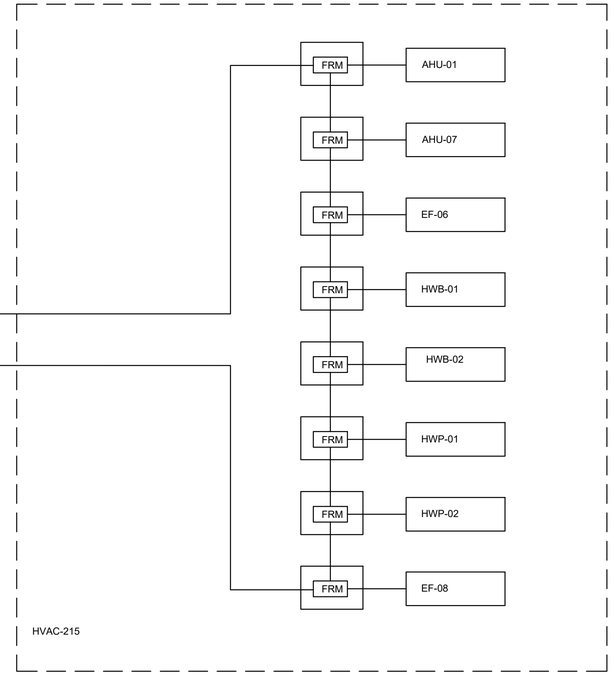

WARNING
IT IS A VIOLATION OF SECTION 7209.2 OF THE NEW YORK STATE EDUCATION LAW FOR ANY PERSON, UNLESS ACTING UNDER THE DIRECTION OF A LICENSED PROFESSIONAL ENGINEER, TO ALTER IN ANY WAY PLANS, SPECIFICATIONS, PLATS OR REPORTS TO WHICH THE SEAL OF A PROFESSIONAL ENGINEER HAS BEEN APPLIED. IF AN ITEM BEARING THE SEAL OF A PROFESSIONAL ENGINEER IS ALTERED, THE ALTERING ENGINEER SHALL AFFIX TO THE ITEM HIS SEAL AND THE NOTATION "ALTERED BY" FOLLOWED BY HIS SIGNATURE, THE DATE, AND A SPECIFIC DESCRIPTION OF THE ALTERATION.

REV	ISSUED FOR	DATE	BY

PROJECT ENGINEER: R. FROST
DESIGNED BY: Y. ABDALLA
DRAWN BY: P. NUGENT
CHECKED BY: G. MARKOU
IF THIS BAR DOES NOT MEASURE 1" THEN DRAWING IS NOT TO FULL SCALE 0 1/2" 1"

BID SET

STATE OF NEW YORK · GEORGE MARKOU · 072603 · LICENSED PROFESSIONAL ENGINEER

Hazen

HAZEN AND SAWYER
498 SEVENTH AVENUE, 11th FLOOR
NEW YORK, NEW YORK 10018

WESTCHESTER JOINT WATER WORKS
MAMARONECK, NY

RYE LAKE WATER FILTRATION PLANT
HARRISON, NY

ELECTRICAL
FIRE ALARM SYSTEM RISER DIAGRAM - SHEET 2

DATE: FEB 2025
HAZEN NO.: 90388-000
CONTRACT NO.: A1364-A
DRAWING NUMBER: E-023

File: C:\USERS\APENA\DCACCDOCS\HAZEN AND SAWYER\90388-000_RYE_LAKE_FILTRATION\PROJECT FILES\PROJECTWISE\ELECTRICAL\E-023 Saved by OKREMEN Save date: 2/18/2025 1:43 PM
PLOT DATE: 4/15/2025 3:44 PM BY: APENA

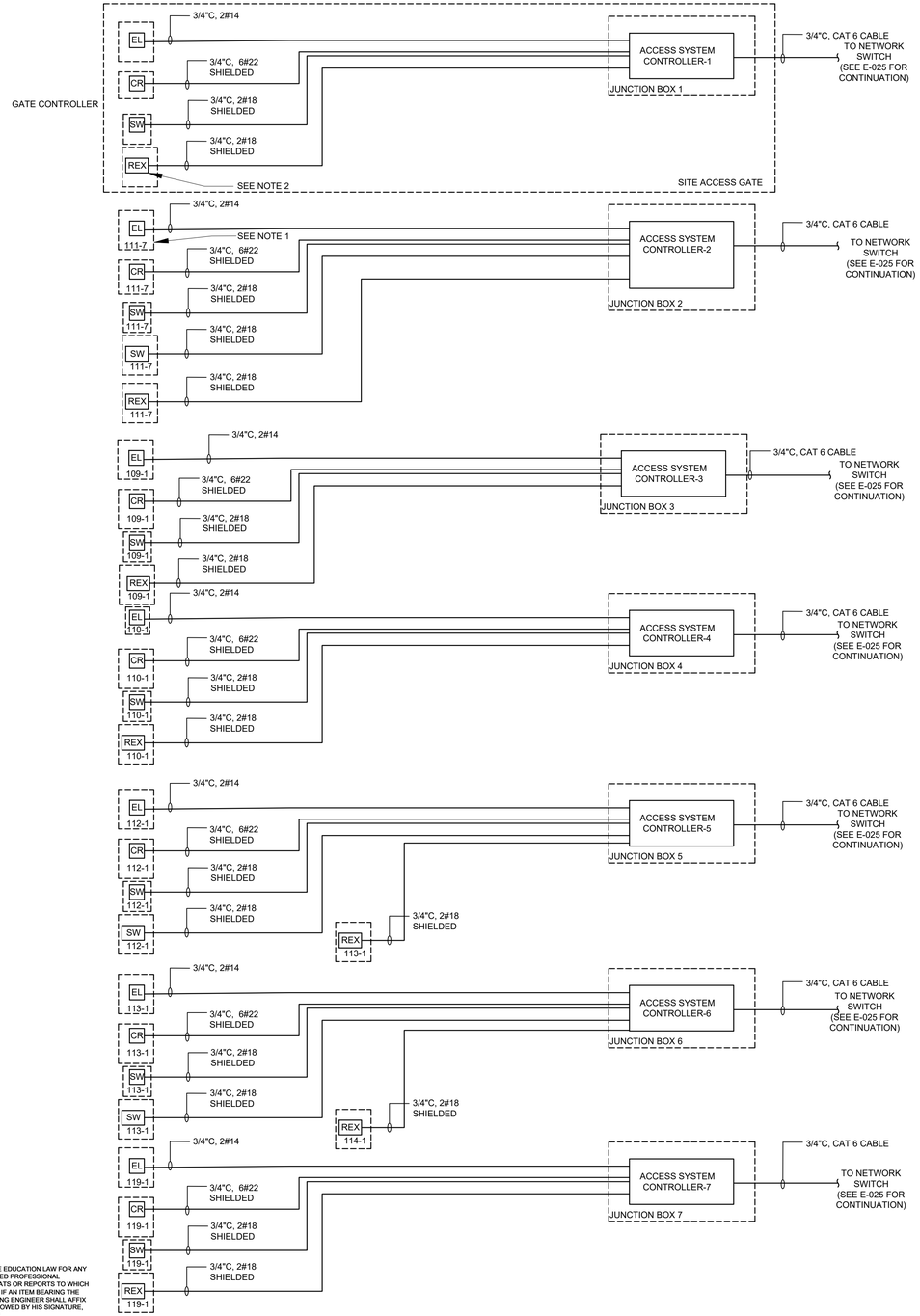

WARNING
IT IS A VIOLATION OF SECTION 7209.2 OF THE NEW YORK STATE EDUCATION LAW FOR ANY PERSON, UNLESS ACTING UNDER THE DIRECTION OF A LICENSED PROFESSIONAL ENGINEER, TO ALTER IN ANY WAY PLANS, SPECIFICATIONS, PLATS OR REPORTS TO WHICH THE SEAL OF A PROFESSIONAL ENGINEER HAS BEEN APPLIED. IF AN ITEM BEARING THE SEAL OF A PROFESSIONAL ENGINEER IS ALTERED, THE ALTERING ENGINEER SHALL AFFIX TO THE ITEM HIS SEAL AND THE NOTATION "ALTERED BY" FOLLOWED BY HIS SIGNATURE, THE DATE, AND A SPECIFIC DESCRIPTION OF THE ALTERATION.

NOTES:

1. SEE ARCHITECTURAL DRAWINGS A-007, A-008, AND A-009 FOR THE LOCATION OF THE DOORS REFERENCED ON THIS DRAWING.
2. THE REX SWITCH EMBEDDED IN THE DOOR SHALL SHUNT DOOR CONTACTS ALARM ON EXIT.

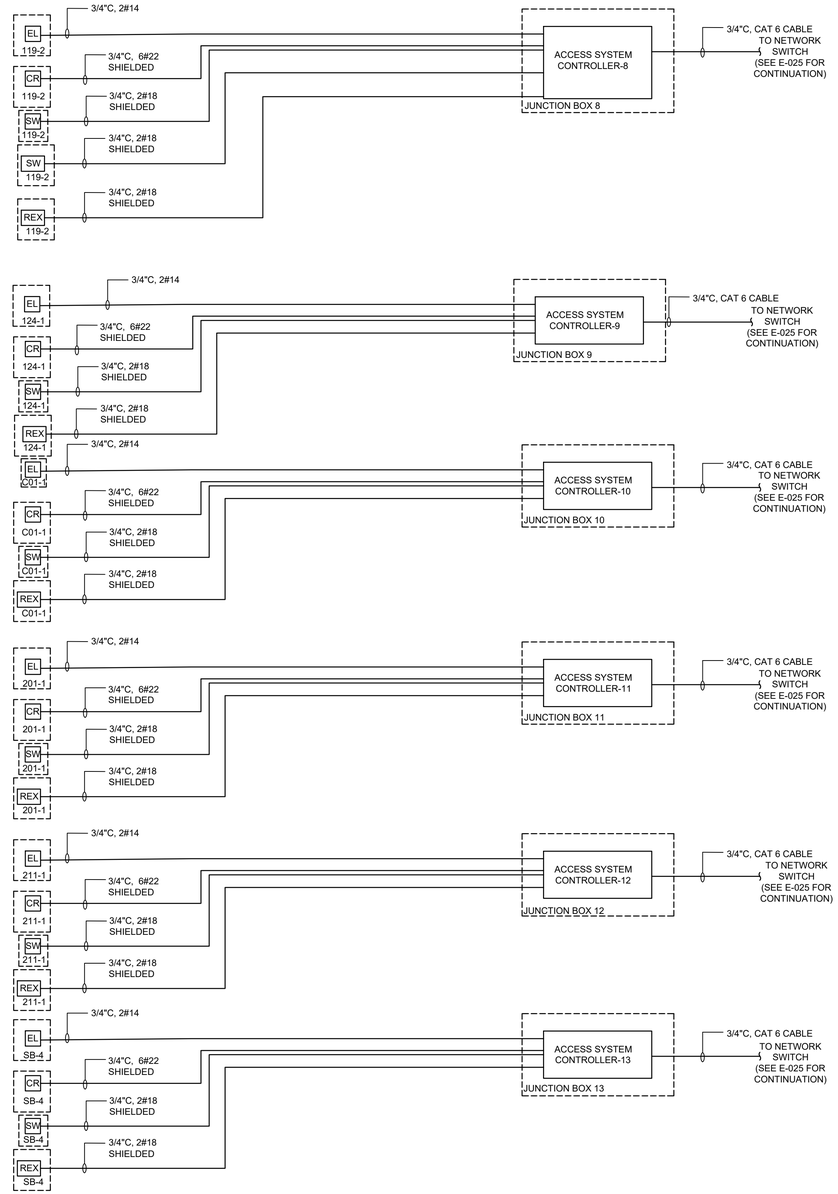

REV	ISSUED FOR	DATE	BY

PROJECT ENGINEER:	R. FROST
DESIGNED BY:	Y. ABDALLA
DRAWN BY:	P. NUGENT
CHECKED BY:	G. MARKOU
IF THIS BAR DOES NOT MEASURE 1" THEN DRAWING IS NOT TO FULL SCALE	0 1/2" 1"

BID SET

STATE OF NEW YORK · GEORGE MARKOU · 072603 · LICENSED PROFESSIONAL ENGINEER

Hazen
HAZEN AND SAWYER
498 SEVENTH AVENUE, 11th FLOOR
NEW YORK, NEW YORK 10018

WESTCHESTER JOINT WATER WORKS
MAMARONECK, NY

RYE LAKE WATER FILTRATION PLANT
HARRISON, NY

ELECTRICAL
SECURITY SYSTEM AND PAGING/COMMUNICATION NETWORK RISER DIAGRAM - SHEET 1

DATE:	FEB 2025
HAZEN NO.:	90388-000
CONTRACT NO.:	A1364-A
DRAWING NUMBER:	E-024

File: C:\USERS\APENA\DCACDOCS\HAZEN AND SAWYER\90388-000_RYE_LAKE_FILTRATION\PROJECT FILES\PROJECTWISE\ELECTRICAL\E-024 Saved by APENA Save date: 4/15/2025 9:22 AM
PLOT DATE: 4/15/2025 3:47 PM BY: APENA

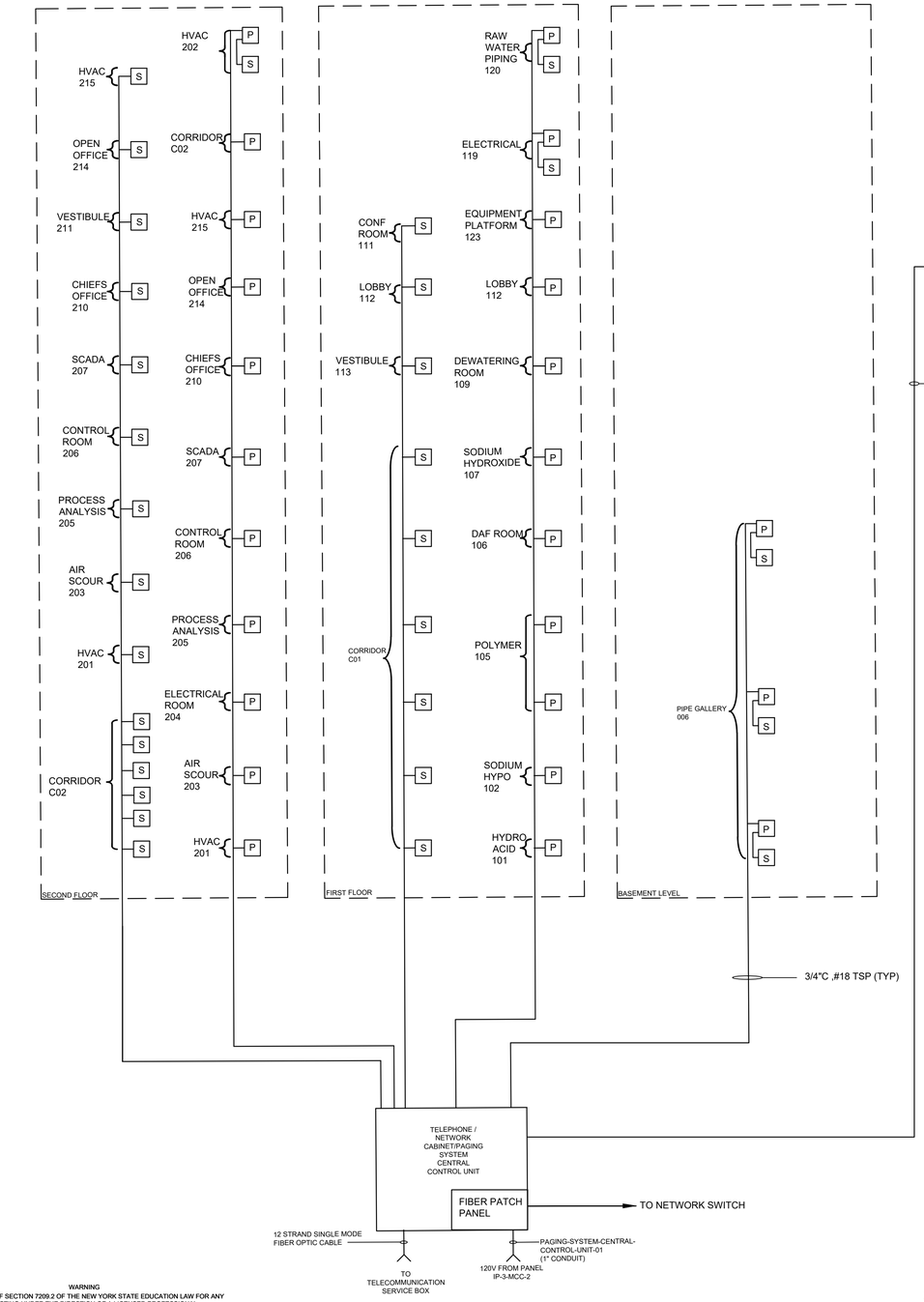

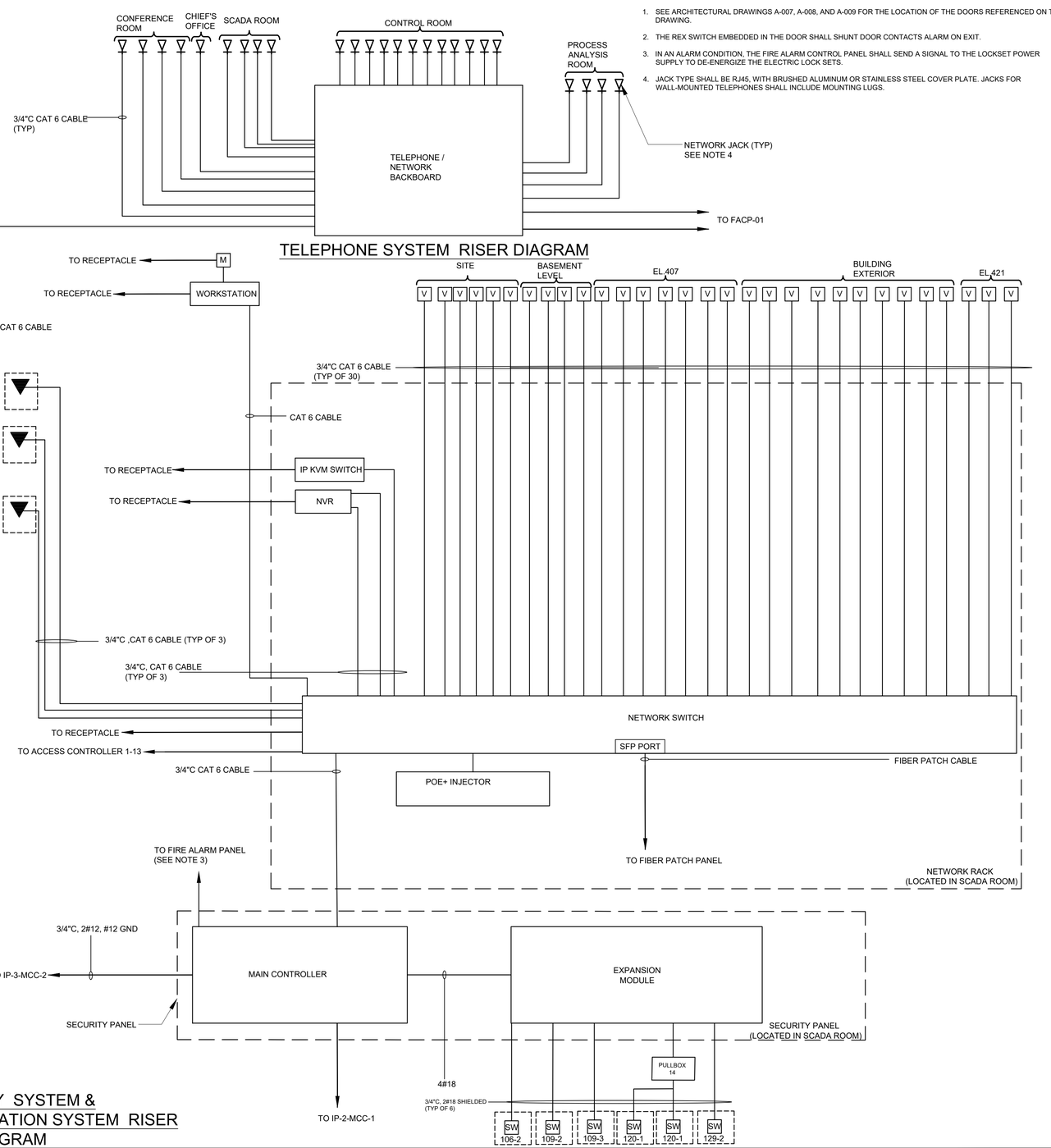

NOTES:

1. SEE ARCHITECTURAL DRAWINGS A-007, A-008, AND A-009 FOR THE LOCATION OF THE DOORS REFERENCED ON THIS DRAWING.
2. THE REX SWITCH EMBEDDED IN THE DOOR SHALL SHUNT DOOR CONTACTS ALARM ON EXIT.
3. IN AN ALARM CONDITION, THE FIRE ALARM CONTROL PANEL SHALL SEND A SIGNAL TO THE LOCKSET POWER SUPPLY TO DE-ENERGIZE THE ELECTRIC LOCK SETS.
4. JACK TYPE SHALL BE RJ45, WITH BRUSHED ALUMINUM OR STAINLESS STEEL COVER PLATE. JACKS FOR WALL-MOUNTED TELEPHONES SHALL INCLUDE MOUNTING LUGS.

WARNING
IT IS A VIOLATION OF SECTION 7209.2 OF THE NEW YORK STATE EDUCATION LAW FOR ANY PERSON, UNLESS ACTING UNDER THE DIRECTION OF A LICENSED PROFESSIONAL ENGINEER, TO ALTER IN ANY WAY PLANS, SPECIFICATIONS, PLATS OR REPORTS TO WHICH THE SEAL OF A PROFESSIONAL ENGINEER HAS BEEN AFFIXED. IF AN ITEM BEARING THE SEAL OF A PROFESSIONAL ENGINEER IS ALTERED, THE ALTERING ENGINEER SHALL AFFIX TO THE ITEM HIS SEAL AND THE NOTATION "ALTERED BY" FOLLOWED BY HIS SIGNATURE, THE DATE, AND A SPECIFIC DESCRIPTION OF THE ALTERATION.

SECURITY SYSTEM & PAGING/COMMUNICATION SYSTEM RISER DIAGRAM

REV	ISSUED FOR	DATE	BY

PROJECT ENGINEER:	R. FROST
DESIGNED BY:	Y. ABDALLA
DRAWN BY:	P. NUGENT
CHECKED BY:	G. MARKOU

IF THIS BAR DOES NOT MEASURE 1" THEN DRAWING IS NOT TO FULL SCALE (0, 1/2", 1")

BID SET

STATE OF NEW YORK — GEORGE MARKOU — 072603 — LICENSED PROFESSIONAL ENGINEER

Hazen

HAZEN AND SAWYER
498 SEVENTH AVENUE, 11th FLOOR
NEW YORK, NEW YORK 10018

WESTCHESTER JOINT WATER WORKS
MAMARONECK, NY

RYE LAKE WATER FILTRATION PLANT
HARRISON, NY

ELECTRICAL
SECURITY SYSTEM AND PAGING/COMMUNICATION NETWORK RISER DIAGRAM - SHEET 2

DATE:	FEB 2025
HAZEN NO.:	90388-000
CONTRACT NO.:	A1364-A
DRAWING NUMBER:	E-025

File: C:\USERS\APENA\DCACCDOCS\HAZEN AND SAWYER\90388-000_RYE_LAKE_FILTRATION\PROJECT FILES\PROJECTWISE\ELECTRICAL\E-025 Saved by OKREMEN Save date: 2/7/2025 4:07 PM
PLOT DATE: 4/15/2025 3:47 PM BY: APENA

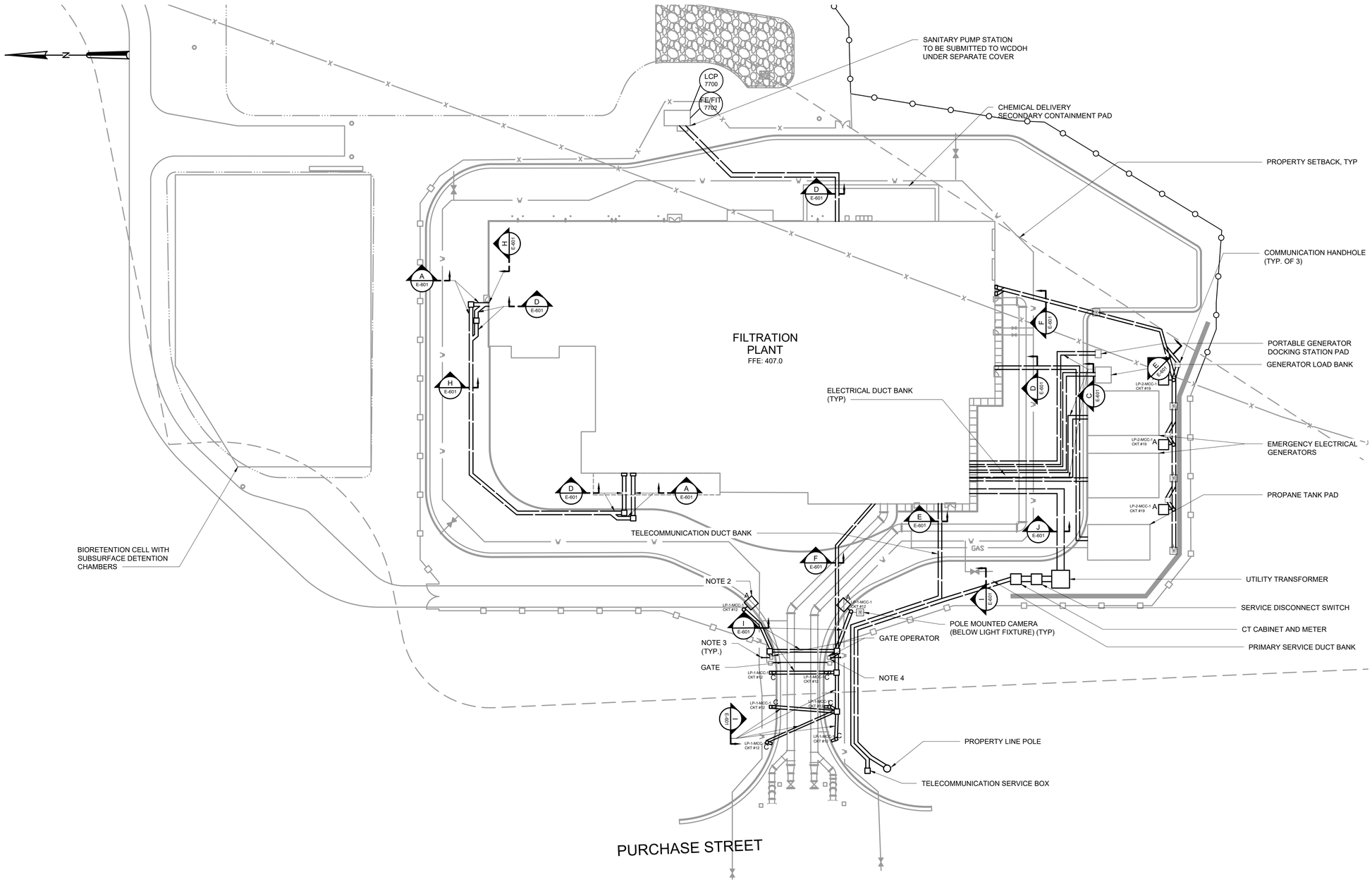

PLAN

SCALE: 1" = 30'

SCALE: 1" = 30'

30 15 0 30'

NOTES:

1. REFER TO THE SECURITY SYSTEM RISER DIAGRAM SHOWN ON E-024 AND E-025 FOR MORE DETAILS.
2. MOUNT FIXTURES TYPE A AND A2 10' AFF.
3. FURNISH AND INSTALL SOLID COPPER GROUND ROD 5/8" DIAMETER AND 10' LONG. BOND GROUND ROD TO THE CHASSIS BASE THROUGH THE CONCRETE BASE WITH A SINGLE, UN-SPLICED #6 AWG COPPER WIRE THEN 3' LONG.
4. A THREE-WIRE SHIELDED CONDUCTOR CABLE IS REQUIRED TO CONNECT TWO OPERATORS TOGETHER FOR DUAL OPERATION. USE BELDEN 8760 TWISTED PAIR SHIELDED CABLE (OR EQUIVALENT) ONLY.

WARNING
IT IS A VIOLATION OF SECTION 7209.2 OF THE NEW YORK STATE EDUCATION LAW FOR ANY PERSON, UNLESS ACTING UNDER THE DIRECTION OF A LICENSED PROFESSIONAL ENGINEER, TO ALTER IN ANY WAY PLANS, SPECIFICATIONS, PLATS OR REPORTS TO WHICH THE SEAL OF A PROFESSIONAL ENGINEER HAS BEEN APPLIED. IF AN ITEM BEARING THE SEAL OF A PROFESSIONAL ENGINEER IS ALTERED, THE ALTERING ENGINEER SHALL AFFIX TO THE ITEM HIS SEAL AND THE NOTATION "ALTERED BY" FOLLOWED BY HIS SIGNATURE, THE DATE, AND A SPECIFIC DESCRIPTION OF THE ALTERATION.

REV	ISSUED FOR	DATE	BY

PROJECT ENGINEER:	R. FROST
DESIGNED BY:	Y. ABDALLA
DRAWN BY:	Y. ABDALLA
CHECKED BY:	G. MARKOU

IF THIS BAR DOES NOT MEASURE 1" THEN DRAWING IS NOT TO FULL SCALE 0 1/2" 1"

BID SET

STATE OF NEW YORK GEORGE MARKOU 072603 LICENSED PROFESSIONAL ENGINEER

Hazen
HAZEN AND SAWYER
498 SEVENTH AVENUE, 11th FLOOR
NEW YORK, NEW YORK 10018

WESTCHESTER JOINT WATER WORKS
MAMARONECK, NY

RYE LAKE WATER FILTRATION PLANT
HARRISON, NY

ELECTRICAL
SITE PLAN

DATE:	FEB 2025
HAZEN NO.:	90388-000
CONTRACT NO.:	A1364-A
DRAWING NUMBER:	E-100

File: C:\USERS\APENA\DOCUMENTS\ACCDOCS\HAZEN AND SAWYER\90388-000_RYE_LAKE_FILTRATION\PROJECT FILES\PROJECTWISE\ELECTRICAL\E-100 Saved by OKREMEN Save date: 2/18/2025 1:45 PM
PLOT DATE: 4/15/2025 3:47 PM BY: APENA

NOTES:

1. CONDUITS UNDER 2" ARE NOT SHOWN ON THIS DRAWING.
2. REFER TO DRAWINGS E-012 TO E-017 FOR PANELBOARD SCHEDULES.
3. CONDUIT SHALL BE SUPPORTED FROM THE CEILING OR WALLS OF THE ROOMS/AREAS THEY ARE LOCATED IN. SUPPORT SYSTEM SHALL BE DESIGNED BY THE CONTRACTOR AS PER SPECIFICATION SECTION 26 05 29.
4. ALL "J" LIGHT FIXTURES SHALL BE MOUNTED 8'-6" AFF.

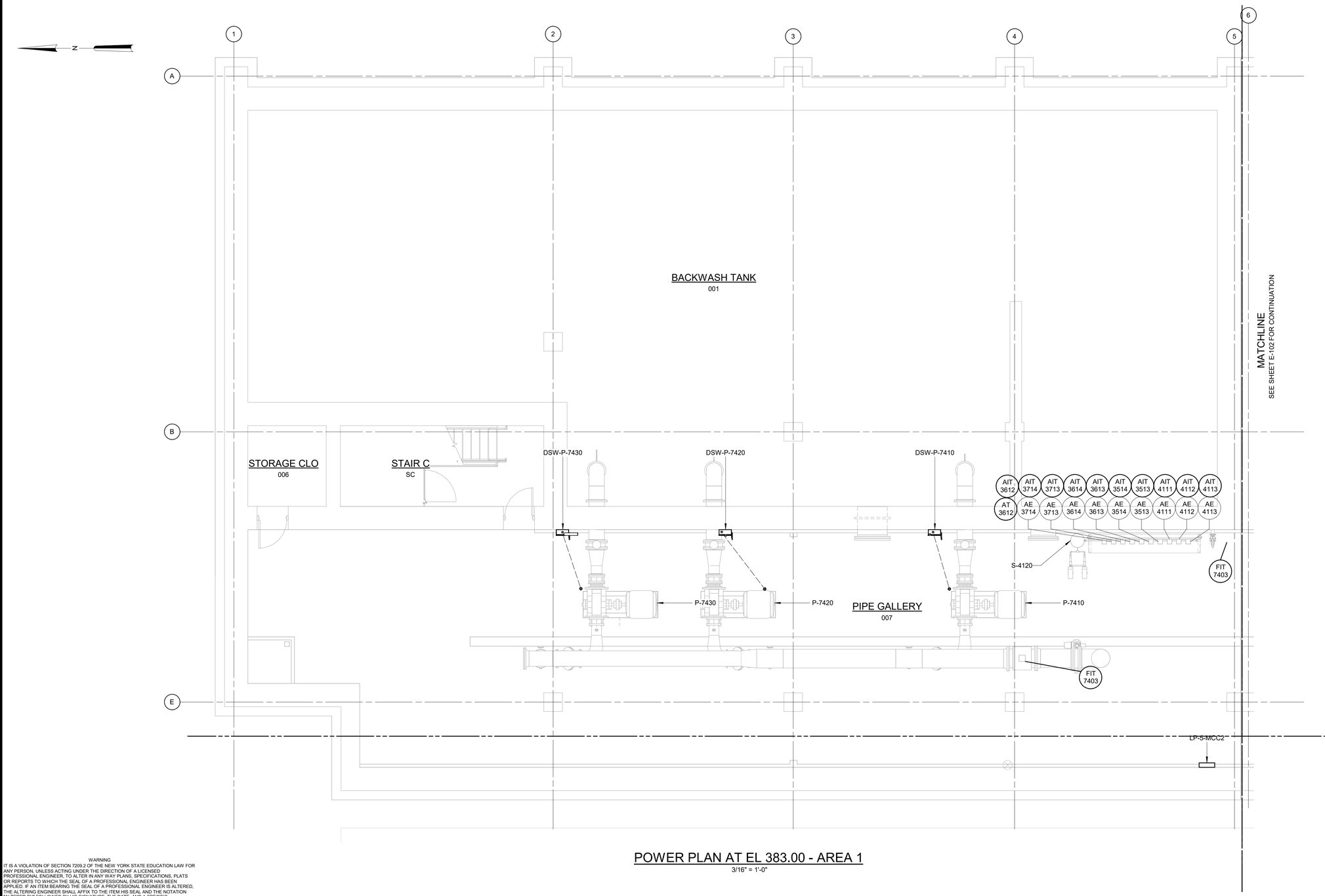

POWER PLAN AT EL 383.00 - AREA 1

3/16" = 1'-0"

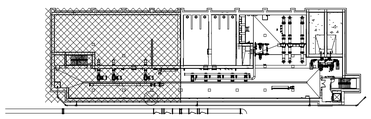

3/16" = 1'-0"

WARNING
IT IS A VIOLATION OF SECTION 7209.2 OF THE NEW YORK STATE EDUCATION LAW FOR ANY PERSON, UNLESS ACTING UNDER THE DIRECTION OF A LICENSED PROFESSIONAL ENGINEER, TO ALTER IN ANY WAY PLANS, SPECIFICATIONS, PLATS OR REPORTS TO WHICH THE SEAL OF A PROFESSIONAL ENGINEER HAS BEEN APPLIED. IF AN ITEM BEARING THE SEAL OF A PROFESSIONAL ENGINEER IS ALTERED, THE ALTERING ENGINEER SHALL AFFIX TO THE ITEM HIS SEAL AND THE NOTATION "ALTERED BY" FOLLOWED BY HIS SIGNATURE, THE DATE, AND A SPECIFIC DESCRIPTION OF THE ALTERATION.

REV	ISSUED FOR	DATE	BY

PROJECT ENGINEER:	R. FROST
DESIGNED BY:	Y. ABDALLA
DRAWN BY:	R. CHUNG
CHECKED BY:	G. MARKOU
IF THIS BAR DOES NOT MEASURE 1" THEN DRAWING IS NOT TO FULL SCALE	0 1/2" 1"

BID SET

STATE OF NEW YORK · GEORGE MARKOU · 072603 · LICENSED PROFESSIONAL ENGINEER

Hazen
HAZEN AND SAWYER
498 SEVENTH AVENUE, 11th FLOOR
NEW YORK, NEW YORK 10018

WESTCHESTER JOINT WATER WORKS
MAMARONECK, NY

RYE LAKE WATER FILTRATION PLANT
HARRISON, NY

FILTRATION PLANT
ELECTRICAL
POWER PLAN - EL 383.00 - AREA 1

DATE:	FEB 2025
HAZEN NO.:	90388-000
CONTRACT NO.:	A1364-A
DRAWING NUMBER:	E-101

Autodesk Docs://90388-000_Rye_Lake_Filtration/90388-000-WFP-E.rvt
4/15/2025 3:05:18 PM

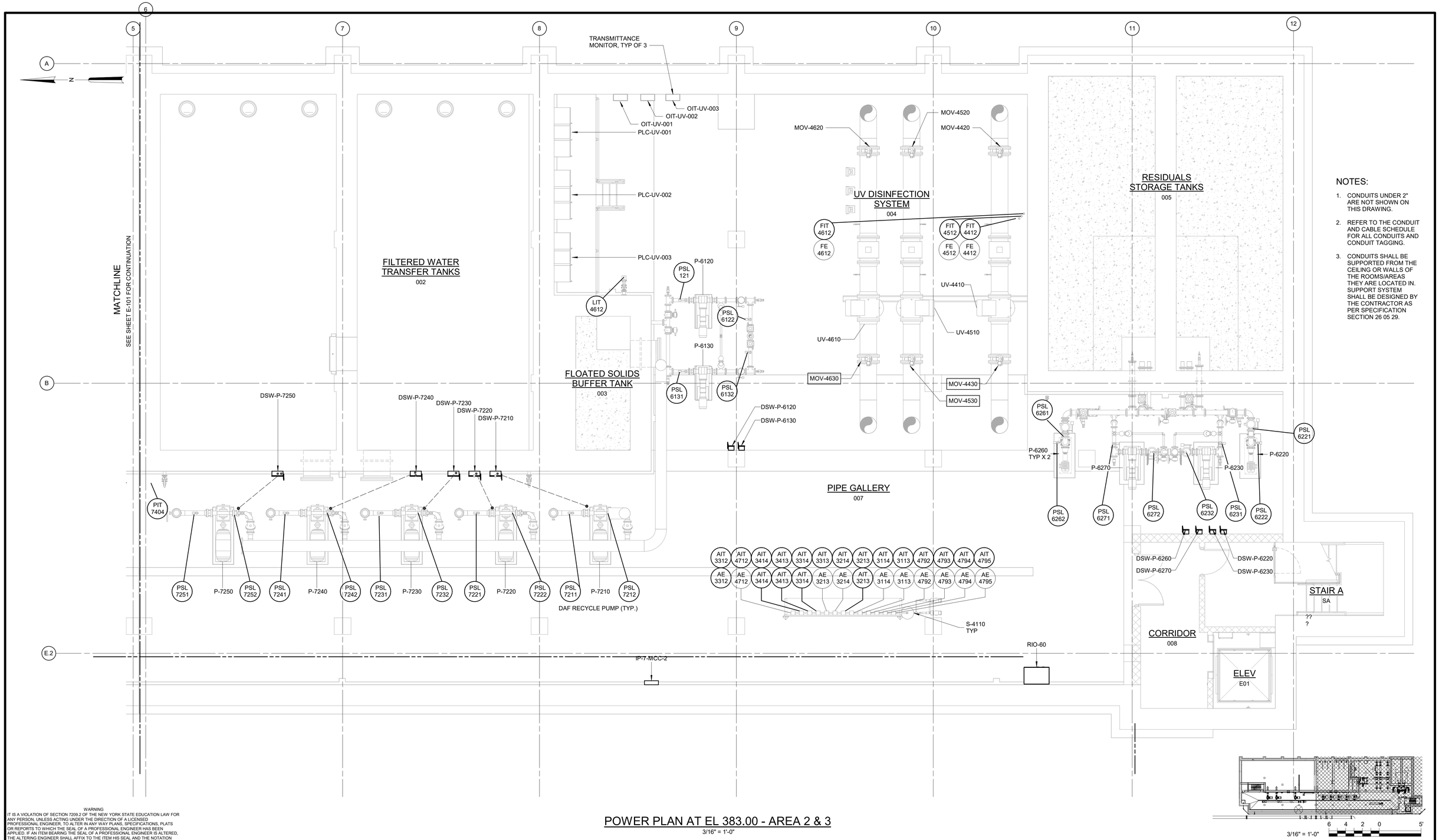

NOTES:

1. CONDUITS UNDER 2" ARE NOT SHOWN ON THIS DRAWING.
2. REFER TO THE CONDUIT AND CABLE SCHEDULE FOR ALL CONDUITS AND CONDUIT TAGGING.
3. CONDUITS SHALL BE SUPPORTED FROM THE CEILING OR WALLS OF THE ROOMS/AREAS THEY ARE LOCATED IN. SUPPORT SYSTEM SHALL BE DESIGNED BY THE CONTRACTOR AS PER SPECIFICATION SECTION 26 05 29.

POWER PLAN AT EL 383.00 - AREA 2 & 3

3/16" = 1'-0"

WARNING
IT IS A VIOLATION OF SECTION 7209.2 OF THE NEW YORK STATE EDUCATION LAW FOR ANY PERSON, UNLESS ACTING UNDER THE DIRECTION OF A LICENSED PROFESSIONAL ENGINEER, TO ALTER IN ANY WAY PLANS, SPECIFICATIONS, PLATS OR REPORTS TO WHICH THE SEAL OF A PROFESSIONAL ENGINEER HAS BEEN APPLIED. IF AN ITEM BEARING THE SEAL OF A PROFESSIONAL ENGINEER IS ALTERED, THE ALTERING ENGINEER SHALL AFFIX TO THE ITEM HIS SEAL AND THE NOTATION "ALTERED BY" FOLLOWED BY HIS SIGNATURE, THE DATE, AND A SPECIFIC DESCRIPTION OF THE ALTERATION.

REV	ISSUED FOR	DATE	BY

PROJECT ENGINEER:	R. FROST
DESIGNED BY:	Y. ABDALLA
DRAWN BY:	R. CHUNG
CHECKED BY:	G. MARKOU

IF THIS BAR DOES NOT MEASURE 1" THEN DRAWING IS NOT TO FULL SCALE — 0 1/2" 1"

BID SET



Hazen

HAZEN AND SAWYER
498 SEVENTH AVENUE, 11th FLOOR
NEW YORK, NEW YORK 10018

WESTCHESTER JOINT WATER WORKS
MAMARONECK, NY

RYE LAKE WATER FILTRATION PLANT
HARRISON, NY

FILTRATION PLANT
ELECTRICAL
POWER PLAN - EL 383.00 - AREA 2 & 3

DATE:	FEB 2025
HAZEN NO.:	90388-000
CONTRACT NO.:	A1364-A
DRAWING NUMBER:	E-102

Autodesk Docs://90388-000_Rye_Lake_Filtration/90388-000-WFP-E.rvt
4/15/2025 3:05:21 PM

NOTES:

1. CONDUITS UNDER 2" ARE NOT SHOWN ON THIS DRAWING.
2. REFER TO DRAWINGS E-012 TO E-017 FOR PANELBOARD SCHEDULES.
3. CONDUIT SHALL BE SUPPORTED FROM THE CEILING OR WALLS OF THE ROOMS/AREAS THEY ARE LOCATED IN. SUPPORT SYSTEM SHALL BE DESIGNED BY THE CONTRACTOR AS PER SPECIFICATION SECTION 26 05 29.
4. ALL "J" LIGHT FIXTURES SHALL BE MOUNTED 8'-6" AFF.

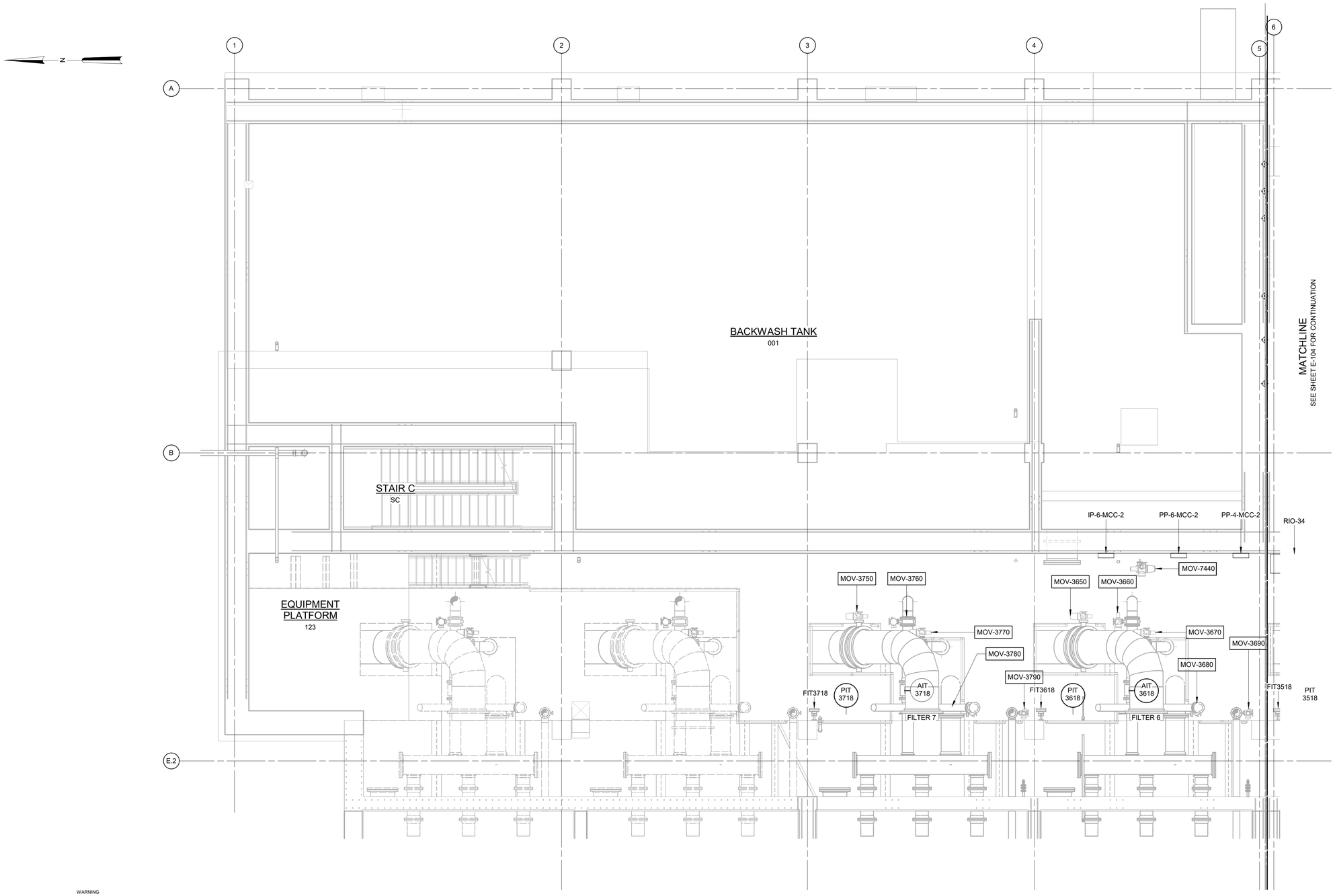

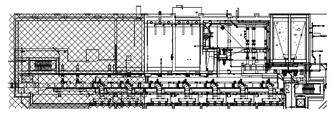

3/16" = 1'-0"

6 4 2 0 5'

POWER PLAN AT EL 398.00 - AREA 1

3/16" = 1'-0"

WARNING
IT IS A VIOLATION OF SECTION 7209.2 OF THE NEW YORK STATE EDUCATION LAW FOR ANY PERSON, UNLESS ACTING UNDER THE DIRECTION OF A LICENSED PROFESSIONAL ENGINEER, TO ALTER IN ANY WAY PLANS, SPECIFICATIONS, PLATS OR REPORTS TO WHICH THE SEAL OF A PROFESSIONAL ENGINEER HAS BEEN APPLIED. IF AN ITEM BEARING THE SEAL OF A PROFESSIONAL ENGINEER IS ALTERED, THE ALTERING ENGINEER SHALL AFFIX TO THE ITEM HIS SEAL AND THE NOTATION "ALTERED BY" FOLLOWED BY HIS SIGNATURE, THE DATE, AND A SPECIFIC DESCRIPTION OF THE ALTERATION.

REV	ISSUED FOR	DATE	BY

PROJECT ENGINEER:	R. FROST
DESIGNED BY:	Y. ABDALLA
DRAWN BY:	R. CHUNG
CHECKED BY:	G. MARKOU

IF THIS BAR DOES NOT MEASURE 1" THEN DRAWING IS NOT TO FULL SCALE 0 1/2" 1"

BID SET

STATE OF NEW YORK · GEORGE MARKOU · 072603 · LICENSED PROFESSIONAL ENGINEER

Hazen

HAZEN AND SAWYER
498 SEVENTH AVENUE, 11th FLOOR
NEW YORK, NEW YORK 10018

WESTCHESTER JOINT WATER WORKS
MAMARONECK, NY

RYE LAKE WATER FILTRATION PLANT
HARRISON, NY

FILTRATION PLANT
ELECTRICAL
POWER PLAN - EL 398.00 - AREA 1

DATE:	FEB 2025
HAZEN NO.:	90388-000
CONTRACT NO.:	A1364-A
DRAWING NUMBER:	E-103

Autodesk Docs://90388-000_Rye_Lake_Filtration/90388-000-WFP-E.rvt
4/15/2025 3:05:26 PM

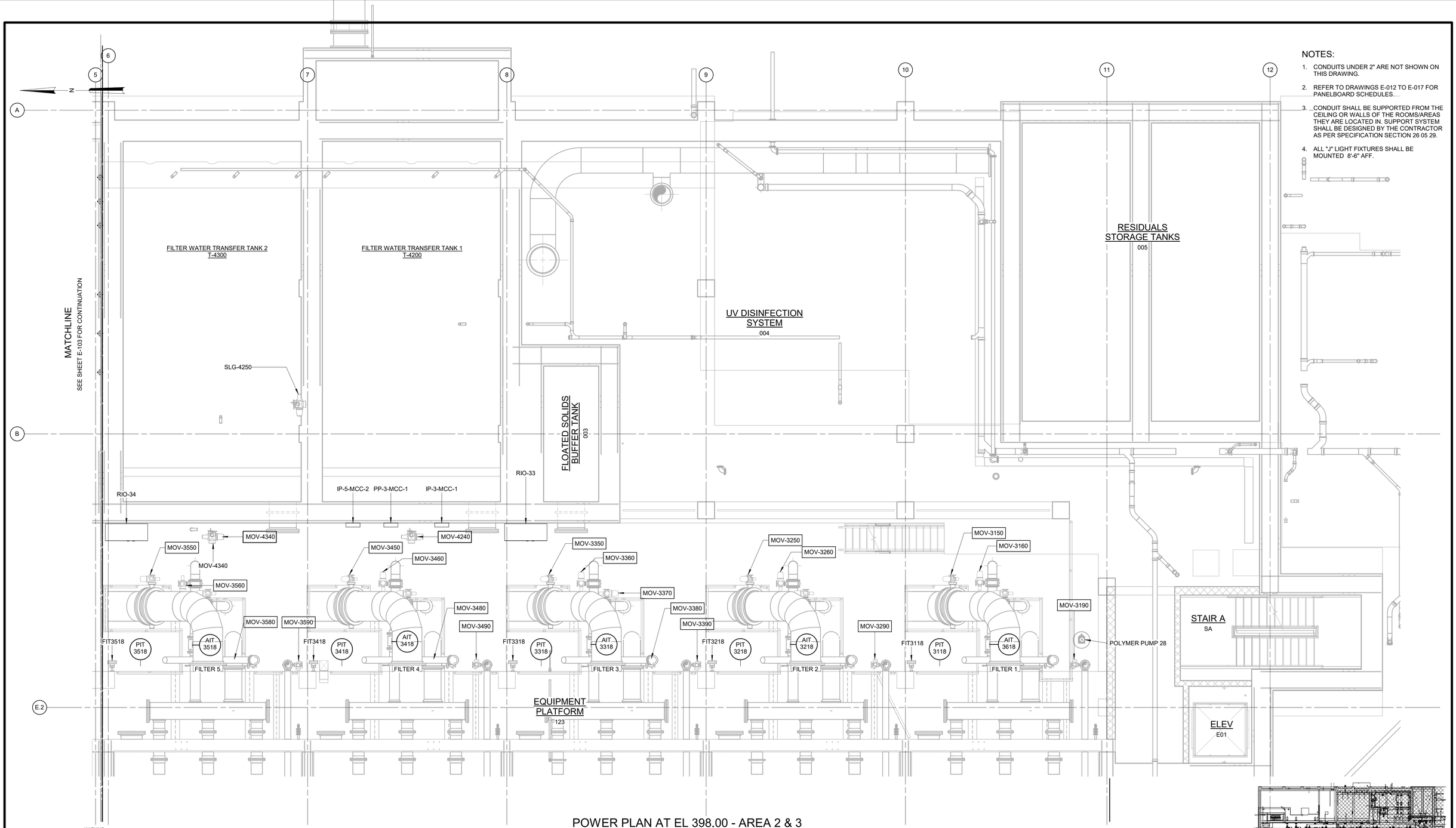

NOTES:

1. CONDUITS UNDER 2" ARE NOT SHOWN ON THIS DRAWING.
2. REFER TO DRAWINGS E-012 TO E-017 FOR PANELBOARD SCHEDULES.
3. CONDUIT SHALL BE SUPPORTED FROM THE CEILING OR WALLS OF THE ROOMS/AREAS THEY ARE LOCATED IN. SUPPORT SYSTEM SHALL BE DESIGNED BY THE CONTRACTOR AS PER SPECIFICATION SECTION 26 05 29.
4. ALL "J" LIGHT FIXTURES SHALL BE MOUNTED 8'-6" AFF.

POWER PLAN AT EL 398.00 - AREA 2 & 3

3/16" = 1'-0"

3/16" = 1'-0"

WARNING
IT IS A VIOLATION OF SECTION 7209.2 OF THE NEW YORK STATE EDUCATION LAW FOR ANY PERSON, UNLESS ACTING UNDER THE DIRECTION OF A LICENSED PROFESSIONAL ENGINEER, TO ALTER IN ANY WAY PLANS, SPECIFICATIONS, PLATS OR REPORTS TO WHICH THE SEAL OF A PROFESSIONAL ENGINEER HAS BEEN APPLIED. IF AN ITEM BEARING THE SEAL OF A PROFESSIONAL ENGINEER IS ALTERED, THE ALTERING ENGINEER SHALL AFFIX TO THE ITEM HIS SEAL AND THE NOTATION "ALTERED BY" FOLLOWED BY HIS SIGNATURE, THE DATE, AND A SPECIFIC DESCRIPTION OF THE ALTERATION.

REV	ISSUED FOR	DATE	BY

PROJECT ENGINEER:	R. FROST
DESIGNED BY:	Y. ABDALLA
DRAWN BY:	R. CHUNG
CHECKED BY:	G. MARKOU

IF THIS BAR DOES NOT MEASURE 1" THEN DRAWING IS NOT TO FULL SCALE 0 1/2" 1"

BID SET

STATE OF NEW YORK · GEORGE MARKOU · 072603 · LICENSED PROFESSIONAL ENGINEER

Hazen

HAZEN AND SAWYER
498 SEVENTH AVENUE, 11th FLOOR
NEW YORK, NEW YORK 10018

WESTCHESTER JOINT WATER WORKS
MAMARONECK, NY

RYE LAKE WATER FILTRATION PLANT
HARRISON, NY

FILTRATION PLANT
ELECTRICAL
POWER PLAN - EL 398.00 - AREA 2 & 3

DATE:	FEB 2025
HAZEN NO.:	90388-000
CONTRACT NO.:	A1364-A
DRAWING NUMBER:	E-104

Autodesk Docs://90388-000_Rye_Lake_Filtration/90388-000-WFP-E.rvt
4/15/2025 3:05:29 PM

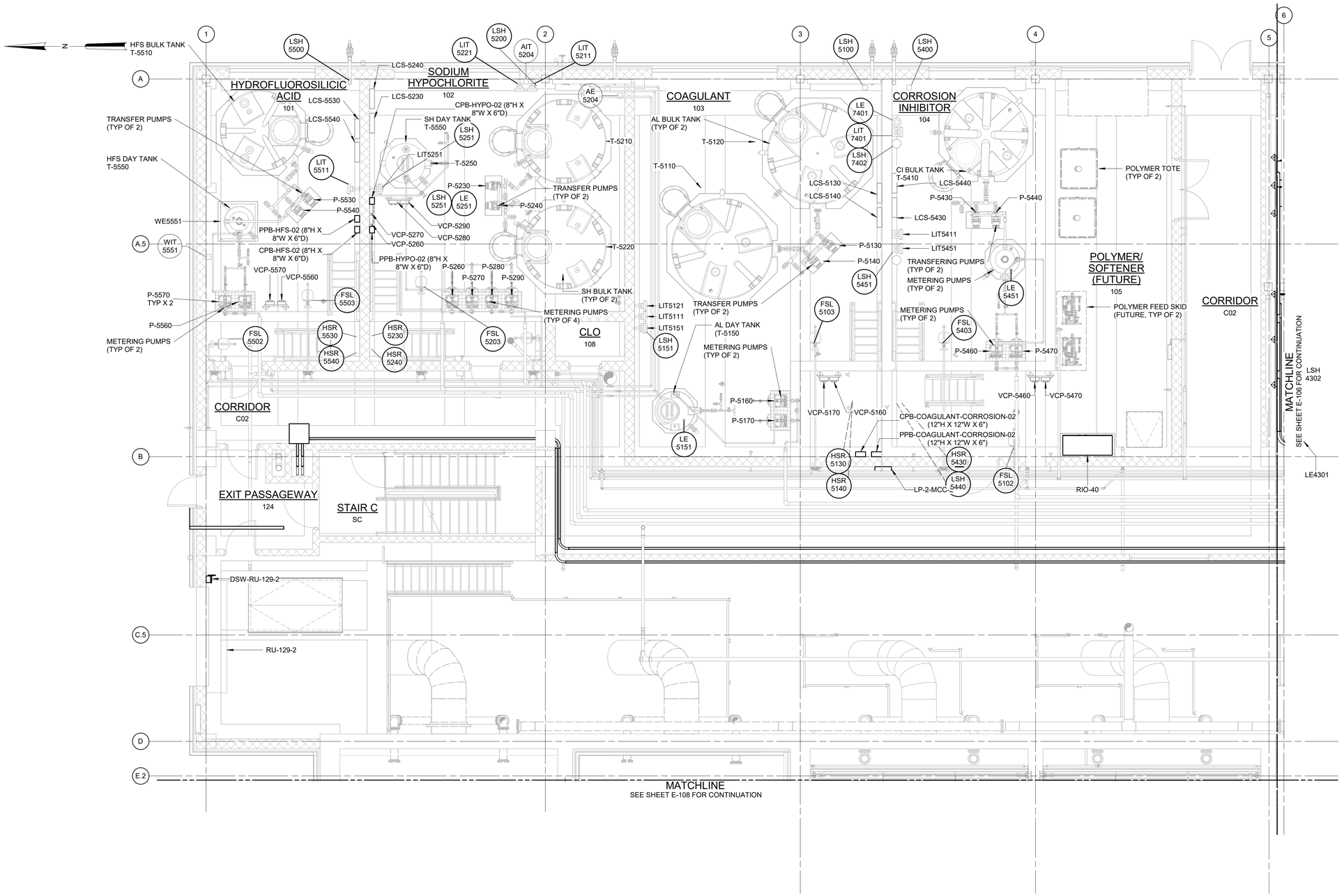

NOTES:

1. CONDUITS UNDER 2" ARE NOT SHOWN ON THIS DRAWING.
2. REFER TO THE CONDUIT AND CABLE SCHEDULE FOR ALL CONDUITS AND CONDUIT TAGGING.
3. CONDUITS SHALL BE SUPPORTED FROM THE CEILING OR WALLS OF THE ROOMS/AREAS THEY ARE LOCATED IN. SUPPORT SYSTEM SHALL BE DESIGNED BY THE CONTRACTOR AS PER SPECIFICATION SECTION 26 05 29.

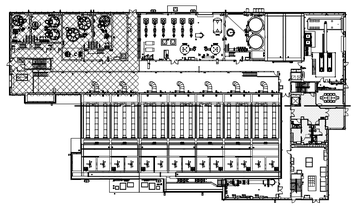

POWER PLAN AT EL 407.00 - AREA 1

3/16" = 1'-0"

WARNING
IT IS A VIOLATION OF SECTION 7209.2 OF THE NEW YORK STATE EDUCATION LAW FOR ANY PERSON, UNLESS ACTING UNDER THE DIRECTION OF A LICENSED PROFESSIONAL ENGINEER, TO ALTER IN ANY WAY PLANS, SPECIFICATIONS, PLATS OR REPORTS TO WHICH THE SEAL OF A PROFESSIONAL ENGINEER HAS BEEN APPLIED. IF AN ITEM BEARING THE SEAL OF A PROFESSIONAL ENGINEER IS ALTERED, THE ALTERING ENGINEER SHALL AFFIX TO THE ITEM HIS SEAL AND THE NOTATION "ALTERED BY" FOLLOWED BY HIS SIGNATURE, THE DATE, AND A SPECIFIC DESCRIPTION OF THE ALTERATION.

REV	ISSUED FOR	DATE	BY

PROJECT ENGINEER:	R. FROST
DESIGNED BY:	Y. ABDALLA
DRAWN BY:	R. CHUNG
CHECKED BY:	G. MARKOU

IF THIS BAR DOES NOT MEASURE 1" THEN DRAWING IS NOT TO FULL SCALE 0 1/2" 1"

BID SET

STATE OF NEW YORK GEORGE MARKOU 022603 LICENSED PROFESSIONAL ENGINEER

Hazen
HAZEN AND SAWYER
498 SEVENTH AVENUE, 11th FLOOR
NEW YORK, NEW YORK 10018

WESTCHESTER JOINT WATER WORKS
MAMARONECK, NY

RYE LAKE WATER FILTRATION PLANT
HARRISON, NY

FILTRATION PLANT
ELECTRICAL
POWER PLAN - EL 407.00 - AREA 1

DATE:	FEB 2025
HAZEN NO.:	90388-000
CONTRACT NO.:	A1364-A
DRAWING NUMBER:	E-105

Autodesk Docs://90388-000_Rye_Lake_Filtration/90388-000-WFP-E.rvt
4/15/2025 3:05:38 PM

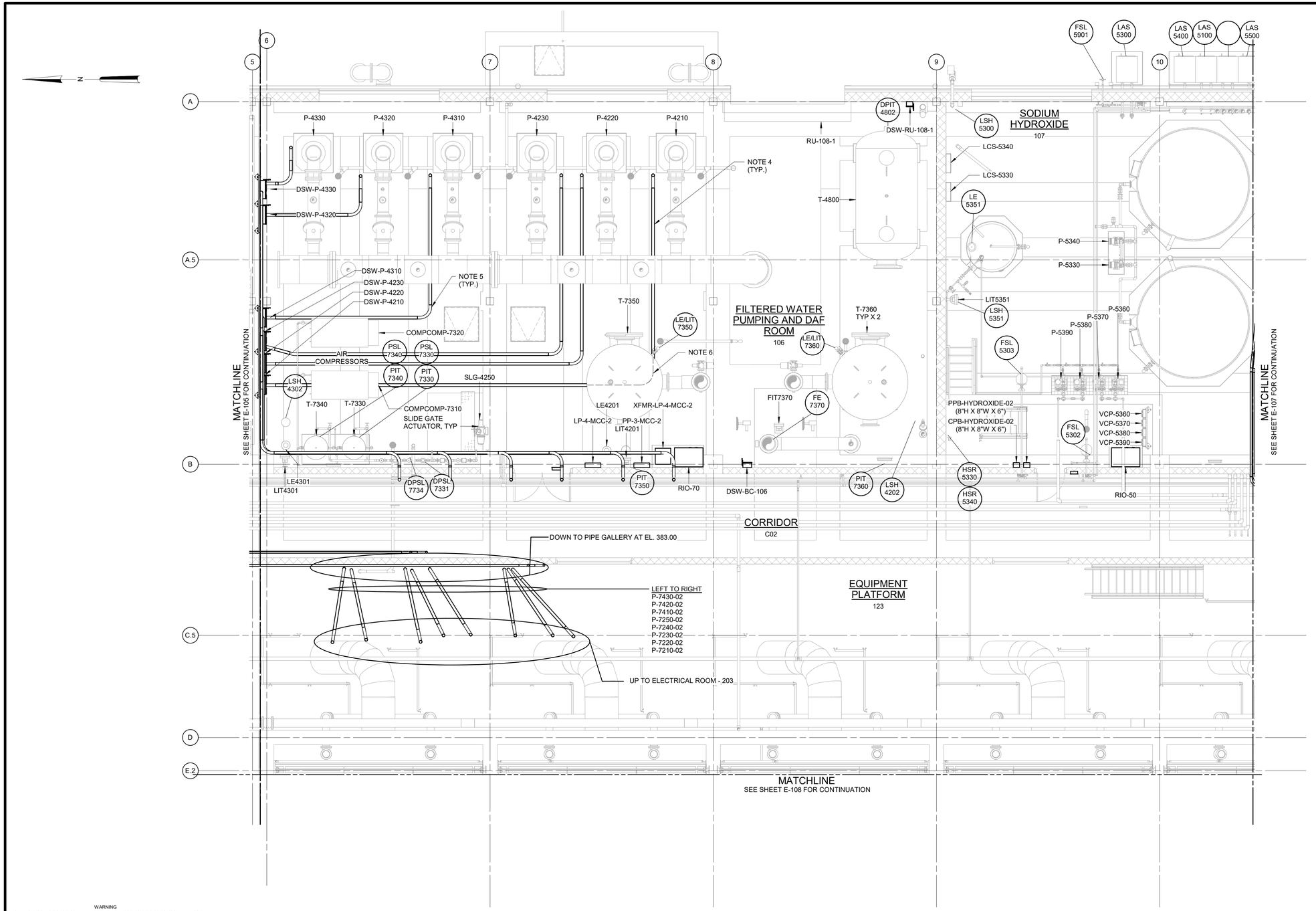

NOTES:

1. CONDUITS UNDER 2" ARE NOT SHOWN ON THIS DRAWING.
2. REFER TO THE CONDUIT AND CABLE SCHEDULE FOR ALL CONDUITS AND CONDUIT TAGGING.
3. CONDUITS SHALL BE SUPPORTED FROM THE CEILING OR WALLS OF THE ROOMS/AREAS THEY ARE LOCATED IN. SUPPORT SYSTEM SHALL BE DESIGNED BY THE CONTRACTOR AS PER SPECIFICATION SECTION 26 05 29.
4. POWER SUPPLY CONDUITS FOR PUMPS P-4210, P-4220, P-4230, P-4310, P-4320, AND P-4330 TO BE EMBEDDED IN THE CONCRETE SLAB. CONDUITS SHALL BE ROUTED SUCH THAT NO CONDUITS PENETRATE THROUGH CONCRETE BEAMS OR COLUMN REINFORCING.
5. CONDUIT BEND RADII SHALL BE NO LESS THAN THE SPECIFIED DISTANCE IN SECTION 26 05 33.
6. CONDUIT EMBEDDED IN THE CONCRETE SLAB UNDER TANK T-7350

POWER PLAN AT EL 407.00 - AREA 2

3/16" = 1'-0"

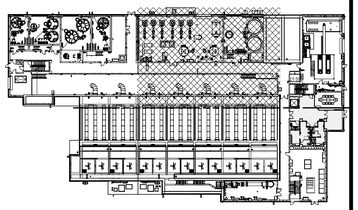

6 4 2 0 5'

3/16" = 1'-0"

WARNING
IT IS A VIOLATION OF SECTION 7209.2 OF THE NEW YORK STATE EDUCATION LAW FOR ANY PERSON, UNLESS ACTING UNDER THE DIRECTION OF A LICENSED PROFESSIONAL ENGINEER, TO ALTER IN ANY WAY PLANS, SPECIFICATIONS, PLATS OR REPORTS TO WHICH THE SEAL OF A PROFESSIONAL ENGINEER HAS BEEN APPLIED. IF AN ITEM BEARING THE SEAL OF A PROFESSIONAL ENGINEER IS ALTERED, THE ALTERING ENGINEER SHALL AFFIX TO THE ITEM HIS SEAL AND THE NOTATION "ALTERED BY" FOLLOWED BY HIS SIGNATURE, THE DATE, AND A SPECIFIC DESCRIPTION OF THE ALTERATION.

REV	ISSUED FOR	DATE	BY

PROJECT ENGINEER:	R. FROST
DESIGNED BY:	Y. ABDALLA
DRAWN BY:	R. CHUNG
CHECKED BY:	G. MARKOU
IF THIS BAR DOES NOT MEASURE 1" THEN DRAWING IS NOT TO FULL SCALE	0 1/2" 1"

BID SET

STATE OF NEW YORK · GEORGE MARKOU · 072603 · LICENSED PROFESSIONAL ENGINEER

Hazen
HAZEN AND SAWYER
498 SEVENTH AVENUE, 11th FLOOR
NEW YORK, NEW YORK 10018

WESTCHESTER JOINT WATER WORKS
MAMARONECK, NY

RYE LAKE WATER FILTRATION PLANT
HARRISON, NY

FILTRATION PLANT
ELECTRICAL
POWER PLAN - EL 407.00 - AREA 2

DATE:	FEB 2025
HAZEN NO.:	90388-000
CONTRACT NO.:	A1364-A
DRAWING NUMBER:	E-106

Autodesk Docs://90388-000_Rye_Lake_Filtration/90388-000-WFP-E.rvt
4/15/2025 3:05:45 PM

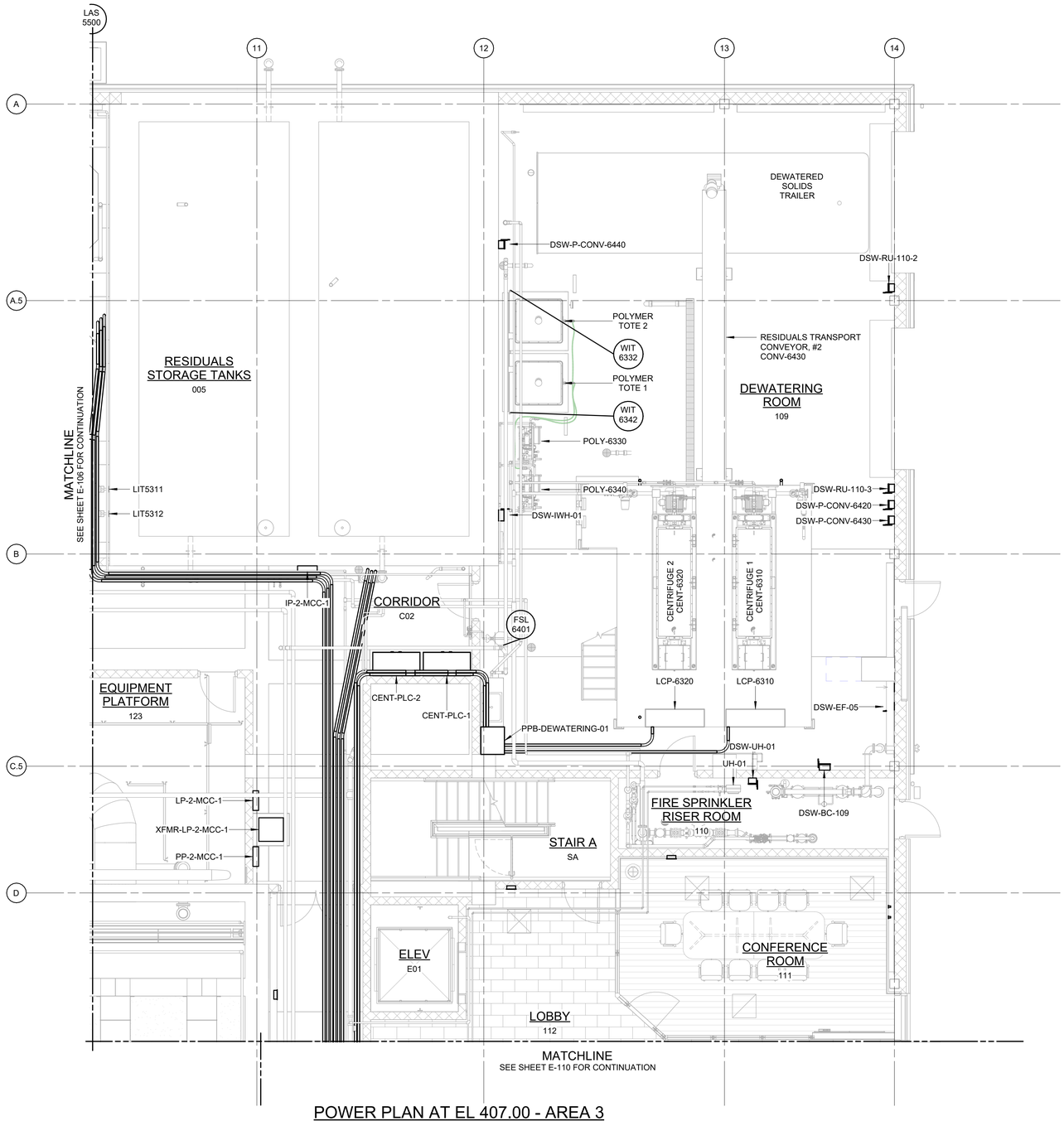

POWER PLAN AT EL 407.00 - AREA 3

3/16" = 1'-0"

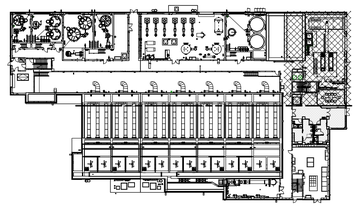

6 4 2 0 5'

3/16" = 1'-0"

NOTES:

1. CONDUITS UNDER 2" ARE NOT SHOWN ON THIS DRAWING.
2. REFER TO THE CONDUIT AND CABLE SCHEDULE FOR ALL CONDUITS AND CONDUIT TAGGING.
3. CONDUITS SHALL BE SUPPORTED FROM THE CEILING OR WALLS OF THE ROOMS/AREAS THEY ARE LOCATED IN. SUPPORT SYSTEM SHALL BE DESIGNED BY THE CONTRACTOR AS PER SPECIFICATION SECTION 26 05 29.

WARNING
IT IS A VIOLATION OF SECTION 7209.2 OF THE NEW YORK STATE EDUCATION LAW FOR ANY PERSON, UNLESS ACTING UNDER THE DIRECTION OF A LICENSED PROFESSIONAL ENGINEER, TO ALTER IN ANY WAY PLANS, SPECIFICATIONS, PLATS OR REPORTS TO WHICH THE SEAL OF A PROFESSIONAL ENGINEER HAS BEEN APPLIED. IF AN ITEM BEARING THE SEAL OF A PROFESSIONAL ENGINEER IS ALTERED, THE ALTERING ENGINEER SHALL AFFIX TO THE ITEM HIS SEAL AND THE NOTATION "ALTERED BY" FOLLOWED BY HIS SIGNATURE, THE DATE, AND A SPECIFIC DESCRIPTION OF THE ALTERATION.

REV	ISSUED FOR	DATE	BY

PROJECT ENGINEER:	R. FROST
DESIGNED BY:	Y. ABDALLA
DRAWN BY:	R. CHUNG
CHECKED BY:	G. MARKOU
IF THIS BAR DOES NOT MEASURE 1" THEN DRAWING IS NOT TO FULL SCALE	0 1/2" 1"

BID SET

STATE OF NEW YORK · GEORGE MARKOU · 022603 · LICENSED PROFESSIONAL ENGINEER

Hazen

HAZEN AND SAWYER
498 SEVENTH AVENUE, 11th FLOOR
NEW YORK, NEW YORK 10018

WESTCHESTER JOINT WATER WORKS
MAMARONECK, NY

RYE LAKE WATER FILTRATION PLANT
HARRISON, NY

FILTRATION PLANT
ELECTRICAL
POWER PLAN - EL 407.00 - AREA 3

DATE:	FEB 2025
HAZEN NO.:	90388-000
CONTRACT NO.:	A1364-A
DRAWING NUMBER:	E-107

Autodesk Docs://90388-000_Rye_Lake_Filtration/90388-000-WFP-E.rvt
4/15/2025 4:31:32 PM

NOTES:

1. NO ELECTRICAL WORK ON THIS PLAN.

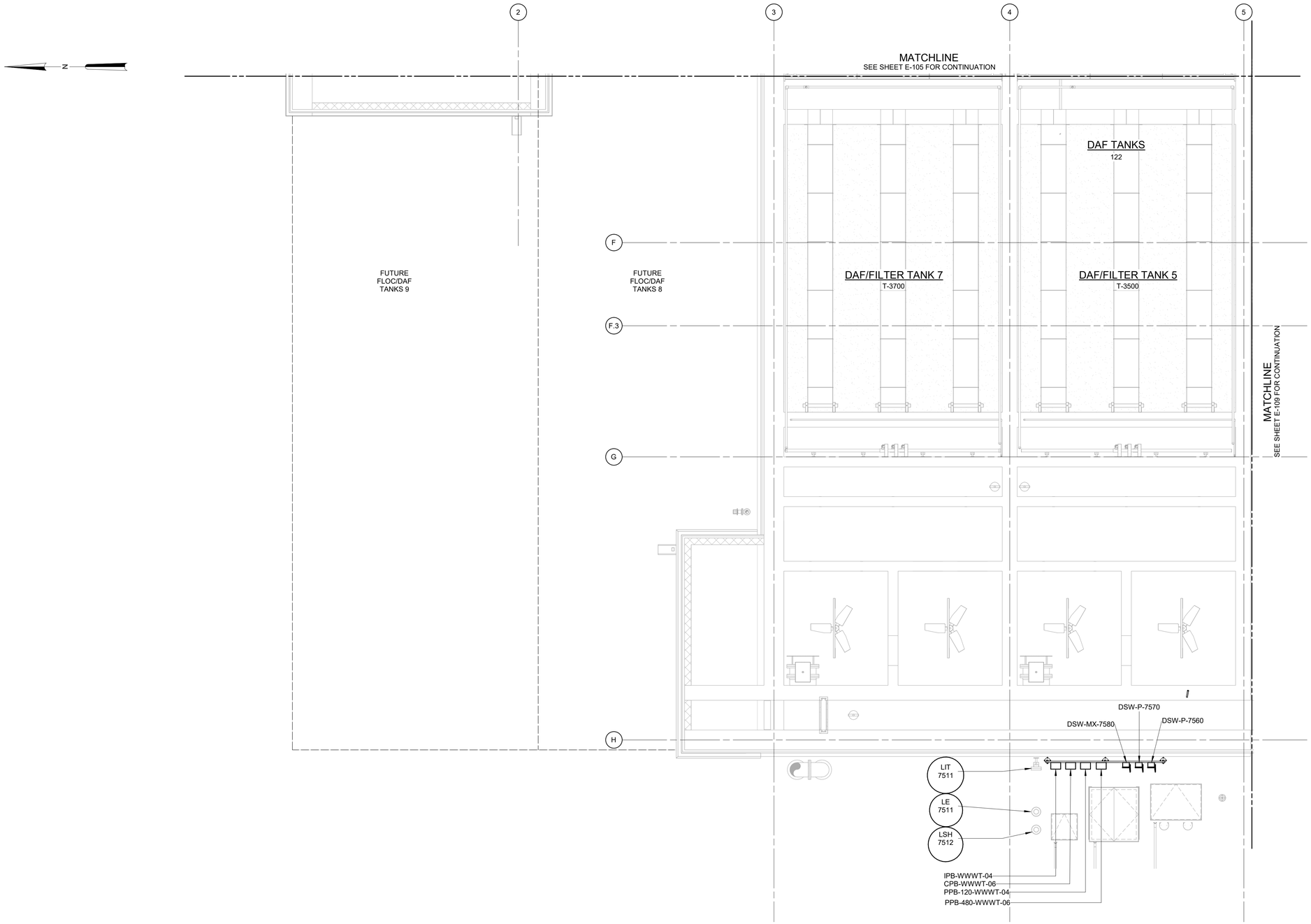

POWER PLAN AT EL 407.00 - AREA 4

3/16" = 1'-0"

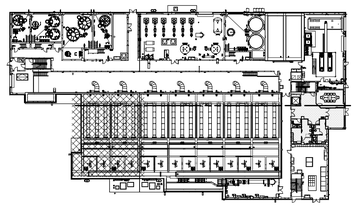

3/16" = 1'-0"

WARNING
IT IS A VIOLATION OF SECTION 7209.2 OF THE NEW YORK STATE EDUCATION LAW FOR ANY PERSON, UNLESS ACTING UNDER THE DIRECTION OF A LICENSED PROFESSIONAL ENGINEER, TO ALTER IN ANY WAY PLANS, SPECIFICATIONS, PLATS OR REPORTS TO WHICH THE SEAL OF A PROFESSIONAL ENGINEER HAS BEEN APPLIED. IF AN ITEM BEARING THE SEAL OF A PROFESSIONAL ENGINEER IS ALTERED, THE ALTERING ENGINEER SHALL AFFIX TO THE ITEM HIS SEAL AND THE NOTATION "ALTERED BY" FOLLOWED BY HIS SIGNATURE, THE DATE, AND A SPECIFIC DESCRIPTION OF THE ALTERATION.

REV	ISSUED FOR	DATE	BY

PROJECT ENGINEER:	R. FROST
DESIGNED BY:	Y. ABDALLA
DRAWN BY:	R. CHUNG
CHECKED BY:	G. MARKOU
IF THIS BAR DOES NOT MEASURE 1" THEN DRAWING IS NOT TO FULL SCALE	0 1/2" 1"

BID SET

STATE OF NEW YORK · GEORGE MARKOU · 072603 · LICENSED PROFESSIONAL ENGINEER

Hazen

HAZEN AND SAWYER
498 SEVENTH AVENUE, 11th FLOOR
NEW YORK, NEW YORK 10018

WESTCHESTER JOINT WATER WORKS
MAMARONECK, NY

RYE LAKE WATER FILTRATION PLANT
HARRISON, NY

FILTRATION PLANT
ELECTRICAL
POWER PLAN - EL 407.00 - AREA 4

DATE:	FEB 2025
HAZEN NO.:	90388-000
CONTRACT NO.:	A1364-A
DRAWING NUMBER:	E-108

Autodesk Docs://90388-000_Rye_Lake_ Filtration/90388-000-WFP-E.rvt
4/15/2025 3:05:59 PM

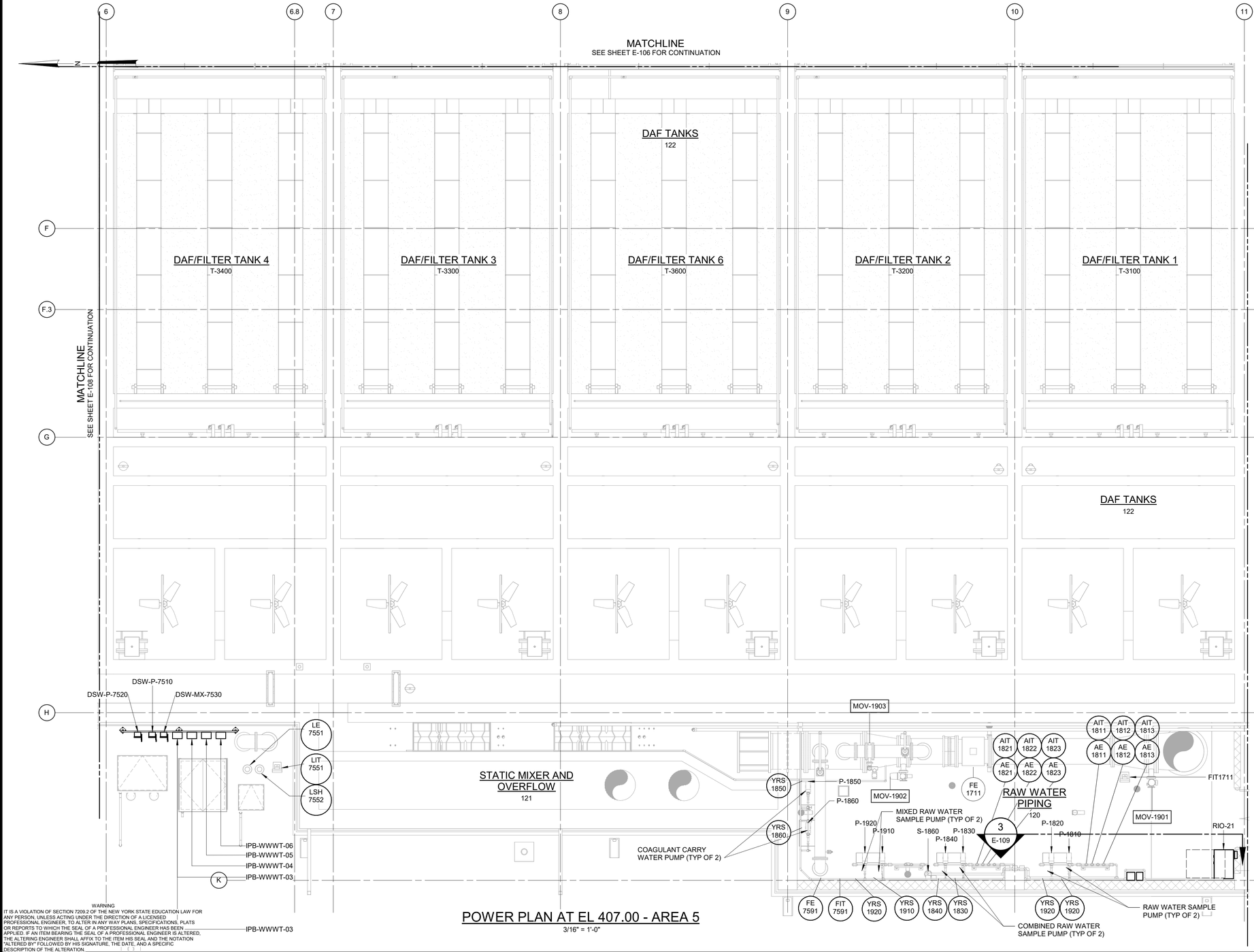

POWER PLAN AT EL 407.00 - AREA 5

3/16" = 1'-0"

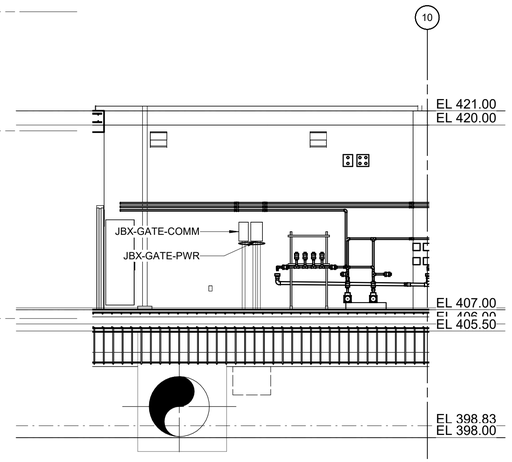

Section 5

3/16" = 1'-0"

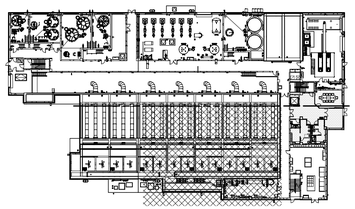

6 4 2 0 5'

3/16" = 1'-0"

NOTES:

1. CONDUITS UNDER 2" ARE NOT SHOWN ON THIS DRAWING.
2. REFER TO THE CONDUIT AND CABLE SCHEDULE FOR ALL CONDUITS AND CONDUIT TAGGING.
3. CONDUITS SHALL BE SUPPORTED FROM THE CEILING OR WALLS OF THE ROOMS/AREAS THEY ARE LOCATED IN. SUPPORT SYSTEM SHALL BE DESIGNED BY THE CONTRACTOR AS PER SPECIFICATION SECTION 26 05 29.

WARNING
IT IS A VIOLATION OF SECTION 7209.2 OF THE NEW YORK STATE EDUCATION LAW FOR ANY PERSON, UNLESS ACTING UNDER THE DIRECTION OF A LICENSED PROFESSIONAL ENGINEER, TO ALTER IN ANY WAY PLANS, SPECIFICATIONS, PLATS OR REPORTS TO WHICH THE SEAL OF A PROFESSIONAL ENGINEER HAS BEEN APPLIED. IF AN ITEM BEARING THE SEAL OF A PROFESSIONAL ENGINEER IS ALTERED, THE ALTERING ENGINEER SHALL AFFIX TO THE ITEM HIS SEAL AND THE NOTATION "ALTERED BY" FOLLOWED BY HIS SIGNATURE, THE DATE, AND A SPECIFIC DESCRIPTION OF THE ALTERATION.

REV	ISSUED FOR	DATE	BY

PROJECT ENGINEER:	R. FROST
DESIGNED BY:	Y. ABDALLA
DRAWN BY:	R. CHUNG
CHECKED BY:	G. MARKOU

IF THIS BAR DOES NOT MEASURE 1" THEN DRAWING IS NOT TO FULL SCALE — 0 1/2" 1"

BID SET



Hazen
HAZEN AND SAWYER
498 SEVENTH AVENUE, 11th FLOOR
NEW YORK, NEW YORK 10018

WESTCHESTER JOINT WATER WORKS
MAMARONECK, NY

RYE LAKE WATER FILTRATION PLANT
HARRISON, NY

FILTRATION PLANT
ELECTRICAL
POWER PLAN - EL 407.00 - AREA 5

DATE:	FEB 2025
HAZEN NO.:	90388-000
CONTRACT NO.:	A1364-A
DRAWING NUMBER:	E-109

Autodesk Docs://90388-000_Rye_Lake_Filtration/90388-000-WFP-E.rvt
4/15/2025 3:06:06 PM

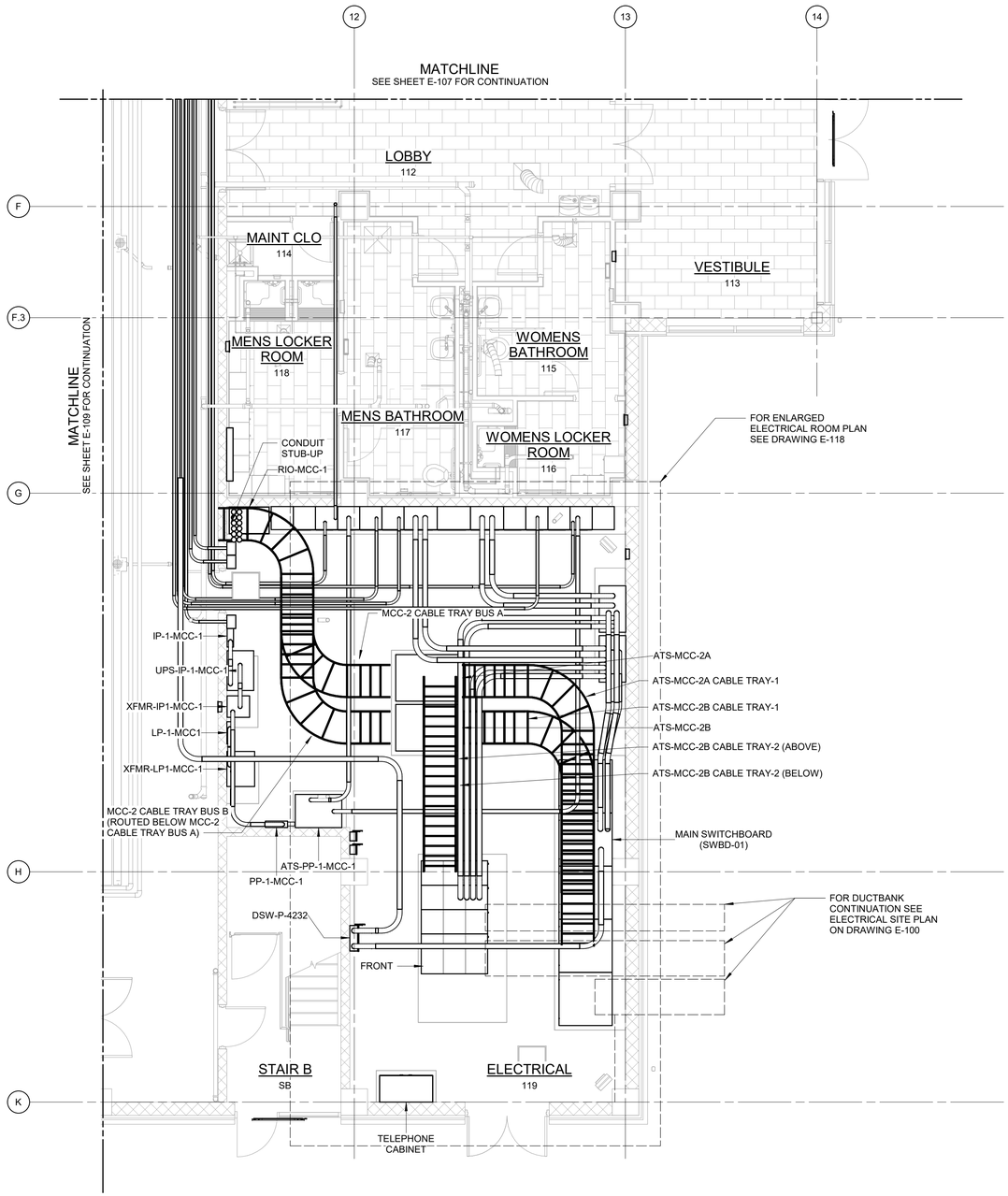

POWER PLAN AT EL 407.00 - AREA 6

3/16" = 1'-0"

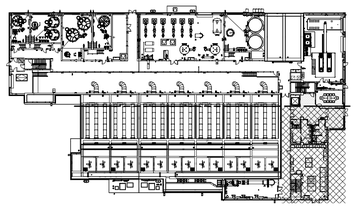

3/16" = 1'-0" 6 4 2 0 5'

NOTES:

1. CONDUITS UNDER 2" ARE NOT SHOWN ON THIS DRAWING.
2. REFER TO THE CONDUIT AND CABLE SCHEDULE FOR ALL CONDUITS AND CONDUIT TAGGING.
3. CONDUITS SHALL BE SUPPORTED FROM THE CEILING OR WALLS OF THE ROOMS/AREAS THEY ARE LOCATED IN. SUPPORT SYSTEM SHALL BE DESIGNED BY THE CONTRACTOR AS PER SPECIFICATION SECTION 26 05 29.

WARNING
IT IS A VIOLATION OF SECTION 7209.2 OF THE NEW YORK STATE EDUCATION LAW FOR ANY PERSON, UNLESS ACTING UNDER THE DIRECTION OF A LICENSED PROFESSIONAL ENGINEER, TO ALTER IN ANY WAY PLANS, SPECIFICATIONS, PLATS OR REPORTS TO WHICH THE SEAL OF A PROFESSIONAL ENGINEER HAS BEEN APPLIED. IF AN ITEM BEARING THE SEAL OF A PROFESSIONAL ENGINEER IS ALTERED, THE ALTERING ENGINEER SHALL AFFIX TO THE ITEM HIS SEAL AND THE NOTATION "ALTERED BY" FOLLOWED BY HIS SIGNATURE, THE DATE, AND A SPECIFIC DESCRIPTION OF THE ALTERATION.

REV	ISSUED FOR	DATE	BY

PROJECT ENGINEER:	R. FROST
DESIGNED BY:	Y. ABDALLA
DRAWN BY:	R. CHUNG
CHECKED BY:	G. MARKOU

IF THIS BAR DOES NOT MEASURE 1" THEN DRAWING IS NOT TO FULL SCALE 0 1/2" 1"

BID SET

STATE OF NEW YORK · GEORGE MARKOU · 072603 · LICENSED PROFESSIONAL ENGINEER

Hazen
HAZEN AND SAWYER
498 SEVENTH AVENUE, 11th FLOOR
NEW YORK, NEW YORK 10018

WESTCHESTER JOINT WATER WORKS
MAMARONECK, NY

RYE LAKE WATER FILTRATION PLANT
HARRISON, NY

FILTRATION PLANT
ELECTRICAL
POWER PLAN - EL 407.00 - AREA 6

DATE:	FEB 2025
HAZEN NO.:	90388-000
CONTRACT NO.:	A1364-A
DRAWING NUMBER:	E-110

Autodesk Docs://90388-000_Rye_Lake_Filtration/90388-000-WFP-E.rvt
4/15/2025 3:06:10 PM

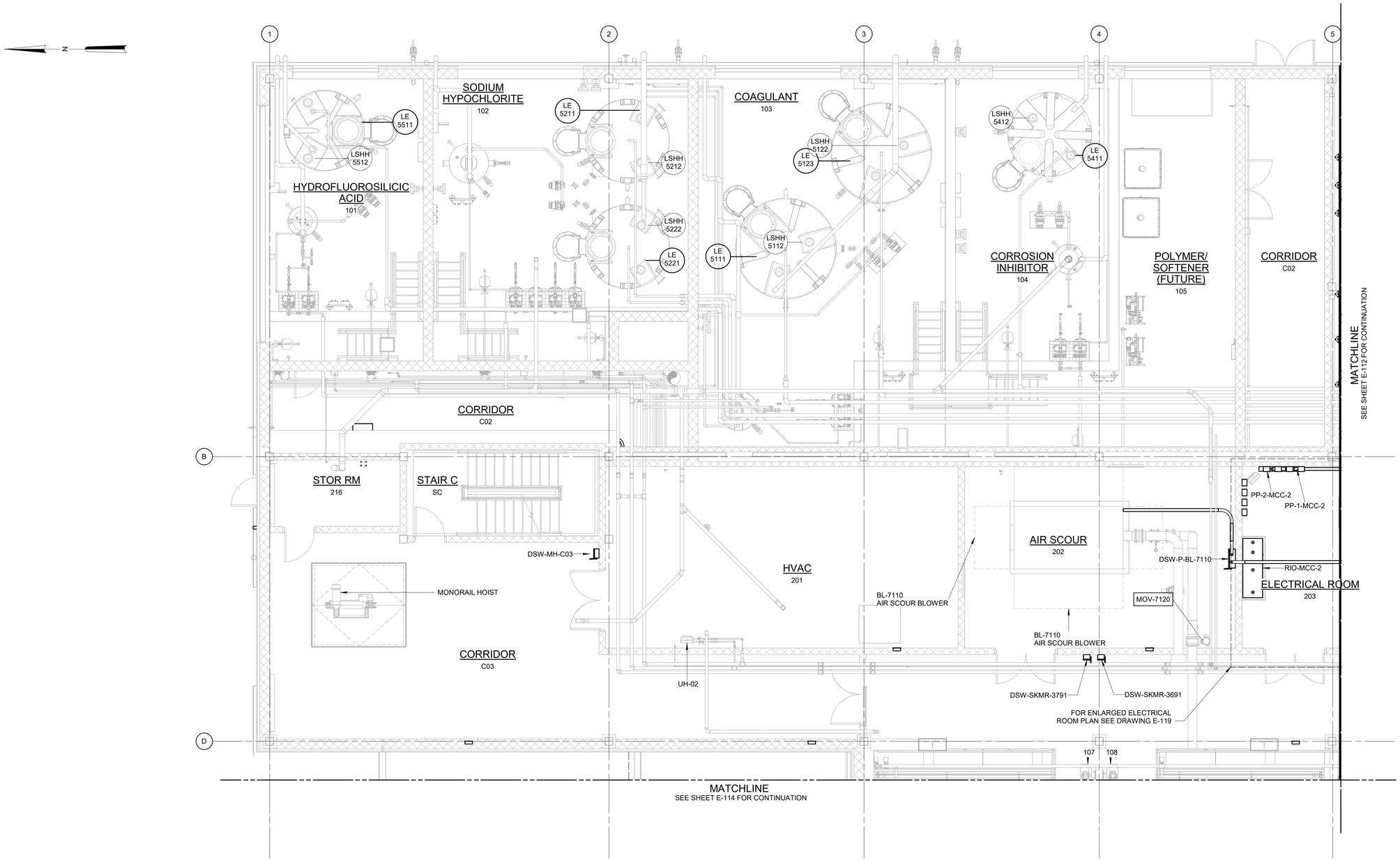

NOTES:

1. CONDUITS UNDER 2" ARE NOT SHOWN ON THIS DRAWING.
2. REFER TO THE CONDUIT AND CABLE SCHEDULE FOR ALL CONDUITS AND CONDUIT TAGGING.
3. CONDUITS SHALL BE SUPPORTED FROM THE CEILING OR WALLS OF THE ROOMS/AREAS THEY ARE LOCATED IN. SUPPORT SYSTEM SHALL BE DESIGNED BY THE CONTRACTOR AS PER SPECIFICATION SECTION 26 05 29.

POWER PLAN AT EL 421.00 - AREA 1

3/16" = 1'-0"

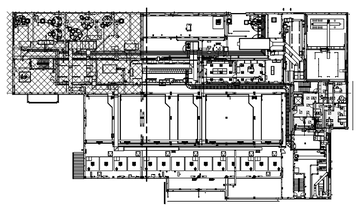

3/16" = 1'-0" 6 4 2 0 5'

WARNING
IT IS A VIOLATION OF SECTION 7209.2 OF THE NEW YORK STATE EDUCATION LAW FOR ANY PERSON, UNLESS ACTING UNDER THE DIRECTION OF A LICENSED PROFESSIONAL ENGINEER, TO ALTER IN ANY WAY PLANS, SPECIFICATIONS, PLATS OR REPORTS TO WHICH THE SEAL OF A PROFESSIONAL ENGINEER HAS BEEN APPLIED. IF AN ITEM BEARING THE SEAL OF A PROFESSIONAL ENGINEER IS ALTERED, THE ALTERING ENGINEER SHALL AFFIX TO THE ITEM HIS SEAL AND THE NOTATION "ALTERED BY" FOLLOWED BY HIS SIGNATURE, THE DATE, AND A SPECIFIC DESCRIPTION OF THE ALTERATION.

REV	ISSUED FOR	DATE	BY

PROJECT ENGINEER:	R. FROST
DESIGNED BY:	Y. ABDALLA
DRAWN BY:	R. CHUNG
CHECKED BY:	G. MARKOU

IF THIS BAR DOES NOT MEASURE 1" THEN DRAWING IS NOT TO FULL SCALE 0 1/2" 1"

BID SET

NEW YORK STATE OF GEORGE MARKOU 072603 LICENSED PROFESSIONAL ENGINEER

Hazen

HAZEN AND SAWYER
498 SEVENTH AVENUE, 11th FLOOR
NEW YORK, NEW YORK 10018

WESTCHESTER JOINT WATER WORKS
MAMARONECK, NY

RYE LAKE WATER FILTRATION PLANT
HARRISON, NY

FILTRATION PLANT
ELECTRICAL
POWER PLAN - EL 421.00 - AREA 1

DATE:	FEB 2025
HAZEN NO.:	90388-000
CONTRACT NO.:	A1364-A
DRAWING NUMBER:	E-111

Autodesk Docs://90388-000_Rye_Lake_Filtration/90388-000-WFP-E.rvt
4/15/2025 3:06:17 PM

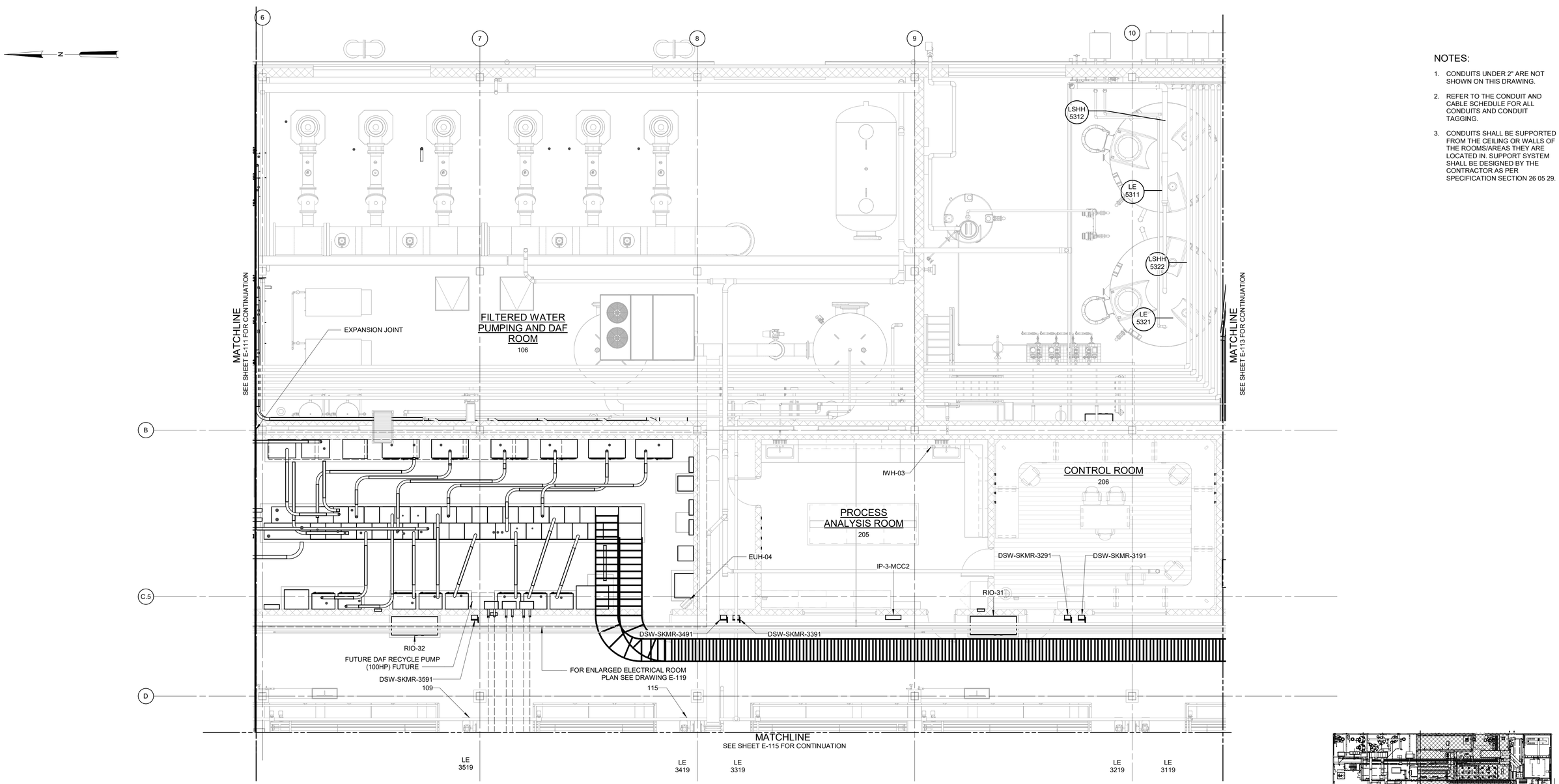

NOTES:

1. CONDUITS UNDER 2" ARE NOT SHOWN ON THIS DRAWING.
2. REFER TO THE CONDUIT AND CABLE SCHEDULE FOR ALL CONDUITS AND CONDUIT TAGGING.
3. CONDUITS SHALL BE SUPPORTED FROM THE CEILING OR WALLS OF THE ROOMS/AREAS THEY ARE LOCATED IN. SUPPORT SYSTEM SHALL BE DESIGNED BY THE CONTRACTOR AS PER SPECIFICATION SECTION 26 05 29.

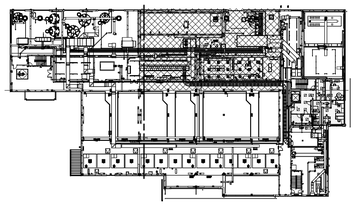

3/16" = 1'-0"

POWER PLAN AT EL 421.00 - AREA 2

3/16" = 1'-0"

WARNING
IT IS A VIOLATION OF SECTION 7209.2 OF THE NEW YORK STATE EDUCATION LAW FOR ANY PERSON, UNLESS ACTING UNDER THE DIRECTION OF A LICENSED PROFESSIONAL ENGINEER, TO ALTER IN ANY WAY PLANS, SPECIFICATIONS, PLATS OR REPORTS TO WHICH THE SEAL OF A PROFESSIONAL ENGINEER HAS BEEN APPLIED. IF AN ITEM BEARING THE SEAL OF A PROFESSIONAL ENGINEER IS ALTERED, THE ALTERING ENGINEER SHALL AFFIX TO THE ITEM HIS SEAL AND THE NOTATION "ALTERED BY" FOLLOWED BY HIS SIGNATURE, THE DATE, AND A SPECIFIC DESCRIPTION OF THE ALTERATION.

REV	ISSUED FOR	DATE	BY

PROJECT ENGINEER:	R. FROST
DESIGNED BY:	Y. ABDALLA
DRAWN BY:	R. CHUNG
CHECKED BY:	G. MARKOU
IF THIS BAR DOES NOT MEASURE 1" THEN DRAWING IS NOT TO FULL SCALE	0 1/2" 1"

BID SET

STATE OF NEW YORK · JORGE MARKOU · 072603 · LICENSED PROFESSIONAL ENGINEER

Hazen

HAZEN AND SAWYER
498 SEVENTH AVENUE, 11th FLOOR
NEW YORK, NEW YORK 10018

WESTCHESTER JOINT WATER WORKS
MAMARONECK, NY

RYE LAKE WATER FILTRATION PLANT
HARRISON, NY

FILTRATION PLANT
ELECTRICAL
POWER PLAN - EL 421.00 - AREA 2

DATE:	FEB 2025
HAZEN NO.:	90388-000
CONTRACT NO.:	A1364-A
DRAWING NUMBER:	E-112

Autodesk Docs://90388-000_Rye_Lake_Filtration/90388-000-WFP-E.rvt
4/15/2025 3:06:22 PM

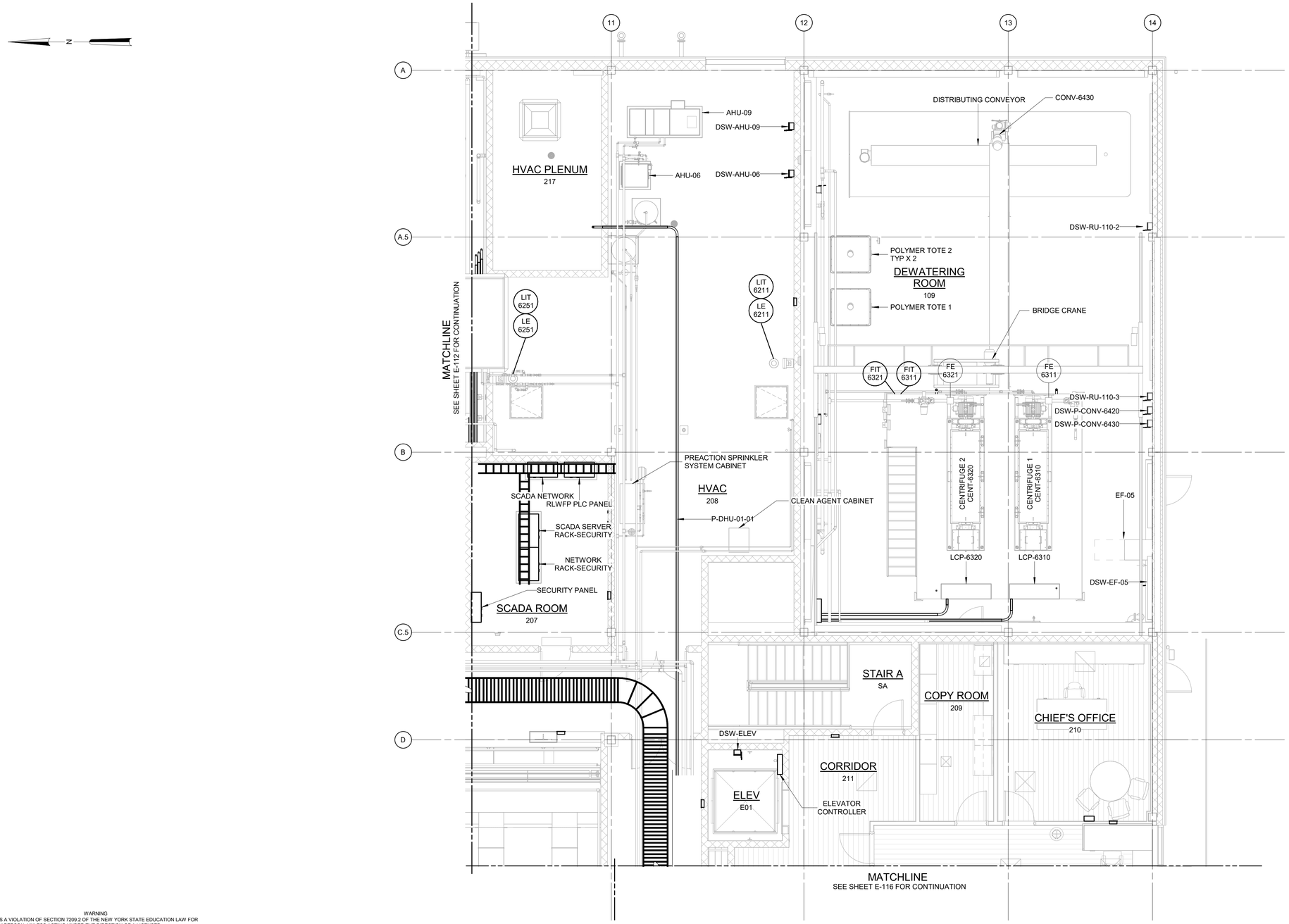

POWER PLAN AT EL 421.00 - AREA 3

3/16" = 1'-0"

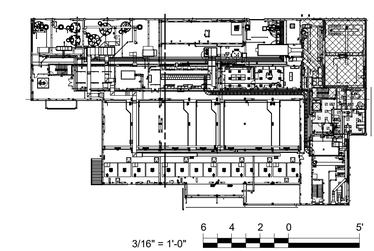

NOTES:

1. CONDUITS UNDER 2" ARE NOT SHOWN ON THIS DRAWING.
2. REFER TO THE CONDUIT AND CABLE SCHEDULE FOR ALL CONDUITS AND CONDUIT TAGGING.
3. CONDUITS SHALL BE SUPPORTED FROM THE CEILING OR WALLS OF THE ROOMS/AREAS THEY ARE LOCATED IN. SUPPORT SYSTEM SHALL BE DESIGNED BY THE CONTRACTOR AS PER SPECIFICATION SECTION 26 05 29.

WARNING
IT IS A VIOLATION OF SECTION 7209.2 OF THE NEW YORK STATE EDUCATION LAW FOR ANY PERSON, UNLESS ACTING UNDER THE DIRECTION OF A LICENSED PROFESSIONAL ENGINEER, TO ALTER IN ANY WAY PLANS, SPECIFICATIONS, PLATS OR REPORTS TO WHICH THE SEAL OF A PROFESSIONAL ENGINEER HAS BEEN APPLIED. IF AN ITEM BEARING THE SEAL OF A PROFESSIONAL ENGINEER IS ALTERED, THE ALTERING ENGINEER SHALL AFFIX TO THE ITEM HIS SEAL AND THE NOTATION "ALTERED BY" FOLLOWED BY HIS SIGNATURE, THE DATE, AND A SPECIFIC DESCRIPTION OF THE ALTERATION.

REV	ISSUED FOR	DATE	BY

PROJECT ENGINEER:	R. FROST
DESIGNED BY:	Y. ABDALLA
DRAWN BY:	R. CHUNG
CHECKED BY:	G. MARKOU
IF THIS BAR DOES NOT MEASURE 1" THEN DRAWING IS NOT TO FULL SCALE	0 1/2" 1"

BID SET

STATE OF NEW YORK
GEORGE MARKOU
072603
LICENSED PROFESSIONAL ENGINEER

Hazen

HAZEN AND SAWYER
498 SEVENTH AVENUE, 11th FLOOR
NEW YORK, NEW YORK 10018

WESTCHESTER JOINT WATER WORKS
MAMARONECK, NY

RYE LAKE WATER FILTRATION PLANT
HARRISON, NY

FILTRATION PLANT
ELECTRICAL
POWER PLAN - EL 421.00 - AREA 3

DATE:	FEB 2025
HAZEN NO.:	90388-000
CONTRACT NO.:	A1364-A
DRAWING NUMBER:	E-113

Autodesk Docs://90388-000_Rye_Lake_Filtration/90388-000-WFP-E.rvt
4/15/2025 3:06:27 PM

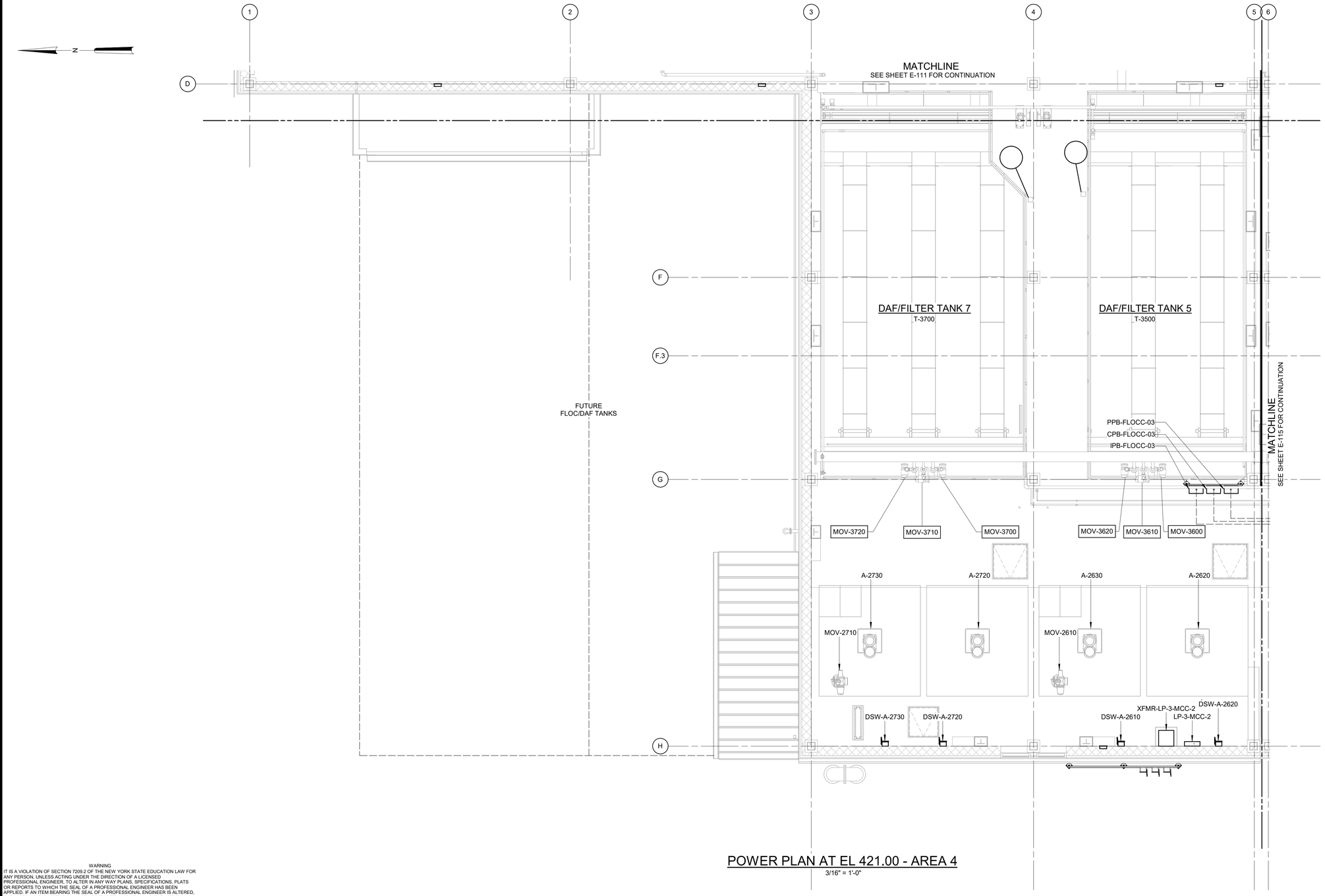

POWER PLAN AT EL 421.00 - AREA 4

3/16" = 1'-0"

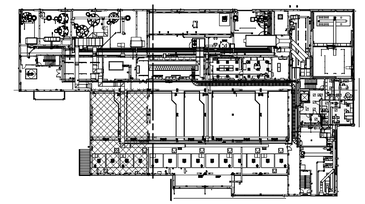

3/16" = 1'-0"

NOTES:

1. CONDUITS UNDER 2" ARE NOT SHOWN ON THIS DRAWING.
2. REFER TO THE CONDUIT AND CABLE SCHEDULE FOR ALL CONDUITS AND CONDUIT TAGGING.
3. CONDUITS SHALL BE SUPPORTED FROM THE CEILING OR WALLS OF THE ROOMS/AREAS THEY ARE LOCATED IN. SUPPORT SYSTEM SHALL BE DESIGNED BY THE CONTRACTOR AS PER SPECIFICATION SECTION 26 05 29.

WARNING
IT IS A VIOLATION OF SECTION 7209.2 OF THE NEW YORK STATE EDUCATION LAW FOR ANY PERSON, UNLESS ACTING UNDER THE DIRECTION OF A LICENSED PROFESSIONAL ENGINEER, TO ALTER IN ANY WAY PLANS, SPECIFICATIONS, PLATS OR REPORTS TO WHICH THE SEAL OF A PROFESSIONAL ENGINEER HAS BEEN APPLIED. IF AN ITEM BEARING THE SEAL OF A PROFESSIONAL ENGINEER IS ALTERED, THE ALTERING ENGINEER SHALL AFFIX TO THE ITEM HIS SEAL AND THE NOTATION "ALTERED BY" FOLLOWED BY HIS SIGNATURE, THE DATE, AND A SPECIFIC DESCRIPTION OF THE ALTERATION.

REV	ISSUED FOR	DATE	BY

PROJECT ENGINEER:	R. FROST
DESIGNED BY:	Y. ABDALLA
DRAWN BY:	R. CHUNG
CHECKED BY:	G. MARKOU

IF THIS BAR DOES NOT MEASURE 1" THEN DRAWING IS NOT TO FULL SCALE 0 1/2" 1"

BID SET

STATE OF NEW YORK · GEORGE MARKOU · 022603 · LICENSED PROFESSIONAL ENGINEER

Hazen
HAZEN AND SAWYER
498 SEVENTH AVENUE, 11th FLOOR
NEW YORK, NEW YORK 10018

WESTCHESTER JOINT WATER WORKS
MAMARONECK, NY

RYE LAKE WATER FILTRATION PLANT
HARRISON, NY

FILTRATION PLANT
ELECTRICAL
POWER PLAN - EL 421.00 - AREA 4

DATE:	FEB 2025
HAZEN NO.:	90388-000
CONTRACT NO.:	A1364-A
DRAWING NUMBER:	E-114

Autodesk Docs://90388-000_Rye_Lake_Filtration/90388-000-WFP-E.rvt
4/15/2025 3:06:31 PM

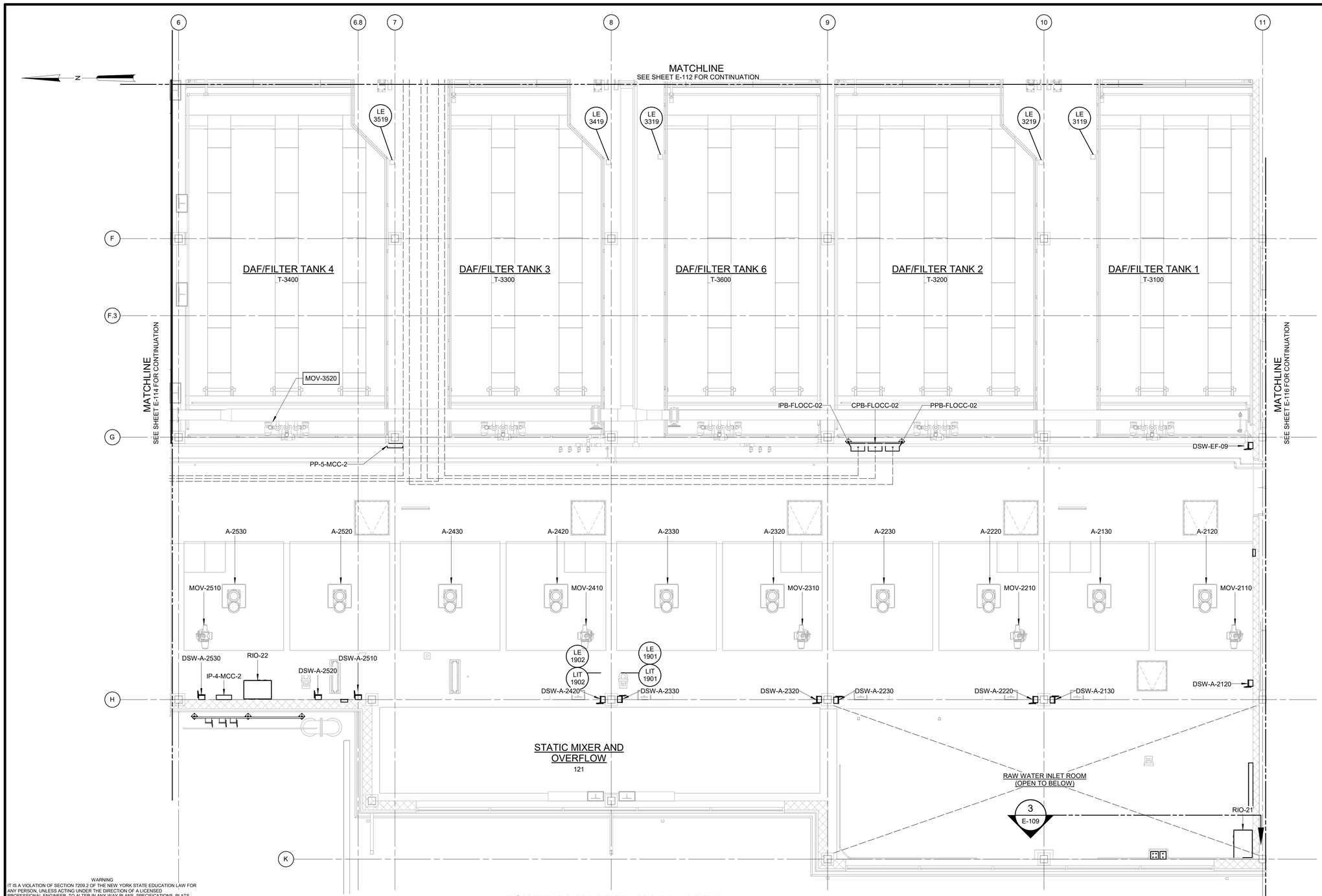

POWER PLAN AT EL 421.00 - AREA 5

3/16" = 1'-0"

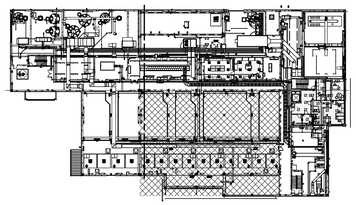

3/16" = 1'-0"

NOTES:

1. CONDUITS UNDER 2" ARE NOT SHOWN ON THIS DRAWING.
2. REFER TO THE CONDUIT AND CABLE SCHEDULE FOR ALL CONDUITS AND CONDUIT TAGGING.
3. CONDUITS SHALL BE SUPPORTED FROM THE CEILING OR WALLS OF THE ROOMS/AREAS THEY ARE LOCATED IN. SUPPORT SYSTEM SHALL BE DESIGNED BY THE CONTRACTOR AS PER SPECIFICATION SECTION 26 05 29.

WARNING
IT IS A VIOLATION OF SECTION 7209.2 OF THE NEW YORK STATE EDUCATION LAW FOR ANY PERSON, UNLESS ACTING UNDER THE DIRECTION OF A LICENSED PROFESSIONAL ENGINEER, TO ALTER IN ANY WAY PLANS, SPECIFICATIONS, PLATS OR REPORTS TO WHICH THE SEAL OF A PROFESSIONAL ENGINEER HAS BEEN APPLIED. IF AN ITEM BEARING THE SEAL OF A PROFESSIONAL ENGINEER IS ALTERED, THE ALTERING ENGINEER SHALL AFFIX TO THE ITEM HIS SEAL AND THE NOTATION "ALTERED BY" FOLLOWED BY HIS SIGNATURE, THE DATE, AND A SPECIFIC DESCRIPTION OF THE ALTERATION.

REV	ISSUED FOR	DATE	BY

PROJECT ENGINEER:	R. FROST
DESIGNED BY:	Y. ABDALLA
DRAWN BY:	R. CHUNG
CHECKED BY:	G. MARKOU

IF THIS BAR DOES NOT MEASURE 1" THEN DRAWING IS NOT TO FULL SCALE — 0 1/2" 1"

BID SET

STATE OF NEW YORK — JORGE MARKOU — 072603 — LICENSED PROFESSIONAL ENGINEER

Hazen
HAZEN AND SAWYER
498 SEVENTH AVENUE, 11th FLOOR
NEW YORK, NEW YORK 10018

WESTCHESTER JOINT WATER WORKS
MAMARONECK, NY

RYE LAKE WATER FILTRATION PLANT
HARRISON, NY

FILTRATION PLANT
ELECTRICAL
POWER PLAN - EL 421.00 - AREA 5

DATE:	FEB 2025
HAZEN NO.:	90388-000
CONTRACT NO.:	A1364-A
DRAWING NUMBER:	E-115

Autodesk Docs://90388-000_Rye_Lake_Filtration/90388-000-WFP-E.rvt
4/15/2025 3:06:35 PM

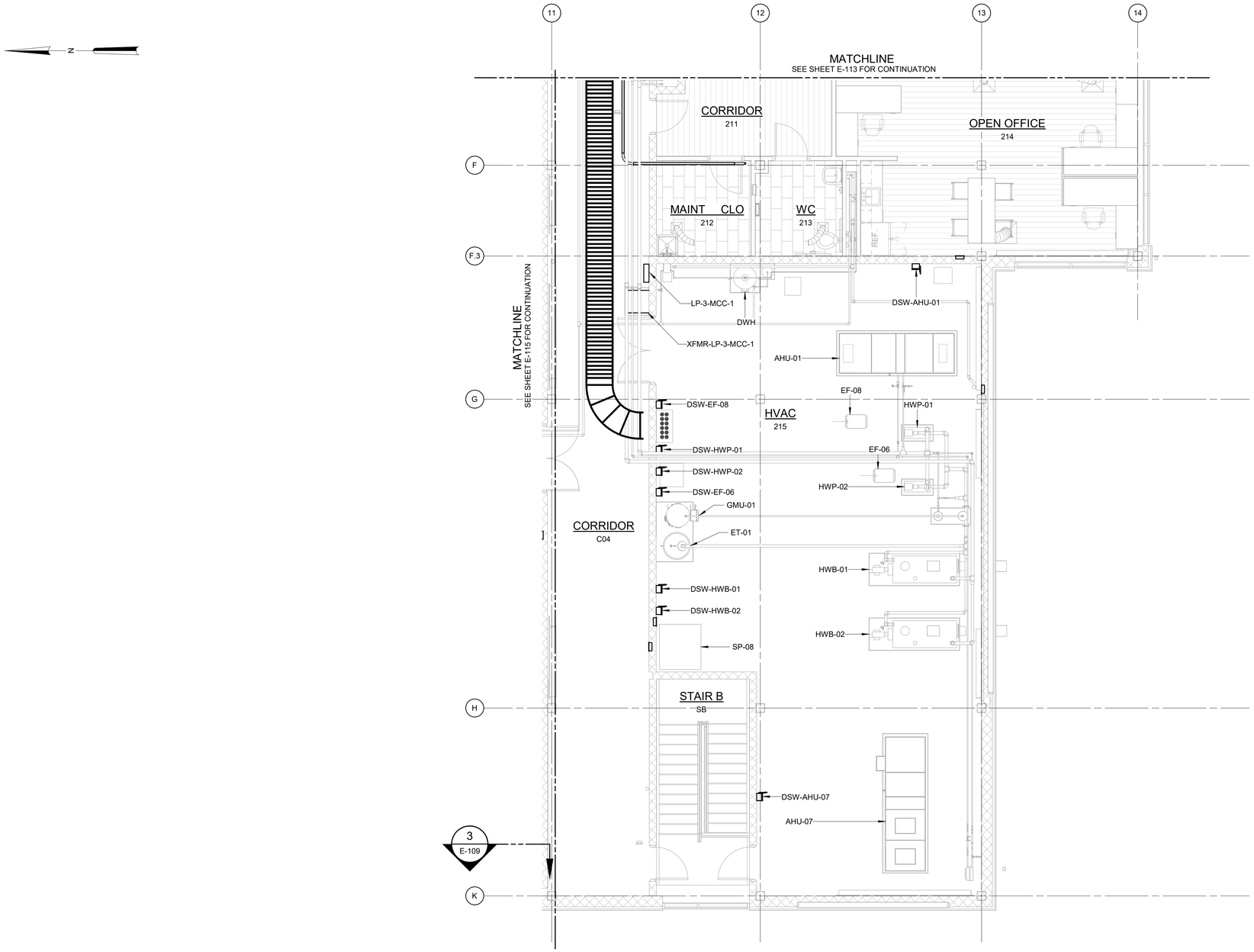

POWER PLAN AT EL 421.00 - AREA 6

3/16" = 1'-0"

NOTES:

1. CONDUITS UNDER 2" ARE NOT SHOWN ON THIS DRAWING.
2. REFER TO THE CONDUIT AND CABLE SCHEDULE FOR ALL CONDUITS AND CONDUIT TAGGING.
3. CONDUITS SHALL BE SUPPORTED FROM THE CEILING OR WALLS OF THE ROOMS/AREAS THEY ARE LOCATED IN. SUPPORT SYSTEM SHALL BE DESIGNED BY THE CONTRACTOR AS PER SPECIFICATION SECTION 26 05 29.

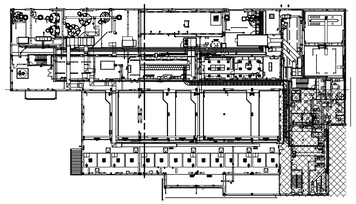

3/16" = 1'-0"

WARNING
IT IS A VIOLATION OF SECTION 7209.2 OF THE NEW YORK STATE EDUCATION LAW FOR ANY PERSON, UNLESS ACTING UNDER THE DIRECTION OF A LICENSED PROFESSIONAL ENGINEER, TO ALTER IN ANY WAY PLANS, SPECIFICATIONS, PLATS OR REPORTS TO WHICH THE SEAL OF A PROFESSIONAL ENGINEER HAS BEEN APPLIED. IF AN ITEM BEARING THE SEAL OF A PROFESSIONAL ENGINEER IS ALTERED, THE ALTERING ENGINEER SHALL AFFIX TO THE ITEM HIS SEAL AND THE NOTATION "ALTERED BY" FOLLOWED BY HIS SIGNATURE, THE DATE, AND A SPECIFIC DESCRIPTION OF THE ALTERATION.

REV	ISSUED FOR	DATE	BY

PROJECT ENGINEER:	R. FROST
DESIGNED BY:	Y. ABDALLA
DRAWN BY:	R. CHUNG
CHECKED BY:	G. MARKOU

IF THIS BAR DOES NOT MEASURE 1" THEN DRAWING IS NOT TO FULL SCALE 0 1/2" 1"

BID SET

STATE OF NEW YORK · GEORGE MARKOU · 072603 · LICENSED PROFESSIONAL ENGINEER

Hazen

HAZEN AND SAWYER
498 SEVENTH AVENUE, 11th FLOOR
NEW YORK, NEW YORK 10018

WESTCHESTER JOINT WATER WORKS
MAMARONECK, NY

RYE LAKE WATER FILTRATION PLANT
HARRISON, NY

FILTRATION PLANT
ELECTRICAL
POWER PLAN - EL 421.00 - AREA 6

DATE:	FEB 2025
HAZEN NO.:	90388-000
CONTRACT NO.:	A1364-A
DRAWING NUMBER:	E-116

Autodesk Docs://90388-000_Rye_Lake_Filtration/90388-000-WFP-E.rvt
4/15/2025 3:06:39 PM

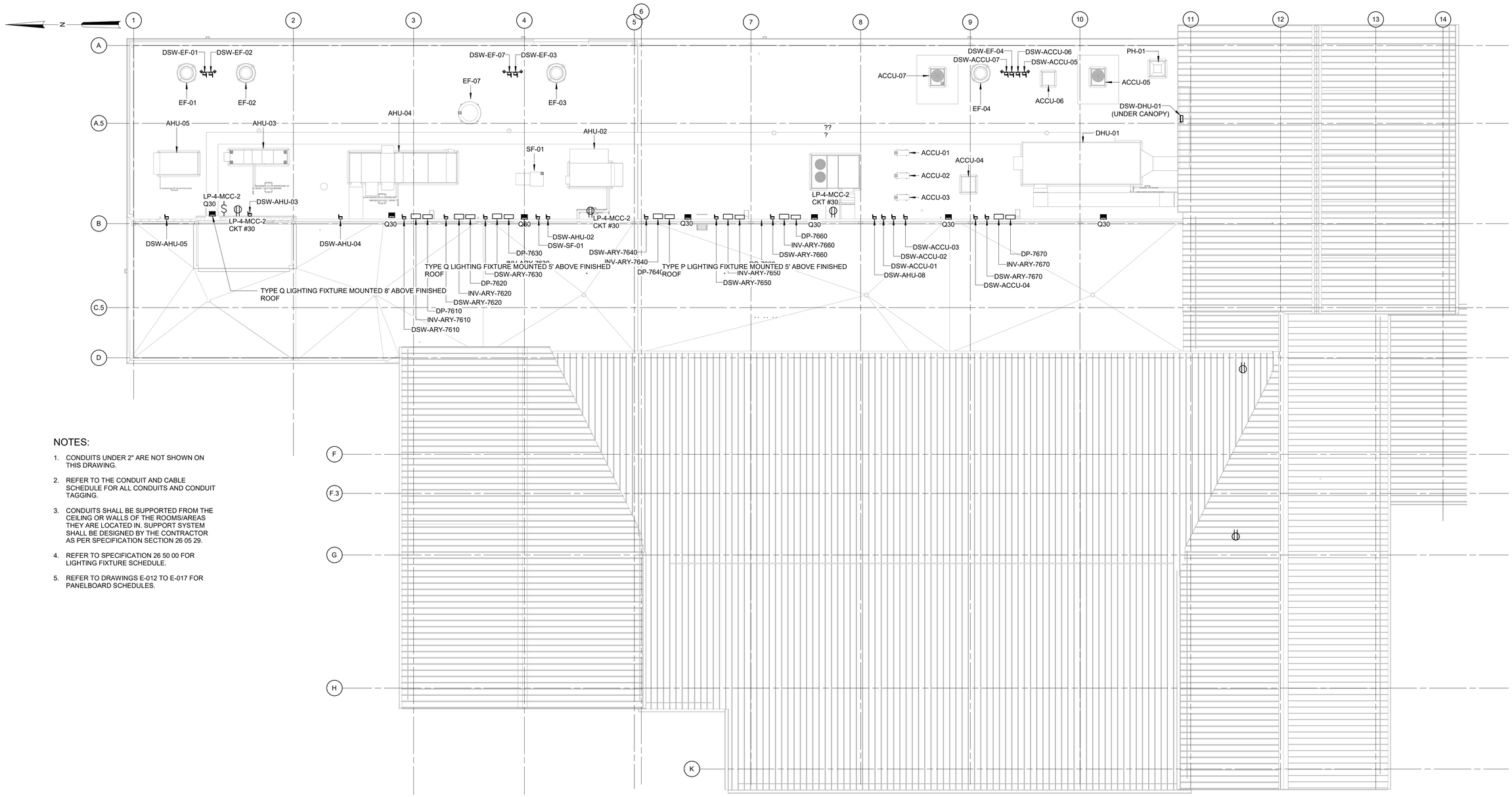

NOTES:

1. CONDUITS UNDER 2" ARE NOT SHOWN ON THIS DRAWING.
2. REFER TO THE CONDUIT AND CABLE SCHEDULE FOR ALL CONDUITS AND CONDUIT TAGGING.
3. CONDUITS SHALL BE SUPPORTED FROM THE CEILING OR WALLS OF THE ROOMS/AREAS THEY ARE LOCATED IN. SUPPORT SYSTEM SHALL BE DESIGNED BY THE CONTRACTOR AS PER SPECIFICATION SECTION 26 05 29.
4. REFER TO SPECIFICATION 26 50 00 FOR LIGHTING FIXTURE SCHEDULE.
5. REFER TO DRAWINGS E-012 TO E-017 FOR PANELBOARD SCHEDULES.

WARNING
IT IS A VIOLATION OF SECTION 7209.2 OF THE NEW YORK STATE EDUCATION LAW FOR ANY PERSON, UNLESS ACTING UNDER THE DIRECTION OF A LICENSED PROFESSIONAL ENGINEER, TO ALTER IN ANY WAY PLANS, SPECIFICATIONS, PLATS OR REPORTS TO WHICH THE SEAL OF A PROFESSIONAL ENGINEER HAS BEEN APPLIED. IF AN ITEM BEARING THE SEAL OF A PROFESSIONAL ENGINEER IS ALTERED, THE ALTERING ENGINEER SHALL AFFIX TO THE ITEM HIS SEAL AND THE NOTATION "ALTERED BY" FOLLOWED BY HIS SIGNATURE, THE DATE, AND A SPECIFIC DESCRIPTION OF THE ALTERATION.

POWER & LIGHTING - ROOF PLAN - SHEET 1

3/32" = 1'-0"

3/32" = 1'-0" 10 8 6 4 2 0 11'

REV	ISSUED FOR	DATE	BY

PROJECT ENGINEER:	R. FROST
DESIGNED BY:	Y. ABDALLA
DRAWN BY:	P. NUGENT
CHECKED BY:	G. MARKOU
IF THIS BAR DOES NOT MEASURE 1" THEN DRAWING IS NOT TO FULL SCALE	0 1/2" 1"

BID SET

STATE OF NEW YORK GEORGE MARKOU 022603 LICENSED PROFESSIONAL ENGINEER

Hazen
HAZEN AND SAWYER
498 SEVENTH AVENUE, 11th FLOOR
NEW YORK, NEW YORK 10018

WESTCHESTER JOINT WATER WORKS
MAMARONECK, NY

RYE LAKE WATER FILTRATION PLANT
HARRISON, NY

FILTRATION PLANT
ELECTRICAL
POWER AND LIGHTING PLAN - EL 436.50 - ROOF

DATE:	FEB 2025
HAZEN NO.:	90388-000
CONTRACT NO.:	A1364-A
DRAWING NUMBER:	E-117

Autodesk Docs://90388-000_Rye_Lake_Filtration/90388-000-WFP-E.rvt
4/15/2025 3:06:42 PM

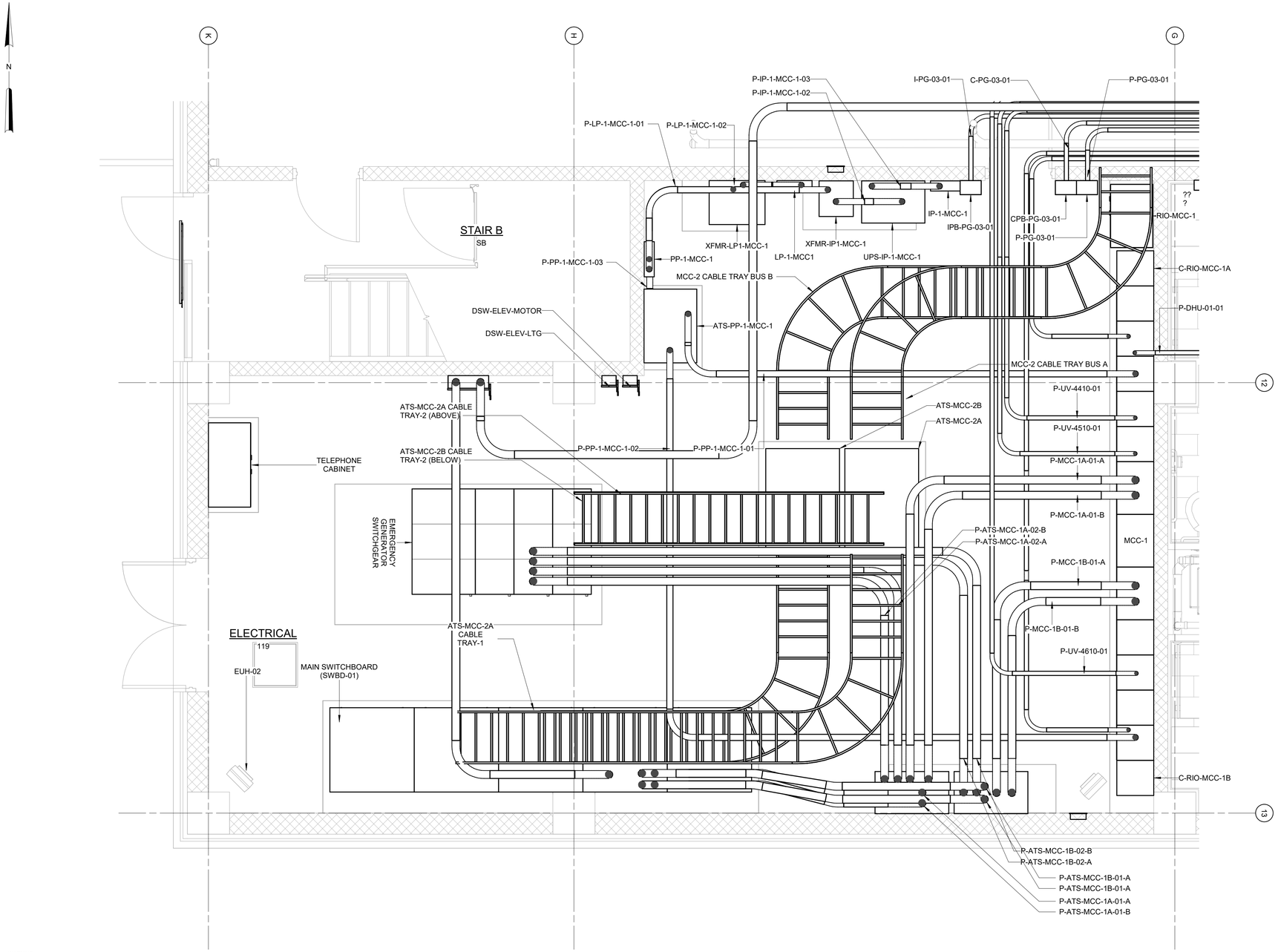

NOTES:

1. CONDUITS UNDER 2" ARE NOT SHOWN ON THIS DRAWING.
2. REFER TO THE CONDUIT AND CABLE SCHEDULE FOR ALL CONDUITS AND CONDUIT TAGGING.
3. CONDUITS SHALL BE SUPPORTED FROM THE CEILING OR WALLS OF THE ROOMS/AREAS THEY ARE LOCATED IN. SUPPORT SYSTEM SHALL BE DESIGNED BY THE CONTRACTOR AS PER SPECIFICATION SECTION 26 05 29.

ENLARGED ELEC RM PLAN - EL 407.00

3/8" = 1'-0"

3/8" = 1'-0"

12" 0 1 2 4'

WARNING
IT IS A VIOLATION OF SECTION 7209.2 OF THE NEW YORK STATE EDUCATION LAW FOR ANY PERSON, UNLESS ACTING UNDER THE DIRECTION OF A LICENSED PROFESSIONAL ENGINEER, TO ALTER IN ANY WAY PLANS, SPECIFICATIONS, PLATS OR REPORTS TO WHICH THE SEAL OF A PROFESSIONAL ENGINEER HAS BEEN APPLIED. IF AN ITEM BEARING THE SEAL OF A PROFESSIONAL ENGINEER IS ALTERED, THE ALTERING ENGINEER SHALL AFFIX TO THE ITEM HIS SEAL AND THE NOTATION "ALTERED BY" FOLLOWED BY HIS SIGNATURE, THE DATE, AND A SPECIFIC DESCRIPTION OF THE ALTERATION.

REV	ISSUED FOR	DATE	BY

PROJECT ENGINEER:	R. FROST
DESIGNED BY:	Y. ABDALLA
DRAWN BY:	R. CHUNG
CHECKED BY:	G. MARKOU

IF THIS BAR DOES NOT MEASURE 1" THEN DRAWING IS NOT TO FULL SCALE 0 1/2" 1"

BID SET

NEW YORK STATE OF GEORGE MARKOU 072603 LICENSED PROFESSIONAL ENGINEER

Hazen
HAZEN AND SAWYER
498 SEVENTH AVENUE, 11th FLOOR
NEW YORK, NEW YORK 10018

WESTCHESTER JOINT WATER WORKS
MAMARONECK, NY

RYE LAKE WATER FILTRATION PLANT
HARRISON, NY

FILTRATION PLANT
ELECTRICAL
ENLARGED ELECTRICAL ROOM - EL 407.00

DATE:	FEB 2025
HAZEN NO.:	90388-000
CONTRACT NO.:	A1364-A
DRAWING NUMBER:	E-118

Autodesk Docs://90388-000_Rye_Lake_Filtration/90388-000-WFP-E.rvt
4/15/2025 3:06:42 PM

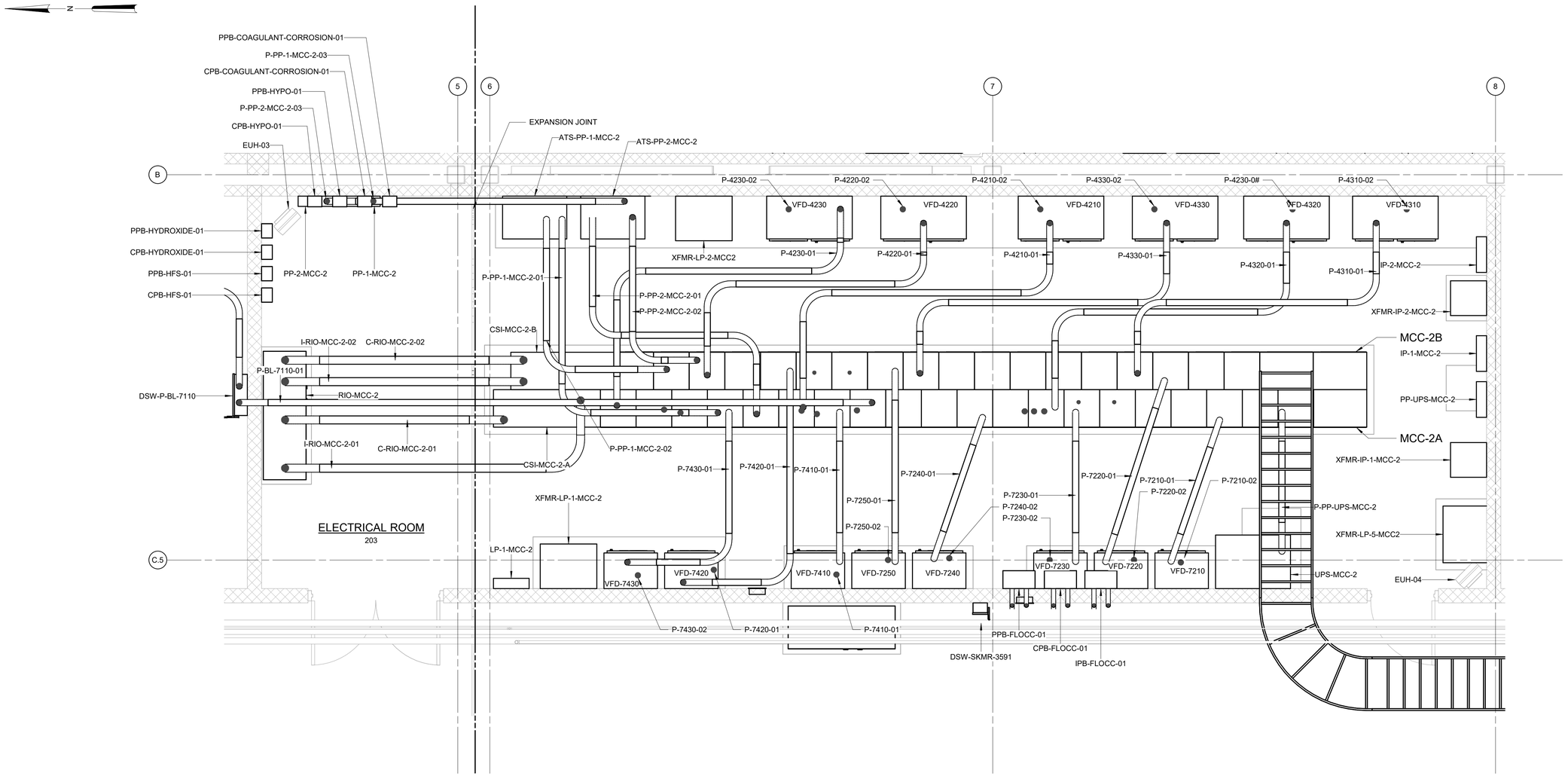

NOTES:

1. CONDUITS UNDER 2" ARE NOT SHOWN ON THIS DRAWING.
2. REFER TO THE CONDUIT AND CABLE SCHEDULE FOR ALL CONDUITS AND CONDUIT TAGGING.
3. CONDUITS SHALL BE SUPPORTED FROM THE CEILING OR WALLS OF THE ROOMS/AREAS THEY ARE LOCATED IN. SUPPORT SYSTEM SHALL BE DESIGNED BY THE CONTRACTOR AS PER SPECIFICATION SECTION 26 05 29.

ENLARGED ELEC RM PLAN - EL 421.00

3/8" = 1'-0"

WARNING
IT IS A VIOLATION OF SECTION 7209.2 OF THE NEW YORK STATE EDUCATION LAW FOR ANY PERSON, UNLESS ACTING UNDER THE DIRECTION OF A LICENSED PROFESSIONAL ENGINEER, TO ALTER IN ANY WAY PLANS, SPECIFICATIONS, PLATS OR REPORTS TO WHICH THE SEAL OF A PROFESSIONAL ENGINEER HAS BEEN APPLIED. IF AN ITEM BEARING THE SEAL OF A PROFESSIONAL ENGINEER IS ALTERED, THE ALTERING ENGINEER SHALL AFFIX TO THE ITEM HIS SEAL AND THE NOTATION "ALTERED BY" FOLLOWED BY HIS SIGNATURE, THE DATE, AND A SPECIFIC DESCRIPTION OF THE ALTERATION.

3/8" = 1'-0" 12" 0 1 2 4'

REV	ISSUED FOR	DATE	BY

PROJECT ENGINEER:	R. FROST
DESIGNED BY:	Y. ABDALLA
DRAWN BY:	R. CHUNG
CHECKED BY:	G. MARKOU

IF THIS BAR DOES NOT MEASURE 1" THEN DRAWING IS NOT TO FULL SCALE 0 1/2" 1"

BID SET

STATE OF NEW YORK · GEORGE MARKOU · 072603 · LICENSED PROFESSIONAL ENGINEER

Hazen
HAZEN AND SAWYER
498 SEVENTH AVENUE, 11th FLOOR
NEW YORK, NEW YORK 10018

WESTCHESTER JOINT WATER WORKS
MAMARONECK, NY

RYE LAKE WATER FILTRATION PLANT
HARRISON, NY

FILTRATION PLANT
ELECTRICAL
ENLARGED ELECTRICAL ROOM - EL 421.00

DATE:	FEB 2025
HAZEN NO.:	90388-000
CONTRACT NO.:	A1364-A
DRAWING NUMBER:	E-119

Autodesk Docs://90388-000_Rye_Lake_Filtration/90388-000-WFP-E.rvt
4/15/2025 3:06:43 PM

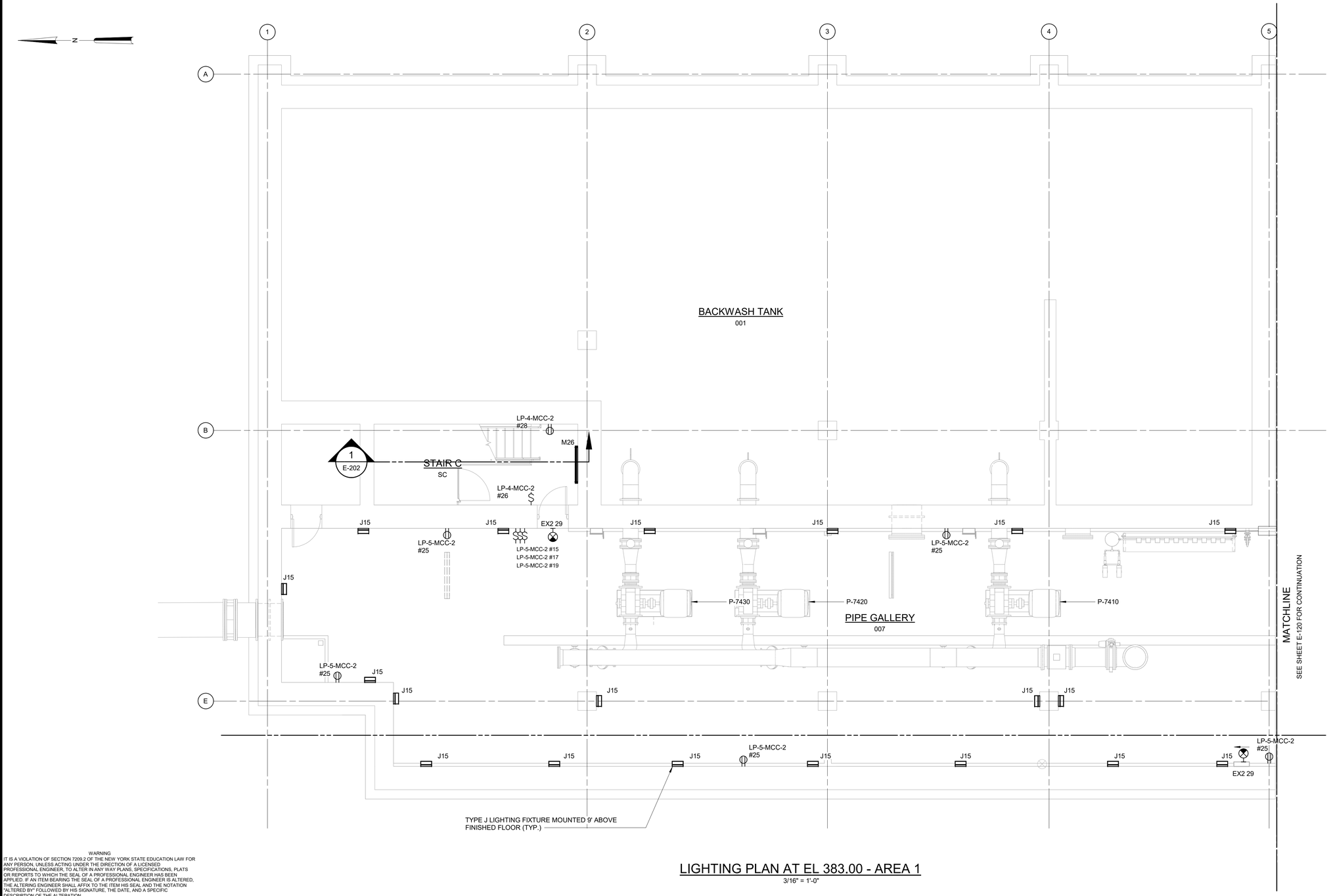

LIGHTING PLAN AT EL 383.00 - AREA 1

3/16" = 1'-0"

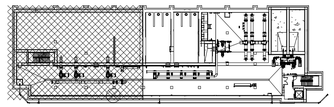

NOTES:

1. REFER TO SPECIFICATION 26 50 00 FOR LIGHTING FIXTURE SCHEDULE.
2. REFER TO DRAWINGS E-012 TO E-017 FOR PANELBOARD SCHEDULES.
3. EXIT SIGNS AND LIGHT FIXTURES IN PIPE GALLERY SHALL BE POWERED FROM LP-5-MCC-2.
4. LIGHT FIXTURES IN STAIR C SHALL BE POWERED FROM LP-4-MCC-2.

WARNING
IT IS A VIOLATION OF SECTION 7209.2 OF THE NEW YORK STATE EDUCATION LAW FOR ANY PERSON, UNLESS ACTING UNDER THE DIRECTION OF A LICENSED PROFESSIONAL ENGINEER, TO ALTER IN ANY WAY PLANS, SPECIFICATIONS, PLATS OR REPORTS TO WHICH THE SEAL OF A PROFESSIONAL ENGINEER HAS BEEN APPLIED. IF AN ITEM BEARING THE SEAL OF A PROFESSIONAL ENGINEER IS ALTERED, THE ALTERING ENGINEER SHALL AFFIX TO THE ITEM HIS SEAL AND THE NOTATION "ALTERED BY" FOLLOWED BY HIS SIGNATURE, THE DATE, AND A SPECIFIC DESCRIPTION OF THE ALTERATION.

REV	ISSUED FOR	DATE	BY

PROJECT ENGINEER:	R. FROST
DESIGNED BY:	Y. ABDALLA
DRAWN BY:	P. NUGENT
CHECKED BY:	G. MARKOU
IF THIS BAR DOES NOT MEASURE 1" THEN DRAWING IS NOT TO FULL SCALE	0 1/2" 1"

BID SET



Hazen
HAZEN AND SAWYER
498 SEVENTH AVENUE, 11th FLOOR
NEW YORK, NEW YORK 10018

WESTCHESTER JOINT WATER WORKS
MAMARONECK, NY

RYE LAKE WATER FILTRATION PLANT
HARRISON, NY

FILTRATION PLANT
ELECTRICAL
LIGHTING PLAN - EL 383.00 - AREA 1

DATE:	FEB 2025
HAZEN NO.:	90388-000
CONTRACT NO.:	A1364-A
DRAWING NUMBER:	E-120

Autodesk Docs://90388-000_Rye_Lake_Filtration/90388-000-WFP-E.rvt
4/15/2025 3:06:45 PM

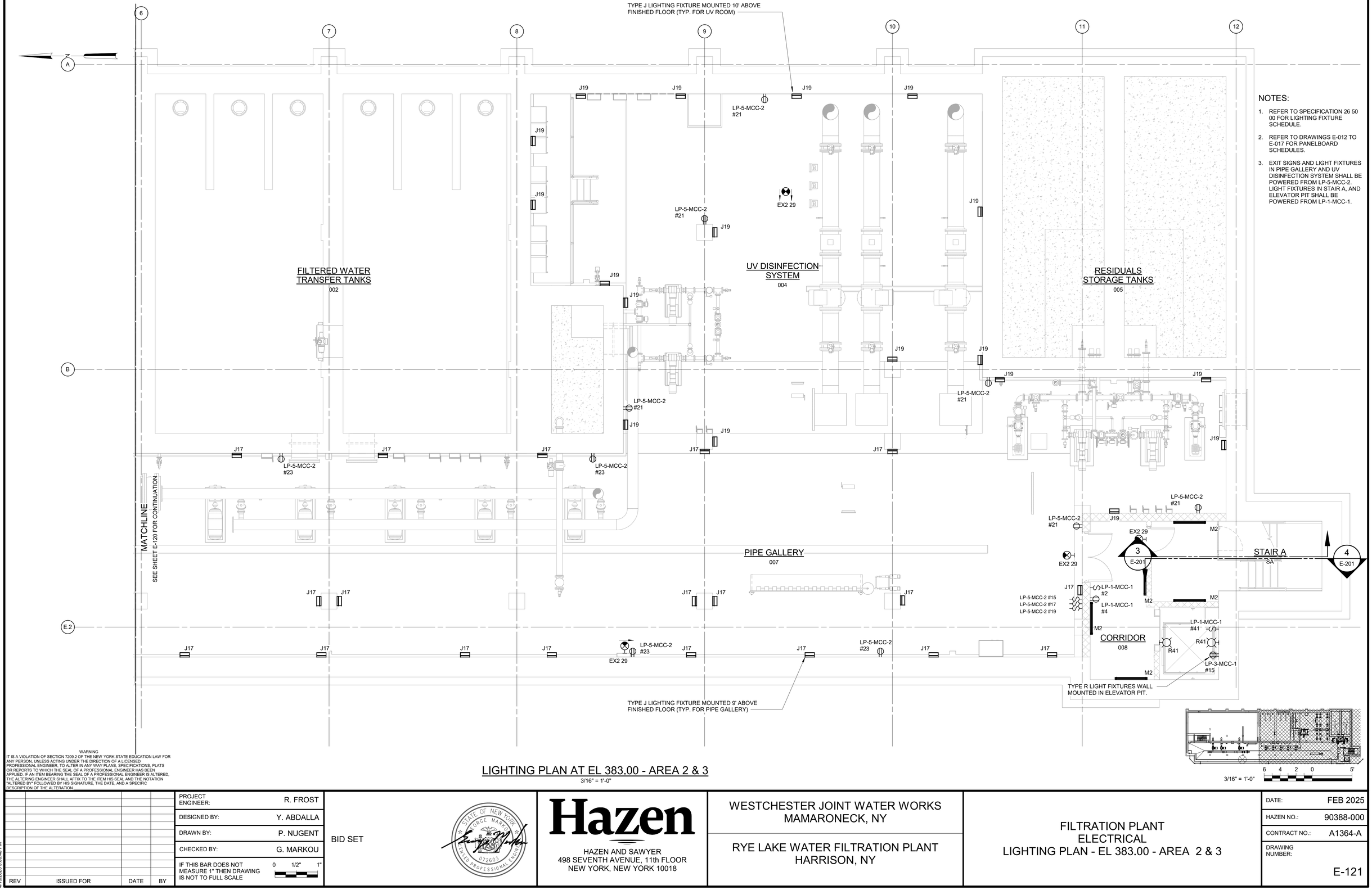

LIGHTING PLAN AT EL 383.00 - AREA 2 & 3

3/16" = 1'-0"

3/16" = 1'-0"

NOTES:

1. REFER TO SPECIFICATION 26 50 00 FOR LIGHTING FIXTURE SCHEDULE.
2. REFER TO DRAWINGS E-012 TO E-017 FOR PANELBOARD SCHEDULES.
3. EXIT SIGNS AND LIGHT FIXTURES IN PIPE GALLERY AND UV DISINFECTION SYSTEM SHALL BE POWERED FROM LP-5-MCC-2. LIGHT FIXTURES IN STAIR A, AND ELEVATOR PIT SHALL BE POWERED FROM LP-1-MCC-1.

WARNING
IT IS A VIOLATION OF SECTION 7209.2 OF THE NEW YORK STATE EDUCATION LAW FOR ANY PERSON, UNLESS ACTING UNDER THE DIRECTION OF A LICENSED PROFESSIONAL ENGINEER, TO ALTER IN ANY WAY PLANS, SPECIFICATIONS, PLATS OR REPORTS TO WHICH THE SEAL OF A PROFESSIONAL ENGINEER HAS BEEN APPLIED. IF AN ITEM BEARING THE SEAL OF A PROFESSIONAL ENGINEER IS ALTERED, THE ALTERING ENGINEER SHALL AFFIX TO THE ITEM HIS SEAL AND THE NOTATION "ALTERED BY" FOLLOWED BY HIS SIGNATURE, THE DATE, AND A SPECIFIC DESCRIPTION OF THE ALTERATION.

REV	ISSUED FOR	DATE	BY

PROJECT ENGINEER:	R. FROST
DESIGNED BY:	Y. ABDALLA
DRAWN BY:	P. NUGENT
CHECKED BY:	G. MARKOU
IF THIS BAR DOES NOT MEASURE 1" THEN DRAWING IS NOT TO FULL SCALE	0 1/2" 1"

BID SET

STATE OF NEW YORK — GEORGE MARKOU — 022603 — LICENSED PROFESSIONAL ENGINEER

Hazen
HAZEN AND SAWYER
498 SEVENTH AVENUE, 11th FLOOR
NEW YORK, NEW YORK 10018

WESTCHESTER JOINT WATER WORKS
MAMARONECK, NY

RYE LAKE WATER FILTRATION PLANT
HARRISON, NY

FILTRATION PLANT
ELECTRICAL
LIGHTING PLAN - EL 383.00 - AREA 2 & 3

DATE:	FEB 2025
HAZEN NO.:	90388-000
CONTRACT NO.:	A1364-A
DRAWING NUMBER:	E-121

Autodesk Docs://90388-000_Rye_Lake_Filtration/90388-000-WFP-E.rvt
4/15/2025 3:06:48 PM

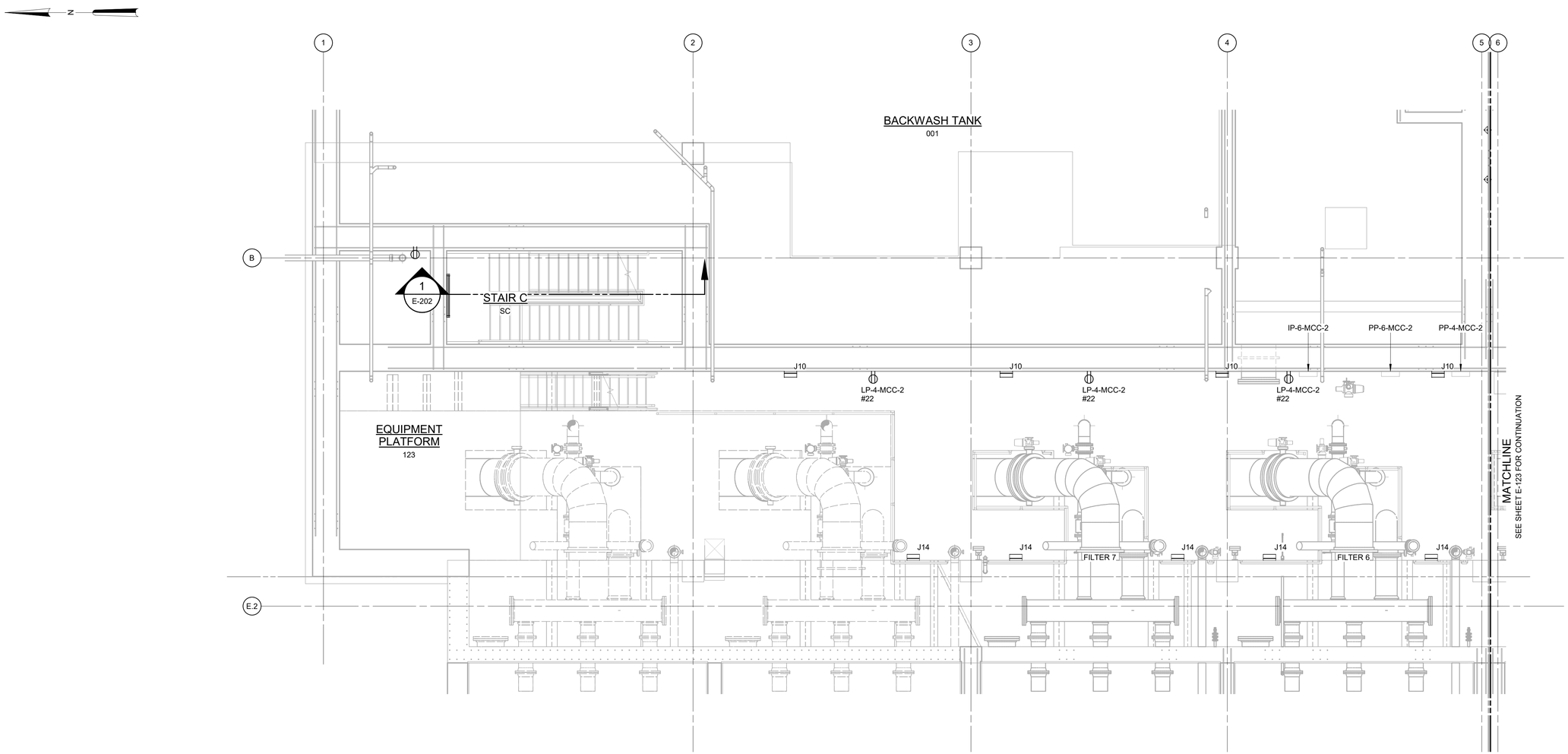

LIGHTING PLAN - EL 398.00 - AREA 1

3/16" = 1'-0"

NOTES:

1. CONDUITS UNDER 2" ARE NOT SHOWN ON THIS DRAWING.
2. REFER TO DRAWINGS E-012 TO E-017 FOR PANELBOARD SCHEDULES.
3. CONDUIT SHALL BE SUPPORTED FROM THE CEILING OR WALLS OF THE ROOMS/AREAS THEY ARE LOCATED IN. SUPPORT SYSTEM SHALL BE DESIGNED BY THE CONTRACTOR AS PER SPECIFICATION SECTION 26 05 29.
4. ALL "J" LIGHT FIXTURES SHALL BE MOUNTED 8'-6" AFF.

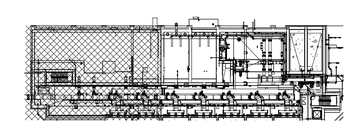

3/16" = 1'-0" 6 4 2 0 5'

WARNING
IT IS A VIOLATION OF SECTION 7209.2 OF THE NEW YORK STATE EDUCATION LAW FOR ANY PERSON, UNLESS ACTING UNDER THE DIRECTION OF A LICENSED PROFESSIONAL ENGINEER, TO ALTER IN ANY WAY PLANS, SPECIFICATIONS, PLATS OR REPORTS TO WHICH THE SEAL OF A PROFESSIONAL ENGINEER HAS BEEN APPLIED. IF AN ITEM BEARING THE SEAL OF A PROFESSIONAL ENGINEER IS ALTERED, THE ALTERING ENGINEER SHALL AFFIX TO THE ITEM HIS SEAL AND THE NOTATION "ALTERED BY" FOLLOWED BY HIS SIGNATURE, THE DATE, AND A SPECIFIC DESCRIPTION OF THE ALTERATION.

REV	ISSUED FOR	DATE	BY

PROJECT ENGINEER:	R. FROST
DESIGNED BY:	Y. ABDALLA
DRAWN BY:	P. NUGENT
CHECKED BY:	G. MARKOU
IF THIS BAR DOES NOT MEASURE 1" THEN DRAWING IS NOT TO FULL SCALE	0 1/2" 1"

BID SET

STATE OF NEW YORK GEORGE MARKOU 072603 LICENSED PROFESSIONAL ENGINEER

Hazen

HAZEN AND SAWYER
498 SEVENTH AVENUE, 11th FLOOR
NEW YORK, NEW YORK 10018

WESTCHESTER JOINT WATER WORKS
MAMARONECK, NY

RYE LAKE WATER FILTRATION PLANT
HARRISON, NY

FILTRATION PLANT
ELECTRICAL
LIGHTING PLAN - EL 398.00 - AREA 1

DATE:	FEB 2025
HAZEN NO.:	90388-000
CONTRACT NO.:	A1364-A
DRAWING NUMBER:	E-122

Autodesk Docs://90388-000_Rye_Lake_Filtration/90388-000-WFP-E.rvt
4/15/2025 3:06:51 PM

NOTES:

1. CONDUITS UNDER 2" ARE NOT SHOWN ON THIS DRAWING.
2. REFER TO DRAWINGS E-012 TO E-017 FOR PANELBOARD SCHEDULES.
3. CONDUIT SHALL BE SUPPORTED FROM THE CEILING OR WALLS OF THE ROOMS/AREAS THEY ARE LOCATED IN. SUPPORT SYSTEM SHALL BE DESIGNED BY THE CONTRACTOR AS PER SPECIFICATION SECTION 26 05 29.
4. ALL "J" LIGHT FIXTURES SHALL BE MOUNTED 8'-6" AFF.

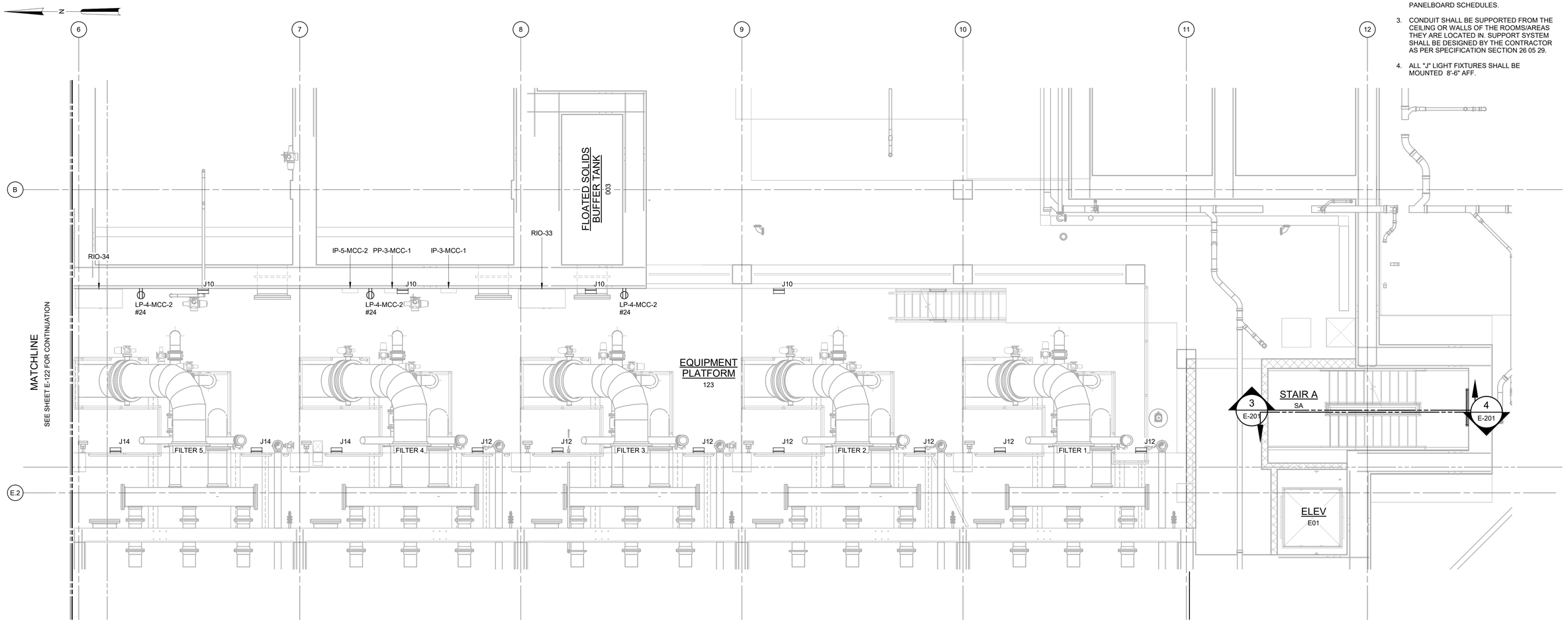

LIGHTING PLAN - EL 398.00 - AREA 2 & 3

3/16" = 1'-0"

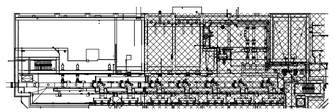

3/16" = 1'-0" 6 4 2 0 5'

WARNING
IT IS A VIOLATION OF SECTION 7209.2 OF THE NEW YORK STATE EDUCATION LAW FOR ANY PERSON, UNLESS ACTING UNDER THE DIRECTION OF A LICENSED PROFESSIONAL ENGINEER, TO ALTER IN ANY WAY PLANS, SPECIFICATIONS, PLATS OR REPORTS TO WHICH THE SEAL OF A PROFESSIONAL ENGINEER HAS BEEN APPLIED. IF AN ITEM BEARING THE SEAL OF A PROFESSIONAL ENGINEER IS ALTERED, THE ALTERING ENGINEER SHALL AFFIX TO THE ITEM HIS SEAL AND THE NOTATION "ALTERED BY" FOLLOWED BY HIS SIGNATURE, THE DATE, AND A SPECIFIC DESCRIPTION OF THE ALTERATION.

REV	ISSUED FOR	DATE	BY

PROJECT ENGINEER:	R. FROST
DESIGNED BY:	Y. ABDALLA
DRAWN BY:	P. NUGENT
CHECKED BY:	G. MARKOU

IF THIS BAR DOES NOT MEASURE 1" THEN DRAWING IS NOT TO FULL SCALE 0 1/2" 1"

BID SET

STATE OF NEW YORK · GEORGE MARKOU · 072603 · LICENSED PROFESSIONAL ENGINEER

Hazen

HAZEN AND SAWYER
498 SEVENTH AVENUE, 11th FLOOR
NEW YORK, NEW YORK 10018

WESTCHESTER JOINT WATER WORKS
MAMARONECK, NY

RYE LAKE WATER FILTRATION PLANT
HARRISON, NY

FILTRATION PLANT
ELECTRICAL
LIGHTING PLAN - EL 398.00 - AREA 2 & 3

DATE:	FEB 2025
HAZEN NO.:	90388-000
CONTRACT NO.:	A1364-A
DRAWING NUMBER:	E-123

Autodesk Docs://90388-000_Rye_Lake_Filtration/90388-000-WFP-E.rvt
4/15/2025 3:06:54 PM

TYPE B LIGHT FIXTURE MOUNTED 12' ABOVE GROUND (TYP. FOR BUILDING EXTERIOR)

TYPE O LIGHT FIXTURE CEILING MOUNTED (TYP. FOR CORROSION INHIBITOR ROOM)

TYPE J LIGHT FIXTURE MOUNTED 12' ABOVE FINISHED FLOOR (TYP. FOR EL 407.00)

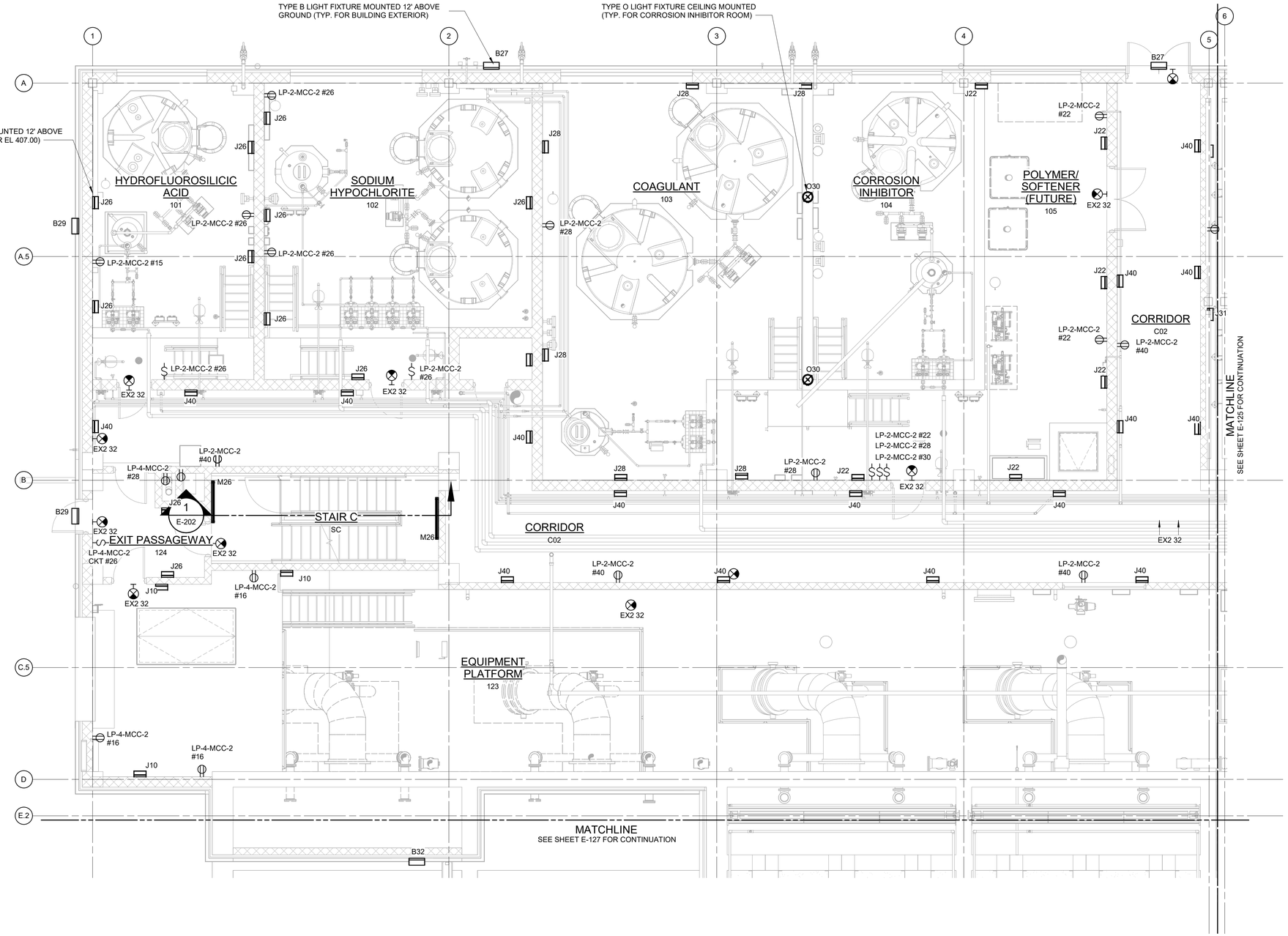

NOTES:

1. REFER TO SPECIFICATION 26 50 00 FOR LIGHTING FIXTURE SCHEDULE.
2. REFER TO DRAWINGS E-012 TO E-017 FOR PANELBOARD SCHEDULES.
3. LIGHT FIXTURES IN STAIR C, VESTIBULE, EQUIPMENT PLATFORM, AND BUILDING EXTERIOR SHALL BE POWERED FROM LP-4-MCC-2. EXIT SIGNS, AND ALL OTHER LIGHTING SHALL BE POWERED FROM LP-2-MCC-2.

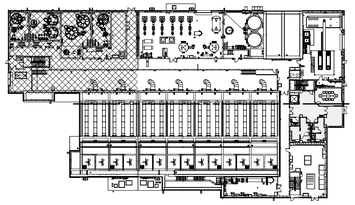

3/16" = 1'-0"

LIGHTING PLAN AT EL 407.00 - AREA 1

3/16" = 1'-0"

WARNING
IT IS A VIOLATION OF SECTION 7209.2 OF THE NEW YORK STATE EDUCATION LAW FOR ANY PERSON, UNLESS ACTING UNDER THE DIRECTION OF A LICENSED PROFESSIONAL ENGINEER, TO ALTER IN ANY WAY PLANS, SPECIFICATIONS, PLATS OR REPORTS TO WHICH THE SEAL OF A PROFESSIONAL ENGINEER HAS BEEN APPLIED. IF AN ITEM BEARING THE SEAL OF A PROFESSIONAL ENGINEER IS ALTERED, THE ALTERING ENGINEER SHALL AFFIX TO THE ITEM HIS SEAL AND THE NOTATION "ALTERED BY" FOLLOWED BY HIS SIGNATURE, THE DATE, AND A SPECIFIC DESCRIPTION OF THE ALTERATION.

REV	ISSUED FOR	DATE	BY

PROJECT ENGINEER:	R. FROST
DESIGNED BY:	Y. ABDALLA
DRAWN BY:	P. NUGENT
CHECKED BY:	G. MARKOU

IF THIS BAR DOES NOT MEASURE 1" THEN DRAWING IS NOT TO FULL SCALE 0 1/2" 1"

BID SET

STATE OF NEW YORK · GEORGE MARKOU · 022603 · LICENSED PROFESSIONAL ENGINEER

Hazen
HAZEN AND SAWYER
498 SEVENTH AVENUE, 11th FLOOR
NEW YORK, NEW YORK 10018

WESTCHESTER JOINT WATER WORKS
MAMARONECK, NY

RYE LAKE WATER FILTRATION PLANT
HARRISON, NY

FILTRATION PLANT
ELECTRICAL
LIGHTING PLAN - EL 407.00 - AREA 1

DATE:	FEB 2025
HAZEN NO.:	90388-000
CONTRACT NO.:	A1364-A
DRAWING NUMBER:	E-124

Autodesk Docs://90388-000_Rye_Lake_Filtration/90388-000-WFP-E.rvt
4/15/2025 3:07:02 PM

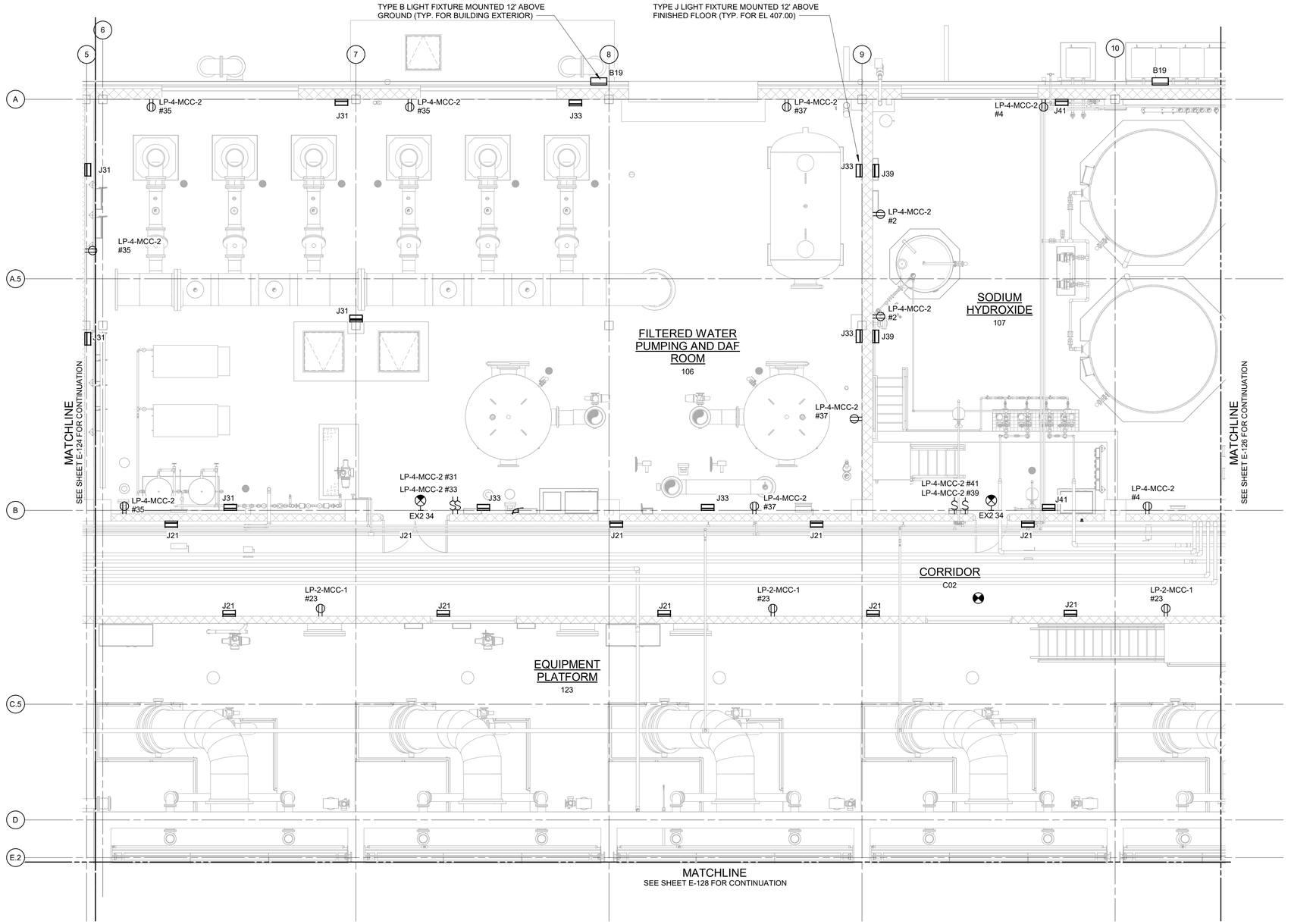

NOTES:

1. REFER TO SPECIFICATION 26 50 00 FOR LIGHTING FIXTURE SCHEDULE.
2. REFER TO DRAWINGS E-012 TO E-017 FOR PANELBOARD SCHEDULES.
3. LIGHT FIXTURES IN CORRIDOR (C02) AND BUILDING EXTERIOR SHALL BE POWERED FROM LP-2-MCC-1. EXIT SIGNS, AND ALL OTHER LIGHT FIXTURES SHALL BE POWERED FROM LP-4-MCC-2.

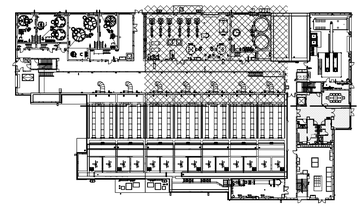

6 4 2 0 5'

3/16" = 1'-0"

LIGHTING PLAN AT EL 407.00 - AREA 2

3/16" = 1'-0"

WARNING
IT IS A VIOLATION OF SECTION 7209.2 OF THE NEW YORK STATE EDUCATION LAW FOR ANY PERSON, UNLESS ACTING UNDER THE DIRECTION OF A LICENSED PROFESSIONAL ENGINEER, TO ALTER IN ANY WAY PLANS, SPECIFICATIONS, PLATS OR REPORTS TO WHICH THE SEAL OF A PROFESSIONAL ENGINEER HAS BEEN APPLIED. IF AN ITEM BEARING THE SEAL OF A PROFESSIONAL ENGINEER IS ALTERED, THE ALTERING ENGINEER SHALL AFFIX TO THE ITEM HIS SEAL AND THE NOTATION "ALTERED BY" FOLLOWED BY HIS SIGNATURE, THE DATE, AND A SPECIFIC DESCRIPTION OF THE ALTERATION.

REV	ISSUED FOR	DATE	BY

PROJECT ENGINEER:	R. FROST
DESIGNED BY:	Y. ABDALLA
DRAWN BY:	P. NUGENT
CHECKED BY:	G. MARKOU

IF THIS BAR DOES NOT MEASURE 1" THEN DRAWING IS NOT TO FULL SCALE — 0 1/2" 1"

BID SET

STATE OF NEW YORK — GEORGE MARKOU — 072603 — LICENSED PROFESSIONAL ENGINEER

Hazen
HAZEN AND SAWYER
498 SEVENTH AVENUE, 11th FLOOR
NEW YORK, NEW YORK 10018

WESTCHESTER JOINT WATER WORKS
MAMARONECK, NY

RYE LAKE WATER FILTRATION PLANT
HARRISON, NY

FILTRATION PLANT
ELECTRICAL
LIGHTING PLAN - EL 407.00 - AREA 2

DATE:	FEB 2025
HAZEN NO.:	90388-000
CONTRACT NO.:	A1364-A
DRAWING NUMBER:	E-125

Autodesk Docs://90388-000_Rye_Lake_Filtration/90388-000-WFP-E.rvt
4/15/2025 3:07:09 PM

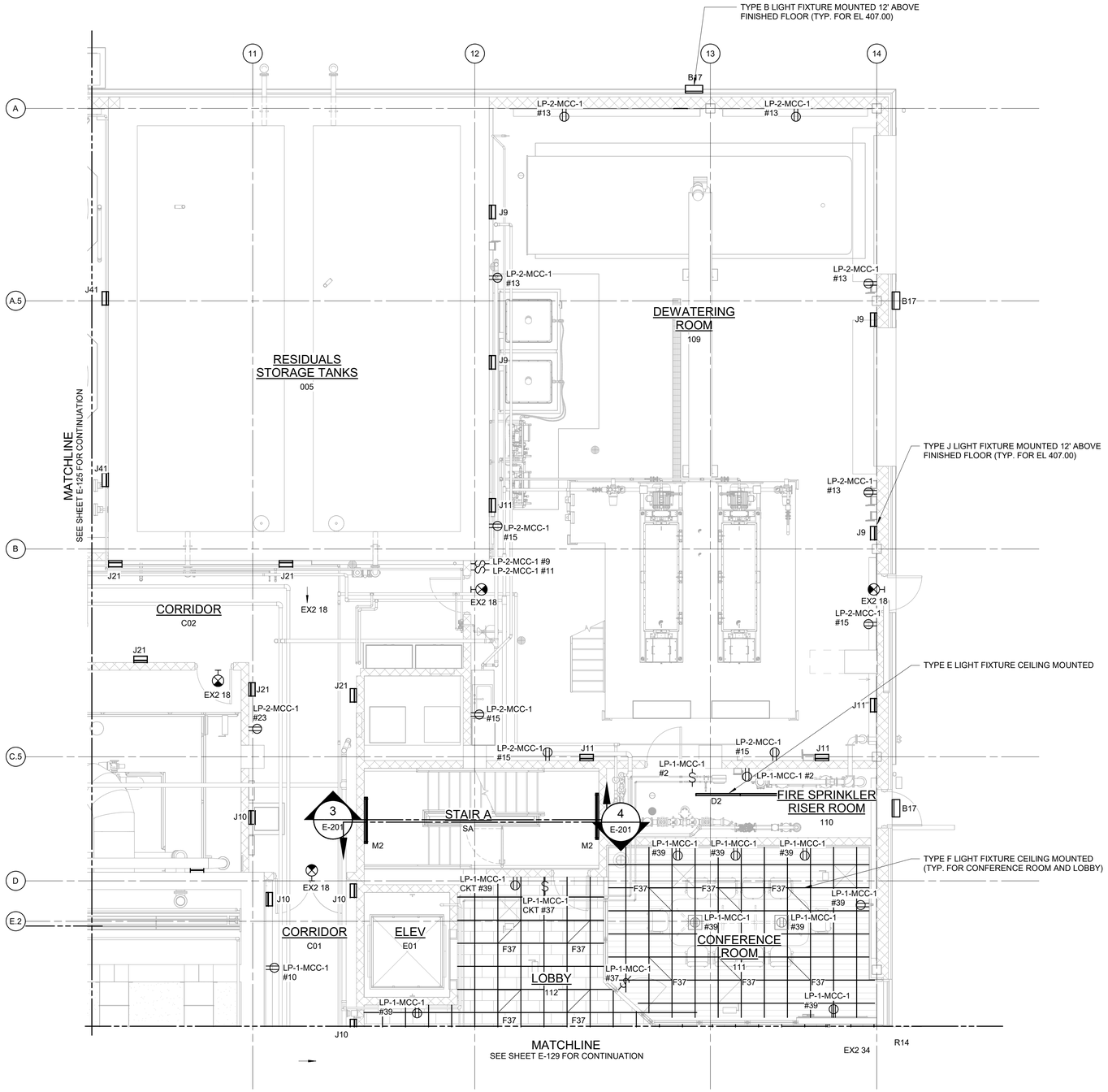

LIGHTING PLAN AT EL 407.00 - AREA 3

3/16" = 1'-0"

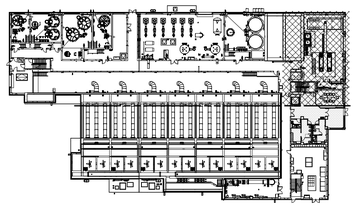

3/16" = 1'-0"

NOTES:

1. REFER TO SPECIFICATION 26 50 00 FOR LIGHTING FIXTURE SCHEDULE.
2. REFER TO DRAWINGS E-012 TO E-017 FOR PANELBOARD SCHEDULES.
3. LIGHT FIXTURES IN CORRIDOR (C02), DEWATERING ROOM, EXIT SIGNS, AND BUILDING EXTERIOR SHALL BE POWERED FROM LP-2-MCC-1. LIGHT FIXTURES IN CONFERENCE ROOM, LOBBY, CORRIDOR (C01), AND STAIR A SHALL BE POWERED FROM LP-1-MCC-1; LIGHT FIXTURES IN SODIUM HYDROXIDE ROOM SHALL BE POWERED FROM LP-4-MCC-2.

WARNING
IT IS A VIOLATION OF SECTION 7209.2 OF THE NEW YORK STATE EDUCATION LAW FOR ANY PERSON, UNLESS ACTING UNDER THE DIRECTION OF A LICENSED PROFESSIONAL ENGINEER, TO ALTER IN ANY WAY PLANS, SPECIFICATIONS, PLATS OR REPORTS TO WHICH THE SEAL OF A PROFESSIONAL ENGINEER HAS BEEN APPLIED. IF AN ITEM BEARING THE SEAL OF A PROFESSIONAL ENGINEER IS ALTERED, THE ALTERING ENGINEER SHALL AFFIX TO THE ITEM HIS SEAL AND THE NOTATION "ALTERED BY" FOLLOWED BY HIS SIGNATURE, THE DATE, AND A SPECIFIC DESCRIPTION OF THE ALTERATION.

REV	ISSUED FOR	DATE	BY

PROJECT ENGINEER:	R. FROST
DESIGNED BY:	Y. ABDALLA
DRAWN BY:	P. NUGENT
CHECKED BY:	G. MARKOU
IF THIS BAR DOES NOT MEASURE 1" THEN DRAWING IS NOT TO FULL SCALE	0 1/2" 1"

BID SET

STATE OF NEW YORK · GEORGE MARKOU · 072603 · LICENSED PROFESSIONAL ENGINEER

Hazen

HAZEN AND SAWYER
498 SEVENTH AVENUE, 11th FLOOR
NEW YORK, NEW YORK 10018

WESTCHESTER JOINT WATER WORKS
MAMARONECK, NY

RYE LAKE WATER FILTRATION PLANT
HARRISON, NY

FILTRATION PLANT
ELECTRICAL
LIGHTING PLAN - EL 407.00 - AREA 3

DATE:	FEB 2025
HAZEN NO.:	90388-000
CONTRACT NO.:	A1364-A
DRAWING NUMBER:	E-126

Autodesk Docs://90388-000_Rye_Lake_Filtration/90388-000-WFP-E.rvt
4/15/2025 3:07:17 PM

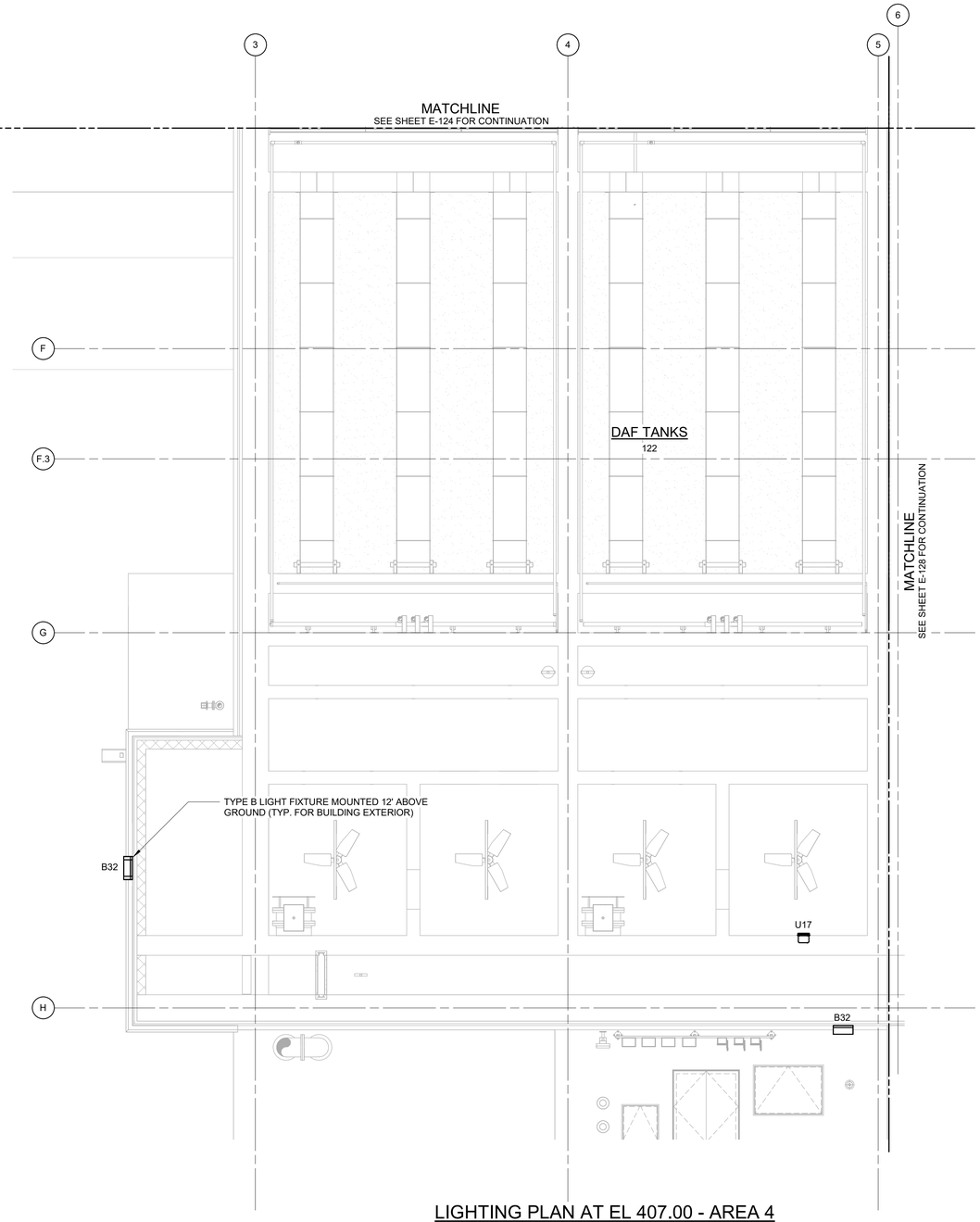

LIGHTING PLAN AT EL 407.00 - AREA 4

3/16" = 1'-0"

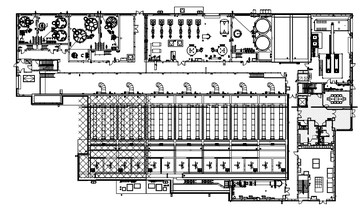

3/16" = 1'-0"

NOTES:

1. REFER TO SPECIFICATION 26 50 00 FOR LIGHTING FIXTURE SCHEDULE.
2. REFER TO DRAWINGS E-012 TO E-017 FOR PANELBOARD SCHEDULES.
3. LIGHTING FIXTURES ON BUILDING EXTERIOR SHALL BE POWERED FROM LP-4-MCC-2

WARNING
IT IS A VIOLATION OF SECTION 7209.2 OF THE NEW YORK STATE EDUCATION LAW FOR ANY PERSON, UNLESS ACTING UNDER THE DIRECTION OF A LICENSED PROFESSIONAL ENGINEER, TO ALTER IN ANY WAY PLANS, SPECIFICATIONS, PLATS OR REPORTS TO WHICH THE SEAL OF A PROFESSIONAL ENGINEER HAS BEEN APPLIED. IF AN ITEM BEARING THE SEAL OF A PROFESSIONAL ENGINEER IS ALTERED, THE ALTERING ENGINEER SHALL AFFIX TO THE ITEM HIS SEAL AND THE NOTATION "ALTERED BY" FOLLOWED BY HIS SIGNATURE, THE DATE, AND A SPECIFIC DESCRIPTION OF THE ALTERATION.

REV	ISSUED FOR	DATE	BY

PROJECT ENGINEER:	R. FROST
DESIGNED BY:	Y. ABDALLA
DRAWN BY:	P. NUGENT
CHECKED BY:	G. MARKOU
IF THIS BAR DOES NOT MEASURE 1" THEN DRAWING IS NOT TO FULL SCALE	0 1/2" 1"

BID SET

STATE OF NEW YORK — GEORGE MARKOU — 072603 — LICENSED PROFESSIONAL ENGINEER

Hazen

HAZEN AND SAWYER
498 SEVENTH AVENUE, 11th FLOOR
NEW YORK, NEW YORK 10018

WESTCHESTER JOINT WATER WORKS
MAMARONECK, NY

RYE LAKE WATER FILTRATION PLANT
HARRISON, NY

FILTRATION PLANT
ELECTRICAL
LIGHTING PLAN - EL 407.00 - AREA 4

DATE:	FEB 2025
HAZEN NO.:	90388-000
CONTRACT NO.:	A1364-A
DRAWING NUMBER:	E-127

Autodesk Docs://90388-000_Rye_Lake_Filtration/90388-000-WFP-E.rvt
4/15/2025 3:07:23 PM

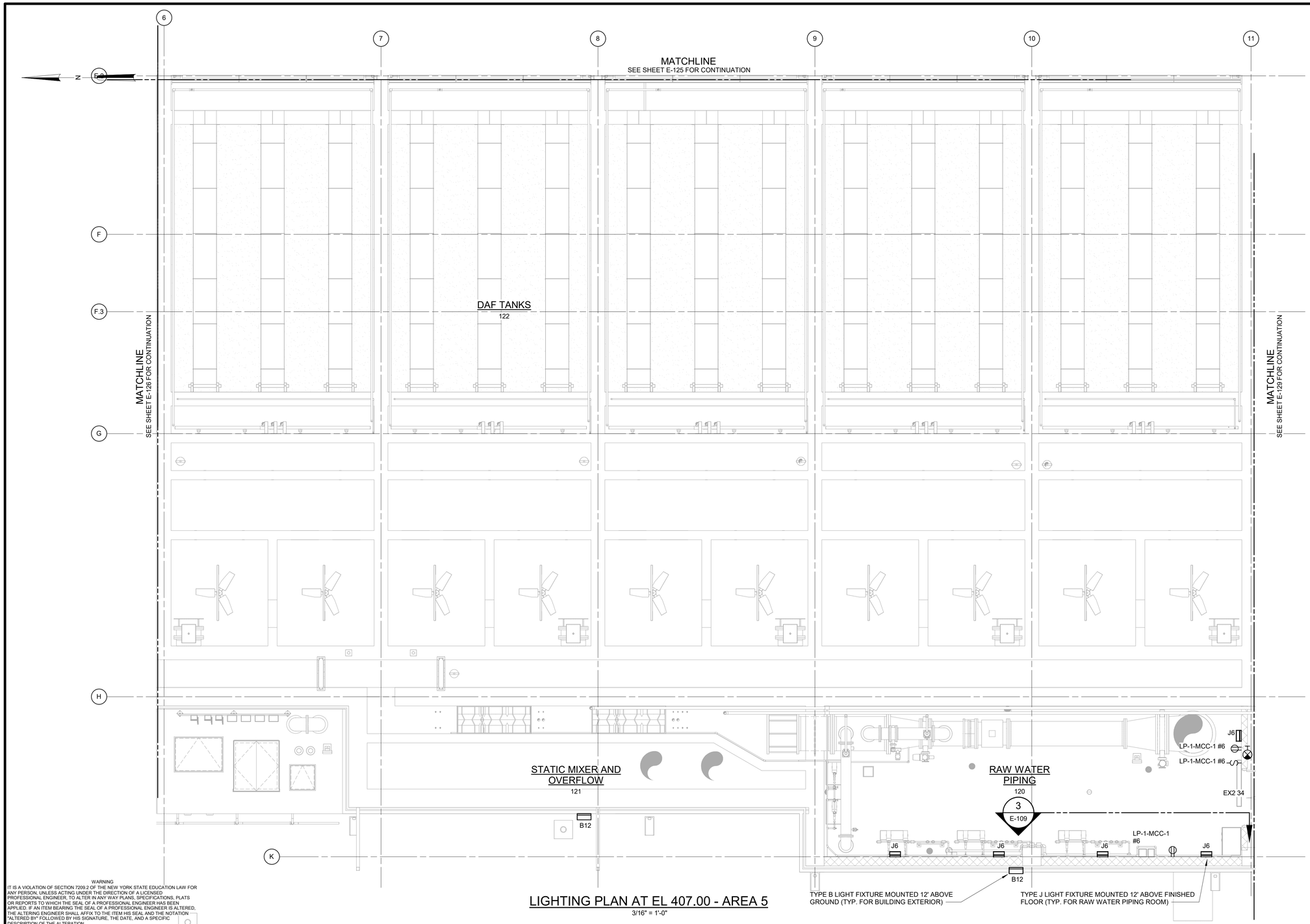

LIGHTING PLAN AT EL 407.00 - AREA 5

3/16" = 1'-0"

NOTES:

1. REFER TO SPECIFICATION 26 50 00 FOR LIGHTING FIXTURE SCHEDULE.
2. REFER TO DRAWINGS E-012 TO E-017 FOR PANELBOARD SCHEDULES.
3. EXIT SIGNS AND LIGHT FIXTURES IN RAW WATER PIPING ROOM AND BUILDING EXTERIOR SHALL BE POWERED FROM LP-1-MCC-1.

WARNING
IT IS A VIOLATION OF SECTION 7209.2 OF THE NEW YORK STATE EDUCATION LAW FOR ANY PERSON, UNLESS ACTING UNDER THE DIRECTION OF A LICENSED PROFESSIONAL ENGINEER, TO ALTER IN ANY WAY PLANS, SPECIFICATIONS, PLATS OR REPORTS TO WHICH THE SEAL OF A PROFESSIONAL ENGINEER HAS BEEN APPLIED. IF AN ITEM BEARING THE SEAL OF A PROFESSIONAL ENGINEER IS ALTERED, THE ALTERING ENGINEER SHALL AFFIX TO THE ITEM HIS SEAL AND THE NOTATION "ALTERED BY" FOLLOWED BY HIS SIGNATURE, THE DATE, AND A SPECIFIC DESCRIPTION OF THE ALTERATION.

REV	ISSUED FOR	DATE	BY

PROJECT ENGINEER:	R. FROST
DESIGNED BY:	Y. ABDALLA
DRAWN BY:	P. NUGENT
CHECKED BY:	G. MARKOU

IF THIS BAR DOES NOT MEASURE 1" THEN DRAWING IS NOT TO FULL SCALE 0 1/2" 1"

BID SET

STATE OF NEW YORK · GEORGE MARKOU · 072603 · LICENSED PROFESSIONAL ENGINEER

Hazen
HAZEN AND SAWYER
498 SEVENTH AVENUE, 11th FLOOR
NEW YORK, NEW YORK 10018

WESTCHESTER JOINT WATER WORKS
MAMARONECK, NY

RYE LAKE WATER FILTRATION PLANT
HARRISON, NY

FILTRATION PLANT
ELECTRICAL
LIGHTING PLAN - EL 407.00 - AREA 5

3/16" = 1'-0"

FEB 2025

HAZEN NO.:	90388-000
CONTRACT NO.:	A1364-A
DRAWING NUMBER:	E-128

Autodesk Docs://90388-000_Rye_Lake_Filtration/90388-000-WFP-E.rvt
4/15/2025 3:07:30 PM

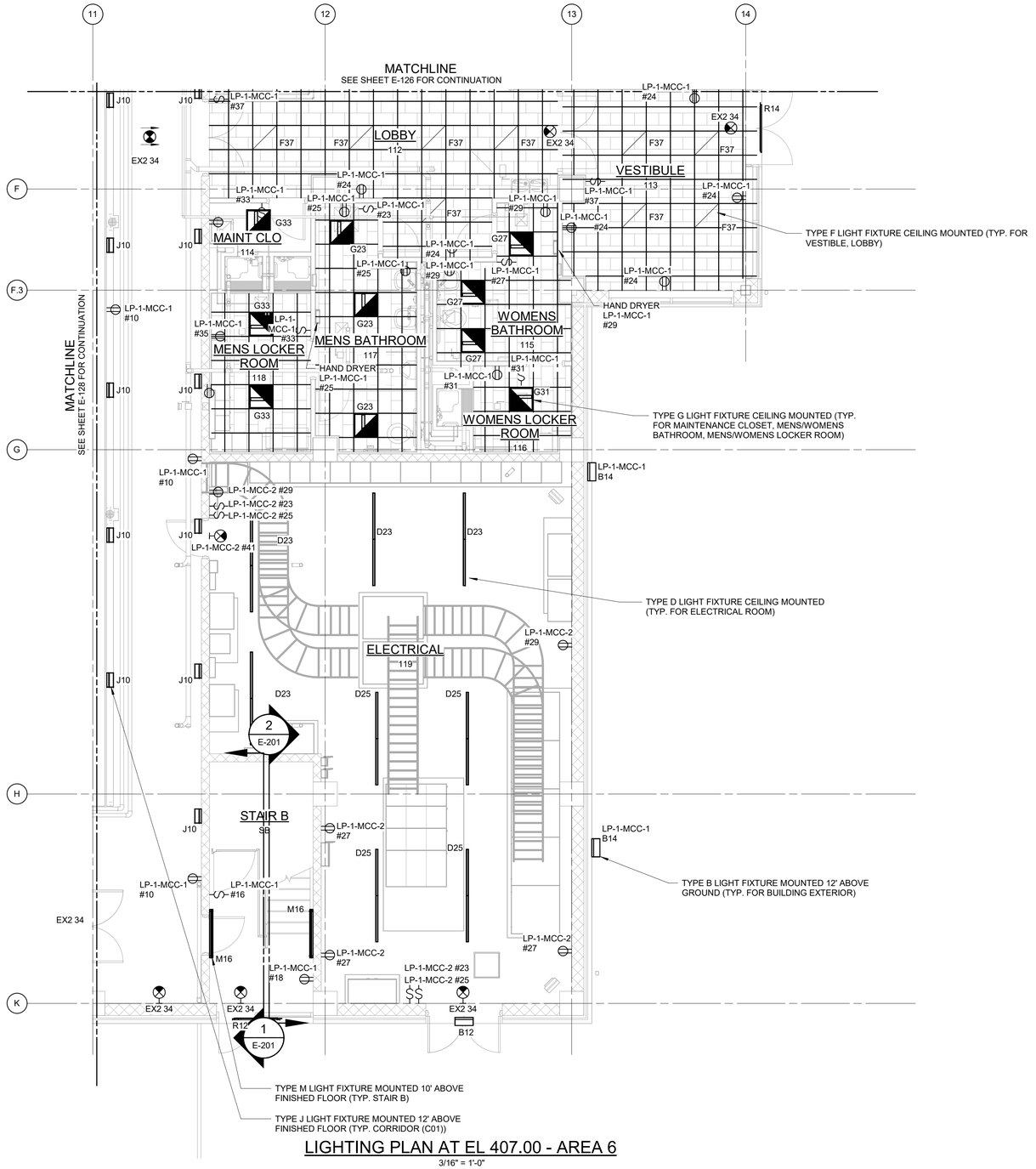

LIGHTING PLAN AT EL 407.00 - AREA 6

3/16" = 1'-0"

NOTES:

1. REFER TO SPECIFICATION 26 50 00 FOR LIGHTING FIXTURE SCHEDULE.
2. REFER TO DRAWINGS E-012 TO E-017 FOR PANELBOARD SCHEDULES.
3. LIGHT FIXTURES IN ELECTRICAL ROOM SHALL BE POWERED FROM LP-1-MCC-2. EXIT SIGNS AND ALL OTHER LIGHT FIXTURES SHALL BE POWERED FROM LP-1-MCC-1.

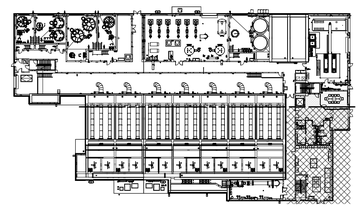

3/16" = 1'-0"

WARNING
IT IS A VIOLATION OF SECTION 7209.2 OF THE NEW YORK STATE EDUCATION LAW FOR ANY PERSON, UNLESS ACTING UNDER THE DIRECTION OF A LICENSED PROFESSIONAL ENGINEER, TO ALTER IN ANY WAY PLANS, SPECIFICATIONS, PLATS OR REPORTS TO WHICH THE SEAL OF A PROFESSIONAL ENGINEER HAS BEEN APPLIED. IF AN ITEM BEARING THE SEAL OF A PROFESSIONAL ENGINEER IS ALTERED, THE ALTERING ENGINEER SHALL AFFIX TO THE ITEM HIS SEAL AND THE NOTATION "ALTERED BY" FOLLOWED BY HIS SIGNATURE, THE DATE, AND A SPECIFIC DESCRIPTION OF THE ALTERATION.

REV	ISSUED FOR	DATE	BY

PROJECT ENGINEER:	R. FROST
DESIGNED BY:	Y. ABDALLA
DRAWN BY:	P. NUGENT
CHECKED BY:	G. MARKOU
IF THIS BAR DOES NOT MEASURE 1" THEN DRAWING IS NOT TO FULL SCALE	0 1/2" 1"

BID SET

STATE OF NEW YORK — GEORGE MARKOU — 072603 — LICENSED PROFESSIONAL ENGINEER

Hazen

HAZEN AND SAWYER
498 SEVENTH AVENUE, 11th FLOOR
NEW YORK, NEW YORK 10018

WESTCHESTER JOINT WATER WORKS
MAMARONECK, NY

RYE LAKE WATER FILTRATION PLANT
HARRISON, NY

FILTRATION PLANT
ELECTRICAL
LIGHTING PLAN - EL 407.00 - AREA 6

DATE:	FEB 2025
HAZEN NO.:	90388-000
CONTRACT NO.:	A1364-A
DRAWING NUMBER:	E-129

Autodesk Docs://90388-000_Rye_Lake_Filtration/90388-000-WFP-E.rvt
4/15/2025 3:07:36 PM

NOTES:

1. REFER TO SPECIFICATION 26 50 00 FOR LIGHTING FIXTURE SCHEDULE.
2. REFER TO DRAWINGS E-012 TO E-017 FOR PANELBOARD SCHEDULES.
3. LIGHT FIXTURES IN CORRIDOR (C03), STORAGE ROOM, HVAC (201) ROOM, AIR SCOUR ROOM, EXIT SIGNS, AND ELECTRICAL ROOM SHALL BE POWERED FROM LP-1-MCC-2. LIGHT FIXTURES IN STAIR C SHALL BE POWERED FROM LP-4-MCC-2. LIGHT FIXTURES IN DAF TANKS ROOM SHALL BE POWERED FROM LP-1-MCC-1.

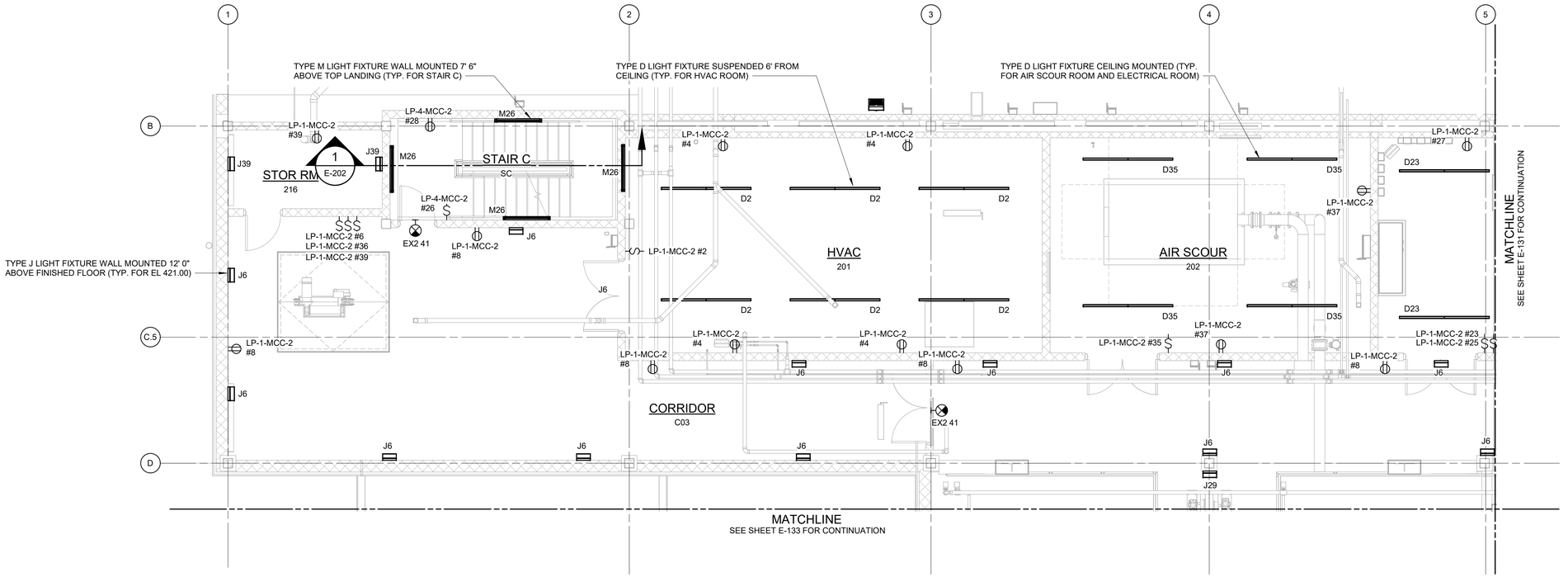

LIGHTING PLAN AT EL 421.00 - AREA 1

3/16" = 1'-0"

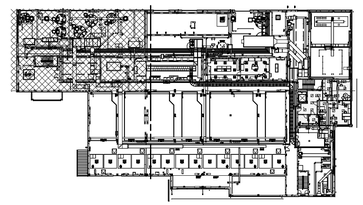

WARNING
IT IS A VIOLATION OF SECTION 7209.2 OF THE NEW YORK STATE EDUCATION LAW FOR ANY PERSON, UNLESS ACTING UNDER THE DIRECTION OF A LICENSED PROFESSIONAL ENGINEER, TO ALTER IN ANY WAY PLANS, SPECIFICATIONS, PLATS OR REPORTS TO WHICH THE SEAL OF A PROFESSIONAL ENGINEER HAS BEEN APPLIED. IF AN ITEM BEARING THE SEAL OF A PROFESSIONAL ENGINEER IS ALTERED, THE ALTERING ENGINEER SHALL AFFIX TO THE ITEM HIS SEAL AND THE NOTATION "ALTERED BY" FOLLOWED BY HIS SIGNATURE, THE DATE, AND A SPECIFIC DESCRIPTION OF THE ALTERATION.

REV	ISSUED FOR	DATE	BY

PROJECT ENGINEER:	R. FROST
DESIGNED BY:	Y. ABDALLA
DRAWN BY:	P. NUGENT
CHECKED BY:	G. MARKOU
IF THIS BAR DOES NOT MEASURE 1" THEN DRAWING IS NOT TO FULL SCALE	0 1/2" 1"

BID SET

STATE OF NEW YORK · GEORGE MARKOU · 072603 · LICENSED PROFESSIONAL ENGINEER

Hazen
HAZEN AND SAWYER
498 SEVENTH AVENUE, 11th FLOOR
NEW YORK, NEW YORK 10018

WESTCHESTER JOINT WATER WORKS
MAMARONECK, NY

RYE LAKE WATER FILTRATION PLANT
HARRISON, NY

FILTRATION PLANT
ELECTRICAL
LIGHTING PLAN - EL 421.00 - AREA 1

DATE:	FEB 2025
HAZEN NO.:	90388-000
CONTRACT NO.:	A1364-A
DRAWING NUMBER:	E-130

Autodesk Docs://90388-000_Rye_Lake_Filtration/90388-000-WFP-E.rvt
4/15/2025 3:07:41 PM

N

NOTES:

1. REFER TO SPECIFICATION 26 50 00 FOR LIGHTING FIXTURE SCHEDULE.
2. REFER TO DRAWINGS E-012 TO E-017 FOR PANELBOARD SCHEDULES.
3. LIGHT FIXTURES IN ELECTRICAL ROOM, PROCESS ANALYSIS ROOM, AND CORRIDOR (C03) SHALL BE POWERED FROM LP-1-MCC-2. LIGHT FIXTURES IN CONTROL ROOM SHALL BE POWERED FROM LP-3-MCC-1. LIGHT FIXUTRES IN DAF TANKS ROOM SHALL BE POWERED FROM LP-1-MCC-1.

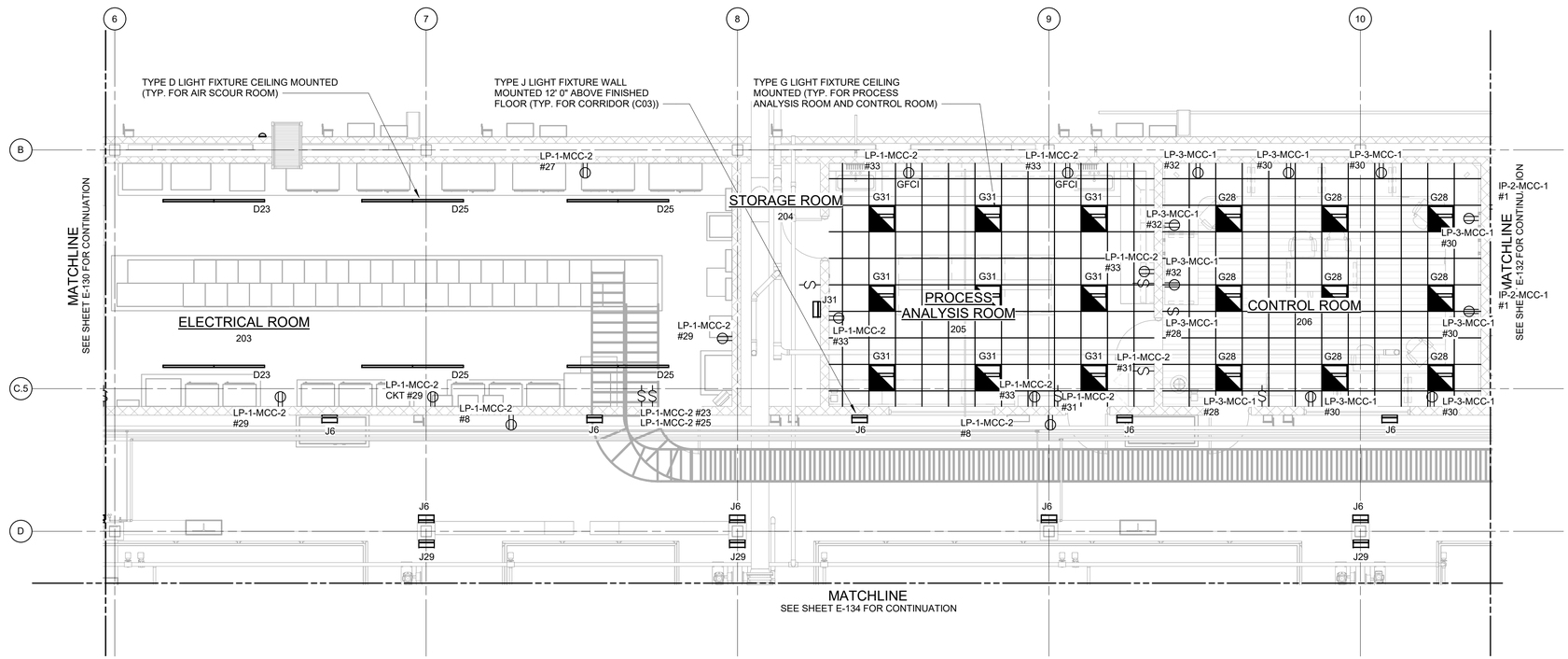

LIGHTING PLAN AT EL 421.00 - AREA 2

3/16" = 1'-0"

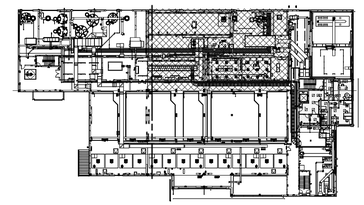

3/16" = 1'-0"

WARNING
IT IS A VIOLATION OF SECTION 7209.2 OF THE NEW YORK STATE EDUCATION LAW FOR ANY PERSON, UNLESS ACTING UNDER THE DIRECTION OF A LICENSED PROFESSIONAL ENGINEER, TO ALTER IN ANY WAY PLANS, SPECIFICATIONS, PLATS OR REPORTS TO WHICH THE SEAL OF A PROFESSIONAL ENGINEER HAS BEEN APPLIED. IF AN ITEM BEARING THE SEAL OF A PROFESSIONAL ENGINEER IS ALTERED, THE ALTERING ENGINEER SHALL AFFIX TO THE ITEM HIS SEAL AND THE NOTATION "ALTERED BY" FOLLOWED BY HIS SIGNATURE, THE DATE, AND A SPECIFIC DESCRIPTION OF THE ALTERATION.

REV	ISSUED FOR	DATE	BY

PROJECT ENGINEER:	R. FROST
DESIGNED BY:	Y. ABDALLA
DRAWN BY:	P. NUGENT
CHECKED BY:	G. MARKOU

IF THIS BAR DOES NOT MEASURE 1" THEN DRAWING IS NOT TO FULL SCALE 0 1/2" 1"

BID SET

STATE OF NEW YORK · GEORGE MARKOU · 072603 · LICENSED PROFESSIONAL ENGINEER

Hazen

HAZEN AND SAWYER
498 SEVENTH AVENUE, 11th FLOOR
NEW YORK, NEW YORK 10018

WESTCHESTER JOINT WATER WORKS
MAMARONECK, NY

RYE LAKE WATER FILTRATION PLANT
HARRISON, NY

FILTRATION PLANT
ELECTRICAL
LIGHTING PLAN - EL 421.00 - AREA 2

DATE:	FEB 2025
HAZEN NO.:	90388-000
CONTRACT NO.:	A1364-A
DRAWING NUMBER:	E-131

Autodesk Docs://90388-000_Rye_Lake_Filtration/90388-000-WFP-E.rvt
4/15/2025 3:07:46 PM

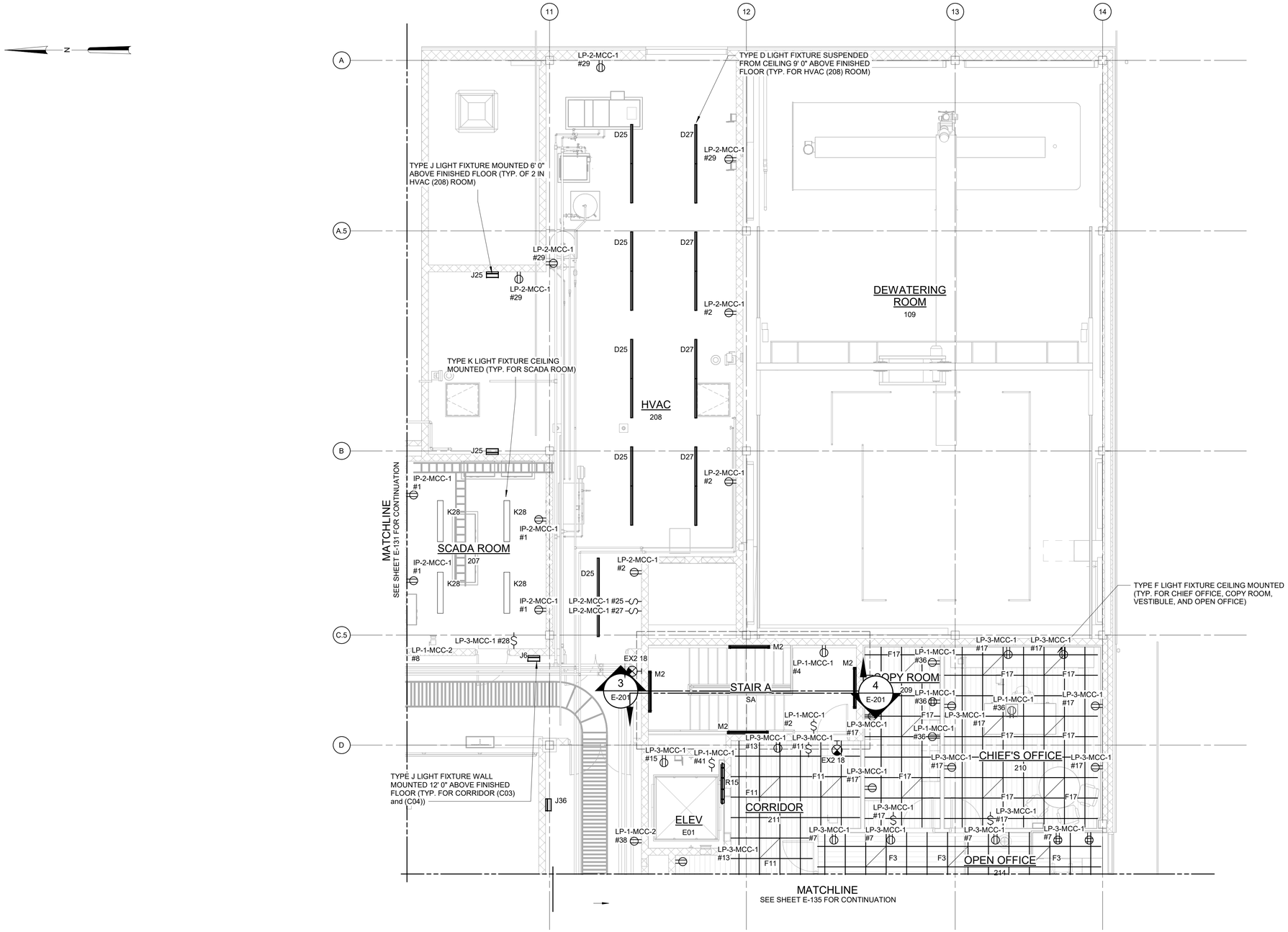

LIGHTING PLAN AT EL 421.00 - AREA 3

3/16" = 1'-0"

NOTES:

1. REFER TO SPECIFICATION 26 50 00 FOR LIGHTING FIXTURE SCHEDULE.
2. REFER TO DRAWINGS E-012 TO E-017 FOR PANELBOARD SCHEDULES.
3. LIGHT FIXTURES IN SCADA ROOM, CHIEF'S OFFICE, VESTIBULE, OPEN OFFICE, AND ELEVATOR SHAFT SHALL BE POWERED FROM LP-3-MCC-1. EXIT SIGNS AND LIGHT FIXTURES IN HVAC ROOM (208) SHALL BE POWERED FROM LP-2-MCC-1. LIGHT FIXTURES IN CORRIDORS (C03) AND (C04) SHALL BE POWERED FROM LP-1-MCC-2. LIGHT FIXTURES IN STAIR A SHALL BE POWERED FROM LP-1-MCC-1.

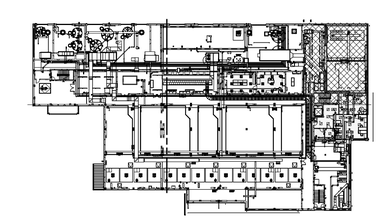

3/16" = 1'-0"

WARNING
IT IS A VIOLATION OF SECTION 7209.2 OF THE NEW YORK STATE EDUCATION LAW FOR ANY PERSON, UNLESS ACTING UNDER THE DIRECTION OF A LICENSED PROFESSIONAL ENGINEER, TO ALTER IN ANY WAY PLANS, SPECIFICATIONS, PLATS OR REPORTS TO WHICH THE SEAL OF A PROFESSIONAL ENGINEER HAS BEEN APPLIED. IF AN ITEM BEARING THE SEAL OF A PROFESSIONAL ENGINEER IS ALTERED, THE ALTERING ENGINEER SHALL AFFIX TO THE ITEM HIS SEAL AND THE NOTATION "ALTERED BY" FOLLOWED BY HIS SIGNATURE, THE DATE, AND A SPECIFIC DESCRIPTION OF THE ALTERATION.

REV	ISSUED FOR	DATE	BY

PROJECT ENGINEER:	R. FROST
DESIGNED BY:	Y. ABDALLA
DRAWN BY:	P. NUGENT
CHECKED BY:	G. MARKOU
IF THIS BAR DOES NOT MEASURE 1" THEN DRAWING IS NOT TO FULL SCALE	0 1/2" 1"

BID SET

STATE OF NEW YORK GEORGE MARKOU 072603 LICENSED PROFESSIONAL ENGINEER

Hazen

HAZEN AND SAWYER
498 SEVENTH AVENUE, 11th FLOOR
NEW YORK, NEW YORK 10018

WESTCHESTER JOINT WATER WORKS
MAMARONECK, NY

RYE LAKE WATER FILTRATION PLANT
HARRISON, NY

FILTRATION PLANT
ELECTRICAL
LIGHTING PLAN - EL 421.00 - AREA 3

DATE:	FEB 2025
HAZEN NO.:	90388-000
CONTRACT NO.:	A1364-A
DRAWING NUMBER:	E-132

Autodesk Docs://90388-000_Rye_Lake_Filtration/90388-000-WFP-E.rvt
4/15/2025 3:07:50 PM

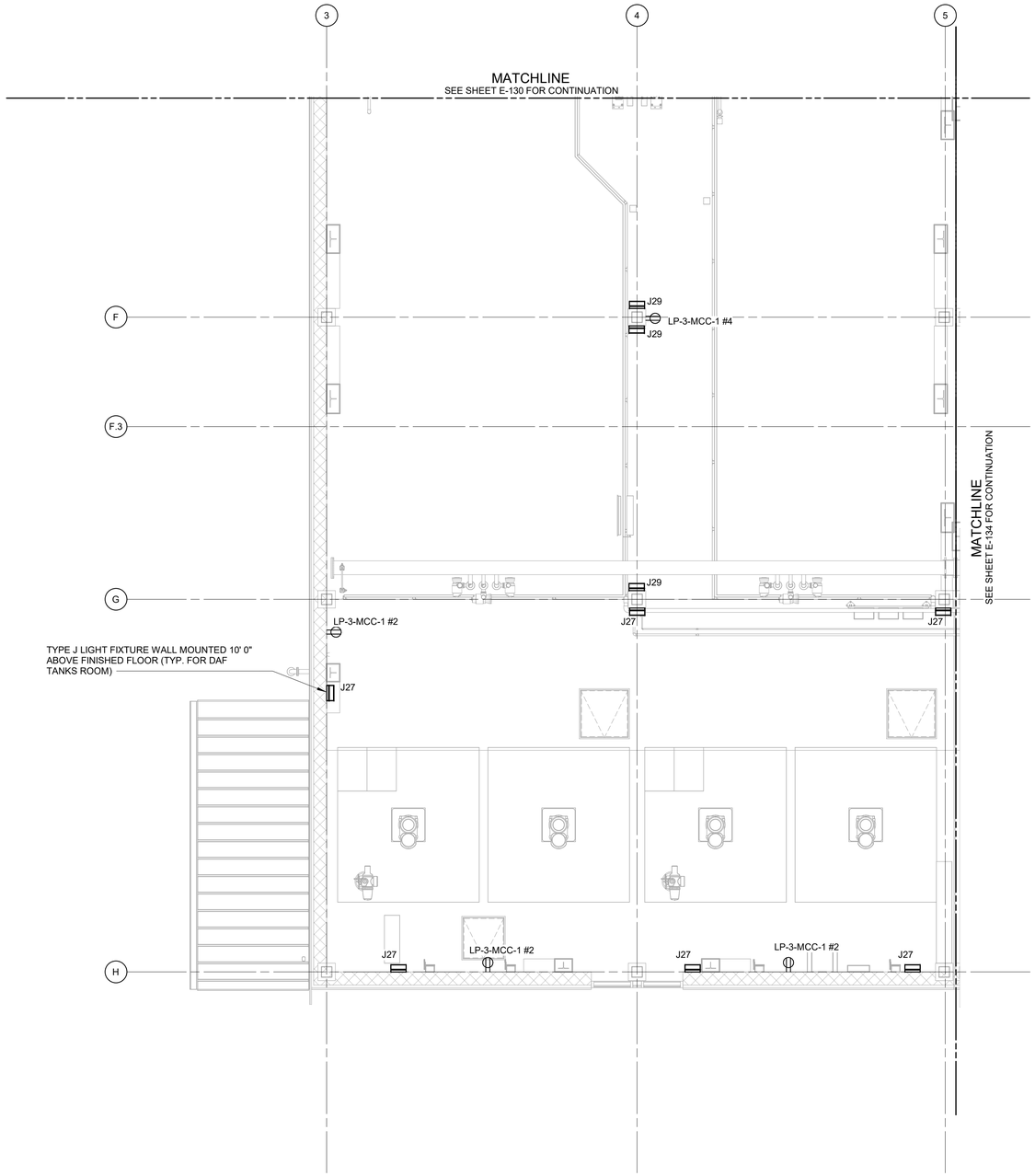

LIGHTING PLAN AT EL 421.00 - AREA 4

3/16" = 1'-0"

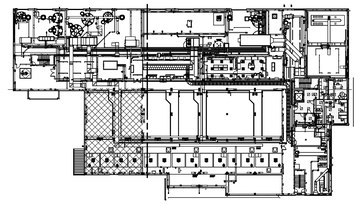

3/16" = 1'-0"

6 4 2 0 5'

NOTES:

1. REFER TO SPECIFICATION 26 50 00 FOR LIGHTING FIXTURE SCHEDULE.
2. REFER TO DRAWINGS E-012 TO E-017 FOR PANELBOARD SCHEDULES.
3. LIGHT FIXTURES IN DAF TANKS ROOM SHALL BE POWERED FROM LP-3-MCC-1.

WARNING
IT IS A VIOLATION OF SECTION 7209.2 OF THE NEW YORK STATE EDUCATION LAW FOR ANY PERSON, UNLESS ACTING UNDER THE DIRECTION OF A LICENSED PROFESSIONAL ENGINEER, TO ALTER IN ANY WAY PLANS, SPECIFICATIONS, PLATS OR REPORTS TO WHICH THE SEAL OF A PROFESSIONAL ENGINEER HAS BEEN APPLIED. IF AN ITEM BEARING THE SEAL OF A PROFESSIONAL ENGINEER IS ALTERED, THE ALTERING ENGINEER SHALL AFFIX TO THE ITEM HIS SEAL AND THE NOTATION "ALTERED BY" FOLLOWED BY HIS SIGNATURE, THE DATE, AND A SPECIFIC DESCRIPTION OF THE ALTERATION.

REV	ISSUED FOR	DATE	BY

PROJECT ENGINEER:	R. FROST
DESIGNED BY:	Y. ABDALLA
DRAWN BY:	P. NUGENT
CHECKED BY:	G. MARKOU

IF THIS BAR DOES NOT MEASURE 1" THEN DRAWING IS NOT TO FULL SCALE 0 1/2" 1"

BID SET

STATE OF NEW YORK GEORGE MARKOU 072603 LICENSED PROFESSIONAL ENGINEER

Hazen
HAZEN AND SAWYER
498 SEVENTH AVENUE, 11th FLOOR
NEW YORK, NEW YORK 10018

WESTCHESTER JOINT WATER WORKS
MAMARONECK, NY

RYE LAKE WATER FILTRATION PLANT
HARRISON, NY

FILTRATION PLANT
ELECTRICAL
LIGHTING PLAN - EL 421.00 - AREA 4

DATE:	FEB 2025
HAZEN NO.:	90388-000
CONTRACT NO.:	A1364-A
DRAWING NUMBER:	E-133

Autodesk Docs://90388-000_Rye_Lake_Filtration/90388-000-WFP-E.rvt
4/15/2025 3:07:55 PM

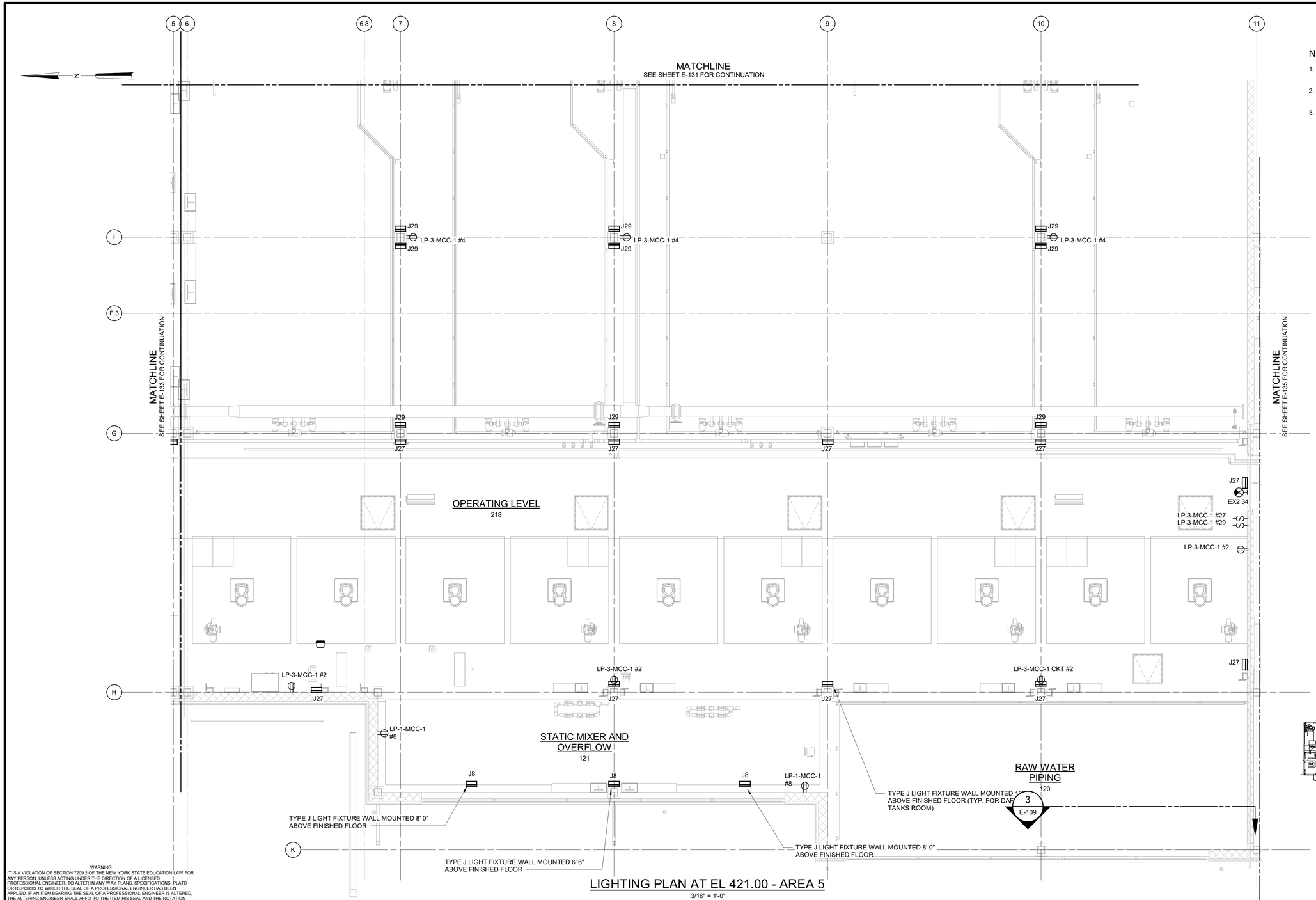

LIGHTING PLAN AT EL 421.00 - AREA 5

3/16" = 1'-0"

NOTES:

1. REFER TO SPECIFICATION 26 50 00 FOR LIGHTING FIXTURE SCHEDULE.
2. REFER TO DRAWINGS E-012 TO E-017 FOR PANELBOARD SCHEDULES.
3. LIGHT FIXTURES IN DAF TANKS ROOM SHALL BE POWERED FROM LP-3-MCC-1. LIGHT FIXTURES IN STATIC MIXER AND OVERFLOW ROOM SHALL BE POWERED FROM LP-1-MCC-1.

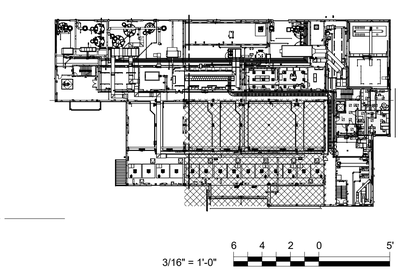

WARNING
IT IS A VIOLATION OF SECTION 7209.2 OF THE NEW YORK STATE EDUCATION LAW FOR ANY PERSON, UNLESS ACTING UNDER THE DIRECTION OF A LICENSED PROFESSIONAL ENGINEER, TO ALTER IN ANY WAY PLANS, SPECIFICATIONS, PLATS OR REPORTS TO WHICH THE SEAL OF A PROFESSIONAL ENGINEER HAS BEEN APPLIED. IF AN ITEM BEARING THE SEAL OF A PROFESSIONAL ENGINEER IS ALTERED, THE ALTERING ENGINEER SHALL AFFIX TO THE ITEM HIS SEAL AND THE NOTATION "ALTERED BY" FOLLOWED BY HIS SIGNATURE, THE DATE, AND A SPECIFIC DESCRIPTION OF THE ALTERATION.

REV	ISSUED FOR	DATE	BY

PROJECT ENGINEER:	R. FROST
DESIGNED BY:	Y. ABDALLA
DRAWN BY:	P. NUGENT
CHECKED BY:	G. MARKOU
IF THIS BAR DOES NOT MEASURE 1" THEN DRAWING IS NOT TO FULL SCALE	0 1/2" 1"

BID SET

STATE OF NEW YORK
GEORGE MARKOU
072603
LICENSED PROFESSIONAL ENGINEER

Hazen

HAZEN AND SAWYER
498 SEVENTH AVENUE, 11th FLOOR
NEW YORK, NEW YORK 10018

WESTCHESTER JOINT WATER WORKS
MAMARONECK, NY

RYE LAKE WATER FILTRATION PLANT
HARRISON, NY

FILTRATION PLANT
ELECTRICAL
LIGHTING PLAN - EL 421.00 - AREA 5

DATE:	FEB 2025
HAZEN NO.:	90388-000
CONTRACT NO.:	A1364-A
DRAWING NUMBER:	E-134

Autodesk Docs://90388-000_Rye_Lake_Filtration/90388-000-WFP-E.rvt
4/15/2025 3:08:00 PM

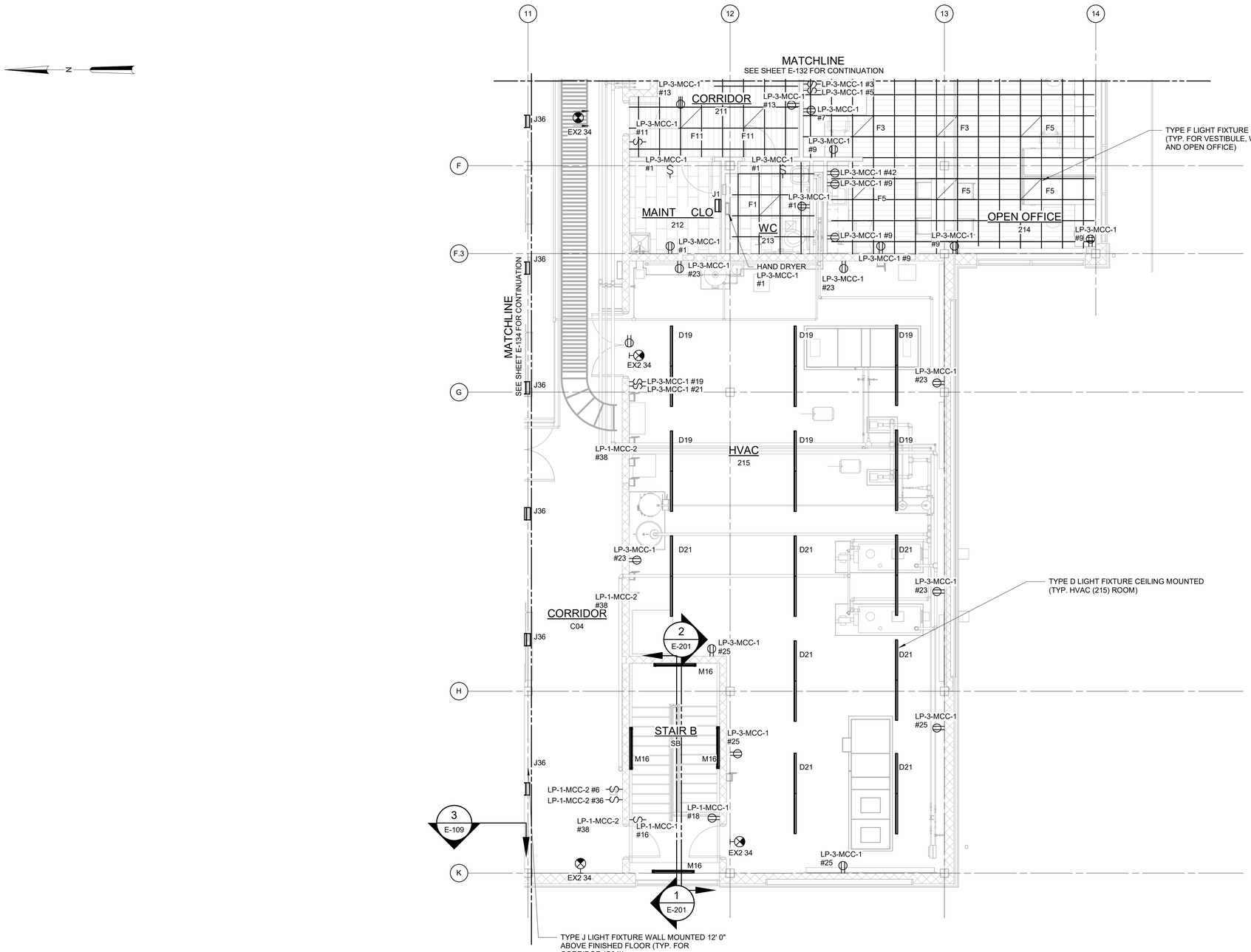

LIGHTING PLAN AT EL 421.00 - AREA 6

3/16" = 1'-0"

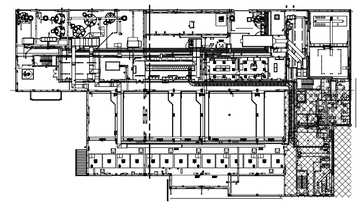

3/16" = 1'-0" 6 4 2 0 5'

NOTES:

1. REFER TO SPECIFICATION 26 50 00 FOR LIGHTING FIXTURE SCHEDULE.
2. REFER TO DRAWINGS E-012 TO E-017 FOR PANELBOARD SCHEDULES.
3. LIGHT FIXTURES IN OPEN OFFICE, WATER CLOSET, MAINTENANCE CLOSET, VESTIBULE, AND HVAC (215) ROOM SHALL BE POWERED FROM LP-3-MCC-1. LIGHT FIXTURES IN CORRIDOR (C04) SHALL BE POWERED FROM LP-1-MCC-2. EXIT SIGNS AND LIGHT FIXTURES IN STAIR B SHALL BE POWERED FROM LP-1-MCC-1.

WARNING
IT IS A VIOLATION OF SECTION 7209.2 OF THE NEW YORK STATE EDUCATION LAW FOR ANY PERSON, UNLESS ACTING UNDER THE DIRECTION OF A LICENSED PROFESSIONAL ENGINEER, TO ALTER IN ANY WAY PLANS, SPECIFICATIONS, PLATS OR REPORTS TO WHICH THE SEAL OF A PROFESSIONAL ENGINEER HAS BEEN APPLIED. IF AN ITEM BEARING THE SEAL OF A PROFESSIONAL ENGINEER IS ALTERED, THE ALTERING ENGINEER SHALL AFFIX TO THE ITEM HIS SEAL AND THE NOTATION "ALTERED BY" FOLLOWED BY HIS SIGNATURE, THE DATE, AND A SPECIFIC DESCRIPTION OF THE ALTERATION.

REV	ISSUED FOR	DATE	BY

PROJECT ENGINEER:	R. FROST
DESIGNED BY:	Y. ABDALLA
DRAWN BY:	P. NUGENT
CHECKED BY:	G. MARKOU
IF THIS BAR DOES NOT MEASURE 1" THEN DRAWING IS NOT TO FULL SCALE	0 1/2" 1"

BID SET

Hazen
HAZEN AND SAWYER
498 SEVENTH AVENUE, 11th FLOOR
NEW YORK, NEW YORK 10018

WESTCHESTER JOINT WATER WORKS
MAMARONECK, NY

RYE LAKE WATER FILTRATION PLANT
HARRISON, NY

FILTRATION PLANT
ELECTRICAL
LIGHTING PLAN - EL 421.00 - AREA 6

DATE:	FEB 2025
HAZEN NO.:	90388-000
CONTRACT NO.:	A1364-A
DRAWING NUMBER:	E-135

Autodesk Docs://90388-000_Rye_Lake_Filtration/90388-000-WFP-E.rvt
4/15/2025 3:08:05 PM

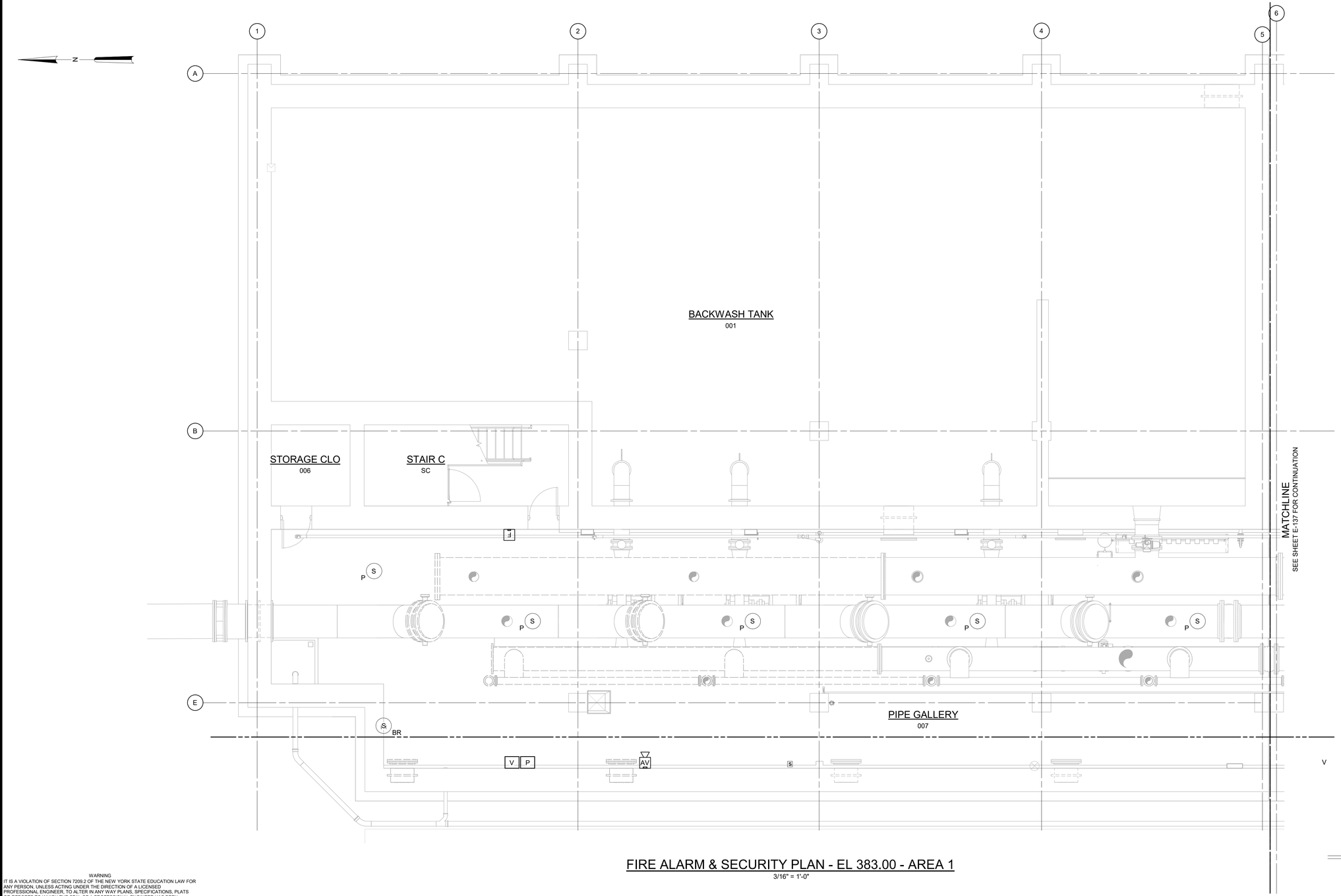

NOTES:

1. REFER TO SPECIFICATION 28 46 20 FOR FIRE ALARM SYSTEM DETAILS.
2. REFER TO SPECIFICATION 28 10 00 FOR SECURITY SYSTEM DETAILS.
3. REFER TO SPECIFICATION 27 51 16 FOR PUBLIC ADDRESS SYSTEM DETAILS.

FIRE ALARM & SECURITY PLAN - EL 383.00 - AREA 1

3/16" = 1'-0"

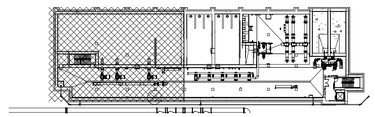

3/16" = 1'-0"

WARNING
IT IS A VIOLATION OF SECTION 7209.2 OF THE NEW YORK STATE EDUCATION LAW FOR ANY PERSON, UNLESS ACTING UNDER THE DIRECTION OF A LICENSED PROFESSIONAL ENGINEER, TO ALTER IN ANY WAY PLANS, SPECIFICATIONS, PLATS OR REPORTS TO WHICH THE SEAL OF A PROFESSIONAL ENGINEER HAS BEEN APPLIED. IF AN ITEM BEARING THE SEAL OF A PROFESSIONAL ENGINEER IS ALTERED, THE ALTERING ENGINEER SHALL AFFIX TO THE ITEM HIS SEAL AND THE NOTATION "ALTERED BY" FOLLOWED BY HIS SIGNATURE, THE DATE, AND A SPECIFIC DESCRIPTION OF THE ALTERATION.

REV	ISSUED FOR	DATE	BY

PROJECT ENGINEER:	R. FROST
DESIGNED BY:	Y. ABDALLA
DRAWN BY:	R. CHUNG
CHECKED BY:	G. MARKOU

IF THIS BAR DOES NOT MEASURE 1" THEN DRAWING IS NOT TO FULL SCALE (0, 1/2", 1")

BID SET

STATE OF NEW YORK · GEORGE MARKOU · 072603 · LICENSED PROFESSIONAL ENGINEER

Hazen
HAZEN AND SAWYER
498 SEVENTH AVENUE, 11th FLOOR
NEW YORK, NEW YORK 10018

WESTCHESTER JOINT WATER WORKS
MAMARONECK, NY

RYE LAKE WATER FILTRATION PLANT
HARRISON, NY

FILTRATION PLANT
ELECTRICAL
FIRE ALARM & SECURITY PLAN - EL 383.00 - AREA 1

DATE:	FEB 2025
HAZEN NO.:	90388-000
CONTRACT NO.:	A1364-A
DRAWING NUMBER:	E-136

Autodesk Docs://90388-000_Rye_Lake_Filtration/90388-000-WFP-E.rvt
4/15/2025 3:08:07 PM

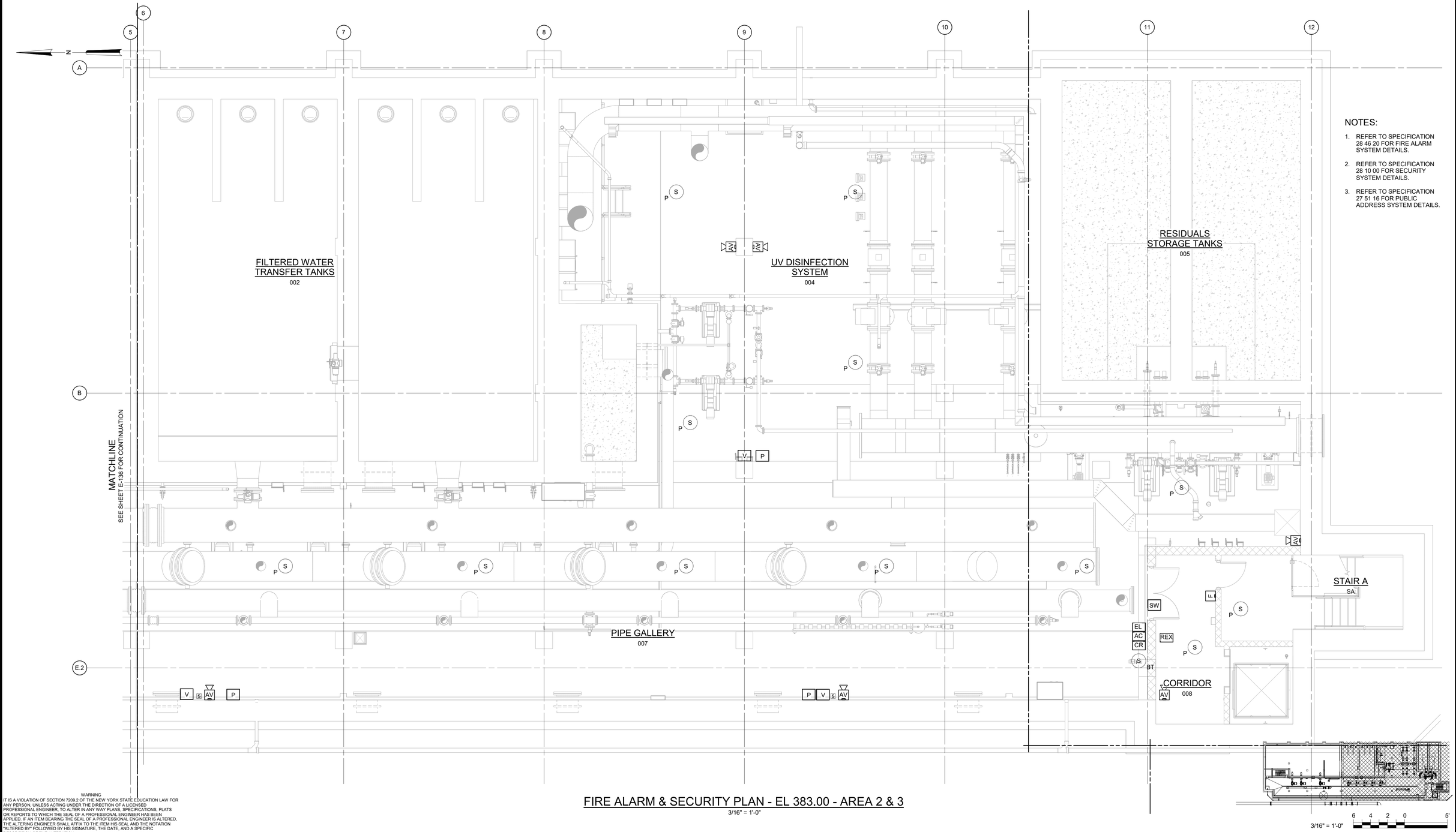

NOTES:

1. REFER TO SPECIFICATION 28 46 20 FOR FIRE ALARM SYSTEM DETAILS.
2. REFER TO SPECIFICATION 28 10 00 FOR SECURITY SYSTEM DETAILS.
3. REFER TO SPECIFICATION 27 51 16 FOR PUBLIC ADDRESS SYSTEM DETAILS.

FIRE ALARM & SECURITY PLAN - EL 383.00 - AREA 2 & 3

3/16" = 1'-0"

3/16" = 1'-0"

WARNING
IT IS A VIOLATION OF SECTION 7209.2 OF THE NEW YORK STATE EDUCATION LAW FOR ANY PERSON, UNLESS ACTING UNDER THE DIRECTION OF A LICENSED PROFESSIONAL ENGINEER, TO ALTER IN ANY WAY PLANS, SPECIFICATIONS, PLATS OR REPORTS TO WHICH THE SEAL OF A PROFESSIONAL ENGINEER HAS BEEN APPLIED. IF AN ITEM BEARING THE SEAL OF A PROFESSIONAL ENGINEER IS ALTERED, THE ALTERING ENGINEER SHALL AFFIX TO THE ITEM HIS SEAL AND THE NOTATION "ALTERED BY" FOLLOWED BY HIS SIGNATURE, THE DATE, AND A SPECIFIC DESCRIPTION OF THE ALTERATION.

REV	ISSUED FOR	DATE	BY

PROJECT ENGINEER:	R. FROST
DESIGNED BY:	Y. ABDALLA
DRAWN BY:	R. CHUNG
CHECKED BY:	G. MARKOU
IF THIS BAR DOES NOT MEASURE 1" THEN DRAWING IS NOT TO FULL SCALE	0 1/2" 1"

BID SET

STATE OF NEW YORK · GEORGE MARKOU · 072603 · LICENSED PROFESSIONAL ENGINEER

Hazen

HAZEN AND SAWYER
498 SEVENTH AVENUE, 11th FLOOR
NEW YORK, NEW YORK 10018

WESTCHESTER JOINT WATER WORKS
MAMARONECK, NY

RYE LAKE WATER FILTRATION PLANT
HARRISON, NY

FILTRATION PLANT
ELECTRICAL
FIRE ALARM & SECURITY PLAN - EL 383.00 - AREA 2 & 3

DATE:	FEB 2025
HAZEN NO.:	90388-000
CONTRACT NO.:	A1364-A
DRAWING NUMBER:	E-137

Autodesk Docs://90388-000_Rye_Lake_Filtration/90388-000-WFP-E.rvt
4/15/2025 3:08:11 PM

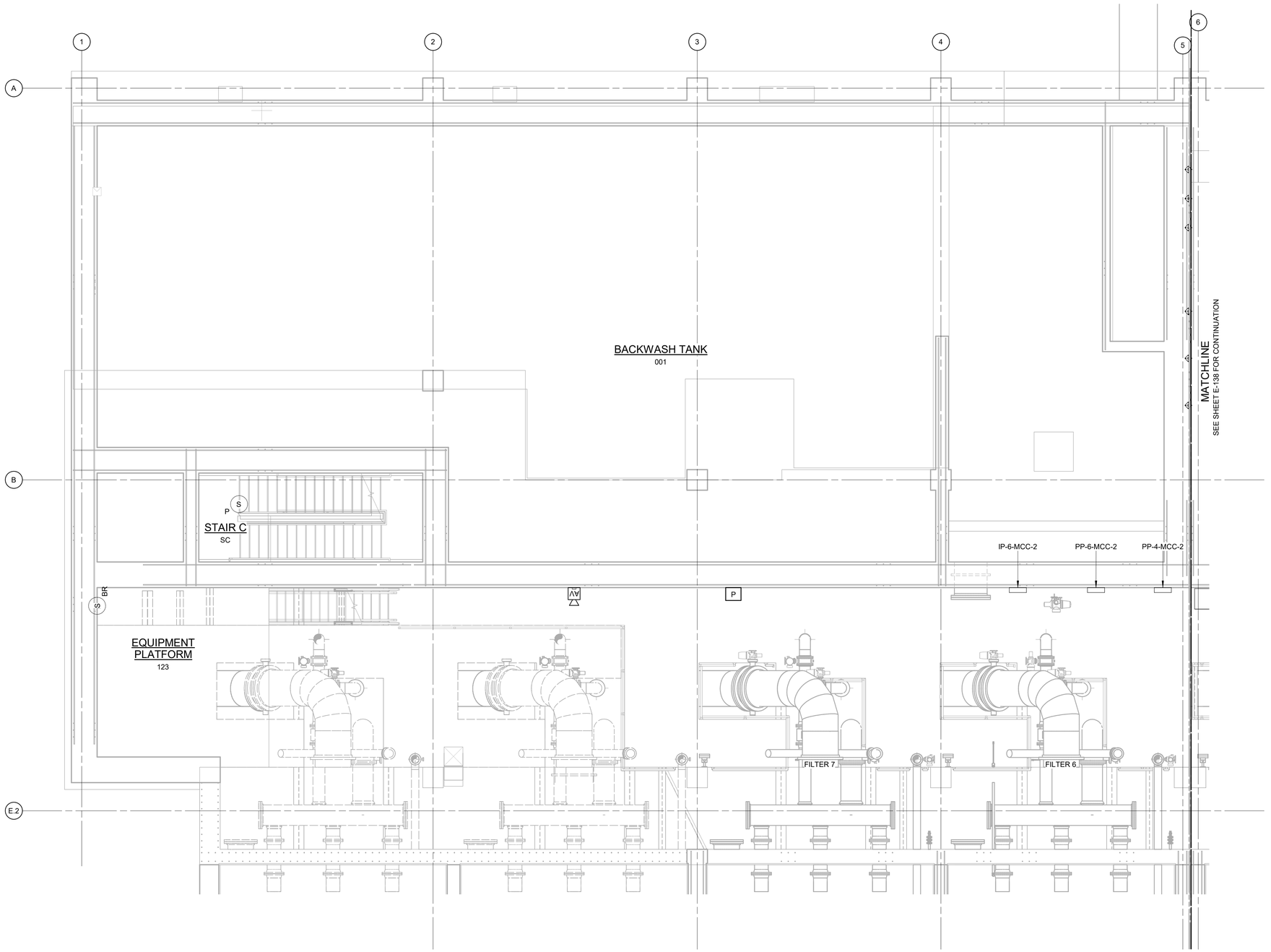

NOTES:

1. REFER TO SPECIFICATION 28 46 20 FOR FIRE ALARM SYSTEM DETAILS.
2. REFER TO SPECIFICATION 28 10 00 FOR SECURITY SYSTEM DETAILS.
3. REFER TO SPECIFICATION 27 51 16 FOR PUBLIC ADDRESS SYSTEM DETAILS.

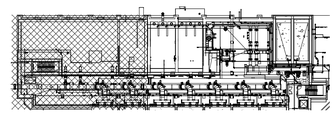

3/16" = 1'-0" 6 4 2 0 5'

FIRE ALARM & SECURITY PLAN - EL 398.00 - AREA 1

3/16" = 1'-0"

WARNING
IT IS A VIOLATION OF SECTION 7209.2 OF THE NEW YORK STATE EDUCATION LAW FOR ANY PERSON, UNLESS ACTING UNDER THE DIRECTION OF A LICENSED PROFESSIONAL ENGINEER, TO ALTER IN ANY WAY PLANS, SPECIFICATIONS, PLATS OR REPORTS TO WHICH THE SEAL OF A PROFESSIONAL ENGINEER HAS BEEN APPLIED. IF AN ITEM BEARING THE SEAL OF A PROFESSIONAL ENGINEER IS ALTERED, THE ALTERING ENGINEER SHALL AFFIX TO THE ITEM HIS SEAL AND THE NOTATION "ALTERED BY" FOLLOWED BY HIS SIGNATURE, THE DATE, AND A SPECIFIC DESCRIPTION OF THE ALTERATION.

REV	ISSUED FOR	DATE	BY

PROJECT ENGINEER:	R. FROST
DESIGNED BY:	Y. ABDALLA
DRAWN BY:	R. CHUNG
CHECKED BY:	G. MARKOU

IF THIS BAR DOES NOT MEASURE 1" THEN DRAWING IS NOT TO FULL SCALE 0 1/2" 1"

BID SET

STATE OF NEW YORK · GEORGE MARKOU · 072603 · LICENSED PROFESSIONAL ENGINEER

Hazen
HAZEN AND SAWYER
498 SEVENTH AVENUE, 11th FLOOR
NEW YORK, NEW YORK 10018

WESTCHESTER JOINT WATER WORKS
MAMARONECK, NY

RYE LAKE WATER FILTRATION PLANT
HARRISON, NY

FILTRATION PLANT
ELECTRICAL
FIRE ALARM & SECURITY PLAN - EL 398.00 - AREA 1

DATE:	FEB 2025
HAZEN NO.:	90388-000
CONTRACT NO.:	A1364-A
DRAWING NUMBER:	E-138

Autodesk Docs://90388-000_Rye_Lake_Filtration/90388-000-WFP-E.rvt
4/15/2025 3:08:14 PM

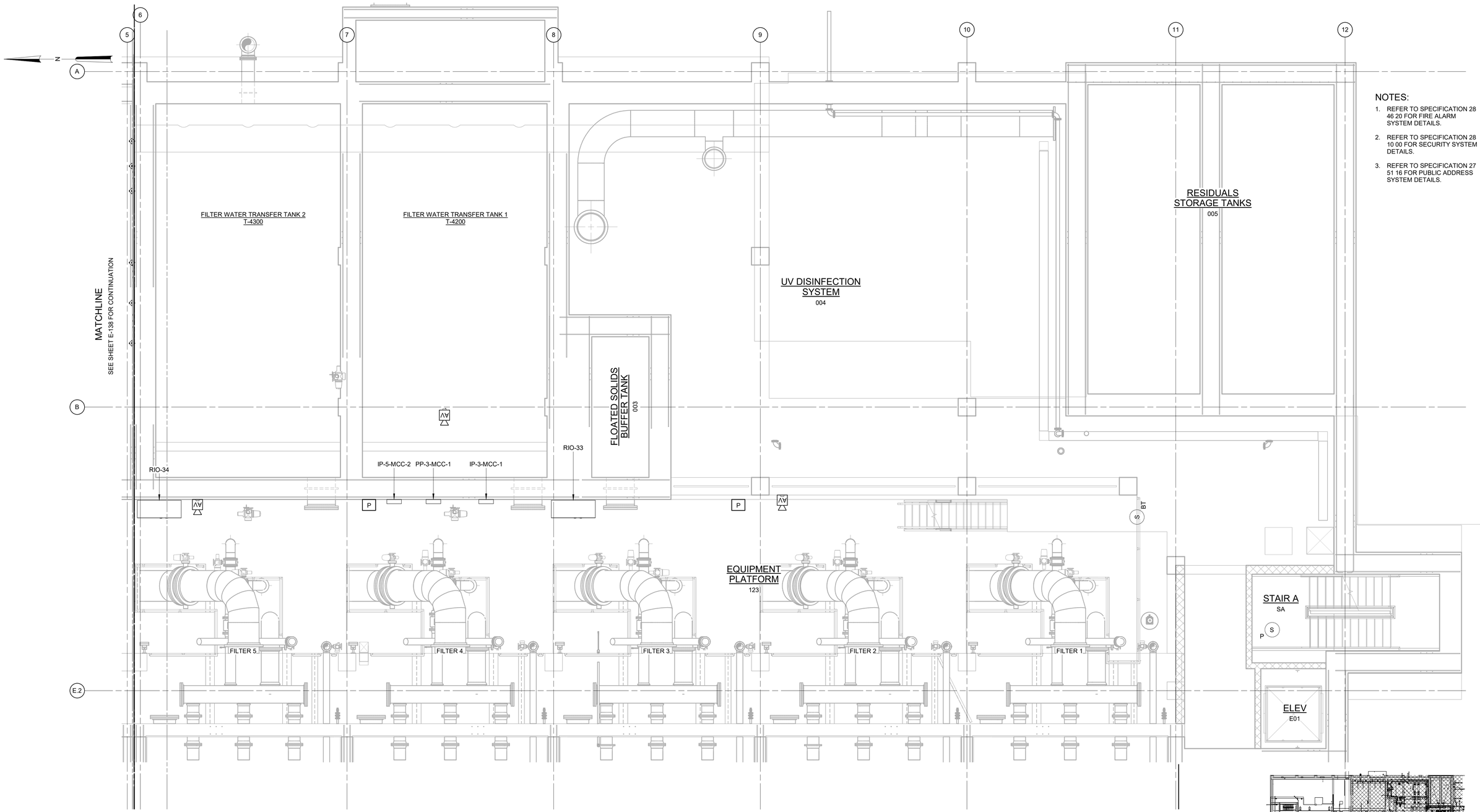

NOTES:

1. REFER TO SPECIFICATION 28 46 20 FOR FIRE ALARM SYSTEM DETAILS.
2. REFER TO SPECIFICATION 28 10 00 FOR SECURITY SYSTEM DETAILS.
3. REFER TO SPECIFICATION 27 51 16 FOR PUBLIC ADDRESS SYSTEM DETAILS.

3/16" = 1'-0"

6 4 2 0 5'

FIRE ALARM & SECURITY PLAN - EL 398.00 - AREA 2 & 3

3/16" = 1'-0"

WARNING
IT IS A VIOLATION OF SECTION 7209.2 OF THE NEW YORK STATE EDUCATION LAW FOR ANY PERSON, UNLESS ACTING UNDER THE DIRECTION OF A LICENSED PROFESSIONAL ENGINEER, TO ALTER IN ANY WAY PLANS, SPECIFICATIONS, PLATS OR REPORTS TO WHICH THE SEAL OF A PROFESSIONAL ENGINEER HAS BEEN APPLIED. IF AN ITEM BEARING THE SEAL OF A PROFESSIONAL ENGINEER IS ALTERED, THE ALTERING ENGINEER SHALL AFFIX TO THE ITEM HIS SEAL AND THE NOTATION "ALTERED BY" FOLLOWED BY HIS SIGNATURE, THE DATE, AND A SPECIFIC DESCRIPTION OF THE ALTERATION.

REV	ISSUED FOR	DATE	BY

PROJECT ENGINEER:	R. FROST
DESIGNED BY:	Y. ABDALLA
DRAWN BY:	R. CHUNG
CHECKED BY:	G. MARKOU

IF THIS BAR DOES NOT MEASURE 1" THEN DRAWING IS NOT TO FULL SCALE 0 1/2" 1"

BID SET

STATE OF NEW YORK · GEORGE MARKOU · 072603 · LICENSED PROFESSIONAL ENGINEER

Hazen

HAZEN AND SAWYER
498 SEVENTH AVENUE, 11th FLOOR
NEW YORK, NEW YORK 10018

WESTCHESTER JOINT WATER WORKS
MAMARONECK, NY

RYE LAKE WATER FILTRATION PLANT
HARRISON, NY

FILTRATION PLANT
ELECTRICAL
FIRE ALARM & SECURITY PLAN - EL 398.00 - AREA 2 & 3

DATE:	FEB 2025
HAZEN NO.:	90388-000
CONTRACT NO.:	A1364-A
DRAWING NUMBER:	E-139

Autodesk Docs://90388-000_Rye_Lake_Filtration/90388-000-WFP-E.rvt
4/15/2025 3:08:17 PM

NOTES:

1. REFER TO SPECIFICATION 28 46 20 FOR FIRE ALARM SYSTEM DETAILS.
2. REFER TO SPECIFICATION 28 10 00 FOR SECURITY SYSTEM DETAILS.
3. REFER TO SPECIFICATION 27 51 16 FOR PUBLIC ADDRESS SYSTEM DETAILS.

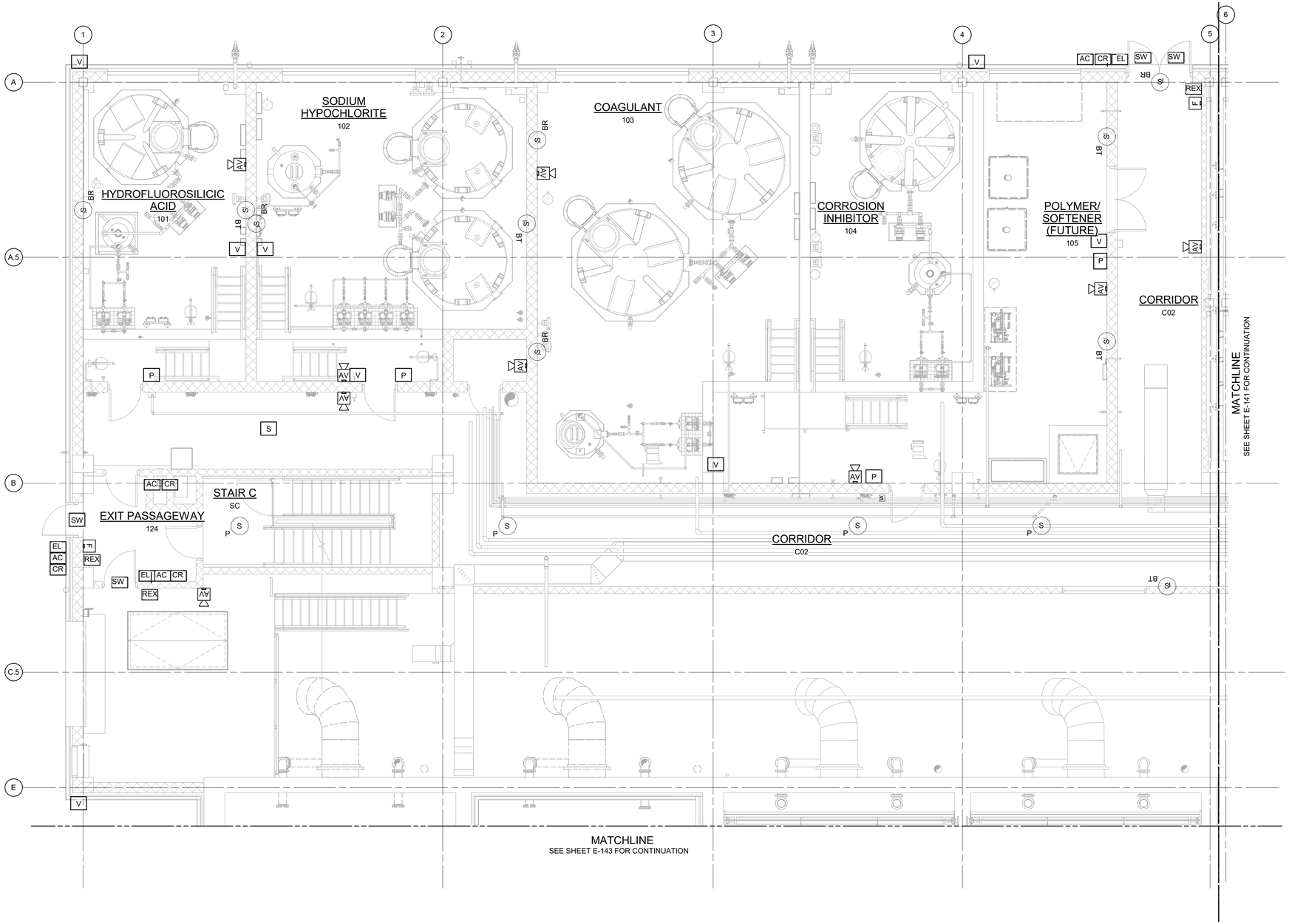

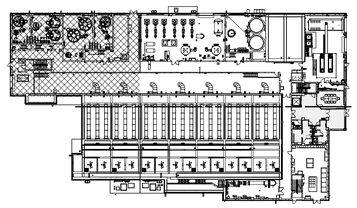

3/16" = 1'-0"

FIRE ALARM & SECURITY PLAN - EL 407.00 - AREA 1

3/16" = 1'-0"

WARNING
IT IS A VIOLATION OF SECTION 7209.2 OF THE NEW YORK STATE EDUCATION LAW FOR ANY PERSON, UNLESS ACTING UNDER THE DIRECTION OF A LICENSED PROFESSIONAL ENGINEER, TO ALTER IN ANY WAY PLANS, SPECIFICATIONS, PLATS OR REPORTS TO WHICH THE SEAL OF A PROFESSIONAL ENGINEER HAS BEEN APPLIED. IF AN ITEM BEARING THE SEAL OF A PROFESSIONAL ENGINEER IS ALTERED, THE ALTERING ENGINEER SHALL AFFIX TO THE ITEM HIS SEAL AND THE NOTATION "ALTERED BY" FOLLOWED BY HIS SIGNATURE, THE DATE, AND A SPECIFIC DESCRIPTION OF THE ALTERATION.

REV	ISSUED FOR	DATE	BY

PROJECT ENGINEER:	R. FROST
DESIGNED BY:	Y. ABDALLA
DRAWN BY:	R. CHUNG
CHECKED BY:	G. MARKOU
IF THIS BAR DOES NOT MEASURE 1" THEN DRAWING IS NOT TO FULL SCALE	0 1/2" 1"

BID SET

STATE OF NEW YORK · GEORGE MARKOU · 072603 · LICENSED PROFESSIONAL ENGINEER

Hazen

HAZEN AND SAWYER
498 SEVENTH AVENUE, 11th FLOOR
NEW YORK, NEW YORK 10018

WESTCHESTER JOINT WATER WORKS
MAMARONECK, NY

RYE LAKE WATER FILTRATION PLANT
HARRISON, NY

FILTRATION PLANT
ELECTRICAL
FIRE ALARM & SECURITY PLAN - EL 407.00 - AREA 1

DATE:	FEB 2025
HAZEN NO.:	90388-000
CONTRACT NO.:	A1364-A
DRAWING NUMBER:	E-140

Autodesk Docs://90388-000_Rye_Lake_Filtration/90388-000-WFP-E.rvt
4/15/2025 3:08:25 PM

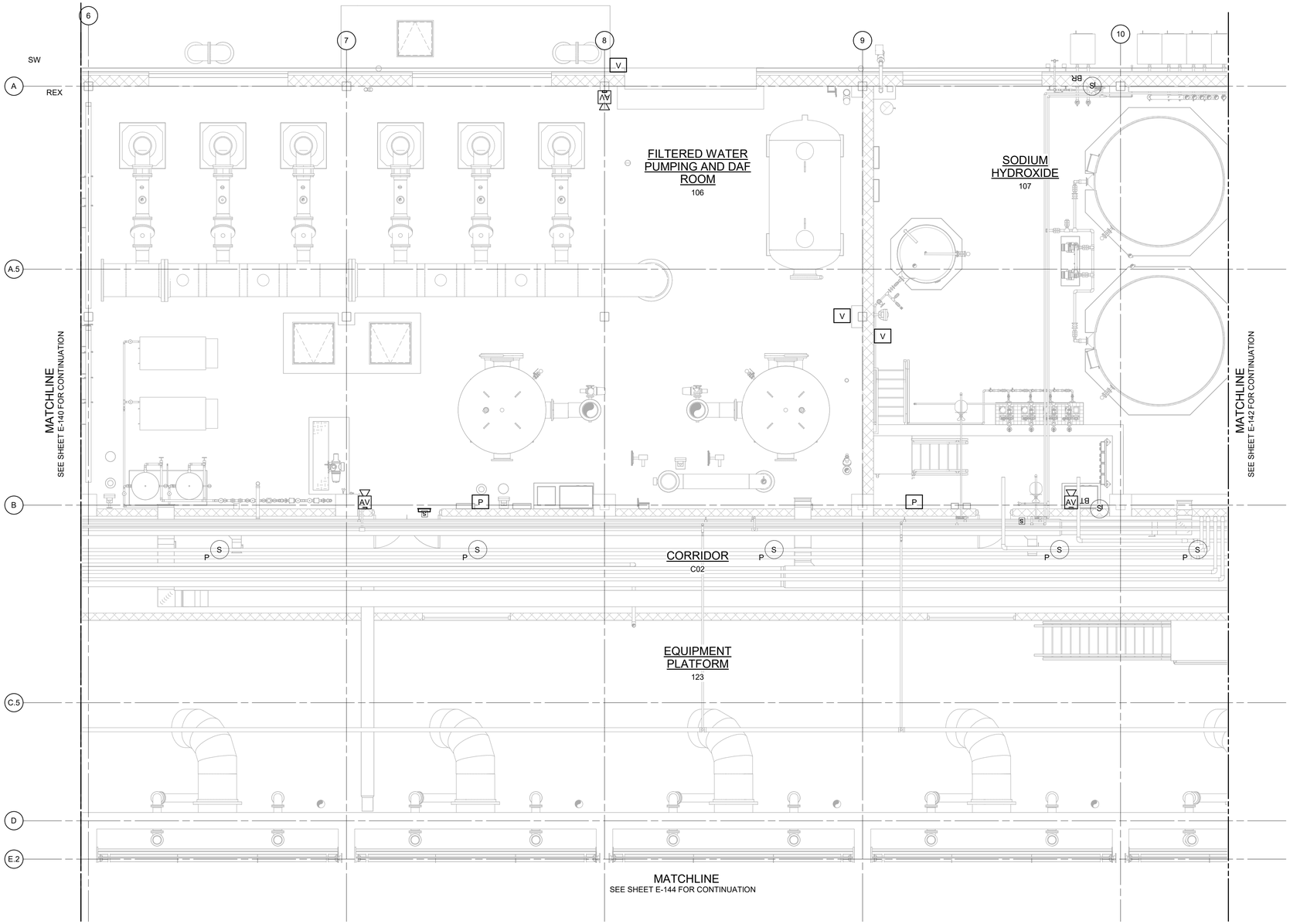

NOTES:

1. REFER TO SPECIFICATION 28 46 20 FOR FIRE ALARM SYSTEM DETAILS.
2. REFER TO SPECIFICATION 28 10 00 FOR SECURITY SYSTEM DETAILS.
3. REFER TO SPECIFICATION 27 51 16 FOR PUBLIC ADDRESS SYSTEM DETAILS.

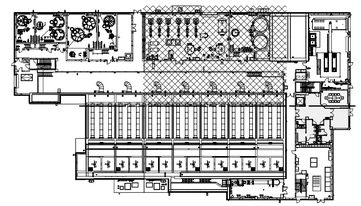

FIRE ALARM & SECURITY PLAN - EL 407.00 - AREA 2

3/16" = 1'-0"

WARNING
IT IS A VIOLATION OF SECTION 7209.2 OF THE NEW YORK STATE EDUCATION LAW FOR ANY PERSON, UNLESS ACTING UNDER THE DIRECTION OF A LICENSED PROFESSIONAL ENGINEER, TO ALTER IN ANY WAY PLANS, SPECIFICATIONS, PLATS OR REPORTS TO WHICH THE SEAL OF A PROFESSIONAL ENGINEER HAS BEEN APPLIED. IF AN ITEM BEARING THE SEAL OF A PROFESSIONAL ENGINEER IS ALTERED, THE ALTERING ENGINEER SHALL AFFIX TO THE ITEM HIS SEAL AND THE NOTATION "ALTERED BY" FOLLOWED BY HIS SIGNATURE, THE DATE, AND A SPECIFIC DESCRIPTION OF THE ALTERATION.

REV	ISSUED FOR	DATE	BY

PROJECT ENGINEER:	R. FROST
DESIGNED BY:	Y. ABDALLA
DRAWN BY:	R. CHUNG
CHECKED BY:	G. MARKOU

IF THIS BAR DOES NOT MEASURE 1" THEN DRAWING IS NOT TO FULL SCALE 0 1/2" 1"

BID SET

STATE OF NEW YORK · GEORGE MARKOU · 072603 · LICENSED PROFESSIONAL ENGINEER

Hazen

HAZEN AND SAWYER
498 SEVENTH AVENUE, 11th FLOOR
NEW YORK, NEW YORK 10018

WESTCHESTER JOINT WATER WORKS
MAMARONECK, NY

RYE LAKE WATER FILTRATION PLANT
HARRISON, NY

FILTRATION PLANT
ELECTRICAL
FIRE ALARM & SECURITY PLAN - EL 407.00 - AREA 2

DATE:	FEB 2025
HAZEN NO.:	90388-000
CONTRACT NO.:	A1364-A
DRAWING NUMBER:	E-141

Autodesk Docs://90388-000_Rye_Lake_Filtration/90388-000-WFP-E.rvt
4/15/2025 3:08:32 PM

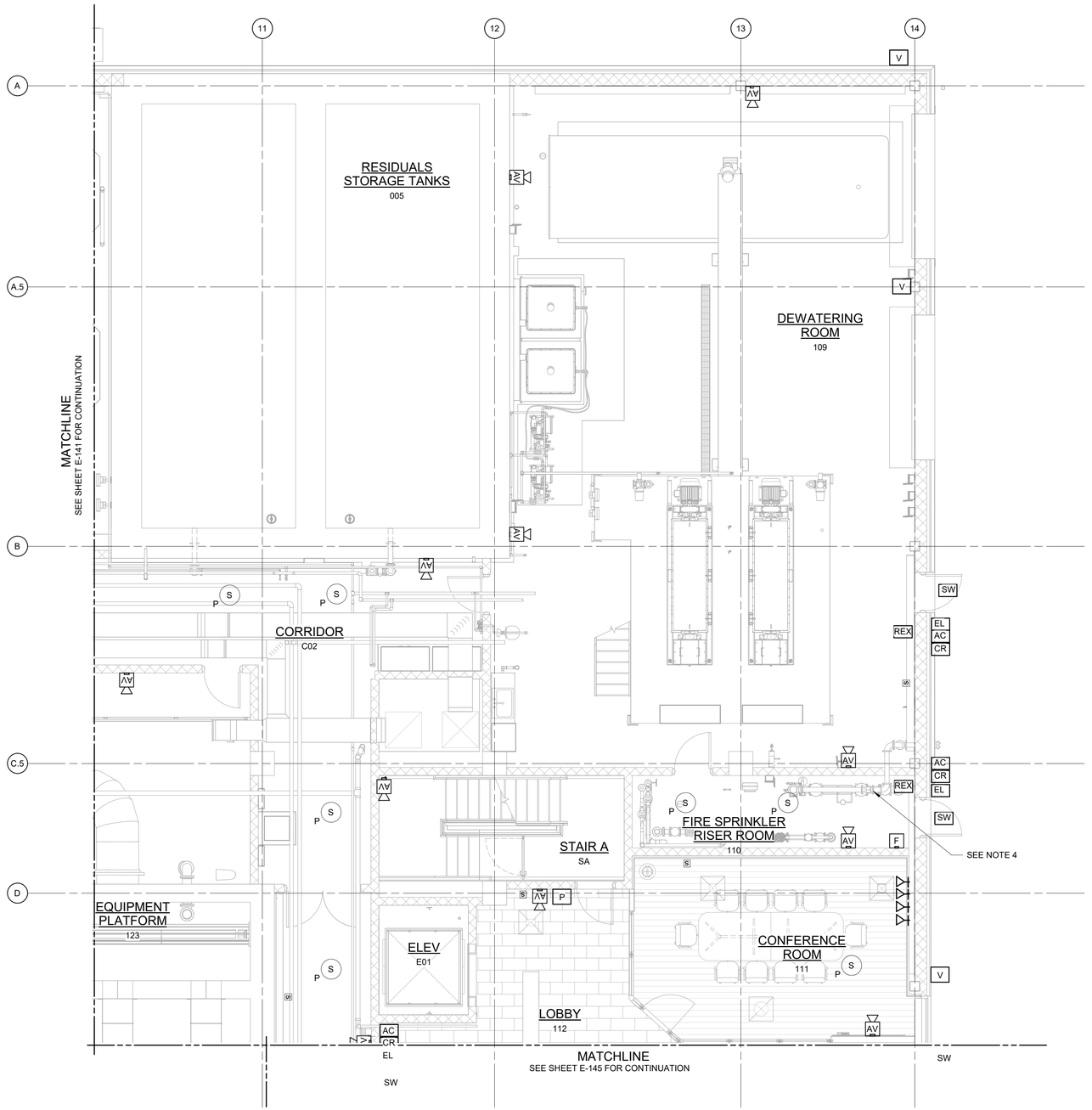

NOTES:

1. REFER TO SPECIFICATION 28 46 20 FOR FIRE ALARM SYSTEM DETAILS.
2. REFER TO SPECIFICATION 28 10 00 FOR SECURITY SYSTEM DETAILS.
3. REFER TO SPECIFICATION 27 51 16 FOR PUBLIC ADDRESS SYSTEM DETAILS.
4. FLOW SWITCH ALARM, PRESSURE ALARM, CONTROL VALVE TAMPER SWITCH 1, DCDV GATE VALVE 1 - TAMPER SWITCH AND DCDV GATE VALVE 2 - TAMPER SWITCH LOCATED IN WET SPRINKLER SYSTEM.

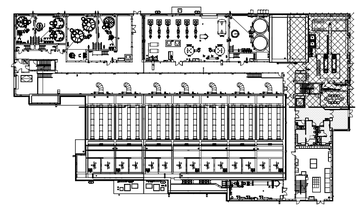

3/16" = 1'-0"

FIRE ALARM & SECURITY PLAN - EL 407.00 - AREA 3

3/16" = 1'-0"

WARNING
IT IS A VIOLATION OF SECTION 7209.2 OF THE NEW YORK STATE EDUCATION LAW FOR ANY PERSON, UNLESS ACTING UNDER THE DIRECTION OF A LICENSED PROFESSIONAL ENGINEER, TO ALTER IN ANY WAY PLANS, SPECIFICATIONS, PLATS OR REPORTS TO WHICH THE SEAL OF A PROFESSIONAL ENGINEER HAS BEEN APPLIED. IF AN ITEM BEARING THE SEAL OF A PROFESSIONAL ENGINEER IS ALTERED, THE ALTERING ENGINEER SHALL AFFIX TO THE ITEM HIS SEAL AND THE NOTATION "ALTERED BY" FOLLOWED BY HIS SIGNATURE, THE DATE, AND A SPECIFIC DESCRIPTION OF THE ALTERATION.

REV	ISSUED FOR	DATE	BY

PROJECT ENGINEER:	R. FROST
DESIGNED BY:	Y. ABDALLA
DRAWN BY:	R. CHUNG
CHECKED BY:	G. MARKOU

IF THIS BAR DOES NOT MEASURE 1" THEN DRAWING IS NOT TO FULL SCALE 0 1/2" 1"

BID SET

STATE OF NEW YORK · GEORGE MARKOU · 072603 · LICENSED PROFESSIONAL ENGINEER

Hazen
HAZEN AND SAWYER
498 SEVENTH AVENUE, 11th FLOOR
NEW YORK, NEW YORK 10018

WESTCHESTER JOINT WATER WORKS
MAMARONECK, NY

RYE LAKE WATER FILTRATION PLANT
HARRISON, NY

FILTRATION PLANT
ELECTRICAL
FIRE ALARM & SECURITY PLAN - EL 407.00 - AREA 3

DATE:	FEB 2025
HAZEN NO.:	90388-000
CONTRACT NO.:	A1364-A
DRAWING NUMBER:	E-142

Autodesk Docs://90388-000_Rye_Lake_Filtration/90388-000-WFP-E.rvt
4/15/2025 3:08:40 PM



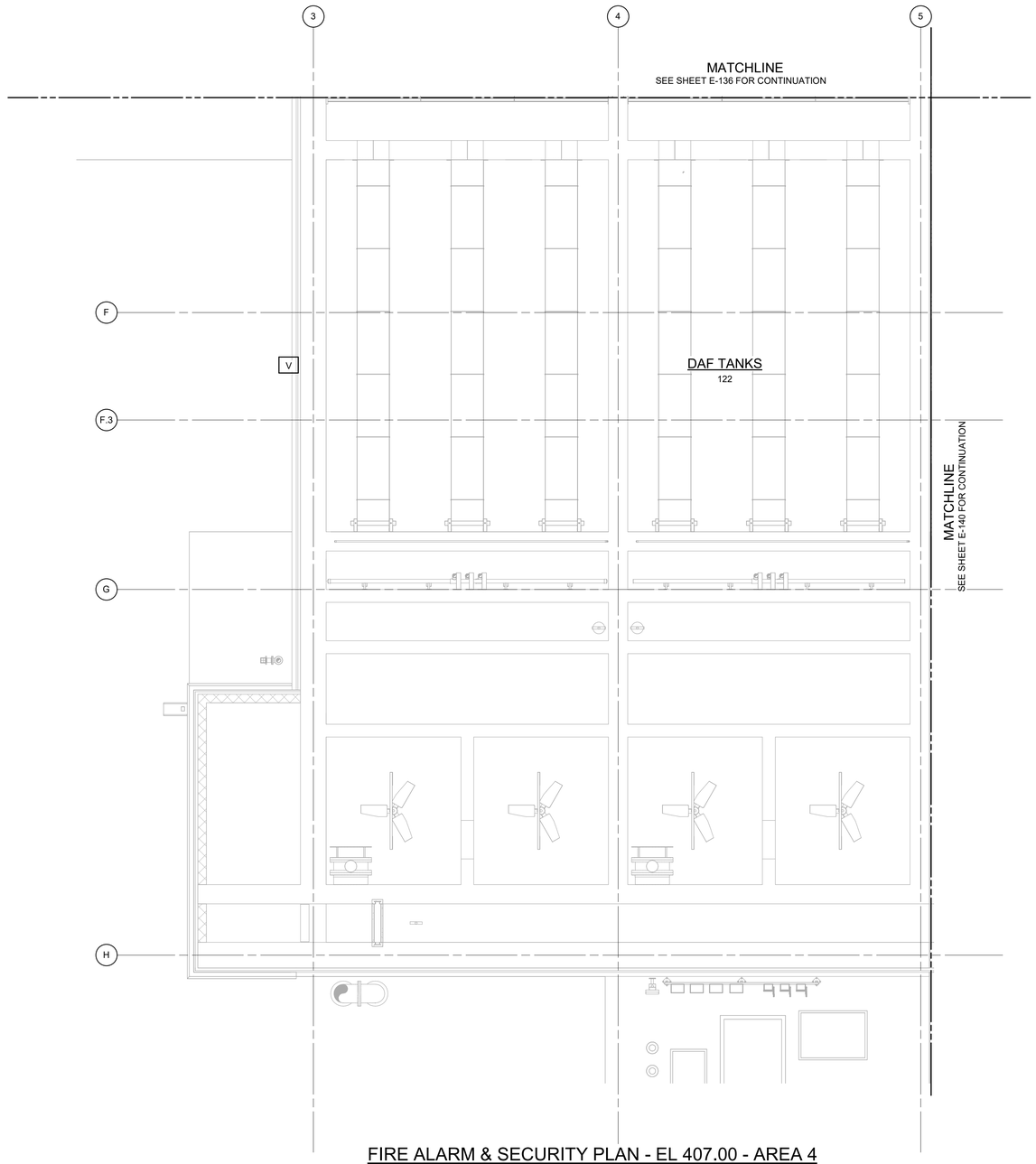

FIRE ALARM & SECURITY PLAN - EL 407.00 - AREA 4

3/16" = 1'-0"

NOTES:

1. REFER TO SPECIFICATION 28 46 20 FOR FIRE ALARM SYSTEM DETAILS.
2. REFER TO SPECIFICATION 28 10 00 FOR SECURITY SYSTEM DETAILS.
3. REFER TO SPECIFICATION 27 51 16 FOR PUBLIC ADDRESS SYSTEM DETAILS.

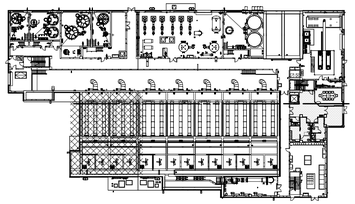

3/16" = 1'-0" 6 4 2 0 5'

WARNING
IT IS A VIOLATION OF SECTION 7209.2 OF THE NEW YORK STATE EDUCATION LAW FOR ANY PERSON, UNLESS ACTING UNDER THE DIRECTION OF A LICENSED PROFESSIONAL ENGINEER, TO ALTER IN ANY WAY PLANS, SPECIFICATIONS, PLATS OR REPORTS TO WHICH THE SEAL OF A PROFESSIONAL ENGINEER HAS BEEN APPLIED. IF AN ITEM BEARING THE SEAL OF A PROFESSIONAL ENGINEER IS ALTERED, THE ALTERING ENGINEER SHALL AFFIX TO THE ITEM HIS SEAL AND THE NOTATION "ALTERED BY" FOLLOWED BY HIS SIGNATURE, THE DATE, AND A SPECIFIC DESCRIPTION OF THE ALTERATION.

REV	ISSUED FOR	DATE	BY

PROJECT ENGINEER:	R. FROST
DESIGNED BY:	Y. ABDALLA
DRAWN BY:	R. CHUNG
CHECKED BY:	G. MARKOU
IF THIS BAR DOES NOT MEASURE 1" THEN DRAWING IS NOT TO FULL SCALE	0 1/2" 1"

BID SET

STATE OF NEW YORK GEORGE MARKOU 072603 LICENSED PROFESSIONAL ENGINEER

Hazen

HAZEN AND SAWYER
498 SEVENTH AVENUE, 11th FLOOR
NEW YORK, NEW YORK 10018

WESTCHESTER JOINT WATER WORKS
MAMARONECK, NY

RYE LAKE WATER FILTRATION PLANT
HARRISON, NY

FILTRATION PLANT
ELECTRICAL
FIRE ALARM & SECURITY PLAN - EL 407.00 - AREA 4

DATE:	FEB 2025
HAZEN NO.:	90388-000
CONTRACT NO.:	A1364-A
DRAWING NUMBER:	E-143

Autodesk Docs://90388-000_Rye_Lake_Filtration/90388-000-WFP-E.rvt
4/15/2025 3:08:46 PM

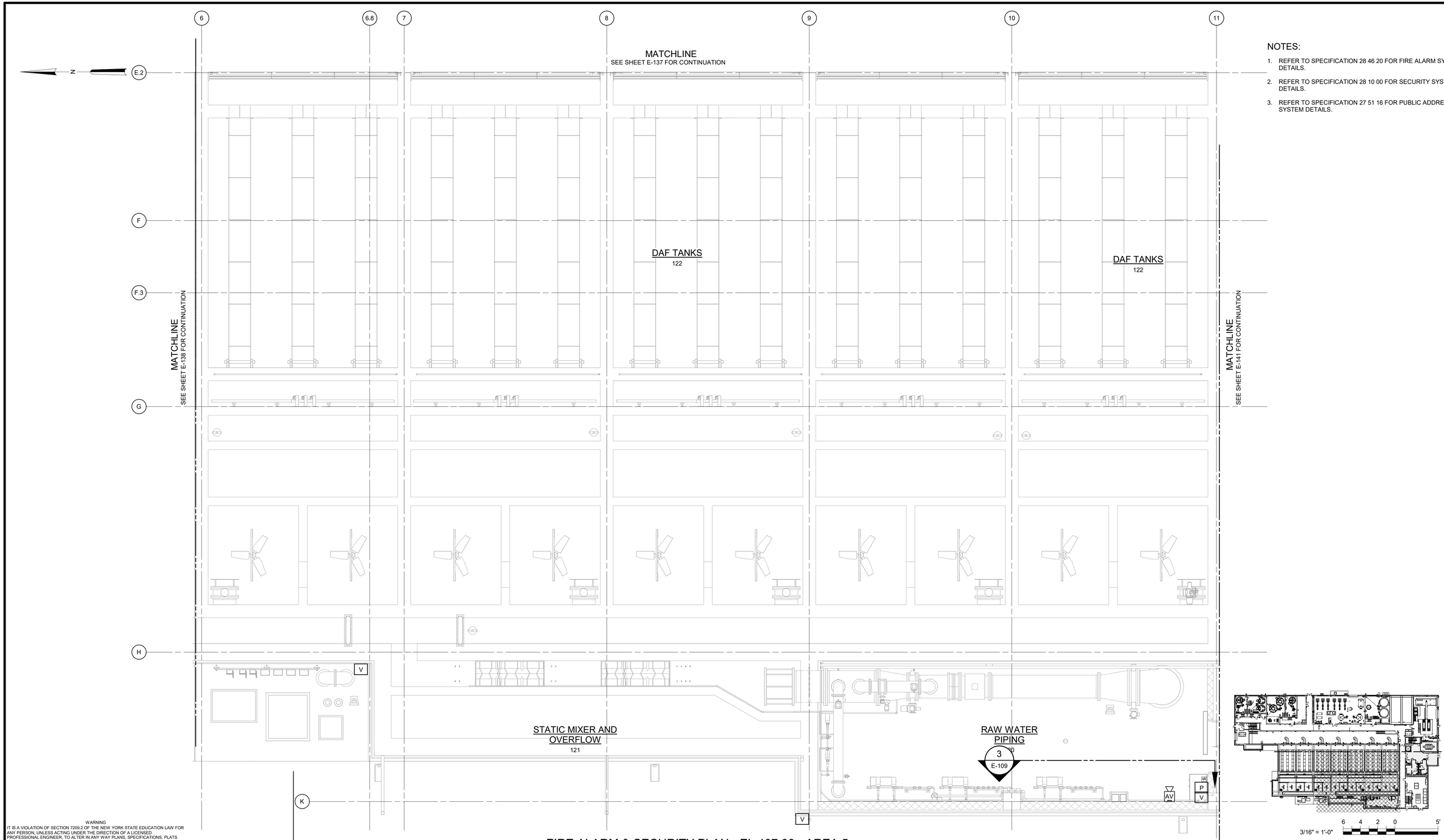

NOTES:

1. REFER TO SPECIFICATION 28 46 20 FOR FIRE ALARM SYSTEM DETAILS.
2. REFER TO SPECIFICATION 28 10 00 FOR SECURITY SYSTEM DETAILS.
3. REFER TO SPECIFICATION 27 51 16 FOR PUBLIC ADDRESS SYSTEM DETAILS.

FIRE ALARM & SECURITY PLAN - EL 407.00 - AREA 5

3/16" = 1'-0"

WARNING
IT IS A VIOLATION OF SECTION 7209.2 OF THE NEW YORK STATE EDUCATION LAW FOR ANY PERSON, UNLESS ACTING UNDER THE DIRECTION OF A LICENSED PROFESSIONAL ENGINEER, TO ALTER IN ANY WAY PLANS, SPECIFICATIONS, PLATS OR REPORTS TO WHICH THE SEAL OF A PROFESSIONAL ENGINEER HAS BEEN APPLIED. IF AN ITEM BEARING THE SEAL OF A PROFESSIONAL ENGINEER IS ALTERED, THE ALTERING ENGINEER SHALL AFFIX TO THE ITEM HIS SEAL AND THE NOTATION "ALTERED BY" FOLLOWED BY HIS SIGNATURE, THE DATE, AND A SPECIFIC DESCRIPTION OF THE ALTERATION.

REV	ISSUED FOR	DATE	BY

PROJECT ENGINEER:	R. FROST
DESIGNED BY:	Y. ABDALLA
DRAWN BY:	R. CHUNG
CHECKED BY:	G. MARKOU

IF THIS BAR DOES NOT MEASURE 1" THEN DRAWING IS NOT TO FULL SCALE 0 1/2" 1"

BID SET

STATE OF NEW YORK · GEORGE MARKOU · 022603 · LICENSED PROFESSIONAL ENGINEER

Hazen
HAZEN AND SAWYER
498 SEVENTH AVENUE, 11th FLOOR
NEW YORK, NEW YORK 10018

WESTCHESTER JOINT WATER WORKS
MAMARONECK, NY

RYE LAKE WATER FILTRATION PLANT
HARRISON, NY

FILTRATION PLANT
ELECTRICAL
FIRE ALARM & SECURITY PLAN - EL 407.00 - AREA 5

DATE:	FEB 2025
HAZEN NO.:	90388-000
CONTRACT NO.:	A1364-A
DRAWING NUMBER:	E-144

Autodesk Docs://90388-000_Rye_Lake_Filtration/90388-000-WFP-E.rvt
4/15/2025 3:08:52 PM

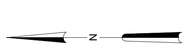

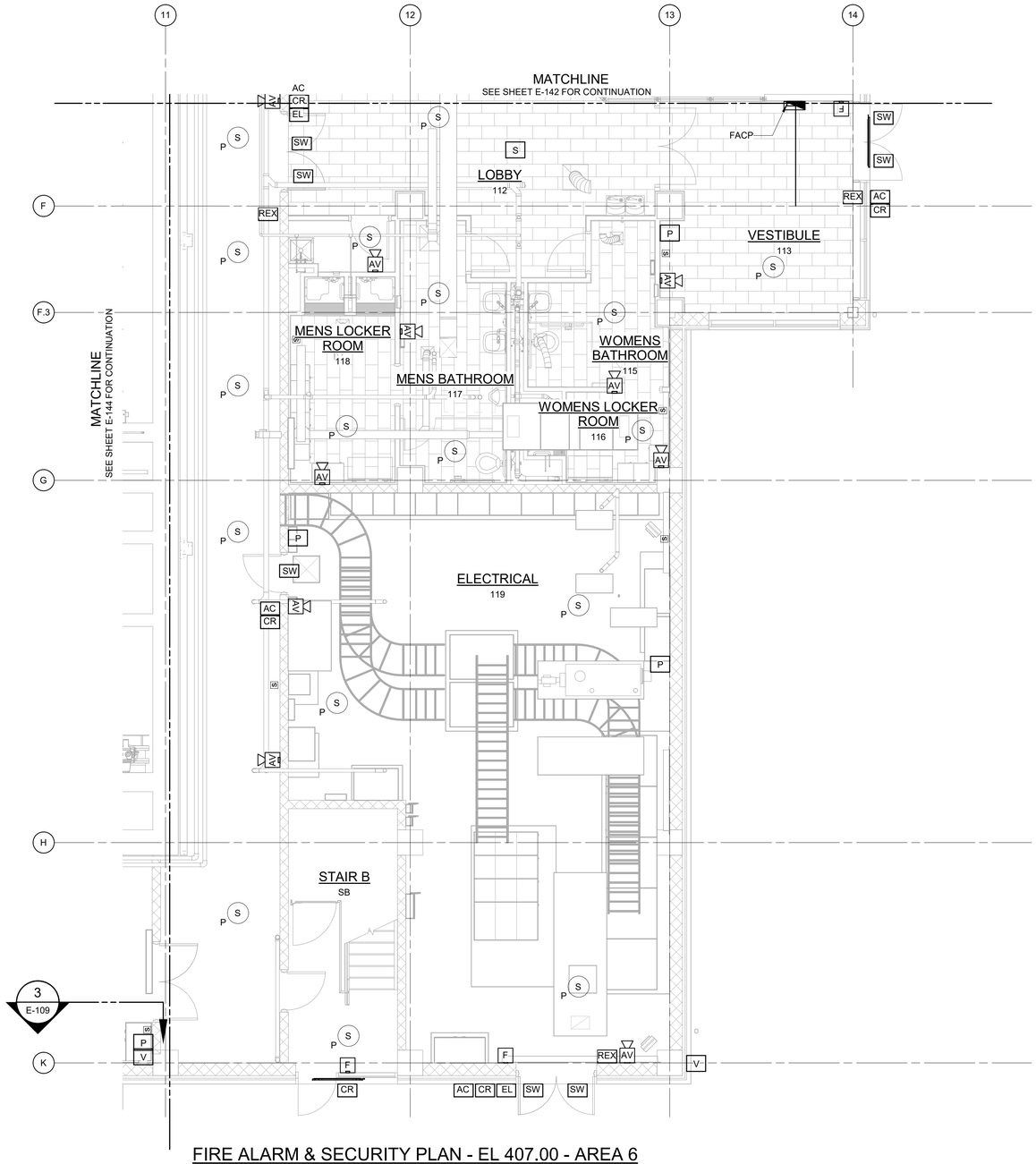

FIRE ALARM & SECURITY PLAN - EL 407.00 - AREA 6

3/16" = 1'-0"

NOTES:

1. REFER TO SPECIFICATION 28 46 20 FOR FIRE ALARM SYSTEM DETAILS.
2. REFER TO SPECIFICATION 28 10 00 FOR SECURITY SYSTEM DETAILS.
3. REFER TO SPECIFICATION 27 51 16 FOR PUBLIC ADDRESS SYSTEM DETAILS.

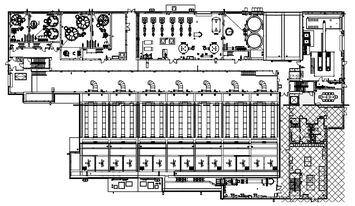

3/16" = 1'-0" (6 4 2 0 5')

WARNING
IT IS A VIOLATION OF SECTION 7209.2 OF THE NEW YORK STATE EDUCATION LAW FOR ANY PERSON, UNLESS ACTING UNDER THE DIRECTION OF A LICENSED PROFESSIONAL ENGINEER, TO ALTER IN ANY WAY PLANS, SPECIFICATIONS, PLATS OR REPORTS TO WHICH THE SEAL OF A PROFESSIONAL ENGINEER HAS BEEN APPLIED. IF AN ITEM BEARING THE SEAL OF A PROFESSIONAL ENGINEER IS ALTERED, THE ALTERING ENGINEER SHALL AFFIX TO THE ITEM HIS SEAL AND THE NOTATION "ALTERED BY" FOLLOWED BY HIS SIGNATURE, THE DATE, AND A SPECIFIC DESCRIPTION OF THE ALTERATION.

REV	ISSUED FOR	DATE	BY

PROJECT ENGINEER:	R. FROST
DESIGNED BY:	Y. ABDALLA
DRAWN BY:	R. CHUNG
CHECKED BY:	G. MARKOU
IF THIS BAR DOES NOT MEASURE 1" THEN DRAWING IS NOT TO FULL SCALE	0 1/2" 1"

BID SET

STATE OF NEW YORK — JORGE MARKOU — 072603 — LICENSED PROFESSIONAL ENGINEER

Hazen

HAZEN AND SAWYER
498 SEVENTH AVENUE, 11th FLOOR
NEW YORK, NEW YORK 10018

WESTCHESTER JOINT WATER WORKS
MAMARONECK, NY

RYE LAKE WATER FILTRATION PLANT
HARRISON, NY

FILTRATION PLANT
ELECTRICAL
FIRE ALARM & SECURITY PLAN - EL 407.00 - AREA 6

DATE:	FEB 2025
HAZEN NO.:	90388-000
CONTRACT NO.:	A1364-A
DRAWING NUMBER:	E-145

Autodesk Docs://90388-000_Rye_Lake_Filtration/90388-000-WFP-E.rvt
4/15/2025 3:08:58 PM

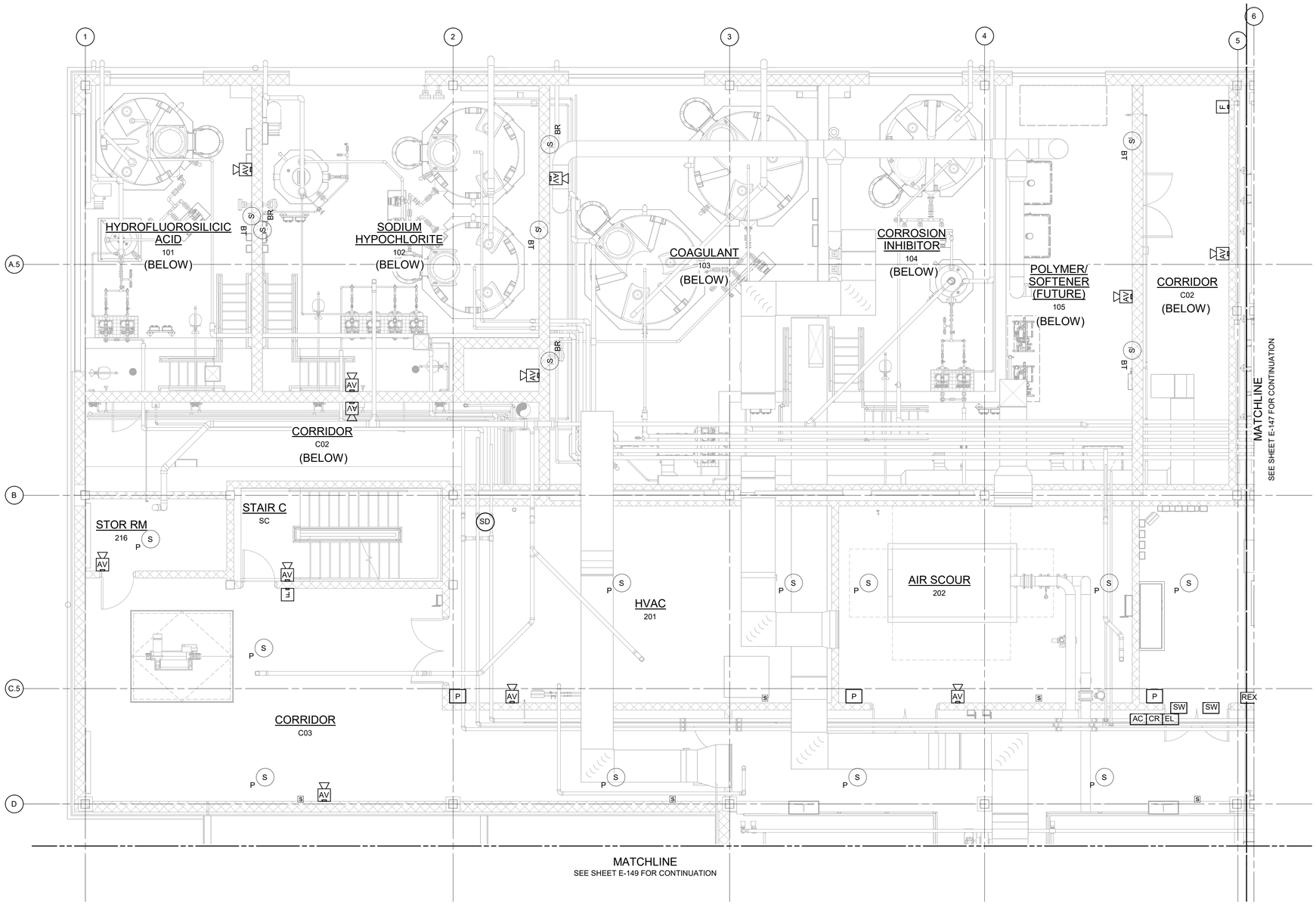

NOTES:

1. REFER TO SPECIFICATION 28 46 20 FOR FIRE ALARM SYSTEM DETAILS.
2. REFER TO SPECIFICATION 28 10 00 FOR SECURITY SYSTEM DETAILS.
3. REFER TO SPECIFICATION 27 51 16 FOR PUBLIC ADDRESS SYSTEM DETAILS.

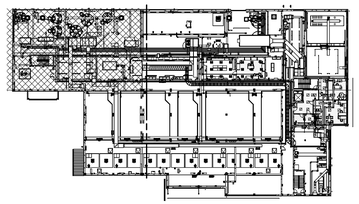

3/16" = 1'-0"

WARNING
IT IS A VIOLATION OF SECTION 7209.2 OF THE NEW YORK STATE EDUCATION LAW FOR ANY PERSON, UNLESS ACTING UNDER THE DIRECTION OF A LICENSED PROFESSIONAL ENGINEER, TO ALTER IN ANY WAY PLANS, SPECIFICATIONS, PLATS OR REPORTS TO WHICH THE SEAL OF A PROFESSIONAL ENGINEER HAS BEEN APPLIED. IF AN ITEM BEARING THE SEAL OF A PROFESSIONAL ENGINEER IS ALTERED, THE ALTERING ENGINEER SHALL AFFIX TO THE ITEM HIS SEAL AND THE NOTATION "ALTERED BY" FOLLOWED BY HIS SIGNATURE, THE DATE, AND A SPECIFIC DESCRIPTION OF THE ALTERATION.

FIRE ALARM & SECURITY PLAN - EL 421.00 - AREA 1

3/16" = 1'-0"

REV	ISSUED FOR	DATE	BY

PROJECT ENGINEER:	R. FROST
DESIGNED BY:	Y. ABDALLA
DRAWN BY:	R. CHUNG
CHECKED BY:	G. MARKOU
IF THIS BAR DOES NOT MEASURE 1" THEN DRAWING IS NOT TO FULL SCALE	0 1/2" 1"

BID SET

STATE OF NEW YORK · GEORGE MARKOU · 072603 · LICENSED PROFESSIONAL ENGINEER

Hazen

HAZEN AND SAWYER
498 SEVENTH AVENUE, 11th FLOOR
NEW YORK, NEW YORK 10018

WESTCHESTER JOINT WATER WORKS
MAMARONECK, NY

RYE LAKE WATER FILTRATION PLANT
HARRISON, NY

FILTRATION PLANT
ELECTRICAL
FIRE ALARM & SECURITY PLAN - EL 421.00 - AREA 1

DATE:	FEB 2025
HAZEN NO.:	90388-000
CONTRACT NO.:	A1364-A
DRAWING NUMBER:	E-146

Autodesk Docs://90388-000_Rye_Lake_Filtration/90388-000-WFP-E.rvt
4/15/2025 3:09:04 PM

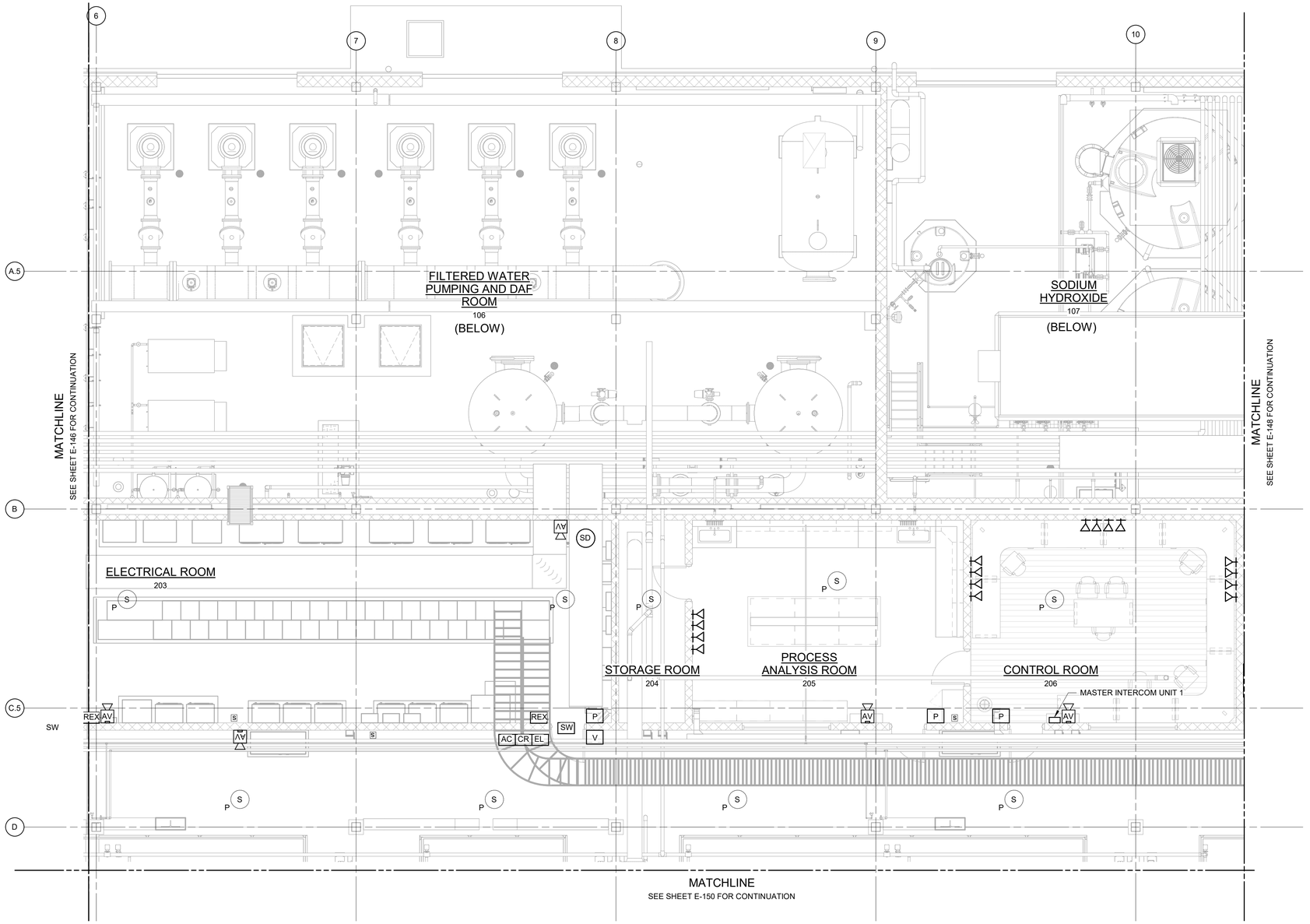

NOTES:

1. REFER TO SPECIFICATION 28 46 20 FOR FIRE ALARM SYSTEM DETAILS.
2. REFER TO SPECIFICATION 28 10 00 FOR SECURITY SYSTEM DETAILS.
3. REFER TO SPECIFICATION 27 51 16 FOR PUBLIC ADDRESS SYSTEM DETAILS.

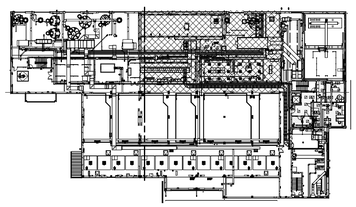

3/16" = 1'-0" 6 4 2 0 5'

FIRE ALARM & SECURITY PLAN - EL 421.00 - AREA 2

3/16" = 1'-0"

WARNING
IT IS A VIOLATION OF SECTION 7209.2 OF THE NEW YORK STATE EDUCATION LAW FOR ANY PERSON, UNLESS ACTING UNDER THE DIRECTION OF A LICENSED PROFESSIONAL ENGINEER, TO ALTER IN ANY WAY PLANS, SPECIFICATIONS, PLATS OR REPORTS TO WHICH THE SEAL OF A PROFESSIONAL ENGINEER HAS BEEN APPLIED. IF AN ITEM BEARING THE SEAL OF A PROFESSIONAL ENGINEER IS ALTERED, THE ALTERING ENGINEER SHALL AFFIX TO THE ITEM HIS SEAL AND THE NOTATION "ALTERED BY" FOLLOWED BY HIS SIGNATURE, THE DATE, AND A SPECIFIC DESCRIPTION OF THE ALTERATION.

REV	ISSUED FOR	DATE	BY

PROJECT ENGINEER:	R. FROST
DESIGNED BY:	Y. ABDALLA
DRAWN BY:	R. CHUNG
CHECKED BY:	G. MARKOU
IF THIS BAR DOES NOT MEASURE 1" THEN DRAWING IS NOT TO FULL SCALE	0 1/2" 1"

BID SET

STATE OF NEW YORK · GEORGE MARKOU · 022603 · LICENSED PROFESSIONAL ENGINEER

Hazen
HAZEN AND SAWYER
498 SEVENTH AVENUE, 11th FLOOR
NEW YORK, NEW YORK 10018

WESTCHESTER JOINT WATER WORKS
MAMARONECK, NY

RYE LAKE WATER FILTRATION PLANT
HARRISON, NY

FILTRATION PLANT
ELECTRICAL
FIRE ALARM & SECURITY PLAN - EL 421.00 - AREA 2

DATE:	FEB 2025
HAZEN NO.:	90388-000
CONTRACT NO.:	A1364-A
DRAWING NUMBER:	E-147

Autodesk Docs://90388-000_Rye_Lake_Filtration/90388-000-WFP-E.rvt
4/15/2025 3:09:09 PM

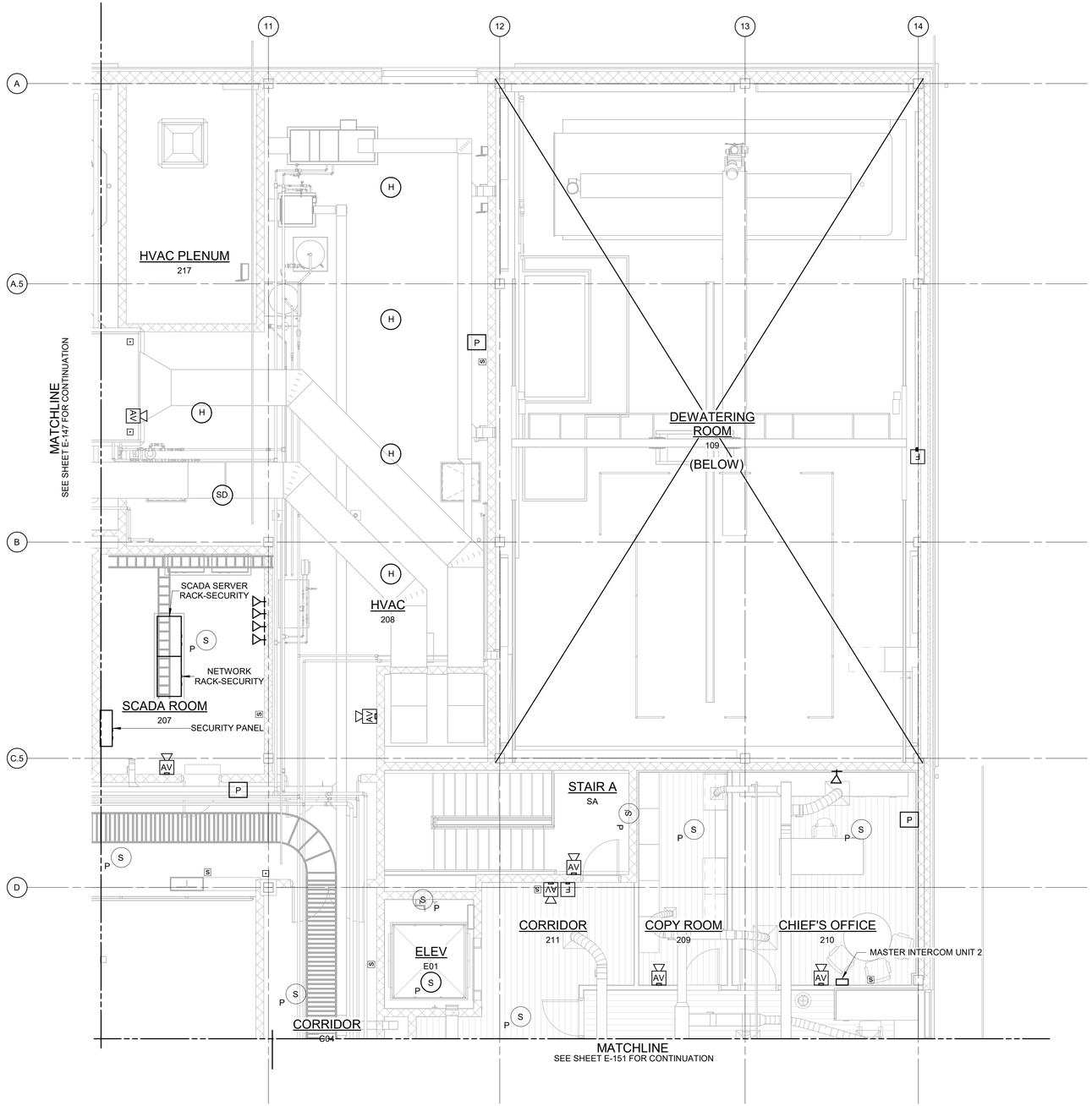

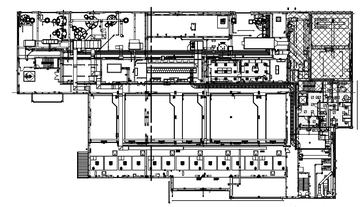

3/16" = 1'-0"

FIRE ALARM & SECURITY PLAN - EL 421.00 - AREA 3

3/16" = 1'-0"

NOTES:

1. REFER TO SPECIFICATION 28 46 20 FOR FIRE ALARM SYSTEM DETAILS.
2. REFER TO SPECIFICATION 28 10 00 FOR SECURITY SYSTEM DETAILS.
3. REFER TO SPECIFICATION 27 51 16 FOR PUBLIC ADDRESS SYSTEM DETAILS.

WARNING
IT IS A VIOLATION OF SECTION 7209.2 OF THE NEW YORK STATE EDUCATION LAW FOR ANY PERSON, UNLESS ACTING UNDER THE DIRECTION OF A LICENSED PROFESSIONAL ENGINEER, TO ALTER IN ANY WAY PLANS, SPECIFICATIONS, PLATS OR REPORTS TO WHICH THE SEAL OF A PROFESSIONAL ENGINEER HAS BEEN APPLIED. IF AN ITEM BEARING THE SEAL OF A PROFESSIONAL ENGINEER IS ALTERED, THE ALTERING ENGINEER SHALL AFFIX TO THE ITEM HIS SEAL AND THE NOTATION "ALTERED BY" FOLLOWED BY HIS SIGNATURE, THE DATE, AND A SPECIFIC DESCRIPTION OF THE ALTERATION.

REV	ISSUED FOR	DATE	BY

PROJECT ENGINEER:	R. FROST
DESIGNED BY:	Y. ABDALLA
DRAWN BY:	R. CHUNG
CHECKED BY:	G. MARKOU
IF THIS BAR DOES NOT MEASURE 1" THEN DRAWING IS NOT TO FULL SCALE	0 1/2" 1"

BID SET

STATE OF NEW YORK · JORGE MARKOU · 072603 · LICENSED PROFESSIONAL ENGINEER

Hazen

HAZEN AND SAWYER
498 SEVENTH AVENUE, 11th FLOOR
NEW YORK, NEW YORK 10018

WESTCHESTER JOINT WATER WORKS
MAMARONECK, NY

RYE LAKE WATER FILTRATION PLANT
HARRISON, NY

FILTRATION PLANT
ELECTRICAL
FIRE ALARM & SECURITY PLAN - EL 421.00 - AREA 3

DATE:	FEB 2025
HAZEN NO.:	90388-000
CONTRACT NO.:	A1364-A
DRAWING NUMBER:	E-148

Autodesk Docs://90388-000_Rye_Lake_Filtration/90388-000-WFP-E.rvt
4/15/2025 3:09:15 PM

N

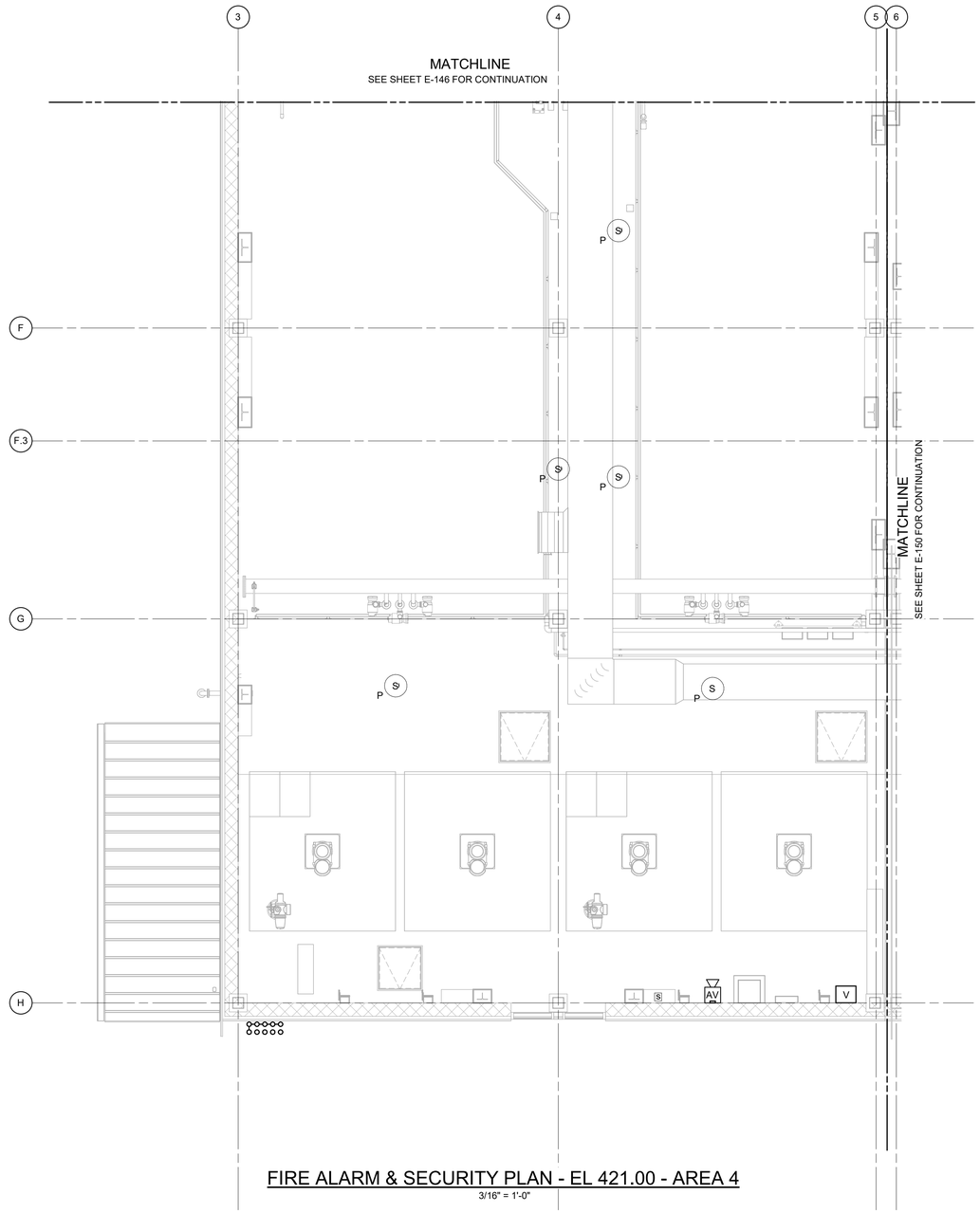

FIRE ALARM & SECURITY PLAN - EL 421.00 - AREA 4

3/16" = 1'-0"

NOTES:

1. REFER TO SPECIFICATION 28 46 20 FOR FIRE ALARM SYSTEM DETAILS.
2. REFER TO SPECIFICATION 28 10 00 FOR SECURITY SYSTEM DETAILS.
3. REFER TO SPECIFICATION 27 51 16 FOR PUBLIC ADDRESS SYSTEM DETAILS.

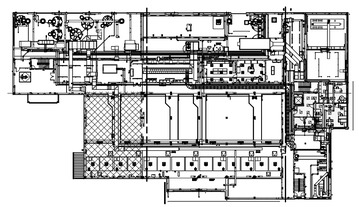

3/16" = 1'-0"

WARNING
IT IS A VIOLATION OF SECTION 7209.2 OF THE NEW YORK STATE EDUCATION LAW FOR ANY PERSON, UNLESS ACTING UNDER THE DIRECTION OF A LICENSED PROFESSIONAL ENGINEER, TO ALTER IN ANY WAY PLANS, SPECIFICATIONS, PLATS OR REPORTS TO WHICH THE SEAL OF A PROFESSIONAL ENGINEER HAS BEEN APPLIED. IF AN ITEM BEARING THE SEAL OF A PROFESSIONAL ENGINEER IS ALTERED, THE ALTERING ENGINEER SHALL AFFIX TO THE ITEM HIS SEAL AND THE NOTATION "ALTERED BY" FOLLOWED BY HIS SIGNATURE, THE DATE, AND A SPECIFIC DESCRIPTION OF THE ALTERATION.

REV	ISSUED FOR	DATE	BY

PROJECT ENGINEER:	R. FROST
DESIGNED BY:	Y. ABDALLA
DRAWN BY:	R. CHUNG
CHECKED BY:	G. MARKOU
IF THIS BAR DOES NOT MEASURE 1" THEN DRAWING IS NOT TO FULL SCALE	0 1/2" 1"

BID SET

STATE OF NEW YORK · GEORGE MARKOU · 072603 · LICENSED PROFESSIONAL ENGINEER

Hazen
HAZEN AND SAWYER
498 SEVENTH AVENUE, 11th FLOOR
NEW YORK, NEW YORK 10018

WESTCHESTER JOINT WATER WORKS
MAMARONECK, NY

RYE LAKE WATER FILTRATION PLANT
HARRISON, NY

FILTRATION PLANT
ELECTRICAL
FIRE ALARM & SECURITY PLAN - EL 421.00 - AREA 4

DATE:	FEB 2025
HAZEN NO.:	90388-000
CONTRACT NO.:	A1364-A
DRAWING NUMBER:	E-149

Autodesk Docs://90388-000_Rye_Lake_Filtration/90388-000-WFP-E.rvt
4/15/2025 3:09:19 PM

MATCHLINE
SEE SHEET E-147 FOR CONTINUATION

MATCHLINE
SEE SHEET E-145 FOR CONTINUATION

MATCHLINE
SEE SHEET E-151 FOR CONTINUATION

NOTES:

1. REFER TO SPECIFICATION 28 46 20 FOR FIRE ALARM SYSTEM DETAILS.
2. REFER TO SPECIFICATION 28 10 00 FOR SECURITY SYSTEM DETAILS.
3. REFER TO SPECIFICATION 27 51 16 FOR PUBLIC ADDRESS SYSTEM DETAILS.

STATIC MIXER AND OVERFLOW
121

RAW WATER PIPING
120

3 (OW)
E-109

FIRE ALARM & SECURITY PLAN - EL 421.00 - AREA 5

3/16" = 1'-0"

3/16" = 1'-0"

WARNING
IT IS A VIOLATION OF SECTION 7209.2 OF THE NEW YORK STATE EDUCATION LAW FOR ANY PERSON, UNLESS ACTING UNDER THE DIRECTION OF A LICENSED PROFESSIONAL ENGINEER, TO ALTER IN ANY WAY PLANS, SPECIFICATIONS, PLATS OR REPORTS TO WHICH THE SEAL OF A PROFESSIONAL ENGINEER HAS BEEN APPLIED. IF AN ITEM BEARING THE SEAL OF A PROFESSIONAL ENGINEER IS ALTERED, THE ALTERING ENGINEER SHALL AFFIX TO THE ITEM HIS SEAL AND THE NOTATION "ALTERED BY" FOLLOWED BY HIS SIGNATURE, THE DATE, AND A SPECIFIC DESCRIPTION OF THE ALTERATION.

REV	ISSUED FOR	DATE	BY

PROJECT ENGINEER:	R. FROST
DESIGNED BY:	Y. ABDALLA
DRAWN BY:	R. CHUNG
CHECKED BY:	G. MARKOU

IF THIS BAR DOES NOT MEASURE 1" THEN DRAWING IS NOT TO FULL SCALE (0, 1/2", 1")

BID SET

STATE OF NEW YORK · GEORGE MARKOU · 072603 · LICENSED PROFESSIONAL ENGINEER

Hazen
HAZEN AND SAWYER
498 SEVENTH AVENUE, 11th FLOOR
NEW YORK, NEW YORK 10018

WESTCHESTER JOINT WATER WORKS
MAMARONECK, NY

RYE LAKE WATER FILTRATION PLANT
HARRISON, NY

FILTRATION PLANT
ELECTRICAL
FIRE ALARM & SECURITY PLAN - EL 421.00 - AREA 5

DATE:	FEB 2025
HAZEN NO.:	90388-000
CONTRACT NO.:	A1364-A
DRAWING NUMBER:	E-150

Autodesk Docs://90388-000_Rye_Lake_Filtration/90388-000-WFP-E.rvt
4/15/2025 3:09:25 PM

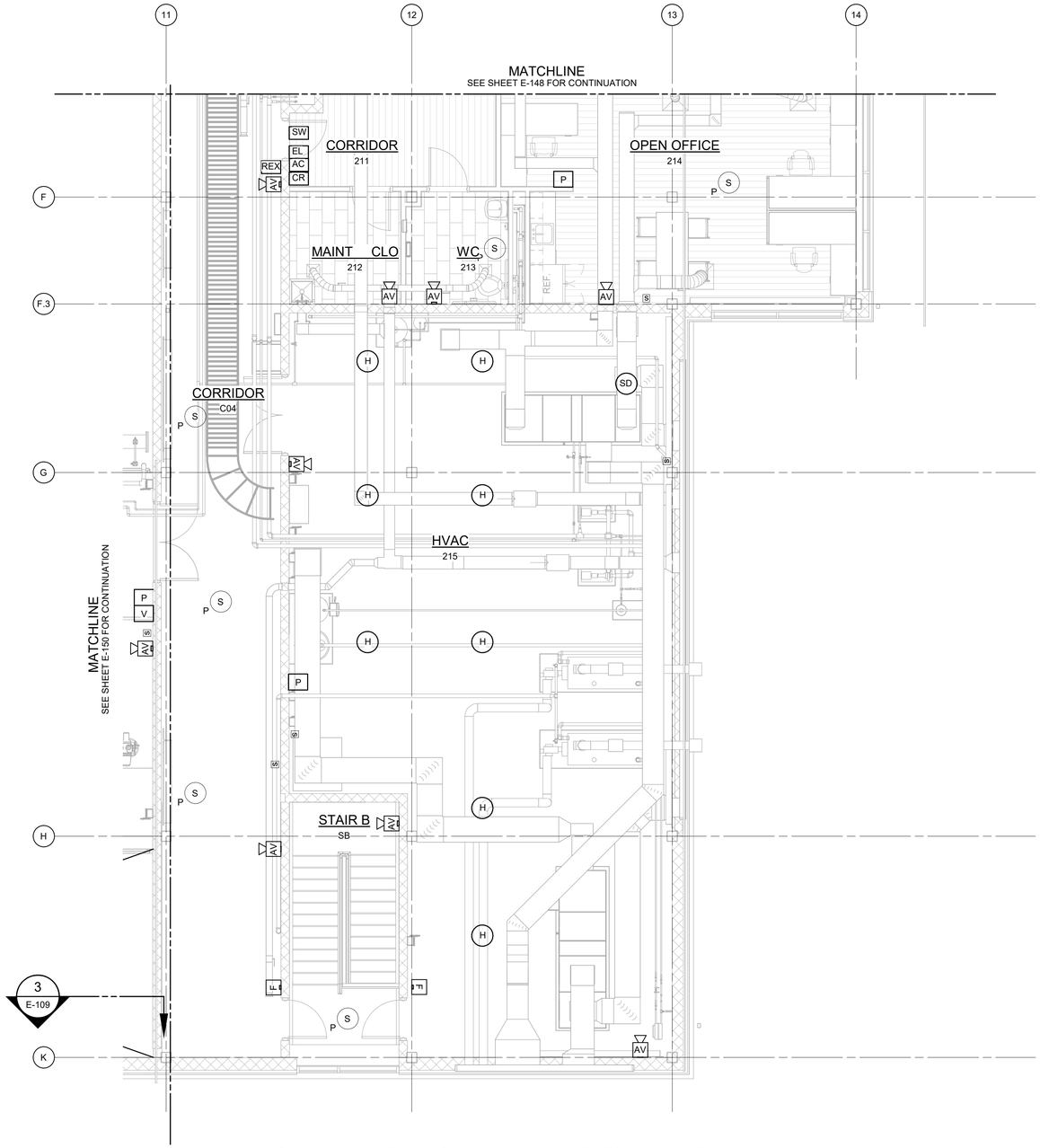

FIRE ALARM & SECURITY PLAN - EL 421.00 - AREA 6

3/16" = 1'-0"

NOTES:

1. REFER TO SPECIFICATION 28 46 20 FOR FIRE ALARM SYSTEM DETAILS.
2. REFER TO SPECIFICATION 28 10 00 FOR SECURITY SYSTEM DETAILS.
3. REFER TO SPECIFICATION 27 51 16 FOR PUBLIC ADDRESS SYSTEM DETAILS.

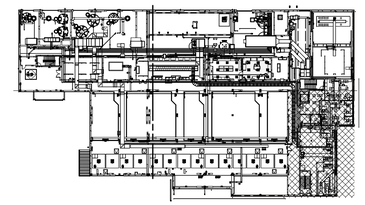

6 4 2 0 5'

3/16" = 1'-0"

WARNING
IT IS A VIOLATION OF SECTION 7209.2 OF THE NEW YORK STATE EDUCATION LAW FOR ANY PERSON, UNLESS ACTING UNDER THE DIRECTION OF A LICENSED PROFESSIONAL ENGINEER, TO ALTER IN ANY WAY PLANS, SPECIFICATIONS, PLATS OR REPORTS TO WHICH THE SEAL OF A PROFESSIONAL ENGINEER HAS BEEN APPLIED. IF AN ITEM BEARING THE SEAL OF A PROFESSIONAL ENGINEER IS ALTERED, THE ALTERING ENGINEER SHALL AFFIX TO THE ITEM HIS SEAL AND THE NOTATION "ALTERED BY" FOLLOWED BY HIS SIGNATURE, THE DATE, AND A SPECIFIC DESCRIPTION OF THE ALTERATION.

REV	ISSUED FOR	DATE	BY

PROJECT ENGINEER:	R. FROST
DESIGNED BY:	Y. ABDALLA
DRAWN BY:	R. CHUNG
CHECKED BY:	G. MARKOU

IF THIS BAR DOES NOT MEASURE 1" THEN DRAWING IS NOT TO FULL SCALE 0 1/2" 1"

BID SET

STATE OF NEW YORK — GEORGE MARKOU — 022603 — LICENSED PROFESSIONAL ENGINEER

Hazen
HAZEN AND SAWYER
498 SEVENTH AVENUE, 11th FLOOR
NEW YORK, NEW YORK 10018

WESTCHESTER JOINT WATER WORKS
MAMARONECK, NY

RYE LAKE WATER FILTRATION PLANT
HARRISON, NY

FILTRATION PLANT
ELECTRICAL
FIRE ALARM & SECURITY PLAN - EL 421.00 - AREA 6

DATE:	FEB 2025
HAZEN NO.:	90388-000
CONTRACT NO.:	A1364-A
DRAWING NUMBER:	E-151

Autodesk Docs://90388-000_Rye_Lake_Filtration/90388-000-WFP-E.rvt
4/15/2025 3:09:29 PM

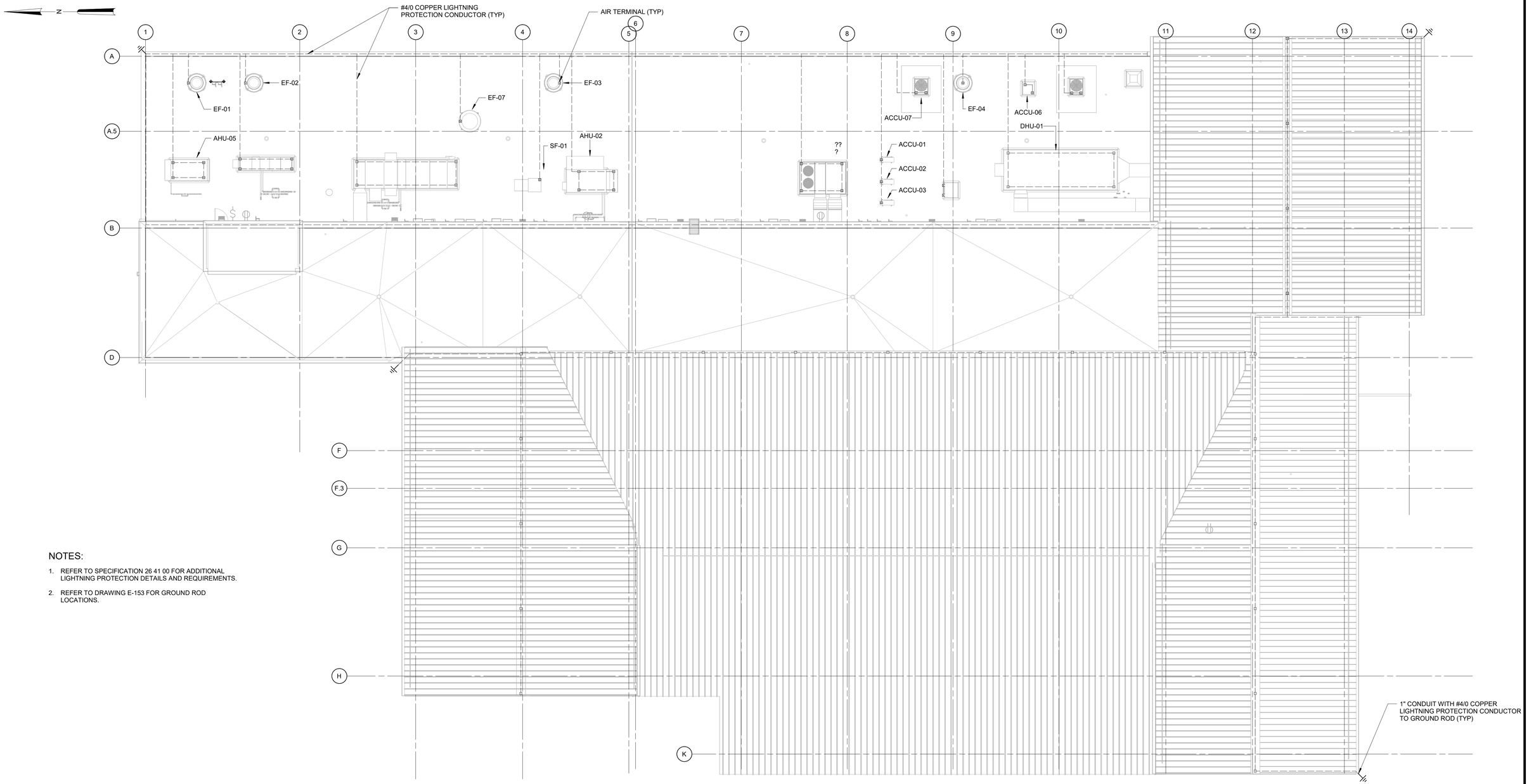

NOTES:

1. REFER TO SPECIFICATION 26 41 00 FOR ADDITIONAL LIGHTNING PROTECTION DETAILS AND REQUIREMENTS.
2. REFER TO DRAWING E-153 FOR GROUND ROD LOCATIONS.

LIGHTNING PROTECTION PLAN

3/32" = 1'-0"

WARNING
IT IS A VIOLATION OF SECTION 7209.2 OF THE NEW YORK STATE EDUCATION LAW FOR ANY PERSON, UNLESS ACTING UNDER THE DIRECTION OF A LICENSED PROFESSIONAL ENGINEER, TO ALTER IN ANY WAY PLANS, SPECIFICATIONS, PLATS OR REPORTS TO WHICH THE SEAL OF A PROFESSIONAL ENGINEER HAS BEEN APPLIED. IF AN ITEM BEARING THE SEAL OF A PROFESSIONAL ENGINEER IS ALTERED, THE ALTERING ENGINEER SHALL AFFIX TO THE ITEM HIS SEAL AND THE NOTATION "ALTERED BY" FOLLOWED BY HIS SIGNATURE, THE DATE, AND A SPECIFIC DESCRIPTION OF THE ALTERATION.

REV	ISSUED FOR	DATE	BY

PROJECT ENGINEER:	R. FROST
DESIGNED BY:	Y. ABDALLA
DRAWN BY:	R. CHUNG
CHECKED BY:	G. MARKOU
IF THIS BAR DOES NOT MEASURE 1" THEN DRAWING IS NOT TO FULL SCALE	0 1/2" 1"

BID SET

STATE OF NEW YORK — JORGE MARKOU — 072603 — LICENSED PROFESSIONAL ENGINEER

Hazen
HAZEN AND SAWYER
498 SEVENTH AVENUE, 11th FLOOR
NEW YORK, NEW YORK 10018

WESTCHESTER JOINT WATER WORKS
MAMARONECK, NY

RYE LAKE WATER FILTRATION PLANT
HARRISON, NY

FILTRATION PLANT
ELECTRICAL
LIGHTNING PROTECTION PLAN

DATE:	FEB 2025
HAZEN NO.:	90388-000
CONTRACT NO.:	A1364-A
DRAWING NUMBER:	E-152

Autodesk Docs://90388-000_Rye_Lake_Filtration/90388-000-WFP-E.rvt
4/15/2025 3:09:31 PM

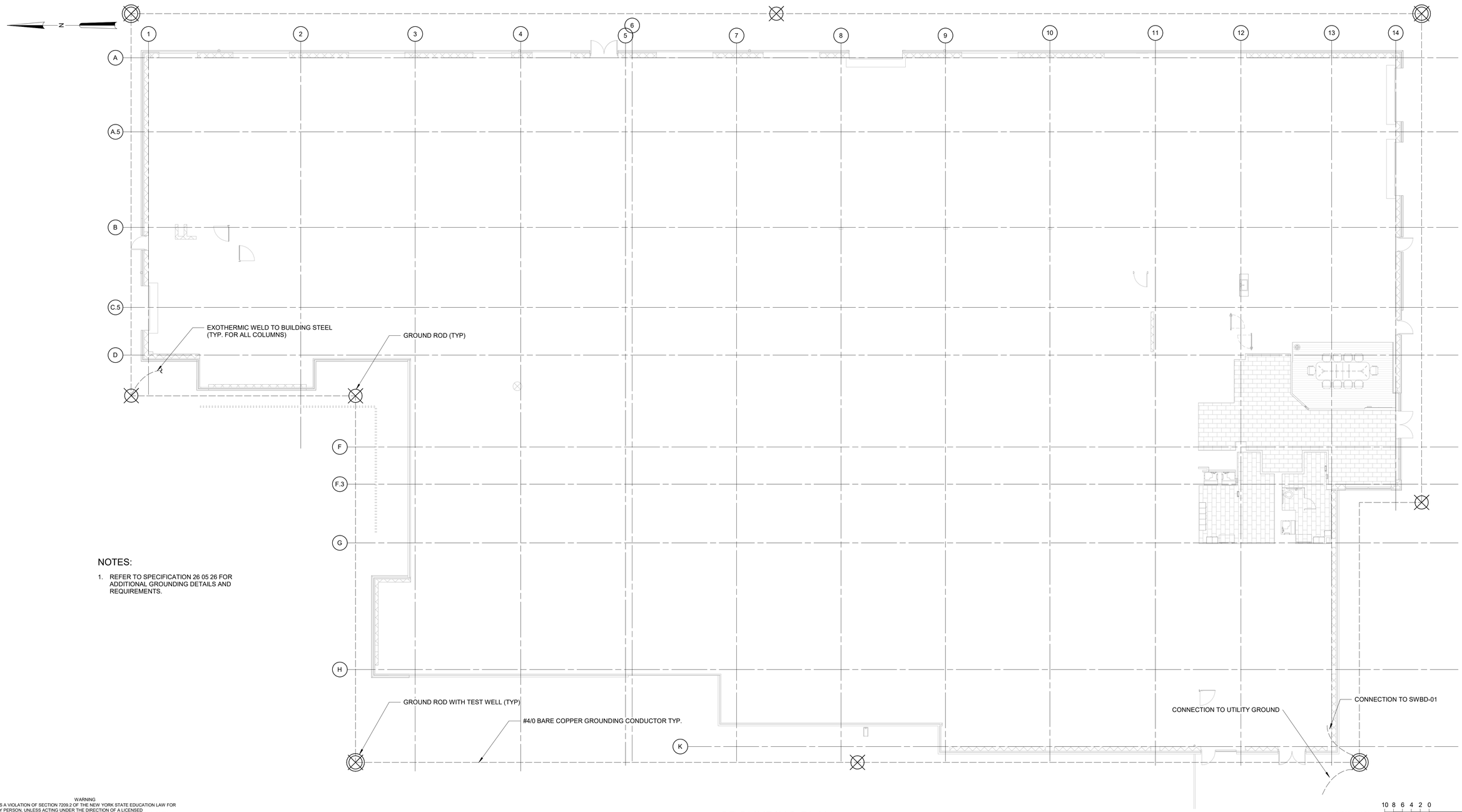

NOTES:

1. REFER TO SPECIFICATION 26 05 26 FOR ADDITIONAL GROUNDING DETAILS AND REQUIREMENTS.

GROUNDING PLAN

3/32" = 1'-0"

3/32" = 1'-0" 10 8 6 4 2 0 11'

WARNING
IT IS A VIOLATION OF SECTION 7209.2 OF THE NEW YORK STATE EDUCATION LAW FOR ANY PERSON, UNLESS ACTING UNDER THE DIRECTION OF A LICENSED PROFESSIONAL ENGINEER, TO ALTER IN ANY WAY PLANS, SPECIFICATIONS, PLATS OR REPORTS TO WHICH THE SEAL OF A PROFESSIONAL ENGINEER HAS BEEN APPLIED. IF AN ITEM BEARING THE SEAL OF A PROFESSIONAL ENGINEER IS ALTERED, THE ALTERING ENGINEER SHALL AFFIX TO THE ITEM HIS SEAL AND THE NOTATION "ALTERED BY" FOLLOWED BY HIS SIGNATURE, THE DATE, AND A SPECIFIC DESCRIPTION OF THE ALTERATION.

REV	ISSUED FOR	DATE	BY

PROJECT ENGINEER:	R. FROST
DESIGNED BY:	Y. ABDALLA
DRAWN BY:	R. CHUNG
CHECKED BY:	G. MARKOU

IF THIS BAR DOES NOT MEASURE 1" THEN DRAWING IS NOT TO FULL SCALE 0 1/2" 1"

BID SET

STATE OF NEW YORK · GEORGE MARKOU · 022603 · LICENSED PROFESSIONAL ENGINEER

Hazen

HAZEN AND SAWYER
498 SEVENTH AVENUE, 11th FLOOR
NEW YORK, NEW YORK 10018

WESTCHESTER JOINT WATER WORKS
MAMARONECK, NY

RYE LAKE WATER FILTRATION PLANT
HARRISON, NY

FILTRATION PLANT
ELECTRICAL
GROUNDING PLAN

DATE:	FEB 2025
HAZEN NO.:	90388-000
CONTRACT NO.:	A1364-A
DRAWING NUMBER:	E-153

Autodesk Docs://90388-000_Rye_Lake_Filtration/90388-000-WFP-E.rvt
4/15/2025 3:09:32 PM

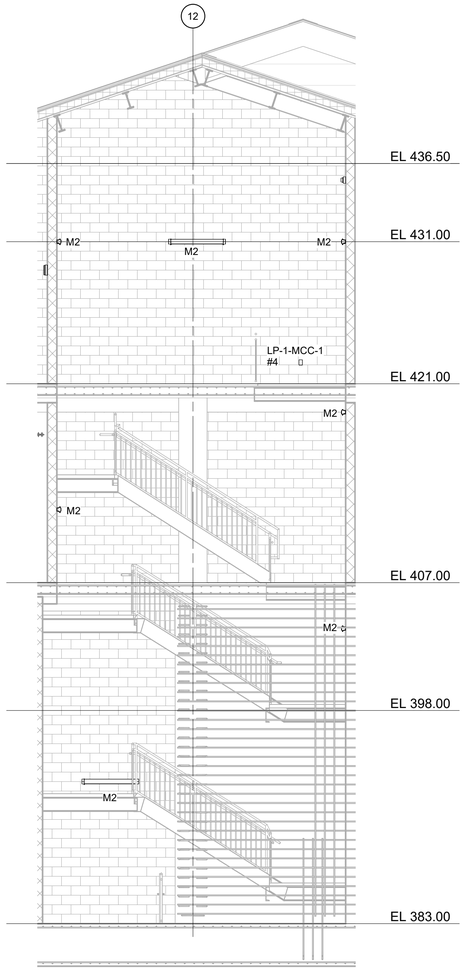

STAIR A - EAST

3/16" = 1'-0"

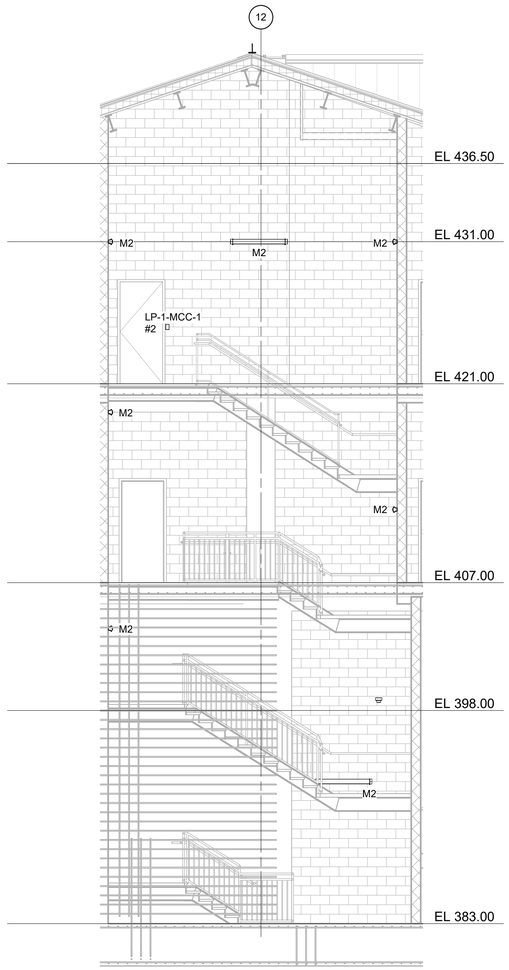

STAIR A - WEST

3/16" = 1'-0"

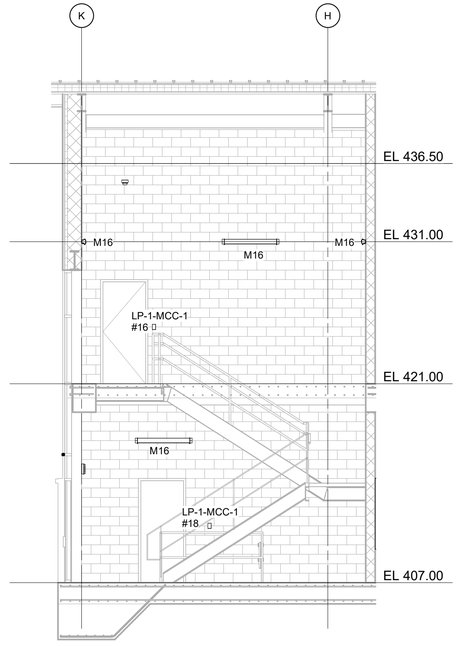

STAIR B - NORTH

3/16" = 1'-0"

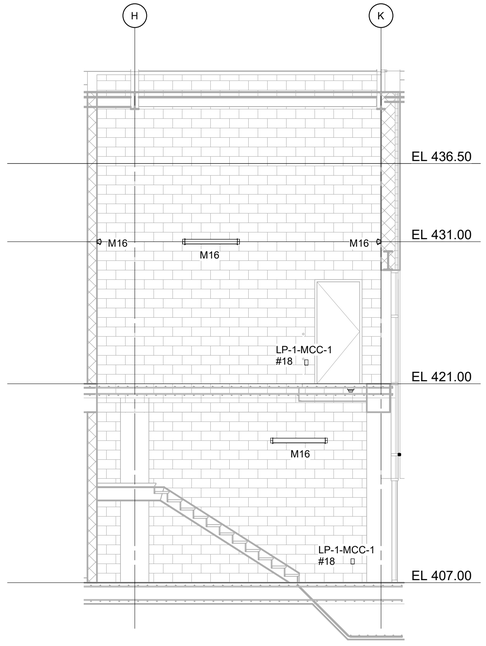

STAIR B - SOUTH

3/16" = 1'-0"

NOTES:

1. REFER TO SPECIFICATION 26 50 00 FOR LIGHTING FIXTURE SCHEDULE.
2. REFER TO DRAWINGS E-012 TO E-017 FOR PANELBOARD SCHEDULES.

WARNING
IT IS A VIOLATION OF SECTION 7209.2 OF THE NEW YORK STATE EDUCATION LAW FOR ANY PERSON, UNLESS ACTING UNDER THE DIRECTION OF A LICENSED PROFESSIONAL ENGINEER, TO ALTER IN ANY WAY PLANS, SPECIFICATIONS, PLATS OR REPORTS TO WHICH THE SEAL OF A PROFESSIONAL ENGINEER HAS BEEN APPLIED. IF AN ITEM BEARING THE SEAL OF A PROFESSIONAL ENGINEER IS ALTERED, THE ALTERING ENGINEER SHALL AFFIX TO THE ITEM HIS SEAL AND THE NOTATION "ALTERED BY" FOLLOWED BY HIS SIGNATURE, THE DATE, AND A SPECIFIC DESCRIPTION OF THE ALTERATION.

REV	ISSUED FOR	DATE	BY

PROJECT ENGINEER:	R. FROST
DESIGNED BY:	Y. ABDALLA
DRAWN BY:	P. NUGENT
CHECKED BY:	G. MARKOU

IF THIS BAR DOES NOT MEASURE 1" THEN DRAWING IS NOT TO FULL SCALE 0 1/2" 1"

BID SET

STATE OF NEW YORK · GEORGE MARKOU · 072603 · LICENSED PROFESSIONAL ENGINEER

Hazen

HAZEN AND SAWYER
498 SEVENTH AVENUE, 11th FLOOR
NEW YORK, NEW YORK 10018

WESTCHESTER JOINT WATER WORKS
MAMARONECK, NY

RYE LAKE WATER FILTRATION PLANT
HARRISON, NY

FILTRATION PLANT
ELECTRICAL
STAIRCASE SECTIONS - SHEET 1

DATE:	FEB 2025
HAZEN NO.:	90388-000
CONTRACT NO.:	A1364-A
DRAWING NUMBER:	E-201

Autodesk Docs://90388-000_Rye_Lake_Filtration/90388-000-WFP-E.rvt
4/15/2025 3:09:35 PM

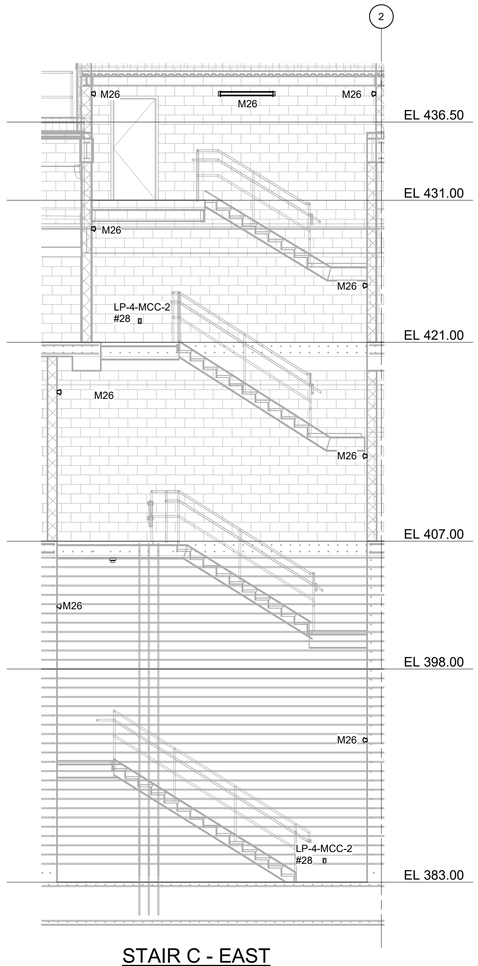

STAIR C - EAST

3/16" = 1'-0"

NOTES:

1. REFER TO SPECIFICATION 26 50 00 FOR LIGHTING FIXTURE SCHEDULE.
2. REFER TO DRAWINGS E-012 TO E-017 FOR PANELBOARD SCHEDULES.

WARNING
IT IS A VIOLATION OF SECTION 7209.2 OF THE NEW YORK STATE EDUCATION LAW FOR ANY PERSON, UNLESS ACTING UNDER THE DIRECTION OF A LICENSED PROFESSIONAL ENGINEER, TO ALTER IN ANY WAY PLANS, SPECIFICATIONS, PLATS OR REPORTS TO WHICH THE SEAL OF A PROFESSIONAL ENGINEER HAS BEEN APPLIED. IF AN ITEM BEARING THE SEAL OF A PROFESSIONAL ENGINEER IS ALTERED, THE ALTERING ENGINEER SHALL AFFIX TO THE ITEM HIS SEAL AND THE NOTATION "ALTERED BY" FOLLOWED BY HIS SIGNATURE, THE DATE, AND A SPECIFIC DESCRIPTION OF THE ALTERATION.

REV	ISSUED FOR	DATE	BY

PROJECT ENGINEER:	R. FROST
DESIGNED BY:	Y. ABDALLA
DRAWN BY:	P. NUGENT
CHECKED BY:	G. MARKOU
IF THIS BAR DOES NOT MEASURE 1" THEN DRAWING IS NOT TO FULL SCALE	0 1/2" 1"

BID SET

STATE OF NEW YORK · GEORGE MARKOU · 072603 · LICENSED PROFESSIONAL ENGINEER

Hazen
HAZEN AND SAWYER
498 SEVENTH AVENUE, 11th FLOOR
NEW YORK, NEW YORK 10018

WESTCHESTER JOINT WATER WORKS
MAMARONECK, NY

RYE LAKE WATER FILTRATION PLANT
HARRISON, NY

FILTRATION PLANT
ELECTRICAL
STAIRCASE SECTIONS - SHEET 2

DATE:	FEB 2025
HAZEN NO.:	90388-000
CONTRACT NO.:	A1364-A
DRAWING NUMBER:	E-202

Autodesk Docs://90388-000_Rye_Lake_Filtration/90388-000-WFP-E.rvt
4/15/2025 3:09:35 PM

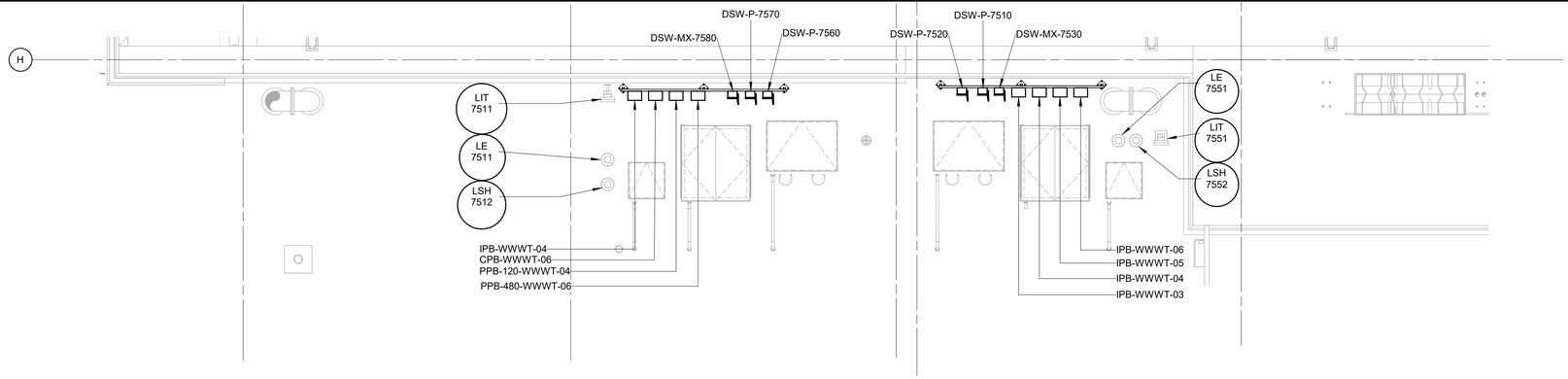

POWER PLAN EL. 407.00 - WASTE WASHWATER TANK

3/16" = 1'-0"

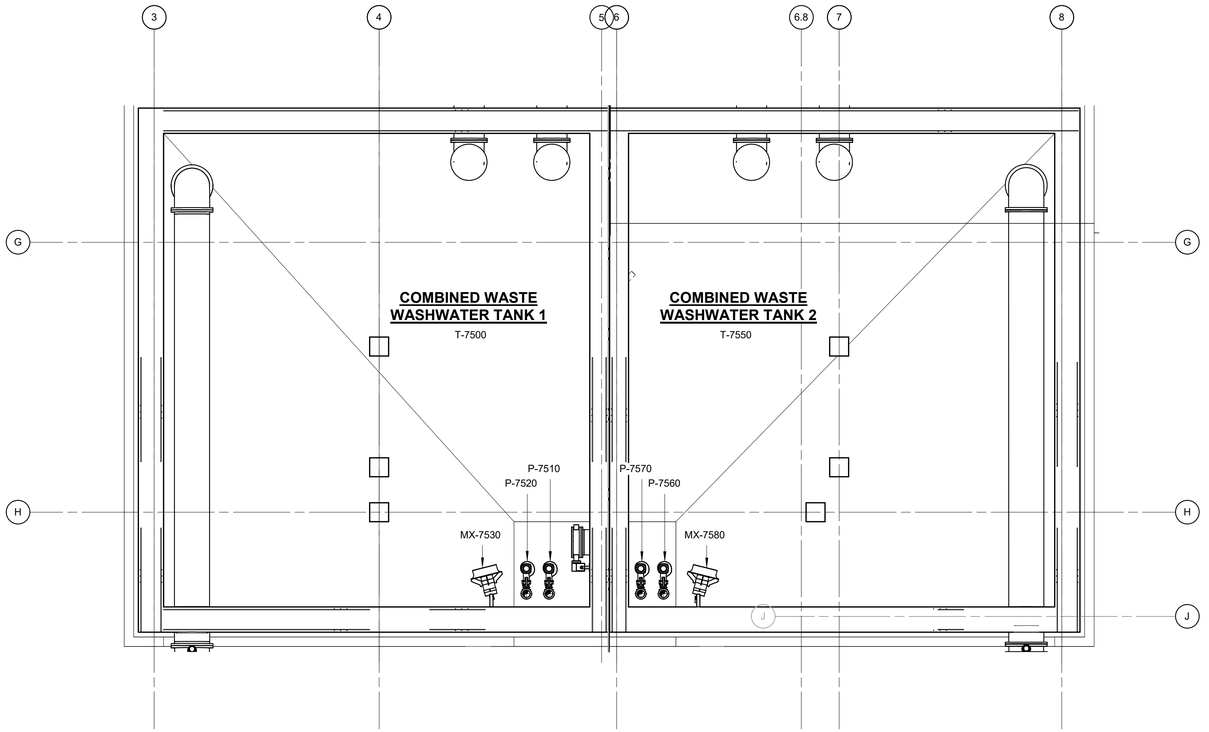

POWER PLAN EL. 400.00 - WASTE WASHWATER TANKS - 400.00

1/8" = 1'-0"

1/8" = 1'-0" 8 6 4 2 0 8'

WARNING
IT IS A VIOLATION OF SECTION 7209.2 OF THE NEW YORK STATE EDUCATION LAW FOR ANY PERSON, UNLESS ACTING UNDER THE DIRECTION OF A LICENSED PROFESSIONAL ENGINEER, TO ALTER IN ANY WAY PLANS, SPECIFICATIONS, PLATS OR REPORTS TO WHICH THE SEAL OF A PROFESSIONAL ENGINEER HAS BEEN APPLIED. IF AN ITEM BEARING THE SEAL OF A PROFESSIONAL ENGINEER IS ALTERED, THE ALTERING ENGINEER SHALL AFFIX TO THE ITEM HIS SEAL AND THE NOTATION "ALTERED BY" FOLLOWED BY HIS SIGNATURE, THE DATE, AND A SPECIFIC DESCRIPTION OF THE ALTERATION.

REV	ISSUED FOR	DATE	BY

PROJECT ENGINEER:	R. FROST
DESIGNED BY:	Y. ABDALLA
DRAWN BY:	A. PENA
CHECKED BY:	G. MARKOU
IF THIS BAR DOES NOT MEASURE 1" THEN DRAWING IS NOT TO FULL SCALE	0 1/2" 1"

BID SET

STATE OF NEW YORK — GEORGE MARKOU — 072603 — LICENSED PROFESSIONAL ENGINEER

Hazen
HAZEN AND SAWYER
498 SEVENTH AVENUE, 11th FLOOR
NEW YORK, NEW YORK 10018

WESTCHESTER JOINT WATER WORKS
MAMARONECK, NY

RYE LAKE WATER FILTRATION PLANT
HARRISON, NY

WASTE WASHEWATER TANK
ELECTRICAL
WASTE WASHWATER TANK - POWER PLAN

DATE:	FEB 2025
HAZEN NO.:	90388-000
CONTRACT NO.:	A1364-A
DRAWING NUMBER:	E-501

Autodesk Docs://90388-000_Rye_Lake_Filtration/90388-000-WFP-E.rvt
4/15/2025 3:09:38 PM

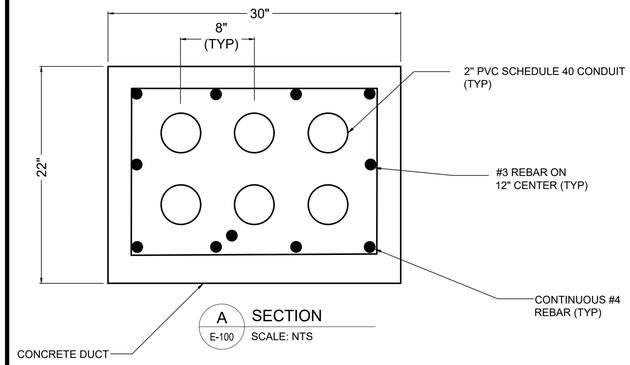

A SECTION
E-100 SCALE: NTS

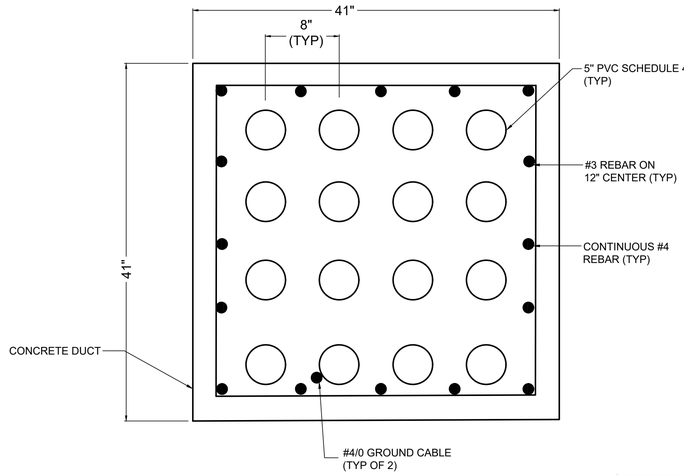

B SECTION
E-100 SCALE: NTS

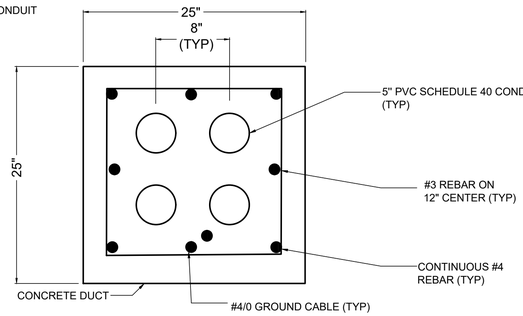

C SECTION
E-100 SCALE: NTS

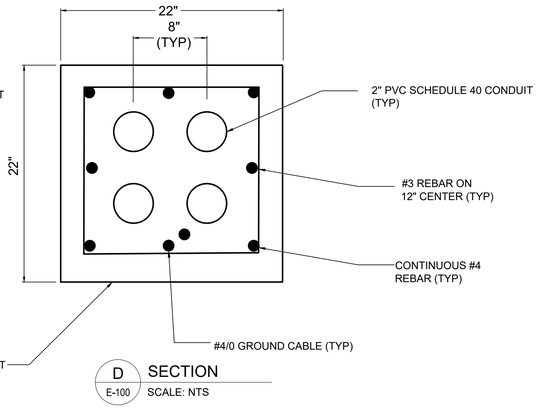

D SECTION
E-100 SCALE: NTS

E SECTION
E-100 SCALE: NTS

F SECTION
E-100 SCALE: NTS

G SECTION
E-100 SCALE: NTS

H SECTION
E-100 SCALE: NTS

I SECTION
E-100 SCALE: NTS

J SECTION
E-100 SCALE: NTS

K SECTION
E-100 SCALE: NTS

WARNING
IT IS A VIOLATION OF SECTION 7209.2 OF THE NEW YORK STATE EDUCATION LAW FOR ANY PERSON, UNLESS ACTING UNDER THE DIRECTION OF A LICENSED PROFESSIONAL ENGINEER, TO ALTER IN ANY WAY PLANS, SPECIFICATIONS, PLATS OR REPORTS TO WHICH THE SEAL OF A PROFESSIONAL ENGINEER HAS BEEN APPLIED. IF AN ITEM BEARING THE SEAL OF A PROFESSIONAL ENGINEER IS ALTERED, THE ALTERING ENGINEER SHALL AFFIX TO THE ITEM HIS SEAL AND THE NOTATION "ALTERED BY" FOLLOWED BY HIS SIGNATURE, THE DATE, AND A SPECIFIC DESCRIPTION OF THE ALTERATION.

REV	ISSUED FOR	DATE	BY

PROJECT ENGINEER:	R. FROST
DESIGNED BY:	Y. ABDALLA
DRAWN BY:	Y. ABDALLA
CHECKED BY:	G. MARKOU

IF THIS BAR DOES NOT MEASURE 1" THEN DRAWING IS NOT TO FULL SCALE 0 1/2" 1"

BID SET

Hazen
HAZEN AND SAWYER
498 SEVENTH AVENUE, 11th FLOOR
NEW YORK, NEW YORK 10018

WESTCHESTER JOINT WATER WORKS
MAMARONECK, NY

RYE LAKE WATER FILTRATION PLANT
HARRISON, NY

ELECTRICAL
DUCT BANK DETAILS

DATE:	FEB 2025
HAZEN NO.:	90388-000
CONTRACT NO.:	A1364-A
DRAWING NUMBER:	E-601

File: C:\USERS\APENA\DOCACCDOCS\HAZEN AND SAWYER\90388-000_RYE_LAKE_FILTRATION\PROJECT FILES\PROJECTWISE\ELECTRICAL\E-601 Saved by APENA Save date: 4/14/2025 9:45 AM BY: APENA
PLOT DATE: 4/15/2025 3:47 PM

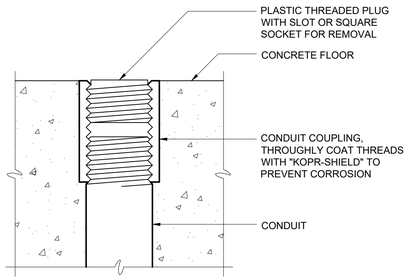

FLOOR STUB-UP FOR FUTURE CONDUIT

E-26-0101

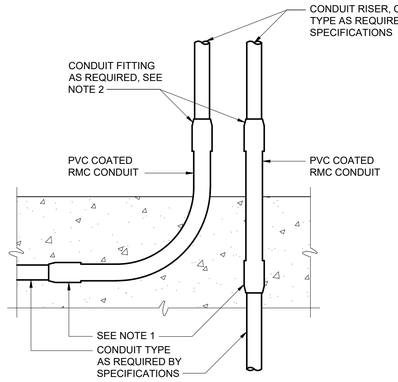

NOTES:

1. FOR ENCASED PVC CONDUIT USE PVC TERMINAL ADAPTER. FOR ALL OTHER CONDUIT TYPES, USE PVC COATED RMC COUPLINGS.
2. IF ANY THREADS OF THE PVC COATED RMC CONDUIT ARE EXPOSED AFTER INSTALLATION OF THE CONDUIT FITTING, THE CONDUIT FITTING SHALL BE PVC COATED TYPE WITH APPROPRIATE PVC SKIRTS. IF THE THREADS OF THE PVC COATED RMC CONDUIT ARE PROPERLY CUT SO THAT THEY ARE NOT EXPOSED AFTER INSTALLATION OF THE CONDUIT FITTING, THE CONDUIT MATERIAL SHALL BE AS REQUIRED BY THE SPECIFICATIONS, BASED ON THE MATERIAL OF THE CONDUIT RISER.

CONDUIT EXITING CONCRETE ENCASEMENT

E-26-0102

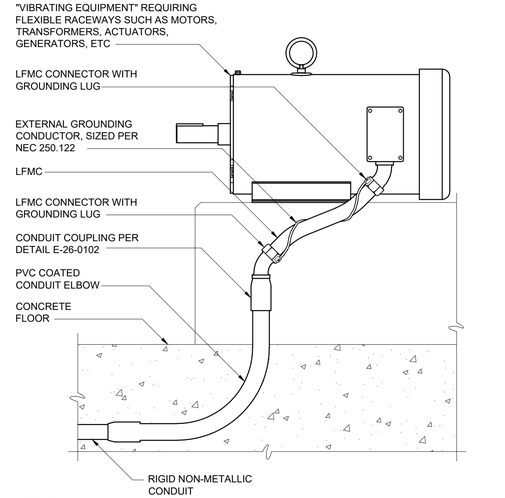

NOTES:

1. WHERE NON-METALLIC CONDUIT TRANSITIONS TO RIGID METALLIC CONDUIT AND / OR LIQUIDTIGHT FLEXIBLE METALLIC CONDUIT, (LFMC), TO FEED VIBRATING TYPE LOADS, THE CONTRACTOR SHALL FURNISH AND INSTALL AN EXTERNAL BARE COPPER GROUNDING CONDUCTOR AND APPROVED GROUNDING LFMC CONNECTORS TO ENSURE GROUND CONTINUITY TO THE RIGID METALLIC CONDUIT AS SHOWN. THE GROUNDING CONDUCTOR SHALL BE SIZED ACCORDING TO NEC 250.122 AND BE NEATLY WRAPPED AROUND LFMC AS SHOWN. LFMC INSTALLED IN THIS MANNER CANNOT BE USED FOR A CONTINUOUS GROUND PATH PER NEC 350.60.

LFMC CONDUIT GROUND STRAP

E-26-0104

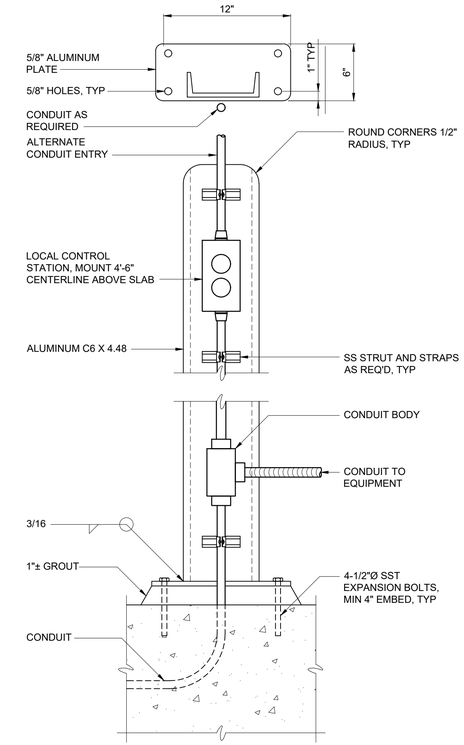

ELEVATION

NOTES:

1. COAT ALUMINUM SURFACES IN CONTACT WITH CONCRETE PER SPECIFICATIONS.
2. CONSTRUCT 1'-2" DIAMETER X 2'-6" DEEP FOUNDATION WHERE MOUNTING SURFACE IS NOT AVAILABLE.
3. USE SST WASHERS, NUTS AND BOLTS FOR MOUNTING DEVICES.

TYPICAL LOCAL CONTROL STATION

E-26-0401

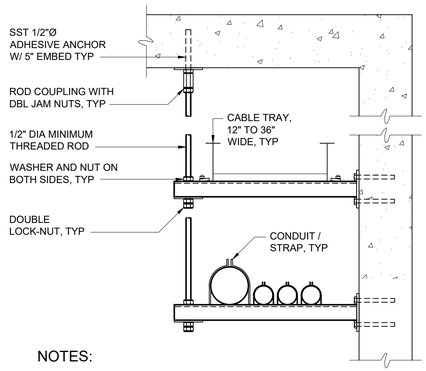

NOTES:

1. SPACE SUPPORTS AT 5'-0" MAXIMUM. HANGER SPACING SHALL BE BASED ON MAXIMUM LOAD.
2. ALL THREAD ROD SHALL BE USED ONLY FOR DUAL TRAY.
3. REFER TO AREA DESIGNATION DRAWINGS AND SPECIFICATIONS FOR REQUIRED MATERIALS OF CONSTRUCTION.
4. STRUT SHALL BE 12 GAUGE MINIMUM.

WALL MOUNTED RACEWAY SUPPORT RACK

E-26-0202

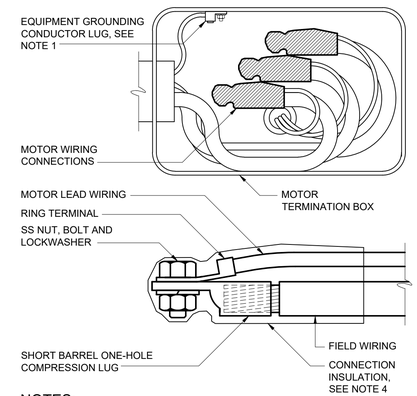

NOTES:

1. EQUIPMENT GROUNDING CONDUCTOR LUG SHALL BE ATTACHED WITH NUT AND LOCKWASHER TO THE MOTOR GROUNDING STUD. WHERE PROVIDED, FACTORY INSTALLED EQUIPMENT GROUNDING CONDUCTOR LUGS ARE ACCEPTABLE IN LIEU OF THE FIELD INSTALLED EQUIPMENT GROUNDING CONDUCTOR LUG.
2. RING TERMINALS ON MOTOR LEADS SHALL BE FACTORY INSTALLED BY THE MOTOR MANUFACTURER.
3. INSTALL SHORT BARREL COMPRESSION CONNECTOR ON FIELD WIRING WITH MANUFACTURER'S RECOMMENDED COMPRESSION TOOL AND CRIMPING DIE. CONNECTORS SHALL HAVE SMOOTHLY ROUNDED EDGES.
4. HEAT SHRINK OR COLD APPLIED CONNECTOR INSULATION LISTED FOR THE PURPOSE AND AS SPECIFIED.

LOW VOLTAGE MOTOR TERMINATION

E-26-0301

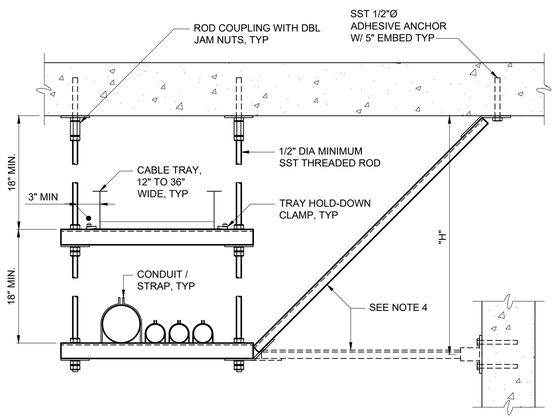

NOTES:

1. SPACE SUPPORTS AT 5'-0" MAXIMUM. HANGER SPACING SHALL BE BASED ON MAXIMUM LOAD.
2. ALL THREAD ROD SHALL BE USED ONLY FOR DUAL TRAYS / RACKS.
3. REFER TO AREA DESIGNATION DRAWINGS AND SPECIFICATIONS FOR REQUIRED MATERIALS OF CONSTRUCTION.
4. PREFORMED BRACING CHANNEL AT 30'-0" SPACING MAX. BRACE AT INTERMEDIATE LEVEL WHEN "H" DIMENSION EXCEEDS 6'-0".
5. STRUT SHALL BE 12 GAUGE MINIMUM.

SUSPENDED RACEWAY SUPPORT RACK

E-26-0201

WARNING
IT IS A VIOLATION OF SECTION 7209.2 OF THE NEW YORK STATE EDUCATION LAW FOR ANY PERSON, UNLESS ACTING UNDER THE DIRECTION OF A LICENSED PROFESSIONAL ENGINEER, TO ALTER IN ANY WAY PLANS, SPECIFICATIONS, PLATS OR REPORTS TO WHICH THE SEAL OF A PROFESSIONAL ENGINEER HAS BEEN AFFIXED. IF AN ITEM BEARING THE SEAL OF A PROFESSIONAL ENGINEER IS ALTERED, THE ALTERING ENGINEER SHALL AFFIX TO THE ITEM HIS SEAL AND THE NOTATION "ALTERED BY" FOLLOWED BY HIS SIGNATURE, THE DATE, AND A SPECIFIC DESCRIPTION OF THE ALTERATION.

REV	ISSUED FOR	DATE	BY

PROJECT ENGINEER:	R. FROST
DESIGNED BY:	Y. ABDALLA
DRAWN BY:	Y. ABDALLA
CHECKED BY:	G. MARKOU

IF THIS BAR DOES NOT MEASURE 1" THEN DRAWING IS NOT TO FULL SCALE — 0 1/2" 1"

BID SET

STATE OF NEW YORK — GEORGE MARKOU — 072603 — LICENSED PROFESSIONAL ENGINEER

Hazen

HAZEN AND SAWYER
498 SEVENTH AVENUE, 11th FLOOR
NEW YORK, NEW YORK 10018

WESTCHESTER JOINT WATER WORKS
MAMARONECK, NY

RYE LAKE WATER FILTRATION PLANT
HARRISON, NY

ELECTRICAL
STANDARD DETAILS - SHEET 1

DATE:	FEB 2025
HAZEN NO.:	90388-000
CONTRACT NO.:	A1364-A
DRAWING NUMBER:	E-602

File: C:\USERS\APENA\DOCUMENTS\HAZEN AND SAWYER\90388-000_RYE_LAKE_FILTRATION\PROJECT FILES\PROJECTWISE\ELECTRICAL\E-602 Saved by APENA Save date: 4/14/2025 9:42 AM
PLOT DATE: 4/15/2025 3:47 PM BY: APENA

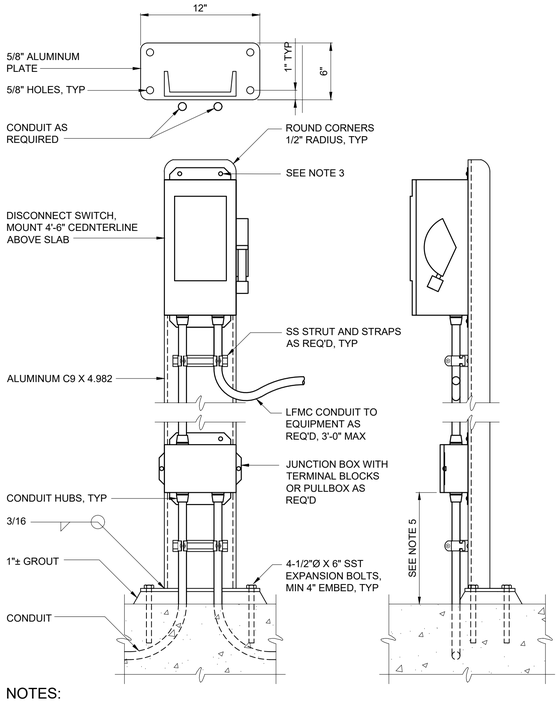

NOTES:

1. COAT ALUMINUM SURFACES IN CONTACT WITH CONCRETE PER SPECIFICATIONS.
2. CONSTRUCT 1'-2" DIAMETER X 2'-6" DEEP FOUNDATION WHERE MOUNTING SURFACE IS NOT AVAILABLE.
3. USE SST WASHERS, LOCKWASHERS, NUTS AND BOLTS FOR MOUNTING EQUIPMENT AND STRUT SUPPORTS TO CHANNEL. DRILL EQUIPMENT MOUNTING TABS AS NECESSARY TO COORDINATE WITH CHANNEL WIDTH.
4. REFERENCE STANDARD DETAIL E-26-0102 WHERE CONDUIT EMERGES FROM CONCRETE.
5. COORDINATE MOUNTING HEIGHT ABOVE CONCRETE WITH AREA CLASSIFICATION REQUIREMENTS.

30 AND 60 AMP DISCONNECT SWITCH

E-26-0403

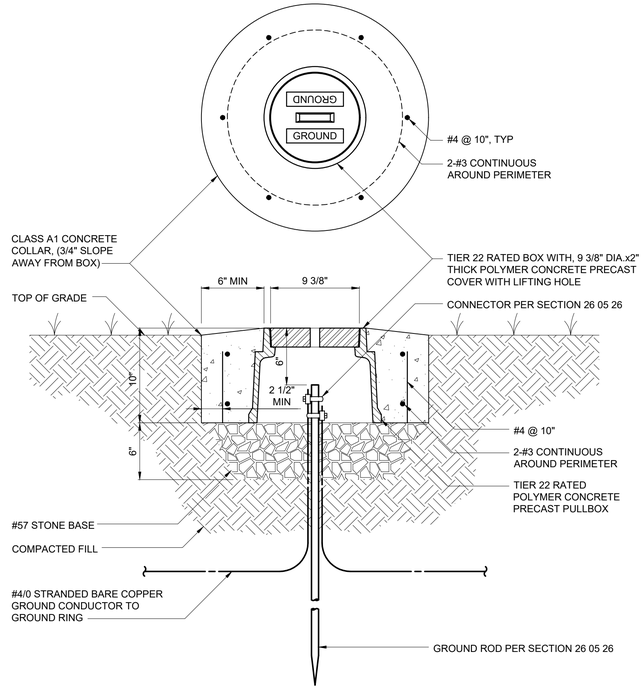

NOTES:

1. PRECAST PULLBOX AND COVER SHALL BE OLDCASTLE PART NUMBER 09101187, OR APPROVED EQUAL.

GROUND ROD TEST WELL

E-26-0501

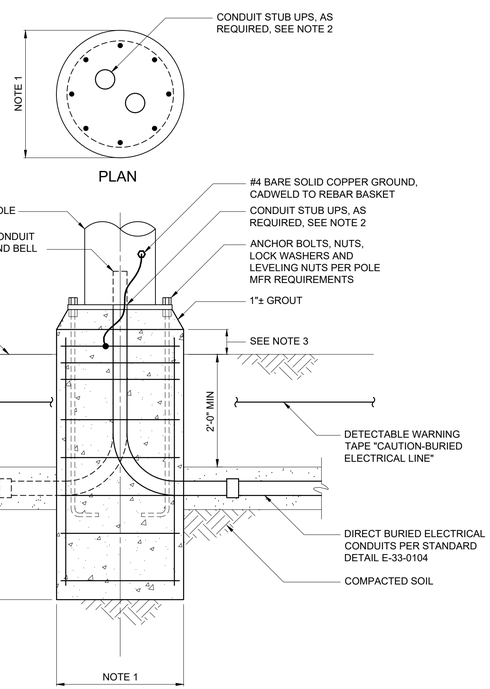

NOTES:

1. DIAMETER, DEPTH AND REINFORCEMENT SHALL BE DETERMINED BY POLE MANUFACTURER IN ACCORDANCE WITH SECTION 26 50 00. LOADING SHALL BE IN ACCORDANCE WITH SECTION 26 50 00.
2. CONTRACTOR SHALL CAREFULLY COORDINATE LOCATION AND QUANTITY OF CONDUITS IN THE BASE SO THAT WHEN POLE IS INSTALLED, IT WILL FIT OVER THE CONDUITS.
3. PROJECTED HEIGHT ABOVE GRADE SHALL BE AS DESCRIBED IN THE POLE SCHEDULE IN 26 50 00.

POLE-MOUNTED LIGHTING FIXTURE BASE

E-26-0601

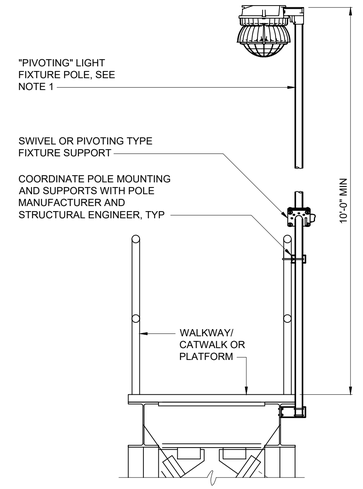

NOTES:

1. INSTALL PIVOTING LIGHT FIXTURE POLE PER MANUFACTURER'S REQUIREMENTS. ORIENT POLE SUCH THAT PIVOTED POSITION OF FIXTURE IS OVER CATWALK/WALKWAY OR PLATFORM. THOUGH A PIVOTING POLE IS SHOWN FOR REFERENCE, THIS DETAIL ALSO APPLIES TO ALTERNATE TYPES OF COLLAPSIBLE POLES (E.G. TELESCOPING) WHERE SPECIFIED IN SECTION 26 50 00.
2. POLE AND FIXTURE SHALL BE AS SPECIFIED IN SECTION 26 50 00.

WALKWAY OR PLATFORM POLE MOUNTED FIXTURE

E-26-0604

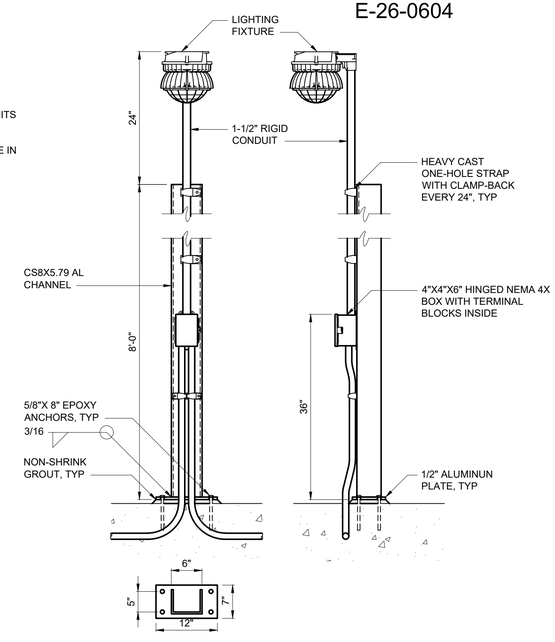

STANCHION MOUNTED LIGHT FIXTURE (CHANNEL BASE)

E-26-0603

WARNING
IT IS A VIOLATION OF SECTION 7209.2 OF THE NEW YORK STATE EDUCATION LAW FOR ANY PERSON, UNLESS ACTING UNDER THE DIRECTION OF A LICENSED PROFESSIONAL ENGINEER, TO ALTER IN ANY WAY PLANS, SPECIFICATIONS, PLATS OR REPORTS TO WHICH THE SEAL OF A PROFESSIONAL ENGINEER HAS BEEN APPLIED. IF AN ITEM BEARING THE SEAL OF A PROFESSIONAL ENGINEER IS ALTERED, THE ALTERING ENGINEER SHALL AFFIX TO THE ITEM HIS SEAL AND THE NOTATION "ALTERED BY" FOLLOWED BY HIS SIGNATURE, THE DATE, AND A SPECIFIC DESCRIPTION OF THE ALTERATION.

REV	ISSUED FOR	DATE	BY

PROJECT ENGINEER:	R. FROST
DESIGNED BY:	Y. ABDALLA
DRAWN BY:	Y. ABDALLA
CHECKED BY:	G. MARKOU
IF THIS BAR DOES NOT MEASURE 1" THEN DRAWING IS NOT TO FULL SCALE	0 1/2" 1"

BID SET

STATE OF NEW YORK GEORGE MARKOU 072603 LICENSED PROFESSIONAL ENGINEER

Hazen
HAZEN AND SAWYER
498 SEVENTH AVENUE, 11th FLOOR
NEW YORK, NEW YORK 10018

WESTCHESTER JOINT WATER WORKS
MAMARONECK, NY

RYE LAKE WATER FILTRATION PLANT
HARRISON, NY

ELECTRICAL
STANDARD DETAILS - SHEET 2

DATE:	FEB 2025
HAZEN NO.:	90388-000
CONTRACT NO.:	A1364-A
DRAWING NUMBER:	E-603

File: C:\USERS\APENA\DOCACCDOCS\HAZEN AND SAWYER\90388-000_RYE_LAKE_FILTRATION\PROJECT FILES\PROJECTWISE\ELECTRICAL\E-603 Saved by APENA Save date: 4/14/2025 9:42 AM
PLOT DATE: 4/15/2025 3:48 PM BY: APENA

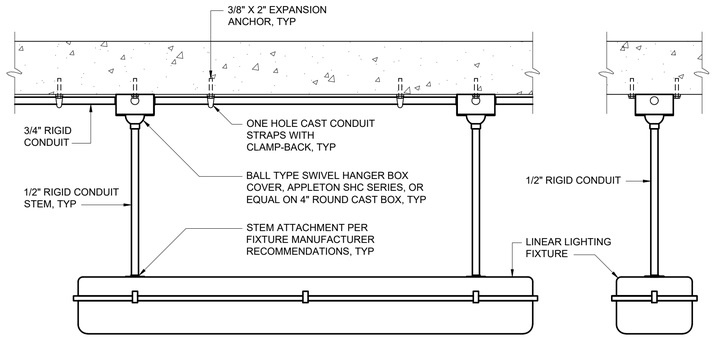

NOTES:

1. ADDITIONAL SEISMIC SUPPORTS MAY BE REQUIRED, SEE CODE SUMMARY DRAWING AND DRAWING E1 FOR SEISMIC CLASSIFICATIONS.
2. CONDUIT TYPE AND MATERIALS OF CONSTRUCTION FOR SUPPORTS AND HARDWARE SHALL BE AS REQUIRED FOR THE AREA IN WHICH THE FIXTURE IS INSTALLED AS SHOWN ON THE DRAWINGS AND IN ACCORDANCE WITH THE SPECIFICATIONS.
3. REFER TO AREA DESIGNATION DRAWINGS AND SPECIFICATIONS FOR REQUIRED MATERIALS OF CONSTRUCTION.

INDIVIDUAL PENDANT MOUNTED LINEAR FIXTURE

E-26-0605

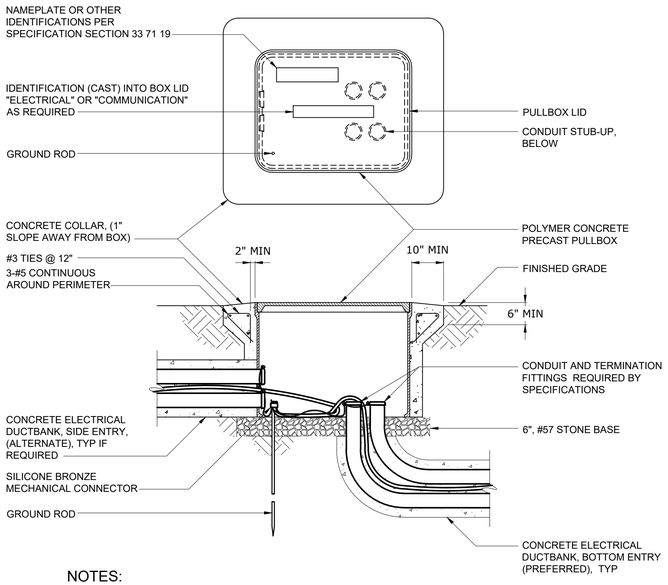

NOTES:

1. FOR SIDE ENTRY, CONDUIT DUCTBANK SHALL ENTER PULLBOX AT LOWEST POINT.
2. GROUND CONDUCTORS WITHIN DUCTBANK SHALL BE BOLTED TOGETHER AND TO GROUND ROD.
3. CONDUIT BONDING BUSHINGS (IF REQUIRED) SHALL BE BONDED TO GROUND ROD.
4. FOR SIDE ENTRY, CONDUIT SHALL ENTER IN INDIVIDUAL CIRCULAR HOLES APPROPRIATELY SIZED FOR THE CONDUIT. LARGE SINGLE RECTANGULAR OPENINGS FOR MULTIPLE CONDUITS ARE NOT ACCEPTABLE
5. DUCTBANK REINFORCING REBAR SHALL PENETRATE THE SIDEWALLS OF THE BOX NO LONGER THAN 1".

POLYMER CONCRETE ELECTRICAL HANDHOLE

E-33-0103

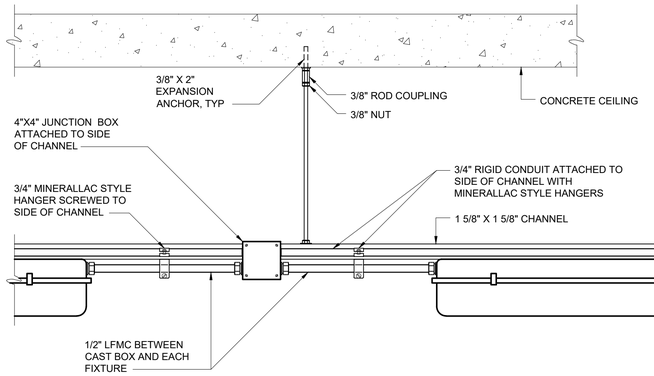

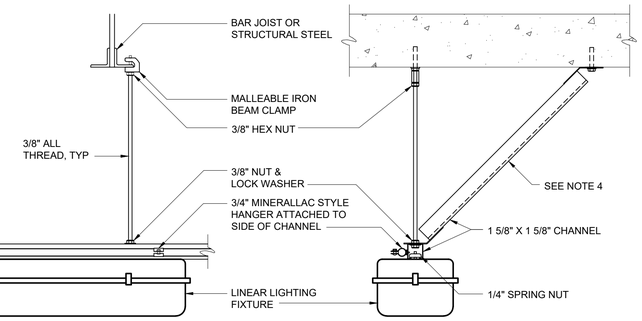

NOTES:

1. ADDITIONAL SEISMIC SUPPORTS MAY BE REQUIRED, SEE CODE SUMMARY DRAWING AND DRAWING E1 FOR SEISMIC CLASSIFICATIONS.
2. CONDUIT TYPE AND MATERIALS OF CONSTRUCTION FOR SUPPORTS AND HARDWARE SHALL BE AS REQUIRED FOR THE AREA IN WHICH THE FIXTURE IS INSTALLED AS SHOWN ON THE DRAWINGS AND IN ACCORDANCE WITH THE SPECIFICATIONS.
3. REFER TO AREA DESIGNATION DRAWINGS AND SPECIFICATIONS FOR REQUIRED MATERIALS OF CONSTRUCTION.
4. 45 DEGREE ANGLE BRACES SHALL BE INSTALLED TO PREVENT LATERAL MOVEMENT OF FIXTURE SUPPORTS. BRACES SHALL BE INSTALLED AT 8' INTERVALS ALONG ENTIRE LENGTH OF SUPPORT CHANNEL. TRANSVERSE MOVEMENT SHALL BE PREVENTED IN SIMILAR FASHION AT EACH END OF THE SUPPORT CHANNEL.

SUPPORT CHANNEL MOUNTED LINEAR FIXTURES

E-26-0606

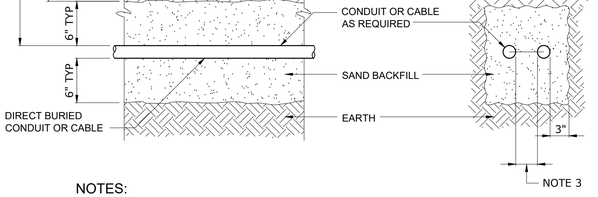

NOTES:

1. CONDUIT SHALL BE FURNISHED AND INSTALLED IN ACCORDANCE WITH SPECIFICATION SECTION 26 05 33.13.
2. BACKFILL THAT CONTAINS LARGE ROCKS, PAVING MATERIALS, CINDERS, LARGE OR SHARPLY ANGULAR SUBSTANCES, OR CORROSIVE MATERIAL SHALL NOT BE USED.
3. MAINTAIN A MINIMUM OF 2" BETWEEN POWER, CONTROL, AND INSTRUMENTATION CONDUITS OR CONDUCTORS.

TYPICAL DIRECT BURIED CONDUIT & CABLE

E-33-0104

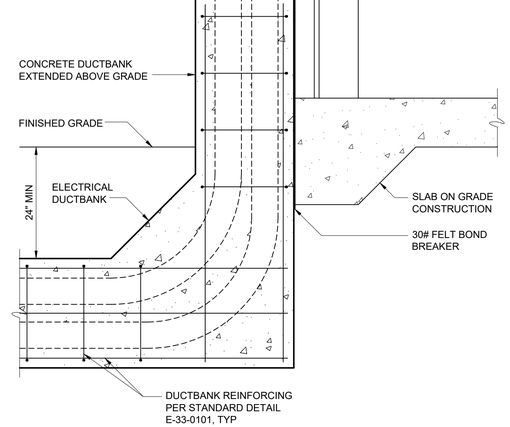

DUCTBANK ABUTMENT (FLOATING) TO STRUCTURE

E-33-0108

WARNING
IT IS A VIOLATION OF SECTION 7209.2 OF THE NEW YORK STATE EDUCATION LAW FOR ANY PERSON, UNLESS ACTING UNDER THE DIRECTION OF A LICENSED PROFESSIONAL ENGINEER, TO ALTER IN ANY WAY PLANS, SPECIFICATIONS, PLATS OR REPORTS TO WHICH THE SEAL OF A PROFESSIONAL ENGINEER HAS BEEN APPLIED. IF AN ITEM BEARING THE SEAL OF A PROFESSIONAL ENGINEER IS ALTERED, THE ALTERING ENGINEER SHALL AFFIX TO THE ITEM HIS SEAL AND THE NOTATION "ALTERED BY" FOLLOWED BY HIS SIGNATURE, THE DATE, AND A SPECIFIC DESCRIPTION OF THE ALTERATION.

REV	ISSUED FOR	DATE	BY

PROJECT ENGINEER:	R. FROST
DESIGNED BY:	Y. ABDALLA
DRAWN BY:	Y. ABDALLA
CHECKED BY:	G. MARKOU

IF THIS BAR DOES NOT MEASURE 1" THEN DRAWING IS NOT TO FULL SCALE — 0 1/2" 1"

BID SET

STATE OF NEW YORK — GEORGE MARKOU — 072603 — LICENSED PROFESSIONAL ENGINEER

Hazen

HAZEN AND SAWYER
498 SEVENTH AVENUE, 11th FLOOR
NEW YORK, NEW YORK 10018

WESTCHESTER JOINT WATER WORKS
MAMARONECK, NY

RYE LAKE WATER FILTRATION PLANT
HARRISON, NY

ELECTRICAL
STANDARD DETAILS - SHEET 3

DATE:	FEB 2025
HAZEN NO.:	90388-000
CONTRACT NO.:	A1364-A
DRAWING NUMBER:	E-604

File: C:\USERS\APENA\DCACCDOCS\HAZEN AND SAWYER\90388-000_RYE_LAKE_FILTRATION\PROJECT FILES\PROJECTWISE\ELECTRICAL\E-604 Saved by APENA Save date: 4/14/2025 9:42 AM
PLOT DATE: 4/15/2025 3:48 PM BY: APENA

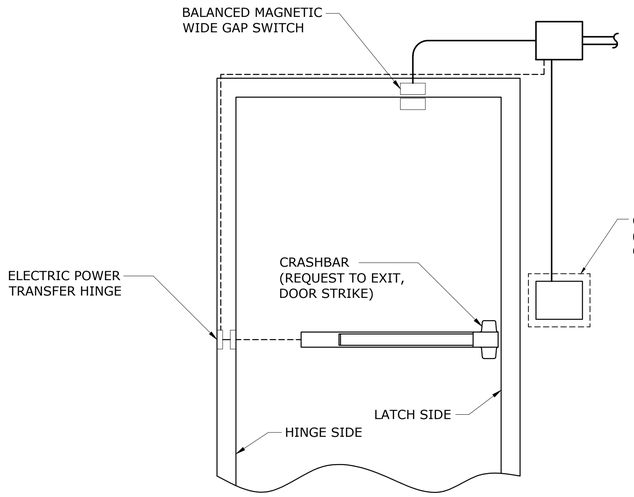

1 E-133 SINGLE DOOR - SECURE SIDE - PANIC BAR TYPE

SCALE: NTS

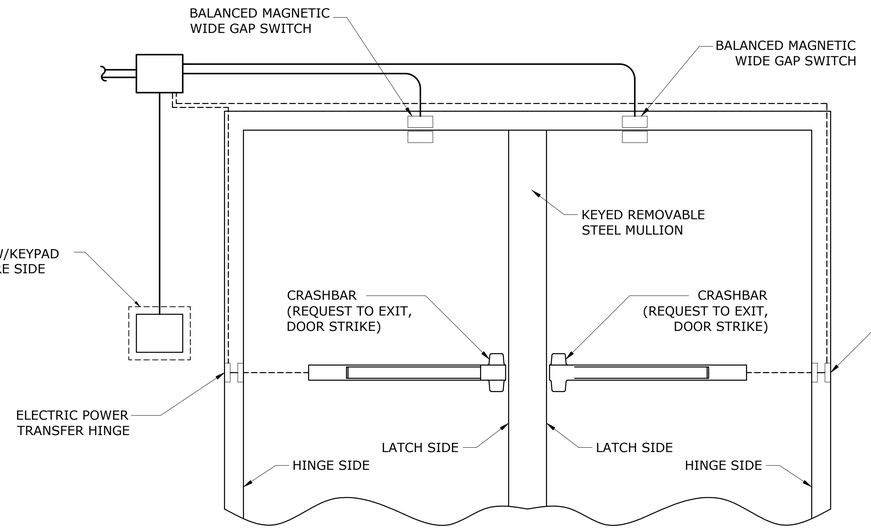

2 E-134 DOUBLE DOOR - SECURE SIDE - PANIC BAR TYPE

SCALE: NTS

NOTE: CARD READER, REQUEST TO EXIT, ELECTRIC POWER TRANSFER HINGE, AND DOOR STRIKE TO BE INSTALLED AS INDICATED IN THE DRAWINGS. MAGNETIC SWITCH TO BE INSTALLED ON ALL EXTERIOR DOORS.

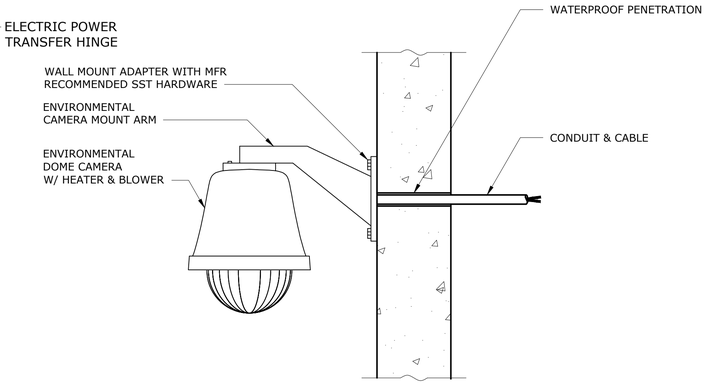

3 E-133 WALL MOUNT DOME CAMERA

SCALE: NTS

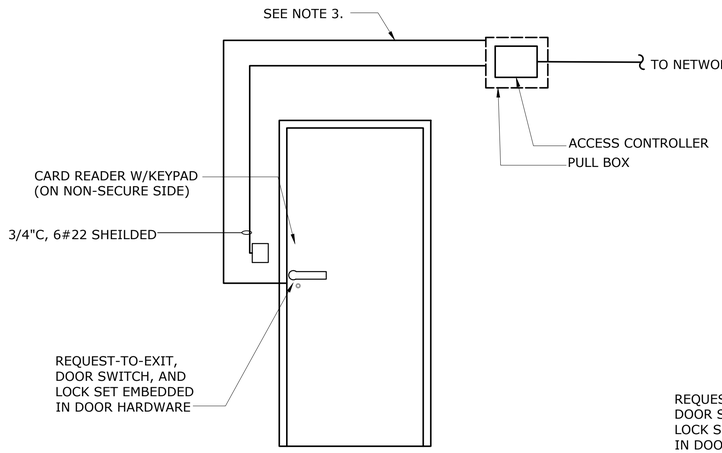

4 E-133 SINGLE DOOR - SECURE SIDE - OPERATING HANDLE TYPE

SCALE: NTS

NOTES:

1. FOR DOORS THAT ONLY HAVE MONITOR SWITCHES, TERMINATE MONITOR SWITCH CABLES AT THE EXPANSION MODULE IN THE SECURITY PANEL.
2. DOORS WITH MONITOR SWITCHES ONLY SHALL HAVE EXTERNAL DOOR CONTACTS.
3. FOR CABLE AND CONDUIT REQUIREMENTS, SEE DRAWING E-024.

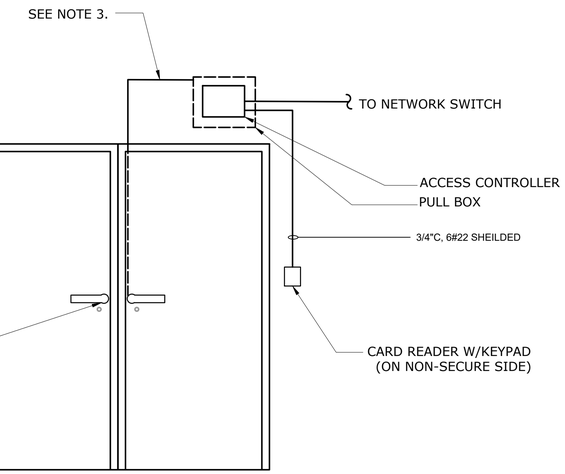

5 E-133 SINGLE DOOR - SECURE SIDE - OPERATING HANDLE TYPE

SCALE: NTS

NOTES:

1. FOR DOORS THAT ONLY HAVE MONITOR SWITCHES, TERMINATE MONITOR SWITCH CABLES AT THE EXPANSION MODULE IN THE SECURITY PANEL.
2. DOORS WITH MONITOR SWITCHES ONLY SHALL HAVE EXTERNAL DOOR CONTACTS.
3. FOR CABLE AND CONDUIT REQUIREMENTS, SEE DRAWING E-024.

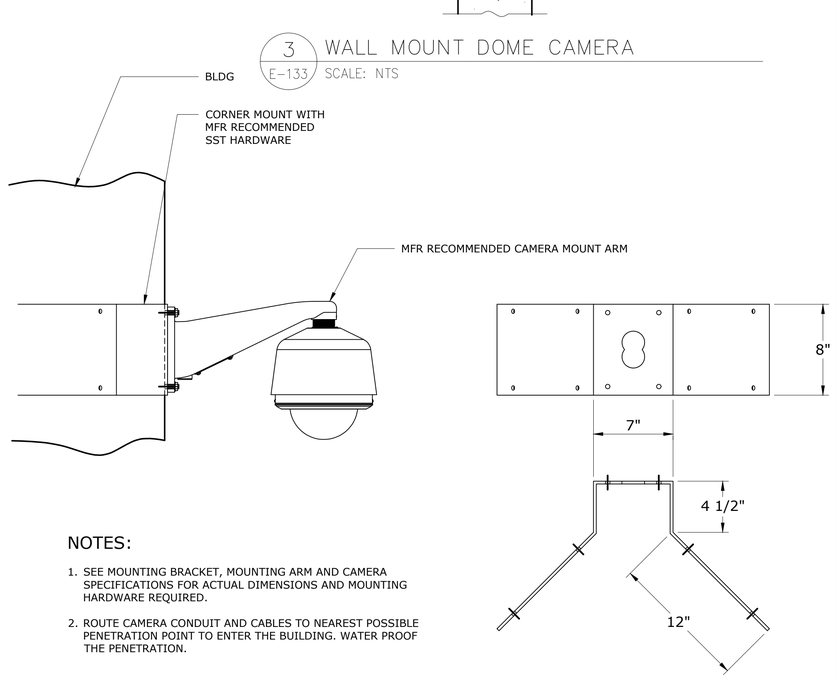

NOTES:

1. SEE MOUNTING BRACKET, MOUNTING ARM AND CAMERA SPECIFICATIONS FOR ACTUAL DIMENSIONS AND MOUNTING HARDWARE REQUIRED.
2. ROUTE CAMERA CONDUIT AND CABLES TO NEAREST POSSIBLE PENETRATION POINT TO ENTER THE BUILDING. WATER PROOF THE PENETRATION.

6 E-133 EXTERIOR CORNER MOUNT DOME CAMERA

SCALE: NTS

WARNING
IT IS A VIOLATION OF SECTION 7209.2 OF THE NEW YORK STATE EDUCATION LAW FOR ANY PERSON, UNLESS ACTING UNDER THE DIRECTION OF A LICENSED PROFESSIONAL ENGINEER, TO ALTER IN ANY WAY PLANS, SPECIFICATIONS, PLATS OR REPORTS TO WHICH THE SEAL OF A PROFESSIONAL ENGINEER HAS BEEN APPLIED. IF AN ITEM BEARING THE SEAL OF A PROFESSIONAL ENGINEER IS ALTERED, THE ALTERING ENGINEER SHALL AFFIX TO THE ITEM HIS SEAL AND THE NOTATION "ALTERED BY" FOLLOWED BY HIS SIGNATURE, THE DATE, AND A SPECIFIC DESCRIPTION OF THE ALTERATION

REV	ISSUED FOR	DATE	BY

PROJECT ENGINEER:	R. FROST
DESIGNED BY:	Y. ABDALLA
DRAWN BY:	Y. ABDALLA
CHECKED BY:	G. MARKOU

IF THIS BAR DOES NOT MEASURE 1" THEN DRAWING IS NOT TO FULL SCALE (0 1/2" 1")

BID SET

STATE OF NEW YORK · GEORGE MARKOU · 022603 · LICENSED PROFESSIONAL ENGINEER

Hazen

HAZEN AND SAWYER
498 SEVENTH AVENUE, 11th FLOOR
NEW YORK, NEW YORK 10018

WESTCHESTER JOINT WATER WORKS
MAMARONECK, NY

RYE LAKE WATER FILTRATION PLANT
HARRISON, NY

ELECTRICAL
STANDARD DETAILS - SHEET 4

DATE:	FEB 2025
HAZEN NO.:	90388-000
CONTRACT NO.:	A1364-A
DRAWING NUMBER:	E-605

File: C:\USERS\APENA\DC\ACCDOCS\HAZEN AND SAWYER\90388-000_RYE_LAKE_FILTRATION\PROJECT FILES\PROJECTWISE\ELECTRICAL\E-605 Saved by APENA Save date: 4/14/2025 10:46 AM
PLOT DATE: 4/15/2025 3:48 PM BY: APENA