ADDENDUM NO. 1

FOR THE

CAESARS LANE
WASTEWATER TREATMENT PLANT EXPANSION
PHASE 2 PROJECT

TOWN OF NEW WINDSOR
ORANGE COUNTY, NEW YORK

PREPARED FOR:
Town of New Windsor
555 Union Avenue
New Windsor, NY 12553

PREPARED BY:
MHE Engineering, D.P.C.
111 Wheatfield Drive, Suite 1
Milford, PA 18337

NOTE: ANY UNAUTHORIZED ALTERATION OR ADDITION TO THIS DOCUMENT IS A VIOLATION OF SECTION 7209(2) OF THE NEW YORK STATE EDUCATION LAW.

DATE: June 6, 2025
JOB #: 18-732

THIS ADDENDUM CONSISTS OF (2) PAGES & (5) ATTACHMENTS

NEW YORK OFFICE
33 Airport Center Drive, Suite 202, New Windsor, NY 12553
845-567-3100 | F: 845-567-3232 | mheny@mhepc.com

PENNSYLVANIA OFFICE
111 Wheatfield Drive, Suite 1, Milford, PA 18337
570-296-2765 | F: 570-296-2767 | mhepa@mhepc.com

Prospective bidders are advised of the following revisions, additions, deletions and/or clarifications to the contract documents:

Revisions:

1. Revisions have been made throughout the Electrical Plans (69 pages). Therefore, the entire Electrical Plan set is being replaced in full. The following is provided to highlight the significant revisions to the Electrical Plan set:
   - Revise select circuit sizes (circuit breakers, conduit, and conductors) throughout New Work Single Line Diagrams to support process design and equipment. Notable changes include:
     - Upsize panel "LVP1" and transformer "TR1".
     - Added transformer "TR8" to feed existing panelboard "PP-1".
   - Altered MCC 4 Demolition Single Line Diagram to illustrate demolition of existing feeder to Disinfection Building.
   - Revised Riser Diagrams to reflect BOD process equipment (instrumentation, circuitry sizes, conductor quantities). Significant changes were made to the following Riser Diagrams:
     - MBR Control Panel.
     - ATAD Control Panel.
     - Existing Disinfection Building SCADA Panel.
   - Updated all schedules to coordinate with the drawing set.
   - Altered General Sheet Notes and Sheet Key notes on floor plans to clarify intended scope of work.
   - Revised layout of electrical rooms and revised instrumentation as needed in MBR Building.
   - Added wall section details displaying underground conduit penetrations into the MBR Building.
   - Changed light fixtures and lighting layout in the Cassette Laydown Area and Membrane Zone in the MBR Building.
2. Plan sheet S-220 “Existing Grit Chamber and Distribution Box Modification Plan and Details” revised plan dimensions of proposed distribution box and added gravel fill and slab over portion of existing distribution box. Revised Plan Sheet S-220 is attached.
3. Plan sheet S-520 “MBR Basin Plans” revised dimension on MBR Basin Foundation Plan. Revised Plan sheet S-520 is attached.
4. Plan sheet S-620 “Chlorination/Dechlorination Tank Blower Platform Plans” revised framing and dimensions of blower platform. Revised Plan Sheet S-620 is attached.
5. Plan sheet S-621 “Chlorination/Dechlorination Tank Blower Platform Sections” revised framing and dimensions of blower platform, added elevation, grade and pavement information. Revised Plan sheet S-621 is attached.

6. Plan sheet S-622 “Chlorination/Dechlorination Tank Blower Platform Details” revised framing details of blower platform, revised dimensions on foundation detail, revised ledger anchorage. Revised Plan sheet S-622 is attached.

Additions:

1. Plan Sheet E-053 “Electrical Schedules” has been added.
2. Plan Sheet E-506 “Electrical Floor Plans-Scum Pump Area, 1st Floor Electrical Room & Membrane Zone” has been added.
3. Plan Sheets AA-100, AA-101, AA-102 “Asbestos Abatement Plans” have been added.
4. Specification Section 028200 “Asbestos Abatement” “has been added.
5. Specification Section 028300 “Lead Safe Work Practices” has been added.

Clarifications/Additional Information

1. Concrete waterproofing admixture (Zypex) is not required in fill concrete**.**

RFI’s:

1. **Question**: In Specification Section FINE SCREEN EQUIPMENT 462100-2 it states “All equipment specified under this Section shall comply Bipartisan Infrastructure Law’s (BIL Public Law 117-58) Build America, Buy America (BABA) requirements for manufactured products. As defined in the Law, this requires “ Does the entire project have a BABA Requirement or Just section 462100-2?

   Response: BABA requirements do not apply to this project. Please disregard this reference to BABA in Specification 462100.

Attachments:

1. Revised Electrical Drawing Set (69 pages including Plan Sheet E-053 “Electrical Schedules” and Plan Sheet E-506 “Electrical Floor Plans-Scum Pump Area, 1st Floor Electrical Room & Membrane Zone”)
2. Plan Sheets AA-100, AA-101, AA-102 “Asbestos Abatement Plans”
3. Specification Section 028200 “Asbestos Abatement”
4. Specification Section 028300 “Lead Safe Work Practices”
5. Revised Structure Plan Sheets S-220, S-520, S-620, S-621, S-622

ALL BIDDERS MUST SUBMIT ACKNOWLEDGEMENT OF RECEIPT OF ALL ADDENDUMS WITH BID

ACKNOWLEDGEMENT OF RECEIPT OF ALL ADDENDUMS LISTED BELOW:

ADDENDUM No. 1: June 6, 2025 _____

<u>SUBMIT THIS SHEET WITH YOUR BID</u>

MHE Engineering, P.C.
111 Wheatfield Drive, Suite 1
Milford, PA 18337

(End of Addendum No. 1)

GENERAL NOTES

SYMBOLS AND ABBREVIATIONS
1. THIS SHEET CONTAINS SYMBOLS AND ABBREVIATIONS TYPICALLY SHOWN ON ELECTRICAL DRAWINGS AND SCHEMATICS. THIS CONTRACT DRAWING SET MAY NOT CONTAIN ALL SYMBOLS AND ABBREVIATIONS SHOWN ON THIS SHEET.

UTILITY
1. ELECTRICAL UTILITY COMPANY WHICH SERVES THE SITE IS CENTRAL HUDSON. COORDINATE ALL WORK WITH THE UTILITY AS REQUIRED.
2. UTILITY CONTACT INFORMATION:
   NAME - COREY CHAMBERS
   EMAIL - CCHAMBERS@CENHUD.COM
   NAME - JESSE LOUBIER
   EMAIL - JLOUBIER@CENHUD.COM

SAFEGUARDS DURING CONSTRUCTION
2. ALL CONSTRUCTION WORK COVERED IN THE UNIFORM CODE, INCLUDING ANY REMOVAL, SHALL COMPLY WITH THE REQUIREMENTS OF CHAPTER 33 OF THE 2020 FCNYS AND CHAPTER 33 OF THE 2020 BCNYS.

PERMITS AND INSPECTIONS
1. OBTAIN ALL REQUIRED PERMITS AND ARRANGE FOR ALL REQUIRED INSPECTIONS IN ACCORDANCE WITH STATE AND LOCAL GOVERNING AUTHORITIES.
2. COMPLETE WORK IN ACCORDANCE WITH THE 2017 NEC, AND STATE AND LOCAL GOVERNING REGULATIONS.
3. PERFORM WORK AS REQUIRED BY CODES, REGULATIONS, LAWS OF LOCAL, STATE AND FEDERAL GOVERNMENTS, AND OTHER AUTHORITIES WITH LAWFUL JURISDICTION. ALL MATERIAL AND EQUIPMENT SHALL BE UL LISTED.

SCOPE
1. UNLESS OTHERWISE INDICATED, PROVIDE A COMPLETE AND OPERATIONAL ELECTRICAL SYSTEM INCLUDING ALL NECESSARY MATERIAL, LABOR, AND EQUIPMENT.
2. ALL DISCONNECTS REQUIRED BY CODE MAY NOT BE SHOWN. CONTRACTOR SHALL PROVIDE ALL NECESSARY DISCONNECTS PER 2017 NEC.
3. ALL EQUIPMENT AND MATERIAL SHALL BE LABELED AND LISTED, AND INSTALLED IN ACCORDANCE WITH THEIR LISTING.
4. PROVIDE ELECTRICAL CONNECTION FOR EVERY FIXTURE, OR ITEM OF EQUIPMENT REQUIRING SAME, WHICH IS SHOWN OR LISTED ON ANY CONTRACT DRAWING
5. CONTRACTOR SHALL PROVIDE NECESSARY SUPPORT FRAMING, STIFFENERS, BRACING, AND HANGERS WHETHER SHOWN OR NOT TO ENSURE A COMPLETE AND DURABLE SYSTEM. SUPPORT FRAMING CONNECTIONS SHALL BE WELDED UNLESS SPECIFICALLY SHOWN OTHERWISE. ACTUAL SUPPORTS MAY VARY FROM THOSE SHOWN IN DETAILS TO ACCOMMODATE EXISTING FIELD CONDITIONS.
6. THE WORK INCLUDED IN THIS CONTRACT ENCOMPASSES THE DRAWINGS AND SPECIFICATIONS. WORK INCLUDED ON THE DRAWINGS ONLY, OR IN THE SPECIFICATIONS ONLY, SHALL BE INCORPORATED AS IF INCLUDED IN BOTH. ALL SYSTEMS SHOWN ARE INTENDED TO BE COMPLETE AND FULLY FUNCTIONING. THE CONTRACTOR SHALL PROVIDE SUCH COMPONENTS AS NECESSARY FOR A FULLY FUNCTIONING SYSTEM.
7. ALL EQUIPMENT SHALL BE INSTALLED IN A NEAT AND WORKMANLIKE MANNER, RECTILINEAR TO BUILDING STRUCTURE.
8. FIELD VERIFY ALL SITE CONDITIONS AND DIMENSIONS PRIOR TO COMMENCEMENT OF ANY WORK OR SHOP FABRICATION. REPORT ANY DISCREPANCIES TO THE OWNER/ENGINEER IN WRITING, PRIOR TO COMMENCEMENT OF ANY WORK.

COORDINATION OF WORK
1. COORDINATE AND VERIFY THAT WORKING AND DEDICATED EQUIPMENT SPACE REQUIREMENTS ARE MET PER NEC.
2. FIELD LOCATE ALL CORE DRILL LOCATIONS.
3. BEFORE CUTTING OR DRILLING INTO BUILDING ELEMENTS INSPECT AND LAYOUT WORK TO AVOID DAMAGING STRUCTURAL ELEMENTS AND BUILDING UTILITIES.
4. BEFORE SELECTING MATERIAL/EQUIPMENT AND PROCEEDING WITH WORK, INSPECT AREAS WHERE MATERIAL AND EQUIPMENT ARE TO BE INSTALLED TO ENSURE SUITABILITY, AND CHECK NEEDED SPACE FOR PLACEMENT, CLEARANCES AND INTERCONNECTIONS.
5. POSSIBLE SYSTEM SHUT-DOWNS AND WORK AREAS CLOSURES MUST BE COORDINATED WELL IN ADVANCE WITH THE OWNER.
6. VERIFY RECEPTACLE, SWITCH, & COVER PLATE COLORS WITH THE OWNER.
7. TURN OVER TO THE OWNER ALL MANUFACTURER'S WARRANTIES FOR EQUIPMENT AND MATERIALS PROVIDED.
8. COORDINATE ANY REQUIRED CONTRACTOR STAGING AREA WITH THE OWNER.

DEFINITIONS
1. THE DEFINITION OF ELECTRICAL TERMS USED SHALL BE AS DEFINED IN THE 2017 EDITION OF THE NATIONAL ELECTRICAL CODE (NEC) AS REFERENCED IN THE BUILDING CODE OF NEW YORK STATE.
2. THE TERM "INDICATED" SHALL MEAN "AS SHOWN ON CONTRACT DOCUMENTS (SPECIFICATIONS, DRAWINGS, AND RELATED ATTACHMENTS)".
3. THE TERM "PROVIDE" SHALL MEAN "TO FURNISH, INSTALL, AND CONNECT COMPLETELY".
4. THE TERM "SIZE" SHALL MEAN ONE OR MORE OF THE FOLLOWING: "LENGTH, CURRENT AND VOLTAGE RATING, NUMBER OF POLES, NEMA SIZE, AND OTHER SIMILAR ELECTRICAL CHARACTERISTICS".

PLANS
1. ELECTRICAL PLANS, DETAILS, AND ONE LINE DIAGRAMS SHOW THE GENERAL LOCATION AND ARRANGEMENT OF THE ELECTRICAL SYSTEM. THEY ARE DIAGRAMMATIC AND DO NOT SHOW ALL CONDUIT BODIES, CONNECTORS, BENDS, FITTINGS, HANGERS, AND ADDITIONAL PULL BOXES WHICH THE CONTRACTOR MUST PROVIDE TO COMPLETE THE ELECTRICAL SYSTEM.
2. ELECTRICAL PLANS AND DETAILS DO NOT SHOW ALL INTERFERENCES AND CONDITIONS, VISIBLE AND/OR HIDDEN, THAT MAY EXIST. CONTRACTOR MUST INSPECT AND SURVEY THE SPACE BEFORE PERFORMING THE WORK.
3. THESE DRAWINGS ARE SCHEMATIC IN NATURE AND REPRESENT A COMPLETED PROJECT. MINOR MODIFICATIONS OF WORK SHALL BE PROVIDED BY THE CONTRACTOR TO COMPLY WITH PROJECT REQUIREMENTS, LOCATIONS OF DEVICES AND EQUIPMENT SHOW A GENERAL ARRANGEMENT AND INTENDED FUNCTION. ALL COMPONENTS SHOWN ON THE RISER DIAGRAMS, BUT NOT ON THE PLAN OR VICE VERSA, SHALL BE INCLUDED AS IF SHOWN ON BOTH. EXACT LOCATION OF MECHANICAL EQUIPMENT THAT REQUIRE ELECTRICAL CONNECTIONS ARE SHOWN ON THE MECHANICAL DRAWINGS. BEFORE INSTALLATION OF WORK, CHECK FOR SWINGS AND ALL REQUIRED CLEARANCES, TO AVOID INTERFERENCE WITH OTHER TRADES. COORDINATE WITH ALL CONTRACT DOCUMENTS, SHOP DRAWINGS AND EQUIPMENT DRAWINGS. THE CONTRACTOR IS RESPONSIBLE FOR OBTAINING ALL REQUIRED CONTRACT DRAWINGS.

METHODS
1. CORE DRILL ALL THRU WALL & THRU FLOOR PENETRATIONS. ALL THRU FLOOR CONDUIT PENETRATIONS TO BE PROPERLY SEALED TO ELIMINATE POTENTIAL FOR WATER TO ENTER CONDUIT SYSTEM OR PASS THRU FLOOR PENETRATION.
2. ALL EXTERIOR CONDUITS TO HAVE DUCT SEAL INSTALLED AT ALL ENDS, BOXES, WEATHERHEADS, PENETRATIONS TO INTERIOR SPACES, ETC.
3. DUCT BANKS SHALL NOT BE ROUTED DIRECTLY ABOVE OR BELOW EXISTING/NEW UTILITIES EXCEPT WHEN CROSSING. WHERE CROSSING EXISTING OR NEW UTILITY DUCT BANKS SHALL CROSS AT 90 DEGREE ANGLES.
4. ALL CONDUIT SYSTEMS EXPOSED TO TEMPERATURE DIFFERENTIALS, IN POTENTIAL CONDENSING ATMOSPHERES, EXTERIOR INSTALLED, OR INSTALLED UNDERGROUND SHALL HAVE PROVISIONS FOR DRAINING WATER OUT OF CONDUIT SYSTEMS.
5. WHERE WIRE SIZE IS NOT NOTED ON DRAWINGS, CONTRACTOR SHALL SIZE ACCORDING TO THE NEC AND SHALL ADHERE TO THE FOLLOWING CRITERIA:
   - EQUIPMENT CIRCUITS AND FEEDERS LESS THAN OR EQUAL TO 100A SHALL BE SIZED USING THE 60°C COPPER AMPACITY COLUMN (NEC T310.16).
   - EQUIPMENT CIRCUITS AND FEEDERS GREATER THAN 100A SHALL BE SIZED USING THE 75°C COPPER AMPACITY COLUMN (NEC T310.16). MINIMUM WIRE SIZE SHALL BE #12 THHN/THWN.
   - ALUMINUM SHALL NOT BE USED. CONDUCTORS SHALL BE STRANDED.
6. FASTENERS ON THE UNDERSIDE OF PRECAST/PRESTRESSED CONCRETE MEMBERS (PLANKS OR DOUBLE TEES) WHICH SERVE FOR DIRECT ATTACHMENT FOR HANGERS OF CONDUIT, ELECTRICAL EQUIPMENT, ETC., MAY NOT BE DRILLED-IN OR SHOT-IN IN THE VICINITY OF THE PRESTRESSING TENDONS. THIS MEANS THAT THE FASTENERS AT THE CONCRETE PLANKS CAN BE PLACED ONLY AT THE JOINT BETWEEN UNITS (UNITS ARE APPROXIMATELY 40" WIDE). ANY INTERMEDIATE SUPPORTS NEEDED TO ACCOMPLISH THIS SHALL BE PROVIDED BY THE CONTRACTOR. AT DOUBLE TEES, ATTACHMENT TO THE FLANGES IS ALLOWED. HOWEVER, BECAUSE OF THEIR THIN CROSS SECTIONS, HEAVY LOADS MUST BE CARRIED BY THROUGH-BOLTS WHICH MUST BE INSTALLED BEFORE THE ROOFING IS APPLIED.

UNDERGROUND UTILITIES
1. UNDERGROUND UTILITY LOCATIONS ARE NOT GUARANTEED, NOR IS THERE ANY GUARANTEE THAT ALL EXISTING UTILITIES WHETHER FUNCTIONAL OR ABANDONED WITHIN THE PROJECT AREA ARE SHOWN ON THESE DRAWINGS.
2. THE CONTRACTOR SHALL DETERMINE THE EXACT LOCATION OF ALL UNDERGROUND UTILITIES BEFORE BEGINNING WORK & SHALL BE RESPONSIBLE FOR ALL DAMAGE RESULTING FROM HIS/HER WORK.
3. THE CONTRACTOR SHALL NOTIFY "UDIG NY" AT WWEBSITE - UDIGNY.ORG OR PHONE - 811 PRIOR TO ANY EXCAVATION.
4. NO ATTEMPT WAS MADE TO LOCATE SUBSURFACE STRUCTURES, ABOVEGROUND STRUCTURES AND/OR UTILITIES BELIEVED TO EXIST IN THE WORKING AREA. IT SHALL BE THE CONTRACTOR'S RESPONSIBILITY TO LOCATE EXISTING UTILITIES NEEDED TO COMPLETE THE WORK AND IT SHALL BE HIS RESPONSIBILITY TO PROCEED WITH GREAT CARE IN EXECUTING ANY WORK. CONTRACTOR SHALL COMPLY WITH THE STATE OF NEW YORK DEPARTMENT OF PUBLIC SERVICE, 16NYCRR PART 753.
5. THE OWNER/ENGINEER SHALL BE NOTIFIED IN WRITING OF ANY CONDITIONS THAT VARY FROM THOSE SHOWN ON THE PLANS. THE CONTRACTOR'S WORK SHALL NOT VARY FROM THE PLANS WITHOUT THE EXPRESSED APPROVAL OF THE OWNER/ENGINEER.
6. CONTRACTOR SHALL PROTECT ALL EXISTING STORM WATER DRAINAGE FACILITIES, INCLUDING PIPES, DRAINAGE STRUCTURES, SWALES, DITCHES, ETC. CONTRACTOR SHALL REPLACE AND RESTORE ANY AND ALL OF THESE FACILITIES, AFFECTED BY CONSTRUCTION ACTIVITIES, AT NO ADDITIONAL COST TO THE OWNER/ENGINEER.
7. CONTRACTOR SHALL BE RESPONSIBLE FOR PROTECTING EXISTING UTILITIES DURING OPERATIONS.
8. THE CONTRACTOR SHALL BE RESPONSIBLE FOR RESTORING ANY SURVEY OR RIGHT-OF-WAY MONUMENTS DISTURBED DURING CONSTRUCTION. THE CONTRACTOR SHALL EMPLOY A LICENSED LAND SURVEYOR TO RESTORE ALL DISTURBED MONUMENTS TO THEIR ORIGINAL LOCATION.
9. RESTORE ALL SURFACES TO AS GOOD OR BETTER CONDITION THAN BEFORE CONSTRUCTION AS SOON AS POSSIBLE FOLLOWING COMPLETION OF WORK IN ANY AREA.
10. THE CONTRACTOR SHALL BECOME FAMILIAR WITH SITE CONDITIONS AND SHALL INCLUDE PROVISIONS TO AVOID CONFLICTS WITH AND/OR RESTORE SITE FEATURES IN THE BID.
11. ALL SUITABLE EXCAVATED MATERIAL SHALL BE REUSED ON SITE AND BE SUITABLY STABILIZED SO THAT IT CANNOT REASONABLY RE-ENTER ANY BODY OF WATER.
12. ALL EXCAVATION SHALL BE CONDUCTED IN ACCORDANCE WITH OSHA STANDARDS, LOCAL REGULATIONS, STATE REGULATIONS, AND FEDERAL REGULATIONS.

SEQUENCE OF CONSTRUCTION

PHASE 2A:
1. PRIMARY ELECTRIC DUCT BANK (DB-01), PRIMARY METERING POLE, PAD-MOUNTED TRANSFORMER, GENERATORS.
2. MBR BUILDING ELECTRICAL FEEDS AND SERVICE ENTRANCE EQUIPMENT.
3. REMAINING MBR ELECTRICAL.

PHASE 2B:
1. HEADWORKS BUILDING ELECTRICAL FEEDS, SERVICE, AND EQUIPMENT.
2. BELT PRESSES AND ASSOCIATED ELECTRICAL EQUIPMENT.
3. POST AERATION TANK ELECTRICAL FEEDS AND EQUIPMENT.
4. PARSHALL FLUME STRUCTURE ELECTRICAL FEEDS AND EQUIPMENT.

PHASE 2C:
1. PRIMARY SETTLING TANK #4 AND PROPOSED PRIMARY SLUDGE VALVE PIT ELECTRICAL FEED AND EQUIPMENT.
2. EXISTING GRIT SYSTEM ELECTRICAL IMPROVEMENTS.
3. ATAD BUILDING ELECTRICAL FEEDS, SERVICE, AND EQUIPMENT.
4. DEWATERING BUILDING ELECTRICAL FEEDS, SERVICE, AND REMAINING ELECTRICAL EQUIPMENT.
5. MAINTENANCE GARAGE ELECTRICAL FEEDS, SERVICE, AND EQUIPMENT.

PHASE 2D:
1. EXISTING BARSCREEN SYSTEM ELECTRICAL IMPROVEMENTS.
2. EXISTING PRIMARY SETTLING TANK ELECTRICAL FEEDS AND IMPROVEMENTS.
3. PRIMARY SLUDGE PIT AND PRIMARY SLUDGE VALVE PIT ELECTRICAL FEEDS AND EQUIPMENT.
4. REMAINING ELECTRICAL FEEDS AND EQUIPMENT.

GENERAL NOTATION

DRAWING NOTATION

HEAVY & DOTTED AND/OR HATCHED INDICATES EXISTING EQUIPMENT TO BE REMOVED BY THIS CONTRACT.

SOLID & LIGHT INDICATES EXISTING EQUIPMENT TO REMAIN.

HEAVY & SOLID INDICATES EQUIPMENT TO BE PROVIDED BY THIS CONTRACT.

DB-XX — DESIGNATION FOR UNDERGROUND ELECTRICAL DUCT BANK

TEXT ADJACENT TO EQUIPMENT IS SOMETIMES ADDED FOR EXTRA CLARIFICATION ON REMOVAL/EXISTING TO REMAIN ITEMS. REFER TO LIST BELOW FOR DEFINITIONS.

TBR	EXISTING EQUIPMENT TO BE REMOVED BY THIS CONTRACT.
ETR	EXISTING EQUIPMENT TO REMAIN.
ERE	EXISTING EQUIPMENT TO BE REMOVED AND RELOCATED AS SHOWN BY THIS CONTRACT.
ETN	EXISTING EQUIPMENT TO BE REMOVED AND REPLACED BY THIS CONTRACT.
UGE	UNDERGROUND ELECTRIC (SAND FILL)
RUGE	UNDERGROUND ELECTRIC (REINFORCED CONCRETE)
OHE	OVERHEAD ELECTRIC
HT	HEAT TRACE

CIRCUITING LEGEND

CIRCUITING

LP2A-1,3,5 — HOMERUN TO PANEL "LP2A", CIRCUITS #1,3,5 (VIA 20A-3P C/B). PROVIDE INSULATED GROUND CONDUCTOR IN ACCORDANCE WITH SPECIFICATIONS. NUMBER OF CIRCUITS INDICATED BY QUANTITY OF ARROW HEADS

L2PA-2 — HOMERUN TO PANEL "L2PA" VIA 20A/1P CKT BKR. SEE BELOW PARAGRAPH 'HASH MARKS' FOR CONDUCTOR SIZING:

HASH MARKS INDICATE QUANTITY OF #12 AWG COPPER CONDUCTORS IN CONDUIT. WHEN NO HASH MARKS ARE INDICATED, CONDUIT SHALL CONTAIN (2) #12 WIRES AND #12 GROUND WIRE. ASSUME 1/2" DIAMETER CONDUIT, UNLESS NOTED OTHERWISE NOTED
EXAMPLE SHOWN AT LEFT INDICATES 2 HOT (SHORT LINES), 2 NEUTRAL (LONG LINES), AND 1 GROUND WIRES (LONG LINE WITH TAIL).

NOTE
CONDUCTORS REQUIRED FOR LUMINAIRE SWITCHING ARE NOT ACCOUNTED FOR ON THE PLANS USING HASH MARKS. CONTRACTOR SHALL INCLUDE ANY NECESSARY CONDUCTORS REQUIRED FOR SWITCHING IN BID. SWITCHING DESIGNATIONS (LOWER CASE LETTERS) ARE SHOWN TO ILLUSTRATE SWITCHING INTENT.

CIRCUIT ROUTING SHOWN ON DRAWINGS SHALL BE CONSIDERED DIAGRAMMATIC ONLY. CONTRACTOR SHALL PROVIDE NECESSARY OFFSETS AND ROUTE FEEDERS AFTER HAVING CONSIDERED ALL FIELD OBSTACLES

POWER EQUIPMENT

SINGLE LINE DIAGRAM

- POWER TRANSFORMER
- PT — POTENTIAL TRANSFORMER
- CT — CURRENT TRANSFORMER
- FUSE
- **AF **AT — MOLDED CASE CIRCUIT BREAKER
  "AF" INDICATES AMPERE FRAME SIZE
  "AT" INDICATES AMPERE TRIP SETTINGS
- 400AF 300AT — FUSED DISCONNECT
  "400AF" INDICATES AMPERE SWITCH SIZE
  "300AT" INDICATES AMPERE FUSE SIZE
- 200A — DISCONNECT SWITCH (NON-FUSED)
  "200A" INDICATES AMPERE SWITCH SIZE
- SYSTEM GROUND OR EQUIPMENT GROUND
- PANELBOARD WITH MAIN CIRCUIT BREAKER
- PANELBOARD WITH MAIN LUGS ONLY
- EMERGENCY GENERATOR
- METER
- ATS / MTS
- ACROSS-THE-LINE STARTER (AXL)
- CONTACTOR (NORMALLY OPEN)
- CONTACTOR (NORMALLY CLOSED)
- CONDUIT SEALING FITTING
- CONDUIT UNION
- CONDUIT BUSHING
- CONTROL DEVICE/INSTRUMENT
- VARIABLE FREQUENCY DRIVE (VFD)
- THRU WALL WATERTIGHT PENETRATION
- E — FLEX CONNECTION (E DENOTES EXPLOSION PROOF)
- HGP — PASSIVE HARMONIC FILTER
- KWHD — POWER METER
- KDR — INPUT LINE REACTOR
- DV/DT — OUTPUT FILTER
- PMR — PUMP MONITORING RELAY
- LOR — LOCAL/OFF/REMOTE SWITCH
- HOA — HAND/OFF/AUTO SWITCH
- ETM — ELAPSED TIME METER
- STATUS/PILOT LIGHT
- PUSH BUTTON
- \# — INDICATES COLOR OF LIGHT OR PUSH BUTTON:
  G = GREEN, A = AMBER,
  R = RED, B = BLACK

FLOOR PLAN

- SURFACE MTD BRANCH CIRCUIT PANELBOARD.
- RECESSED MTD BRANCH CIRCUIT PANELBOARD.
- JB — JUNCTION AND/OR PULL BOX
- ELECTRICAL CONNECTION AS DEFINED IN EQUIPMENT CONNECTION SCHEDULE.
- HP — EXISTING ELECTRICAL CONNECTION. ('HP' DENOTES HORSEPOWER.)
- LOCAL PUSH BUTTON/ CONTROL STATION
- UTILITY POLE
- SPD — SURGE SUPPRESSION DEVICE
- CO — CARBON MONOXIDE DETECTOR
- DATA DROP
- PS — DIFFERENTIAL PRESSURE SWITCH
- GAS DETECTION, LEAK DETECTION, OR VENTILATION SYSTEM ALARM HORN/STROBE (MULTIPLE DEVICES)

WIRING DEVICES

RECEPTACLES

1. FACEPLATE COLOR - STAINLESS STEEL, UON.
2. DEVICE COLOR - GRAY, UON.

- 125 VOLT, 2 POLE, 3 WIRE, 20 AMP, HEAVY DUTY DUPLEX RECEPTACLE, MOUNTING HEIGHT 18" AFF (UON).
- 125 VOLT, 2 POLE, 3 WIRE, 20 AMP, HEAVY DUTY DUPLEX RECEPTACLE MOUNTED ABOVE COUNTER (UON).
- 125 VOLT, 2 POLE, 3 WIRE, 20 AMP, HEAVY DUTY DUPLEX RECEPTACLE, STANCHION-MOUNTED. PROVIDE NECESSARY UNISTRUT/MOUNTING HARDWARE @ 24" A.F.G. (UON)

TEXT ADJACENT TO RECEPTACLES INDICATES CONFIGURATION OR ACCESSORIES. REFER TO LIST BELOW FOR DEFINITIONS.

#	INDICATES PANELBOARD CIRCUIT TO WHICH RECEPTACLE SHALL BE CIRCUITED. REFER TO HOMERUN FOR PANELBOARD DESIGNATION.
WP	EXTERIOR RECEPTACLES SUBJECT TO DAMP ENVIRONMENTS SHALL HAVE WEATHER-PROOF-IN-USE BUBBLE COVER WITH PADLOCK CAPABILITY. WEATHER-PROOF RECEPTACLES ARE TO HAVE INTEGRAL GFI PROTECTION (SEE BELOW)
GFI	RECEPTACLE EQUIPPED WITH INTEGRAL GROUND FAULT CIRCUIT INTERRUPTER
XP	EXPLOSION PROOF. RATED FOR CLASS I DIVISION I INSTALLATION.
DED	DEDICATED RECEPTACLE.

SWITCHES

1. FACEPLATE COLOR - STAINLESS STEEL, UON.
2. DEVICE COLOR - GRAY, UON.

- 125V, 20A HEAVY DUTY SWITCH.

TEXT ADJACENT TO SWITCH INDICATES SPECIAL CONFIGURATION OR ACCESSORIES. REFER TO LIST BELOW FOR DEFINITIONS.

a,b	LOWER CASE LETTER INDICATES SWITCH DESIGNATION.
3,4	INDICATES A 3-WAY OR 4-WAY SWITCH.
WP	EXTERIOR SWITCHES SUBJECT TO DAMP ENVIRONMENTS SHALL HAVE WEATHER-PROOF-IN-USE BUBLE COVER WITH PADLOCK CAPABILITY.
M	MOTOR RATED SNAP SWITCH WITH OVERLOADS. CONTRACTOR SHALL SIZE SWITCH AND OVERLOADS BASED ON ACTUAL NAMEPLATE DATA OF EQUIPMENT SUPPLIED/PURCHASED.
XP	EXPLOSION PROOF. RATED FOR CLASS I DIVISION I INSTALLATION.

GENERAL ABBREVIATIONS

A	AMPERES	FMC	FLEXIBLE METAL CONDUIT	MDP	MAIN DISTRIBUTION PANELBOARD	SP	SPARE
AE	PROBE ELEMENT	FRAC	FRACTIONAL	MFG	MANUFACTURER	SPD	SURGE PROTECTIVE DEVICE
AFF	ABOVE FINISH FLOOR	FT	FEET	MFM	MULTI-FUNCTION METER	STP	SHIELDED TWISTED PAIR
AFG	ABOVE FINISH GRADE	FURN	FURNISHED	MIN	MINIMUM		
AHJ	AUTHORITY HAVING JURISDICTION	FVR	FULL VOLTAGE REVERSING STARTER	MLO	MAIN LUGS ONLY	TBR	TO BE REMOVED
AIC	AMPERE INTERRUPTING CAPACITY	FVNR	FULL VOLTAGE NON-REVERSING STARTER	NP	NAME PLATE	TSTAT	THERMOSTAT
AIT	PROBE TRANSMITTER	FWP	FINISHED WATER PUMP	MS	MOTOR STARTER	TT	TEMPERATURE SENSOR
AL	ALUMINUM			MTS	MANUAL TRANSFER SWITCH	TYP	TYPICAL
APPROX	APPROXIMATELY	GC	GENERAL CONTRACTOR	MW	MEGAWATT	TVSS	TRANSIENT VOLTAGE SURGE SUPPRESSION
ATS	AUTOMATIC TRANSFER SWITCH	GF	GROUND FAULT	MWTP	MOTOR WINDING THERMAL PROTECTOR		
AWG	AMERICAN WIRE GAUGE	GFCI,GFI	GROUND-FAULT CIRCUIT INTERRUPTER			UGE	UNDERGROUND ELECTRIC
AXL	ACROSS THE LINE STARTER	GND,G	GROUND OR GROUNDING	NC	NORMALLY CLOSED	UOI	UNLESS OTHERWISE INDICATED
				NEC	NATIONAL ELECTRICAL CODE	UON	UNLESS OTHERWISE NOTED
BCNYS	NEW YORK STATE BUILDING CODE	HH	HANDHOLE	NEMA	NAT'L ELECTRICAL MANUFACTURER'S ASSOC.	UPS	UNINTERRUPTIBLE POWER SUPPLY
BLDG	BUILDING	HMI	HUMAN MACHINE INTERFACE	NESC	NATIONAL ELECTRICAL SAFETY CODE		
BOD	BASIS OF DESIGN	HOA	HAND, OFF, AUTOMATIC SWITCH	NF	NON FUSED	V	VOLT
		HP	HORSEPOWER	NIC	NOT IN CONTRACT	VFD	VARIABLE FREQUENCY DRIVE
C	CONDUIT	HT	HEAT TRACE	NP	NAME PLATE	VFI	VACUUM FAULT INTERRUPTER
CB	CIRCUIT BREAKER	HVAC	HEATING, VENTILATING, & AIR CONDITIONING	NTS	NOT TO SCALE		
CKT	CIRCUIT					W	WIRE
CL	CENTERLINE			OC	ON CENTER	WC	WASHER COMPACTOR
CLF	CURRENT LIMITING FUSE	IBC	INTERNATIONAL BUILDING CODE	OCB	OIL CIRCUIT BREAKER	WP	WEATHER PROOF RATED DEVICE
CONT	CONTRACT	IFC	INTERNATIONAL FIRE CODE	OEM	ORIGINAL EQUIPMENT MANUFACTURER	WTP	WATER TREATMENT PLANT
CP	CONTROL PANEL	INST	INSTALLED	OHE	OVERHEAD ELECTRIC	WWTP	WASTE WATER TREATMENT PLANT
CPT	CONTROL POWER TRANSFORMER			OIU	OPERATOR INTERFACE UNIT		
CT	CURRENT TRANSFORMER	JB	JUNCTION BOX	OL	OVERLOADS	XFMR	TRANSFORMER
CU	COPPER						
		KCMIL	THOUSAND CIRCULAR MILS	P	POLE	ZS	SWING VALVE POSITION SWITCH
DB	DUCT BANK	KVA	KILOVOLT AMPERES	PH	PHASE		
DISC	DISCONNECT	KW	KILOWATTS	PIT	PRESSURE ISENSOR	Δ	DELTA
DP	DIFFERENTIAL PRESSURE SWITCH			PLC	PROGRAMMABLE LOGIC CONTROLLER	Y	WYE
DWG	DRAWING	LA	LIGHTNING ARRESTORS	PS	PUMP STATION	ϕ	PHASE
		LC	UNLOADING STATION	PSH	HIGH PRESSURE SWITCH		
EC	ELECTRICAL CONTRACTOR	LCS	LOCAL CONTROL STATION	PSL	LOW PRESSURE SWITCH		
ECS	EQUIPMENT CONNECTION SCHEDULE	LE	LEVEL SENSOR ELEMENT	PSLL	LOW LOW PRESSURE SWITCH		
EGS	EMERGENCY GENERATOR SYSTEM	LFMC	LIQUID TIGHT FLEXIBLE METAL CONDUIT	PVC	POLYVINYL CHLORIDE		
EM	EMERGENCY	LIT	LEVEL SENSOR TRANSDUCER				
EMT	ELECTRICAL METALLIC TUBING	LPS	LIGHTNING PROTECTION SYSTEM	QTY	QUANTITY		
ERE	EXISTING EQUIPMENT TO BE REMOVED AND RELOCATED	LSH	HIGH LEVEL FLOAT SWITCH				
		LSHH	HIGH HIGH LEVEL FLOAT SWITCH	REQ'D	REQUIRED		
EPR	ELECTRONIC PROTECTION RELAY	LSL	LOW LEVEL FLOAT SWITCH	RGS	RIGID GALVANIZED STEEL		
ETR	EXISTING TO REMAIN	LSLL	LOW LOW LEVEL FLOAT SWITCH	RMC	RIGID METAL CONDUIT		
		LTG	LIGHTING	RUGE	REINFORCED UNDERGROUND ELECTRIC		
FCNYS	NEW YORK STATE FIRE CODE	LVT	LINE VOLTAGE THERMOSTAT	RWP	RAW WATER PUMP		
FC	FOOT CANDLE						
FE	FLOW METER ELEMENT	MCC	MOTOR CONTROL CENTER	SC	SCREEN		
FIT	FLOW METER TRANSMITTER	MCB	MAIN CIRCUIT BREAKER	SE	SERVICE ENTRANCE RATED		
FLA	FULL LOAD AMPERES	MCP	MOTOR CIRCUIT PROTECTOR	SLD	SINGLE LINE DIAGRAM		

LIGHTING

LIGHT FIXTURES

'A' UPPER CASE LETTER INDICATES FIXTURE TYPE. (REFER TO LUMINAIRE SCHEDULE)

'a' LOWER CASE LETTER INDICATES SWITCH CONTROL. WHERE NO SWITCH CONTROL DESIGNATION IS PROVIDED, CONTROL SHALL BE VIA MASTER ROOM SWITCH OR MASTER ROOM OCCUPANCY SENSOR (WHERE PROVIDED).

'#' INDICATES PANELBOARD CIRCUIT TO WHICH FIXTURE SHALL BE CIRCUITED.

WHEN A LIGHT FIXTURE IS HALF SHADED THAT IS INDICATION THE FIXTURE CONTAINS AN EMERGENCY BATTERY BACKUP OPTION. REFER TO LUMINAIRE SCHEDULE.

EXIT & EGRESS

- EBU — EMERGENCY BATTERY UNIT (EBU). REFER TO LUMINAIRE SCHEDULE
- CEILING-MOUNTED ILLUMINATED "EXIT" SIGN LIGHTING FIXTURE.
- WALL-MOUNTED ILLUMINATED "EXIT" SIGN LIGHTING FIXTURE.

NOTE: ARROWS INDICATE DIRECTION OF EGRESS. XP DENOTES EXPLOSION PROOF LED EMERGENCY LIGHT & EXIT SIGN COMBINATION

EXIT SIGNS SHALL BE INSTALLED 8'-6" AFF. PROVIDE PENDANTS AS REQUIRED BY ROOM CEILING/STRUCTURE HEIGHT.

BLDG./STRUCTURE ABBREVIATIONS

ATAD	AUTOTHERMAL THERMOPHILIC AEROBIC DIGESTION
BLDG	BUILDING
MBR	MEMBRANE BIO REACTOR
RAS	RETURNED ACTIVATED SLUDGE
SNDR	STORAGE NITRIFICATION DENITRIFICATION REACTOR
WAS	WASTE ACTIVATED SLUDGE

BUILDING CODE NOTE

TO THE BEST OF THE REGISTERED DESIGN PROFESSIONAL'S KNOWLEDGE, BELIEF AND PROFESSIONAL JUDGEMENT, THESE PLANS AND/OR SPECIFICATIONS ARE IN COMPLIANCE WITH THE 2020 UNIFORM CODE.

ENERGY CODE NOTE

TO THE BEST OF THE REGISTERED DESIGN PROFESSIONAL'S KNOWLEDGE, BELIEF AND PROFESSIONAL JUDGEMENT, THESE PLANS AND/OR SPECIFICATIONS ARE IN COMPLIANCE WITH THE 2020 ENERGY CODE.

MHE ENGINEERING
33 Airport Center Drive, Suite 202
New Windsor, NY 12553
(845) 567-3100
111 Wheatfield Drive, Suite 1
Milford, PA 18337
(570) 296-2765

BID ADDENDUM

JADE STONE ENGINEERING

STATE OF NEW YORK · JEFFREY E ROBINSON · 095896 · LICENSED PROFESSIONAL ENGINEER

HAZARDOUS MATERIAL NOTE:
THE SERVICES PROVIDED BY MHE, INCLUDING ALL WORK DEPICTED ON MHE PLANS, DO NOT INCLUDE SERVICES RELATED TO THE IDENTIFICATION, CONTROLS OR HANDLING OF HAZARDOUS MATERIALS, INCLUDING SUCH MATERIALS AS ASBESTOS AND LEAD PAINT. ALL TESTING, IDENTIFICATION, ABATEMENT, CONTROLS, AND HANDLING OF HAZARDOUS MATERIALS SHALL BE UNDERTAKEN BY A HAZARDOUS MATERIAL CONSULTANT AND CERTIFIED PROFESSIONALS. IF SUCH MATERIALS HAVE BEEN IDENTIFIED, CONTRACTOR WILL COMMUNICATE DIRECTLY WITH HAZARDOUS MATERIAL PROFESSIONAL FOR THE PERFORMANCE OF ANY WORK ON OR ADJACENT TO SAID MATERIALS. IF UNIDENTIFIED MATERIALS OF CONCERN ARE ENCOUNTERED WHILE UNDERTAKING THE WORK SHOWN HEREON, CONTRACTOR SHALL IMMEDIATELY NOTIFY ENGINEER AND OWNER, AND SHALL OBTAIN DIRECTION FROM THE HAZARDOUS MATERIAL CONSULTANT PRIOR TO THE CONTINUATION OF WORK INVOLVING SUSPECTED MATERIAL.

UDIG·NY
SAFE DIGGING STARTS HERE
CALL 811

UNAUTHORIZED ADDITION OR ALTERATION OF THIS PLAN IS A VIOLATION OF SECTION 7209(2) OF THE NEW YORK STATE EDUCATION LAW.

ALL PRODUCTION & INTELLECTUAL PROPERTY RIGHT RESERVED ©

CAESARS LANE WWTP EXPANSION PROJECT: PHASE 2
145 CAESARS LN.
NEW WINDSOR, NY 12553

FOR TOWN OF NEW WINDSOR
555 UNION AVE.
NEW WINDSOR, NY 12553

ELECTRICAL LEGENDS, ABBREVIATIONS, & NOTES

REVISIONS

NO.	DESCRIPTION	DATE

ISSUED DATE:	06 JUNE, 2025
DESIGN BY:	RRM
DRAWN BY:	CDJ
CHECKED BY:	MGR
REVIEWED BY:	JER

SHEET NO.
E-001

PROJECT # 18-732 PHASE #

NFPA 820 (2020 EDITION) CODE REVIEW, TEN STATE STANDARDS, & AREA CLASSIFICATION

ELECTRICAL SHEETS	AREA	NFPA 820 REFERENCE	FUNCTION	FIRE AND EXPLOSION HAZARD	VENTILATION REQUIRED PER TEN STATE STANDARDS	CLASSIFICATION	REMARKS
E-200 SERIES	SCREENING AREA	TABLE 5.2.2 LIQUID STREAM TREATMENT PROCESSES ROW 2, LINE B	COARSE AND FINE SCREEN FACILITIES - REMOVAL OF SCREENINGS FROM RAW WASTEWATER.	POSSIBLE IGNITION OF FLAMMABLE GASES AND FLOATING FLAMMABLE LIQUIDS	CONTINUOUSLY VENTILATED AT 12 AIR CHANGES PER HOUR	CLASS I, DIVISION II, GROUP D IN ENTIRE CLOSED SPACE	COMBUSTIBLE GAS DETECTION SYSTEM REQUIRED
	GRIT CHAMBER	TABLE 5.2.2 LIQUID STREAM TREATMENT PROCESSES ROW 5, LINE C	GRIT REMOVAL TANKS - SEPARATION OF GRIT FROM RAW WASTEWATER	POSSIBLE IGNITION OF FLAMMABLE GASES AND FLOATING FLAMMABLE LIQUIDS	NOT ENCLOSED, OPEN TO ATMOSPHERE	CLASS I, DIVISION II, GROUP D WITHIN 10' ENVELOPE AROUND EQUIPMENT AND OPEN CHANNEL	
	INFLUENT STRUCTURE	TABLE 5.2.2 LIQUID STREAM TREATMENT PROCESSES ROW 1, LINE C	DIVERSION AND CONTROL STRUCTURES - NOT PRECEDED BY PRIMARY TREATMENT WITH SKIMMING	POSSIBLE IGNITION OF FLAMMABLE GASES AND FLOATING FLAMMABLE LIQUIDS	NOT ENCLOSED, OPEN TO ATMOSPHERE	CLASS I, DIVISION II, GROUP D WITHIN 10' ENVELOPE AROUND EQUIPMENT AND OPEN CHANNEL	
	ELECTRICAL AREAS	UNCLASSIFIED					
E-300 SERIES	PRIMARY SETTLING TANKS	TABLE 5.2.2 LIQUID STREAM TREATMENT PROCESSES ROW 7, LINE C	PRIMARY SEDIMENTATION TANKS - SEPARATION OF FLOATING OR SETTLEABLE SOLIDS FROM RAW WASTEWATER	POSSIBLE IGNITION OF FLAMMABLE GASES AND FLOATING FLAMMABLE LIQUIDS	NOT ENCLOSED, OPEN TO ATMOSPHERE	CLASS I, DIVISION II, GROUP D INTERIOR OF THE TANK FROM THE MIN. OPERATING WATER SURFACE TO THE TOP OF THE WALL; ENVELOPE 18" ABOVE THE TOP OF THE TANK AND EXTENDING 18" BEYOND THE EXTERIOR WALL; ENVELOPE 18" ABOVE GRADE EXTENDING 10' HORIZONTALLY FROM THE EXTERIOR WALLS	
	SCUM PIT	TABLE 6.2.2(A) SOLIDS TREATMENT PROCESSES ROW 5, LINE C	SCUM PUMPING AREAS - PUMPING OF SCUM, WET SIDE OF PUMPING STATION	BUILDUP OF VAPORS FROM FLAMMABLE OR COMBUSTIBLE LIQUIDS	NOT ENCLOSED, OPEN TO ATMOSPHERE	CLASS I, DIVISION II, GROUP D WITHIN 10' ENVELOPE AROUND EQUIPMENT AND OPEN CHANNEL	
	SLUDGE WET WELL	TABLE 6.2.2(A) SOLIDS TREATMENT PROCESSES ROW 10, LINE A	SLUDGE STORAGE WET WELLS, PITS, AND HOLDING TANKS - RETAINING OF SLUDGE	POSSIBLE GENERATION OF METHANE GAS IN EXPLOSIVE CONCENTRATIONS; CARRYOVER OF FLOATING FLAMMABLE LIQUIDS	NOT ENCLOSED, OPEN TO ATMOSPHERE	CLASS I, DIVISION I, GROUP D WITHIN ENVELOPE 18" ABOVE WATER SURFACE AND 10' HORIZONTALLY FROM WETTED WALLS	
	PRIMARY SLUDGE PIT	TABLE 6.2.2(A) SOLIDS TREATMENT PROCESSES ROW 9, LINE B	SLUDGE PUMPING STATION DRY WELLS - DRY SIDE OF A SLUDGE PUMPING STATION	BUILDUP OF METHANE GAS OR FLAMMABLE VAPORS	CONTINUOUSLY VENTILATED AT 6 AIR CHANGES PER HOUR	UNCLASSIFEID	
	PRIMARY SLUDGE VALVE VAULT & PROPOSED SLUDGE VALVE PIT	TABLE 4.2.2 COLLECTION SYSTEMS ROW 29, LINE A	BELOWGRADE VALVE VAULT - PHYSICALLY SEPARATED FROM THE WET WELL AND WITH CLOSED PIPING SYSTEM	BUILDUP OF VAPORS FROM FLAMMABLE OR COMBUSTIBLE LIQUIDS	NOT NORMALLY VENTILATED	CLASS I, DIVISION II, GROUP D IN ENTIRE CLOSED SPACE	
	PRIMARY SLUDGE VALVE VAULT	TABLE 4.2.2 COLLECTION SYSTEMS ROW 29, LINE B	BELOWGRADE VALVE VAULT - PHYSICALLY SEPARATED FROM THE WET WELL AND WITH CLOSED PIPING SYSTEM	BUILDUP OF VAPORS FROM FLAMMABLE OR COMBUSTIBLE LIQUIDS	CONTINUOUSLY VENTILATED AT 6 AIR CHANGES PER HOUR	UNCLASSIFEID	
E-400 SERIES	THERMA, SNDR, BIOFILTER	TABLE 5.2.2 LIQUID STREAM TREATMENT PROCESSES ROW 18	NITRIFICATION AND DENITRIFICATION TANKS - TERTIARY TREATMENT OF WASTEWATER TO REDUCE OR REMOVE NITROGEN	N/A	N/A	UNCLASSIFIED	PRECEDED BY PRIMARY SEDIMENTATION
	THICKENING ROOM	TABLE 6.2.2 SOLID TREATMENT PROCESSES ROW 8, LINE C	SLUDGE THICKENER - SLUDGE CONCENTRATION AND REMOVAL, GRAVITY, OR DISSOLVED AIR FLOTATION	POSSIBLE GENERATION OF METHANE FROM SLUDGE; CARRYOVER OF FLOATING FLAMMABLE LIQUIDS	CONTINUOUSLY VENTILATED AT 6 AIR CHANGES PER HOUR	UNCLASSIFIED	PRECEDED BY PRIMARY TREATMENT WITH SKIMMING; VENTILATION REQUIREMENT SATISFIED; HVAC MONITORING REQUIRED
	SLUDGE HOLDING TANK	TABLE 6.2.2(A) SOLIDS TREATMENT PROCESSES ROW 10, LINE A	SLUDGE STORAGE WET WELLS, PITS, AND HOLDING TANKS - RETAINING OF SLUDGE	POSSIBLE GENERATION OF METHANE FROM SLUDGE; CARRYOVER OF FLOATING FLAMMABLE LIQUIDS	NOT ENCLOSED, OPEN TO ATMOSPHERE	CLASS I, DIVISION I, GROUP D WITHIN ENVELOPE 18" ABOVE WATER SURFACE AND 10' HORIZONTALLY FROM WETTED WALLS	
	ALL OTHER AREAS	UNCLASSIFIED					
E-500 SERIES	MCROSCREEN BLDG / INFLUENT DRY WELL / WET WELL	TABLE 5.2.2 LIQUID STREAM TREATMENT PROCESSES ROW 21	INTERMEDIATE OR FINAL PUMPING STATIONS AND OTHER UNIT PROCESSES AND STRUCTURES NOT SPECIFICALLY ADDRESSED IN THIS TABLE - PRECEDED BY PRIMARY TREATMENT WITH SKIMMING	N/A	NO REQUIREMENT	UNCLASSIFIED	
	ANEROBIC / ANOXIC ZONES	TABLE 5.2.2 LIQUID STREAM TREATMENT PROCESSES ROW 11	ENCLOSED AERATION BASIN, AEROBIC OR SUSPENDED GROWTH SYSTEMS, MEMBRANE BIOLOGICAL REACTORS - AEROBIC TREATMENT OF WASTEWATER PRECEDED BY PRIMARY TREATMENT WITH SKIMMING	N/A	NO REQUIREMENT	UNCLASSIFEID	PRECEDED BY PRIMARY TREATMENT WITH SKIMMING
	RAS PUMP ROOM / MEMBRANE ZONE / CASSETTE LAYDOWN AREA / SCUM PUMPING AREA	TABLE 6.2.2(A) SOLIDS TREATMENT PROCESSES ROW 9, LINE B	SLUDGE PUMPING STATION DRY WELLS - DRY SIDE OF A SLUDGE PUMPING STATION	BUILDUP OF METHANE GAS OR FLAMMABLE VAPORS	CONTINUOUSLY VENTILATED AT 6 AIR CHANGES PER HOUR	UNCLASSIFEID	VENTILATION REQUIREMENT SATISFIED; HVAC MONITORING REQUIRED
	SCUM PIT	TABLE 6.2.2(A) SOLIDS TREATMENT PROCESSES ROW 5, LINE C	SCUM PUMPING AREAS - PUMPING OF SCUM, WET SIDE OF PUMPING STATION	BUILDUP OF VAPORS FROM FLAMMABLE OR COMBUSTIBLE LIQUIDS	NOT ENCLOSED, OPEN TO ATMOSPHERE	CLASS I, DIVISION I, GROUP D WITHIN 10' ENVELOPE AROUND EQUIPMENT AND OPEN CHANNEL	
	ALL OTHER AREAS	UNCLASSIFIED					
E-600 SERIES	CHEMICAL FEED ROOM / DISINFECTION TANK	TABLE 5.2.2 LIQUID STREAM TREATMENT PROCESSES ROW 21	INTERMEDIATE OR FINAL PUMPING STATIONS AND OTHER UNIT PROCESSES AND STRUCTURES NOT SPECIFICALLY ADDRESSED IN THIS TABLE - PRECEDED BY PRIMARY TREATMENT WITH SKIMMING	N/A	NO REQUIREMENT	UNCLASSIFEID	THESE UNIT PROCESSES USE CORROSIVE CHEMICALS THAT REQUIRE THE USE OF SPECIFIC MATERIALS OF CONSTRUCTION.
	BACKPULSE PUMP STATION	TABLE 4.2.2 COLLECTION SYSTEM ROW 16	ABOVEGRADE WASTEWATER PUMPING STATION - PUMP ROOM PHYSICALLY SEPARATED WITH NO PERSONNEL ACCESS TO WET WELL; PUMPING OF WASTEWATER FROM A SANITARY OR COMBINED SEWER SYSTEM THROUGH CLOSED PUMPS AND PIPES	N/A	NO REQUIREMENT	UNCLASSIFIED	
	ALL OTHER AREAS	UNCLASSIFIED					
E-700 SERIES	BELT PRESS ROOM / LOWER LEVEL OF DEWATERING BUILDING	TABLE 6.2.2(A) SOLIDS TREATMENT PROCESSES ROW 12	DEWATERING BUILDINGS CONTAINING CENTRIFUGES, GRAVITY BELT THICKENERS, BELT AND VACUUM FILTERS, AND FILTER PRESSES - REMOVAL OF WATER FROM SLUDGE AND THE CONVEYANCE OF SLUDGE CAKE	ACCUMULATION OF METHANE GAS	CONTINUOUSLY VENTILATED AT 6 AIR CHANGES PER HOUR	UNCLASSIFIED	VENTILATION REQUIREMENT SATISFIED; HVAC MONITORING REQUIRED
	ALL OTHER AREAS	UNCLASSIFIED					
E-900 SERIES	GARAGE	UNCLASSIFIED					

MHE ENGINEERING
33 Airport Center Drive, Suite 202
New Windsor, NY 12553
(845) 567-3100
111 Wheatfield Drive, Suite 1
Milford, PA 18337
(570) 296-2765

BID ADDENDUM

JADE STONE ENGINEERING

STATE OF NEW YORK · JEFFREY E. ROBINSON · 095896 · LICENSED PROFESSIONAL ENGINEER

HAZARDOUS MATERIAL NOTE:
THE SERVICES PROVIDED BY MHE, INCLUDING ALL WORK DEPICTED ON MHE PLANS, DO NOT INCLUDE SERVICES RELATED TO THE IDENTIFICATION, CONTROLS OR HANDLING OF HAZARDOUS MATERIALS, INCLUDING SUCH MATERIALS AS ASBESTOS AND LEAD PAINT. ALL TESTING, IDENTIFICATION, ABATEMENT, CONTROLS, AND HANDLING OF HAZARDOUS MATERIALS SHALL BE UNDERTAKEN BY A HAZARDOUS MATERIAL CONSULTANT AND CERTIFIED PROFESSIONALS. IF SUCH MATERIALS HAVE BEEN IDENTIFIED, CONTRACTOR WILL COMMUNICATE DIRECTLY WITH HAZARDOUS MATERIAL PROFESSIONAL FOR THE PERFORMANCE OF ANY WORK ON OR ADJACENT TO SAID MATERIALS. IF UNIDENTIFIED MATERIALS OF CONCERN ARE ENCOUNTERED WHILE UNDERTAKING THE WORK SHOWN HEREON, CONTRACTOR SHALL IMMEDIATELY NOTIFY ENGINEER AND OWNER, AND SHALL OBTAIN DIRECTION FROM THE HAZARDOUS MATERIAL CONSULTANT PRIOR TO THE CONTINUATION OF WORK INVOLVING SUSPECTED MATERIAL.

UDIG·NY SAFE DIGGING STARTS HERE
CALL 811

UNAUTHORIZED ADDITION OR ALTERATION OF THIS PLAN IS A VIOLATION OF SECTION 7209(2) OF THE NEW YORK STATE EDUCATION LAW.

ALL PRODUCTION & INTELLECTUAL PROPERTY RIGHT RESERVED ©

CAESARS LANE WWTP EXPANSION PROJECT: PHASE 2
145 CAESARS LN.
NEW WINDSOR, NY 12553
FOR TOWN OF NEW WINDSOR
555 UNION AVE.
NEW WINDSOR, NY 12553

ELECTRICAL NFPA AREA CLASSIFICATIONS

REVISIONS

NO.	DESCRIPTION	DATE

ISSUED DATE:	06 JUNE, 2025
DESIGN BY:	RRM
DRAWN BY:	CDJ
CHECKED BY:	MGR
REVIEWED BY:	JER

SHEET NO.
E-002

PROJECT # 18-732 PHASE #

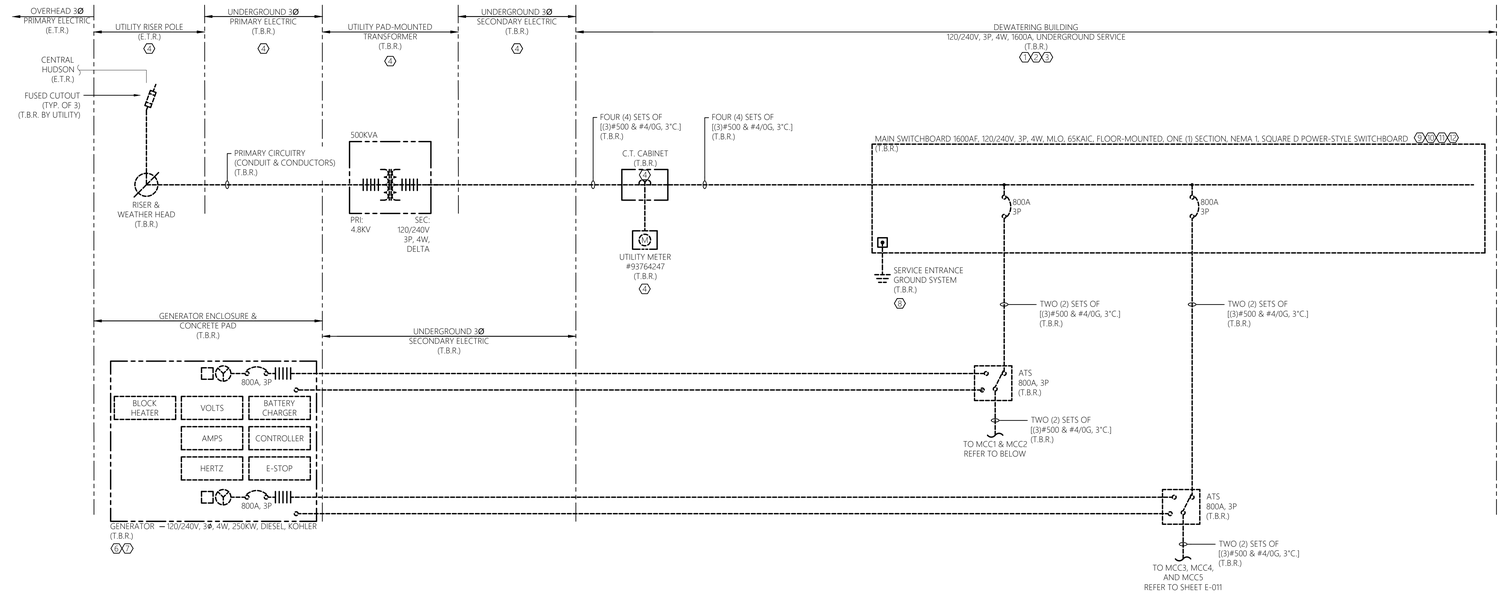

REFER TO SHEET E-011 FOR THE GENERAL DEMOLITION NOTES AND SHEET KEY NOTES THAT APPLY TO THIS SHEET.

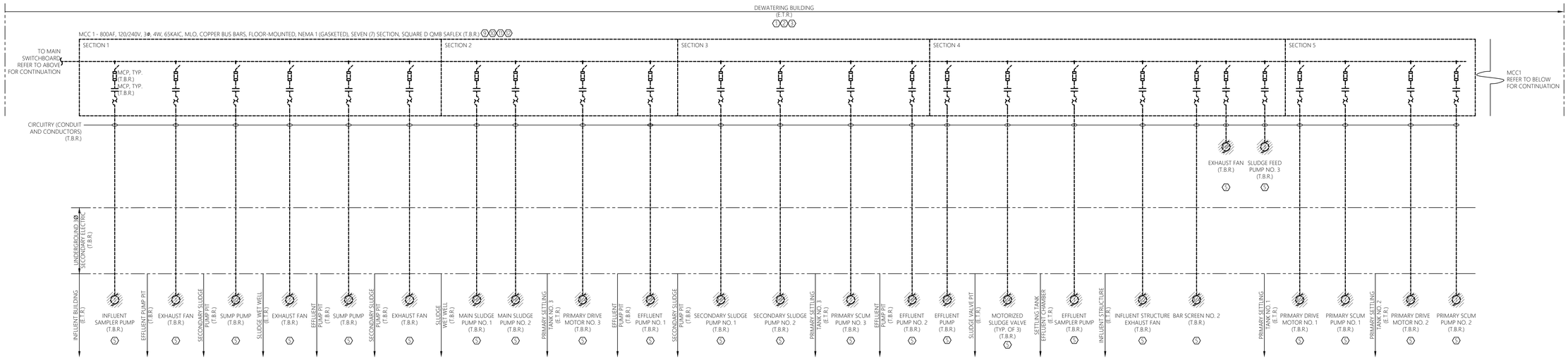

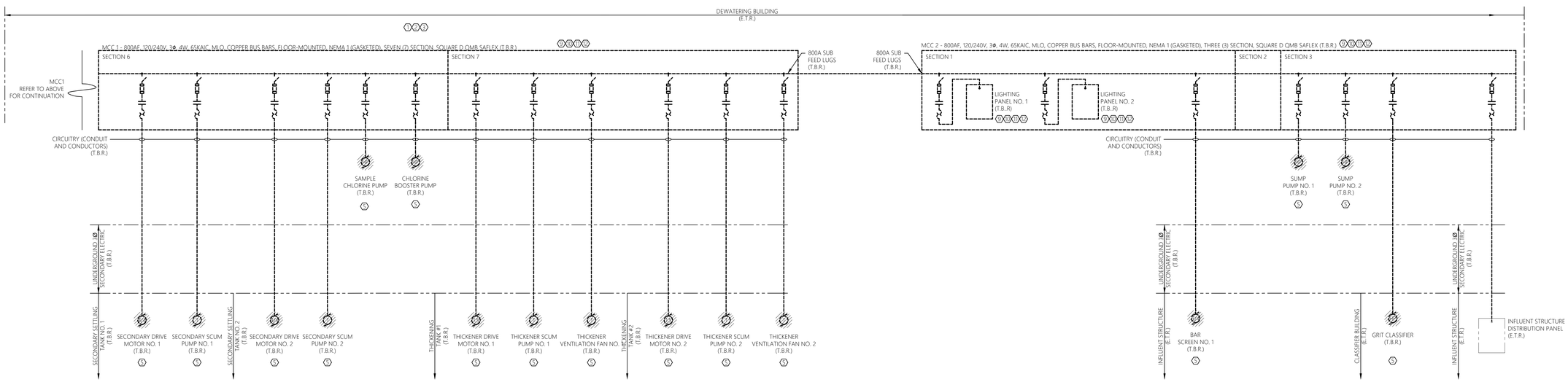

1 E-010 ELECTRICAL DEMOLITION SINGLE LINE DIAGRAM - MCC1 & MCC2
SCALE: NTS
CAESAR LANE WWTP

MHE ENGINEERING
33 Airport Center Drive, Suite 202
New Windsor, NY 12553
(845) 567-3100
111 Wheatfield Drive, Suite 1
Milford, PA 18337
(570) 296-2765

BID ADDENDUM

JADE STONE ENGINEERING

STATE OF NEW YORK · JEFFREY E. ROBINSON · 095896 · LICENSED PROFESSIONAL ENGINEER

HAZARDOUS MATERIAL NOTE:
THE SERVICES PROVIDED BY MHE, INCLUDING ALL WORK DEPICTED ON MHE PLANS, DO NOT INCLUDE SERVICES RELATED TO THE IDENTIFICATION, CONTROLS OR HANDLING OF HAZARDOUS MATERIALS, INCLUDING SUCH MATERIALS AS ASBESTOS AND LEAD PAINT. ALL TESTING, IDENTIFICATION, ABATEMENT, CONTROLS, AND HANDLING OF HAZARDOUS MATERIALS SHALL BE UNDERTAKEN BY A HAZARDOUS MATERIAL CONSULTANT AND CERTIFIED PROFESSIONALS. IF SUCH MATERIALS HAVE BEEN IDENTIFIED, CONTRACTOR WILL COMMUNICATE DIRECTLY WITH HAZARDOUS MATERIAL PROFESSIONAL FOR THE PERFORMANCE OF ANY WORK ON OR ADJACENT TO SAID MATERIALS. IF UNIDENTIFIED MATERIALS OF CONCERN ARE ENCOUNTERED WHILE UNDERTAKING THE WORK SHOWN HEREON, CONTRACTOR SHALL IMMEDIATELY NOTIFY ENGINEER AND OWNER, AND SHALL OBTAIN DIRECTION FROM THE HAZARDOUS MATERIAL CONSULTANT PRIOR TO THE CONTINUATION OF WORK INVOLVING SUSPECTED MATERIAL.

UDIG·NY SAFE DIGGING STARTS HERE
CALL 811

UNAUTHORIZED ADDITION OR ALTERATION OF THIS PLAN IS A VIOLATION OF SECTION 7209(2) OF THE NEW YORK STATE EDUCATION LAW.

ALL PRODUCTION & INTELLECTUAL PROPERTY RIGHT RESERVED ©

CAESARS LANE WWTP EXPANSION PROJECT: PHASE 2
145 CAESARS LN.
NEW WINDSOR, NY 12553
FOR TOWN OF NEW WINDSOR
555 UNION AVE.
NEW WINDSOR, NY 12553

ELECTRICAL DEMOLITION SINGLE LINE DIAGRAMS

REVISIONS

NO.	DESCRIPTION	DATE

ISSUED DATE:	06 JUNE, 2025
DESIGN BY:	RRM
DRAWN BY:	CDJ
CHECKED BY:	MGR
REVIEWED BY:	JER

SHEET NO.
E-010

PROJECT # 18-732 PHASE #

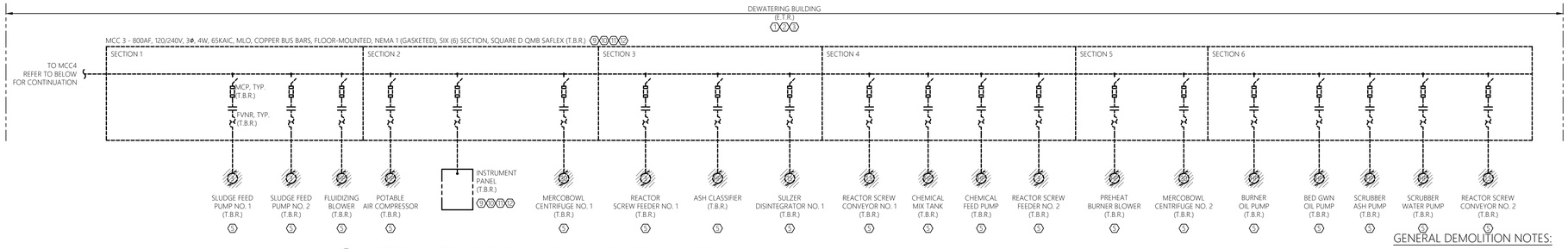

ELECTRICAL DEMOLITION SINGLE LINE DIAGRAM - MCC 3

1 / E-011 SCALE: NTS — CAESAR LANE WWTP

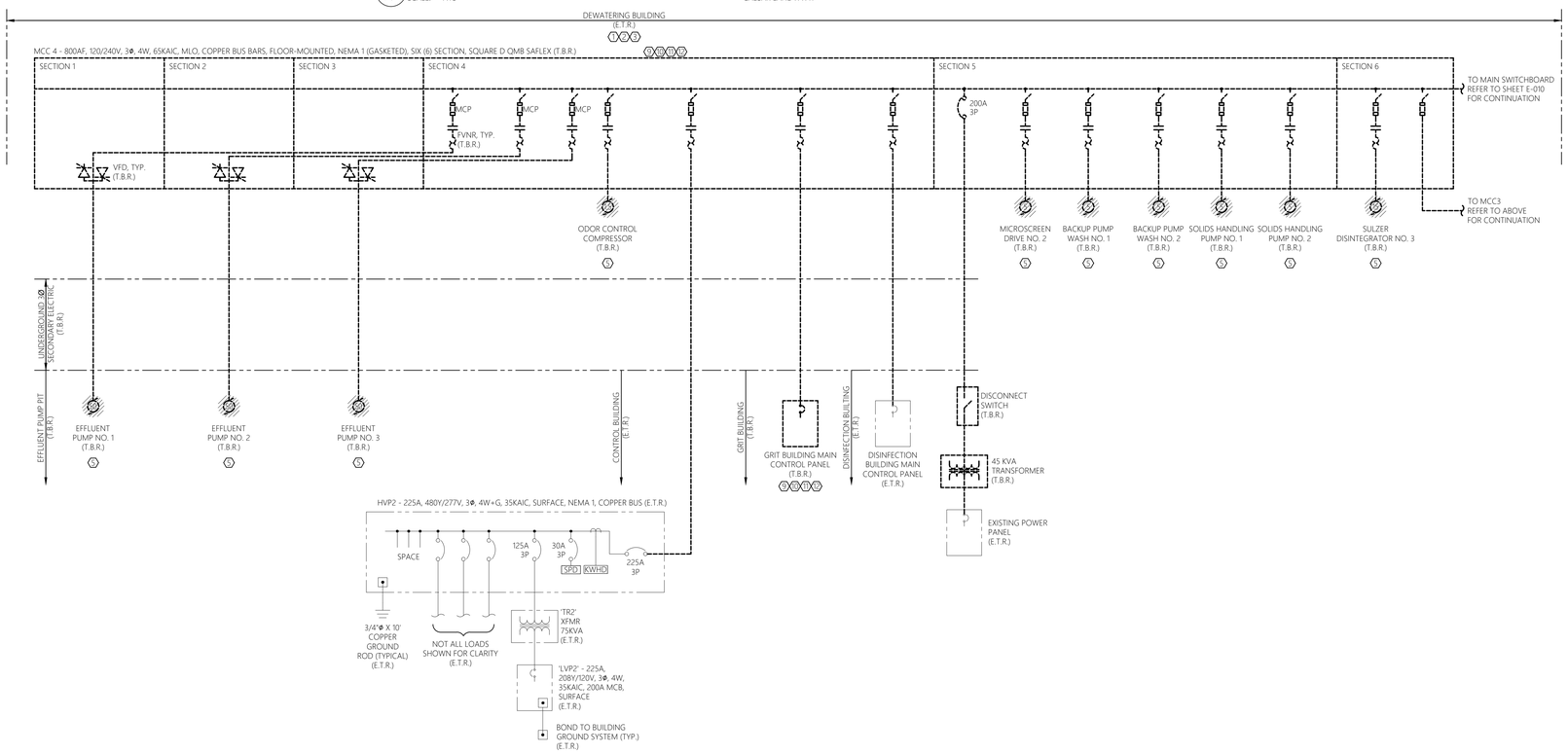

ELECTRICAL DEMOLITION SINGLE LINE DIAGRAM - MCC 4

2 / E-011 SCALE: NTS — CAESAR LANE WWTP

THE GENERAL DEMOLITION NOTES AND SHEET KEY NOTES ON THIS SHEET, ALSO APPLY TO SHEET E-010.

GENERAL DEMOLITION NOTES:

1. REFER TO E-001 FOR ELECTRICAL LEGENDS, ABBREVIATIONS AND GENERAL PROJECT NOTES.
2. ITEMS INDICATED TO BE REMOVED:
   - 2.1. REMOVE ALL CONDUCTORS AND EXPOSED CONDUIT BACK TO SOURCE (UOI).
   - 2.2. REMOVE CIRCUIT WIRING AND CIRCUIT BREAKER FROM SOURCE PANEL (UOI).
   - 2.3. REMOVE ALL ASSOCIATED CONTROL CONDUCTORS, CONDUIT, AND DEVICES (UOI).
   - 2.4. REMOVE ASSOCIATED STARTERS, DISCONNECTS, CONTROL STATIONS, AND ALL ASSOCIATED CIRCUITRY (UOI).
   - 2.5. REMOVE EQUIPMENT PADS & MOUNTING HARDWARE, BRACKETS, ACCESSORIES, ETC…(UOI).
   - 2.6. REVISE PANELBOARD AND MOTOR CONTROL CENTER DIRECTORIES/NAME PLATES AS CHANGES OCCUR (UOI).
3. THESE DEMOLITION DRAWINGS ARE SCHEMATIC IN NATURE AND ARE BASED ON CURSORY FIELD OBSERVATION AND EXISTING DRAWINGS. IT IS NOT THE INTENTION OF THESE DRAWINGS TO INDICATE EVERY DEVICE/FIXTURE REQUIRING REMOVAL/DEMO RATHER GENERAL SYSTEMS WHICH ARE TO BE REMOVED; CLOSE COORDINATION BETWEEN ALL TRADE CONTRACTORS REQUIRED.
4. COORDINATE WITH ALL CONTRACT DRAWINGS AND TRADE CONTRACTORS FOR ADDITIONAL EQUIPMENT THAT IS TO BE DEMOLISHED. FOR ALL EQUIPMENT SHOWN/INDICATED FOR REMOVAL, DISCONNECT AND REMOVE ELECTRICAL CIRCUIT INCLUDING CONDUCTORS AND CONDUIT BACK TO SOURCE.
5. CIRCUITS NOT IN AREA OF WORK THAT ARE AFFECTED BY WORK SHALL BE OPERATIONAL DURING PROJECT. PROVIDE TEMPORARY CIRCUITS AS NECESSARY.
6. CIRCUIT, EQUIPMENT, AND DEVICE REMOVAL SHALL NOT AFFECT THE INTEGRITY OR FUNCTIONALITY OF CIRCUITS TO REMAIN. ALL CIRCUITS TO REMAIN SHALL BE MAINTAINED. PROVIDE ALL NECESSARY CIRCUIT MODIFICATIONS AND EXTENSIONS.
7. THE COMPLETE ELECTRICAL DISTRIBUTION SYSTEM, INCLUDING ALL CONDUCTORS AND CIRCUITRY NOT SHOWN FOR CLARITY. CONTRACTOR TO FIELD VERIFY.
8. COORDINATE ALL ASPECTS OF SEQUENCE OF REMOVAL WITH THE OWNER, ENGINEER, AND ALL TRADE CONTRACTORS.
9. WHERE REMOVALS LEAVE HOLES AND DAMAGED SURFACES EXPOSED IN THE FINISHED WORK, PATCH AND REPAIR THESE HOLES AND DAMAGED SURFACES TO MATCH ADJACENT FINISHED SURFACES. WHERE NEW WORK IS TO BE APPLIED TO EXISTING SURFACES, PERFORM REMOVALS, AND PATCHING IN A MANNER TO PRODUCE SURFACES SUITABLE FOR RECEIVING NEW WORK. COORDINATE ALL WORK WITH OWNER, ENGINEER, AND ALL TRADE CONTRACTORS.
10. REFER TO ELECTRICAL SITE PLAN & FLOOR PLAN SHEETS FOR GENERAL EQUIPMENT LOCATIONS.
11. REFER TO ELECTRICAL SCHEDULE AND DETAIL SHEETS FOR ADDITIONAL REMOVAL INFORMATION/REQUIREMENTS.
12. WHERE REMOVAL OF CONDUIT SYSTEM IS NOT FEASIBLE CONTRACTOR TO REMOVE ALL CONDUCTORS FROM CONDUIT SYSTEM, CUT FLUSH, CAP CONDUIT SYSTEM, AND ABANDON IN PLACE. CONTRACTOR TO FIELD VERIFY AND COORDINATE FINAL REQUIREMENTS WITH THE OWNER, TYPICAL.
13. ALL UTILITY CHARGES RESULTING FROM THE REMOVAL OF THE EXISTING ELECTRICAL SERVICE SHALL BE BILLED DIRECTLY TO THE OWNER FROM THE UTILITY COMPANY.

SHEET KEY NOTES:

1. WWTP IS TO BE OPERATIONAL AT ALL TIMES. PROVIDE TEMPORARY POWER PROVISIONS AS REQUIRED TO FACILITATE NORMAL WWTP OPERATION DURING ELECTRICAL DEMOLITION AND INSTALLATION. PROVIDE ALL NECESSARY EQUIPMENT, DEVICES, CABLING, ETC… AS REQUIRED FOR AN OVERALL COMPLETE AND OPERABLE TEMPORARY POWER SYSTEM. CONTRACTOR TO MINIMIZE DOWN TIMES TO THE GREATEST EXTENT POSSIBLE. COORDINATE ALL REQUIREMENTS WITH THE OWNER AND ALL TRADE CONTRACTORS. REFER TO SPECIFICATIONS FOR ADDITIONAL INFORMATION REGARDING TEMPORARY POWER.
2. CONTRACTOR TO PROVIDE TEMPORARY POWER PLAN IN WRITING TO ENGINEER FOR APPROVAL PRIOR TO PERFORMING ELECTRICAL SERVICE DISRUPTIONS.
3. CONTRACTOR TO NOT COMMENCE ELECTRICAL DEMOLITION UNTIL TEMPORARY POWER PROVISIONS HAVE BEEN ESTABLISHED AND APPROVED BY THE ENGINEER. NOTE, IT IS THE INTENTION THAT THE NEW ELECTRICAL SERVICE BE INSTALLED, TESTED, AND OPERATIONAL BEFORE THE EXISTING ELECTRICAL SERVICE BE REMOVED.
4. CONTRACTOR TO CLOSELY COORDINATE FINAL REMOVAL REQUIREMENTS OF ALL UTILITY OWNED EQUIPMENT, INCLUDING BUT NOT LIMITED TO, UTILITY DEMAND METER, C.T. CABINET, FUSED CUTOUTS, PAD-MOUNTED TRANSFORMERS, SWITCHGEAR, GROUNDING, AND CIRCUITRY (CONDUIT & CONDUCTORS) WITH THE UTILITY. REFER TO THE 'GENERAL NOTES' SECTION ON SHEET E-001 FOR UTILITY CONTACT INFORMATION AND ASSOCIATED WORK ORDER NUMBER.
5. NOT ALL ASSOCIATED CONTROLS, STARTERS, DISCONNECTS & CONTROLS CIRCUITRY MAY BE SHOWN FOR CLARITY. CONTRACTOR TO FIELD VERIFY AND COMPLETELY REMOVE ALL ASSOCIATED CONTROLS, STARTERS, DISCONNECTS & CONTROLS CIRCUITRY (CONDUIT & CONDUCTORS) BACK TO THE SOURCE ASSOCIATED WITH EQUIPMENT SCHEDULED FOR REMOVAL. COORDINATE FINAL REQUIREMENTS WITH THE OWNER, ENGINEER, AND APPLICABLE TRADE CONTRACTORS.
6. CONTRACTOR TO REMOVE EMERGENCY GENERATOR SYSTEM (EGS) IN ITS ENTIRETY, INCLUDING BUT NOT LIMITED TO, ENGINE BLOCK HEATER, BATTERY CHARGER, CONTROLS, ALARMS, AUTOMATIC TRANSFER SWITCH, OVER-CURRENT PROTECTIVE DEVICE, EQUIPMENT SKID, CONCRETE PAD, ENCLOSURE, FUEL TANK, AND ALL ASSOCIATED CIRCUITRY (CONDUIT & CONDUCTORS) BACK TO SOURCE. COORDINATE CLOSELY WITH ALL TRADE CONTRACTORS, OWNER, AND ENGINEER.
7. GENERATOR AND ALL ASSOCIATED EQUIPMENT, DEVICES, CONTROLS, AND AUTOMATIC TRANSFER SWITCH ARE TO BECOME THE PROPERTY OF THE OWNER UPON DISCONNECTION AND REMOVAL. CONTRACTOR TO MOVE GENERATOR AND ALL ASSOCIATED EQUIPMENT TO LOCATION ON SITE AS DESIGNATED BY THE OWNER. COORDINATE FINAL REQUIREMENTS CLOSELY WITH OWNER AND ENGINEER.
8. CONTRACTOR TO REMOVE SERVICE ENTRANCE GROUND SYSTEM IN ITS ENTIRETY, INCLUDING BUT NOT LIMITED TO, ALL ASSOCIATED GROUND RODS, BONDING EQUIPMENT, AND CABLING. CONTRACTOR TO FIELD VERIFY AND PROVIDE COMPLETE ELECTRICAL DEMOLITION AS REQUIRED.
9. CONTRACTOR TO DISCONNECT, MAKE ELECTRICALLY SAFE, AND REMOVE/DEMOLISH IN ITS ENTIRETY. EQUIPMENT IS TO BECOME PROPERTY OF THE CONTRACTOR AND REMOVED FROM THE SITE IN ITS ENTIRETY. OWNER HAS THE RIGHT TO MAINTAIN ANY EQUIPMENT, COMPONENTS, DEVICES, CONTROLS, ETC… SCHEDULED FOR REMOVAL. REFER TO SPECIFICATIONS FOR ADDITIONAL INFORMATION AND COORDINATE FINAL REQUIREMENTS WITH THE OWNER.
10. NOT ALL EXISTING INTERNAL CABLING/COMPONENTS SHOWN FOR CLARITY. CONTRACTOR TO FIELD VERIFY AND REMOVE ALL ASSOCIATED INTERNAL CABLING/COMPONENTS IN THEIR ENTIRETY.
11. CIRCUIT BREAKER RATINGS, MOTOR HORSEPOWER RATINGS AND ASSOCIATED CABLE SIZES/QUANTITIES ARE BASED UPON EXISTING DRAWINGS AND CURSORY FIELD OBSERVATIONS. CONTRACTOR TO FIELD VERIFY ACTUAL RATINGS OF ANY EXISTING TO REMAIN EQUIPMENT PRIOR TO COMMENCEMENT OF DEMOLITION.
12. REFER TO ELECTRICAL DEMOLITION PLANS, SCHEDULES AND DETAILS FOR ADDITIONAL DEMOLITION INFORMATION/REQUIREMENTS. CONTRACTOR TO COORDINATE ALL EQUIPMENT SCHEDULED FOR REMOVAL AND FINAL SEQUENCE OF REMOVAL REQUIREMENTS WITH ALL TRADE CONTRACTORS, OWNER, AND ENGINEER. PRIOR TO COMMENCEMENT OF DEMOLITION. CONTRACTOR TO FIELD VERIFY AND PROVIDE AS REQUIRED. FOR ALL EQUIPMENT SCHEDULED FOR REMOVAL, DISCONNECT AND REMOVE ELECTRICAL CIRCUITRY (CONDUIT & CONDUCTORS) BACK TO SOURCE AND ALL ASSOCIATED DISCONNECTS, STARTERS, CONTROLS AND CONTROL CIRCUITRY, AS WELL AS, ALL MOUNTING HARDWARE, BRACKETS, ACCESSORIES, ETC…
13. UPON REMOVAL OF EQUIPMENT, CONTRACTOR TO REMOVE CONCRETE EQUIPMENT PAD IN ITS ENTIRETY. FILL ALL HOLES/PENETRATIONS WITHIN THE FLOOR SLAB. PATCH AND REPAIR FLOOR AS NECESSARY. REFER TO ELECTRICAL DETAILS FOR ADDITIONAL INFORMATION. COORDINATE FINAL REQUIREMENTS WITH THE OWNER.

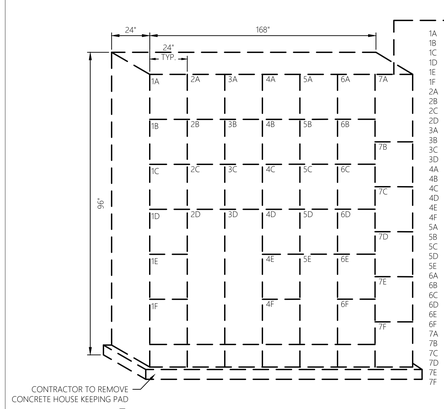

ELECTRICAL ELEVATION - MOTOR CONTROL CENTER MCC1

3 / E-011 SCALE: NTS — CAESAR LANE WWTP

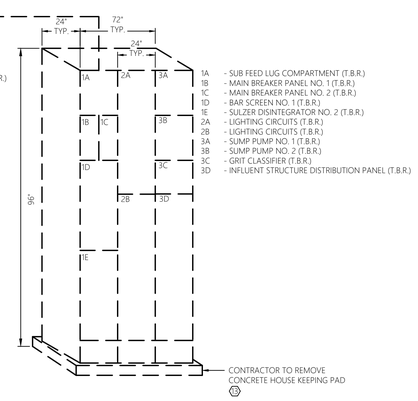

ELECTRICAL ELEVATION - MOTOR CONTROL CENTER MCC2

4 / E-011 SCALE: NTS — CAESAR LANE WWTP

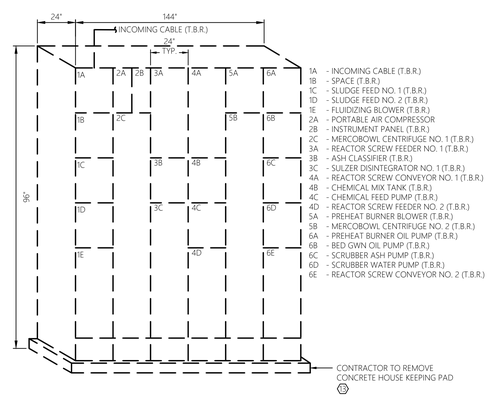

ELECTRICAL ELEVATION - MOTOR CONTROL CENTER MCC3

5 / E-011 SCALE: NTS — CAESAR LANE WWTP

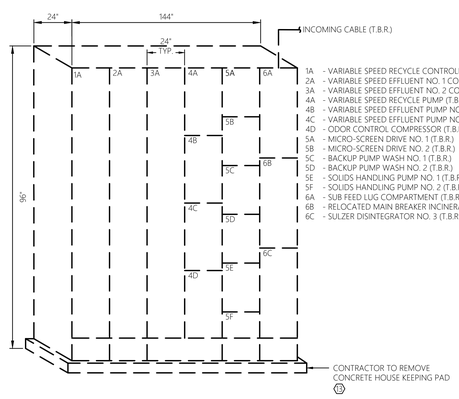

ELECTRICAL ELEVATION - MOTOR CONTROL CENTER MCC4

6 / E-011 SCALE: NTS — CAESAR LANE WWTP

MHE ENGINEERING
33 Airport Center Drive, Suite 202
New Windsor, NY 12553
(845) 567-3100
111 Wheatfield Drive, Suite 1
Milford, PA 18337
(570) 296-2765

BID ADDENDUM

JADE STONE ENGINEERING

STATE OF NEW YORK — JEFFREY E ROBINSON — 095896 — LICENSED PROFESSIONAL ENGINEER

HAZARDOUS MATERIAL NOTE:

THE SERVICES PROVIDED BY MHE, INCLUDING ALL WORK DEPICTED ON MHE PLANS, DO NOT INCLUDE SERVICES RELATED TO THE IDENTIFICATION, CONTROLS OR HANDLING OF HAZARDOUS MATERIALS, INCLUDING SUCH MATERIALS AS ASBESTOS AND LEAD PAINT. ALL TESTING, IDENTIFICATION, ABATEMENT, CONTROLS, AND HANDLING OF HAZARDOUS MATERIALS SHALL BE UNDERTAKEN BY A HAZARDOUS MATERIAL CONSULTANT AND CERTIFIED PROFESSIONALS. IF SUCH MATERIALS HAVE BEEN IDENTIFIED, CONTRACTOR WILL COMMUNICATE DIRECTLY WITH HAZARDOUS MATERIAL PROFESSIONAL FOR THE PERFORMANCE OF ANY WORK ON OR ADJACENT TO SAID MATERIALS. IF UNIDENTIFIED MATERIALS OF CONCERN ARE ENCOUNTERED WHILE UNDERTAKING THE WORK SHOWN HEREON, CONTRACTOR SHALL IMMEDIATELY NOTIFY ENGINEER AND OWNER, AND SHALL OBTAIN DIRECTION FROM THE HAZARDOUS MATERIAL CONSULTANT PRIOR TO THE CONTINUATION OF WORK INVOLVING SUSPECTED MATERIAL.

UDIG·NY SAFE DIGGING STARTS HERE
CALL 811

UNAUTHORIZED ADDITION OR ALTERATION OF THIS PLAN IS A VIOLATION OF SECTION 7209(2) OF THE NEW YORK STATE EDUCATION LAW.

ALL PRODUCTION & INTELLECTUAL PROPERTY RIGHT RESERVED ©

CAESARS LANE WWTP EXPANSION PROJECT: PHASE 2
145 CAESARS LN.
NEW WINDSOR, NY 12553
FOR TOWN OF NEW WINDSOR
555 UNION AVE.
NEW WINDSOR, NY 12553

ELECTRICAL DEMOLITION SINGLE LINE DIAGRAMS

REVISIONS

NO.	DESCRIPTION	DATE

ISSUED DATE:	06 JUNE, 2025
DESIGN BY:	RRM
DRAWN BY:	CDJ
CHECKED BY:	MGR
REVIEWED BY:	JER

SHEET NO.

E-011

PROJECT # 18-732 PHASE #

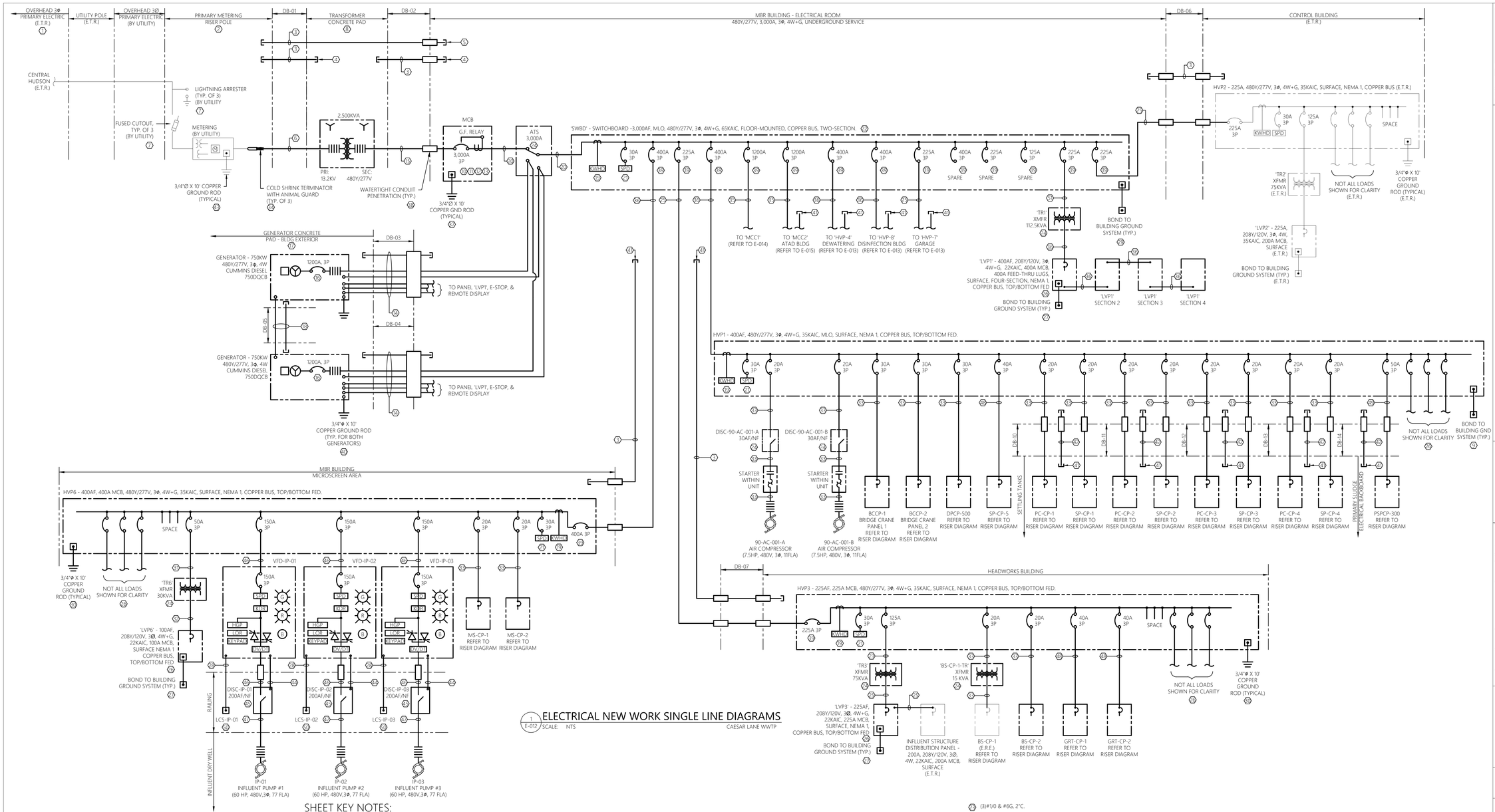

1 E-012 ELECTRICAL NEW WORK SINGLE LINE DIAGRAMS
SCALE: NTS
CAESAR LANE WWTP

GENERAL SHEET NOTES:

1. REFER TO E-001 FOR ELECTRICAL LEGENDS, ABBREVIATIONS AND GENERAL PROJECT NOTES.
2. NEW ELECTRICAL EQUIPMENT BASIS OF DESIGN - EATON
3. PROVIDE GROUNDING PER NEC FOR ALL ELECTRICAL EQUIPMENT AND ASSOCIATED EQUIPMENT.
4. ALL CONDUCTORS AND EQUIPMENT NOT SHOWN FOR CLARITY. COORDINATE WITH ALL PRIME CONTRACTORS AND PROVIDE COMPLETE ELECTRICAL CIRCUITING FOR ALL INSTALLED EQUIPMENT. ALL REQUIREMENTS TO BE PER NEC.
5. ALL UTILITY CHARGES RESULTING FROM THIS SERVICE ENTRANCE DESIGN SHALL BE BILLED DIRECTLY TO THE OWNER FROM THE UTILITY COMPANY.
6. REFER TO CONTROL DIAGRAMS FOR ADDITIONAL INFORMATION/REQUIREMENTS.
7. REFER TO ELECTRICAL FLOOR PLAN DRAWINGS AND ELECTRICAL SITE PLAN FOR GENERAL LOCATIONS AND DUCT BANK INFORMATION.
8. REFER TO ELECTRICAL DETAIL SHEETS AND SCHEDULE SHEETS FOR ADDITIONAL INFORMATION/REQUIREMENTS.
9. CONTRACTOR TO PROVIDE ADDITIONAL LUG TERMINATION KITS OR PIN ADAPTORS WITHIN EQUIPMENT SHOWN/SPECIFIED AS NECESSARY TO TERMINATE THE NUMBER OF SETS OF CONDUCTORS AND SIZE SHOWN/SPECIFIED.
10. CIRCUITS SHOWN ARE POWER. REFER TO CONTROL RISER DIAGRAMS FOR INSTRUMENTATION AND CONTROL CIRCUITS. REFER TO SCHEDULES FOR ADDITIONAL CIRCUITS.
11. NOT ALL REQUIRED THRU-WALL AND THRU-FLOOR WATERTIGHT PENETRATIONS SHOWN FOR CLARITY. CONTRACTOR TO PROVIDE A THRU-WALL/FLOOR WATERTIGHT PENETRATION FOR ALL PENETRATIONS WITHIN BUILDING EXTERIOR WALLS AND FLOORS. REFER TO DETAIL SHEETS FOR ADDITIONAL INFORMATION.
12. CONTRACTOR SHALL INCLUDE A SHORT CIRCUIT, COORDINATION, AND ARC FLASH HAZARD ANALYSIS FOR THIS PROJECT. STUDY SHALL BE PERFORMED BY A NEW YORK STATE LICENSED PROFESSIONAL ENGINEER. SUBMIT SHORT CIRCUIT REPORT FINDINGS PRIOR TO SUBMITTAL DOCUMENTS ON ELECTRICAL GEAR & CONFIRM ALL PROPOSED AIC RATINGS. PROVIDE COORDINATION AND ARC FLASH HAZARD ANALYSIS FOR ALL ELECTRICAL EQUIPMENT. CONTRACTOR SHALL PROVIDE THE APPROPRIATE WARNING STICKERS ON ALL PANELBOARDS, CONTROL PANELS, AND EQUIPMENT DISCONNECTS. COORDINATION AND ARC FLASH HAZARD ANALYSIS SHALL BE IN ACCORDANCE WITH THE LATEST IEEE & NFPA 70E REQUIREMENTS. CONTRACTOR TO PROVIDE STUDY RESULTS IN REPORT FORMAT AND SUBMIT TO THE ENGINEER FOR REVIEW. REFER TO SPECIFICATIONS FOR ADDITIONAL INFORMATION.
13. CONTRACTOR TO COORDINATE OVERALL SEQUENCE OF CONSTRUCTION WITH APPLICABLE CONTRACTOR, OWNER, AND ENGINEER
14. SERVICE EQUIPMENT TO BE LABELED WITH MAX AVAILABLE FAULT CURRENT PER NEC 110.24. CONTRACTOR TO PROVIDE A SHORT CIRCUIT ANALYSIS TO DETERMINE THE MAX AVAILABLE FAULT CURRENT. ANALYSIS TO BE PERFORMED BY A NEW YORK STATE LICENSED PROFESSIONAL ENGINEER. SUBMIT SHORT CIRCUIT REPORT TO ENGINEER FOR APPROVAL DURING THE SUBMITTAL PHASE. REFER TO SPECIFICATIONS FOR ADDITIONAL INFORMATION.
15. REFER TO DUCT BANK SCHEDULE FOR ADDITIONAL SPARE CONDUIT REQUIREMENTS.
16. ALL CONDUCTORS TO BE COPPER AND CONTAIN THWN OR XHHW INSULATION (UNLESS OTHERWISE NOTED).
17. CONTRACTOR TO COMPLY WITH THE HIGH VOLTAGE PROXIMITY ACT AND ALL NESC REQUIREMENTS WHEN ERECTING STRUCTURES AND UTILIZING EQUIPMENT NEAR ENERGIZED UTILITY LINES. ALL CRANES, ETC. TO BE KEPT A MINIMUM OF 10'-0" FROM ENERGIZED UTILITY LINES. TYPICAL.

SHEET KEY NOTES:

1. FINAL CONNECTIONS BETWEEN CENTRAL HUDSON'S EXISTING OVERHEAD FACILITIES AND CUSTOMERS FACILITIES (SPECIFIED AS PART OF CONTRACT) SHALL BE MADE BY CENTRAL HUDSON. REFER TO SHEET E-001 FOR UTILITY CONTACT INFORMATION AND ASSOCIATED WORK ORDER NUMBER. CONTRACTOR TO REFERENCE WORK ORDER NUMBER WHEN CONTACTING THE UTILITY.
2. REFER TO ELECTRICAL SINGLE LINE DIAGRAM, SCHEDULES, DETAILS, & SPECIFICATIONS FOR ADDITIONAL INFORMATION/REQUIREMENTS. CONTRACTOR TO COORDINATE ALL WORK AND REQUIREMENTS ASSOCIATED WITH THE PROPOSED ELECTRICAL SERVICE WITH THE UTILITY COMPANY INCLUDING BUT NOT LIMITED TO THE FOLLOWING: PRIMARY METERING RISER POLE, OVERHEAD 3Ø PRIMARY ELECTRIC, METERING, EQUIPMENT LOCATIONS, AND POINT OF SUPPLY. REFER TO SHEET E-001 FOR UTILITY CONTACT INFORMATION AND ASSOCIATED WORK ORDER. CONTRACTOR TO REFERENCE WORK ORDER NUMBER WHEN CONTACTING CENTRAL HUDSON.
3. SPARE 4" CONDUIT.
4. PROVIDE SPARE CONDUIT FROM UTILITY RISER POLE TO UTILITY PAD-MOUNTED TRANSFORMER AND FROM UTILITY PAD-MOUNTED TRANSFORMER TO MBR BUILDING AS SHOWN. STUB CONDUIT ADJACENT TO SERVICE EQUIPMENT OR AS DIRECTED BY UTILITY/OWNER. PROVIDE PULL STRING AND CAP BOTH ENDS. LABEL BOTH ENDS OF SPARE CONDUIT INDICATING ORIGIN/DESTINATION.
5. PROVIDE SPARE CONDUIT FROM UTILITY RISER POLE TO MBR BUILDING. CONDUIT INTENDED FOR COMMUNICATION SERVICES. PROVIDE INNERDUCT SYSTEM WITHIN CONDUIT AS SPECIFIED ON ELECTRICAL DETAILS. REFER TO SITE PLAN FOR ADDITIONAL INFORMATION.
6. PROVIDE AS 15KV CABLE SYSTEM. PROVIDE AS (4)#4/0 ALUMINUM, UL TYPE MV-105, 133% INSULTAION LEVEL, 220 MILS, EPR, AND COPPER TAPE SHIELD. PROVIDE AS GENERAL CABLE SPEC 6360 OR APPROVED EQUAL. CONTRACTOR TO PROVIDE 45'-0" OF COILED PRIMARY CONDUCTOR SLACK AT THE UTILITY RISER POLE AND 20'-0" OF COILED PRIMARY CONDUCTOR SLACK AT THE UTILITY PAD-MOUNTED TRANSFORMER. ALL PRIMARY CONNECTIONS AT THE UTILITY RISER POLE AND PAD-MOUNTED TRANSFORMER ARE BY THIS CONTRACT. REFER TO SPECIFICATIONS FOR ADDITIONAL INFORMATION/REQUIREMENTS.
7. PROVIDED BY UTILITY. TYPICAL OF FUSED CUTOUTS, LIGHTING ARRESTERS, METERING (METER, CURRENT TRANSFORMERS, POTENTIAL TRANSFORMERS, AND ALL WIRING AND CONDUCTORS BETWEEN COMPONETS OF THE PRIMARY METERING SYSTEM). THIS CONTRACT IS RESPONSIBLE FOR PROVIDING AND INSTALLING POLE CROSS ARMS AND BRACING, PRIMARY INSULATORS, GROUND RODS, GROUND BONDING, COLD SHRINK TERMINATOR KITS, ANIMAL GUARDS, THREE PHASE FIBERGLASS EQUIPMENT BRACKET, POLYMER VISE TOP INSULATOR, NEUTRAL ATTACHMENT, PRIMARY RISER (CONDUCTORS AND CONDUIT). REFER TO SITE PLAN, POLE DETAILS ON SHEET E-035, AND SPECIFICATIONS FOR ADDITIONAL INFORMATION/REQUIREMENTS.
8. PROPOSED PAD-MOUNTED TRANSFORMER BY THIS CONTRACT. THIS CONTRACT RESPONSIBLE FOR THE TRANSFORMER, CONCRETE PAD, CONCRETE VAULT, AND GROUNDING AS SHOWN. REFER TO 'TYPICAL UTILITY TRANSFORMER PAD AND VAULT DETAIL' FOR ADDITIONAL INFORMATION. TRANSFORMER TO BE KEPT A MINIMUM OF 10'-0" FROM ALL STRUCTURES, ACCESS DRIVES, BUILDINGS, UNDERGROUND UTILITIES, AND ALL OTHER ABOVE GRADE EQUIPMENT. IN ADDITION, TRANSFORMER TO BE KEPT A MINIMUM OF 25'-0" FROM ABOVE GRADE EXPOSED GAS LINES, GAS METERS, WATER LINES, AND SEWER LINES. FINAL LOCATION TO BE COORDINATED IN THE FIELD WITH THE UTILITY, OWNER, ENGINEER AND APPLICABLE CONTRACTOR TO AVOID CONFLICT WITH EXISTING SITE CONDITIONS AND PROPOSED WORK, AS WELL AS COMPLY WITH ALL UTILITY REQUIREMENTS. REFER TO THE ELECTRICAL SINGLE LINE DIAGRAM & SPECIFICATIONS FOR ADDITIONAL INFORMATION/REQUIREMENTS.
9. CONTRACTOR TO BOND TO BUILDING GROUND SYSTEM AND LIGHTING PROTECTION SYSTEM. UTILIZE #1/0 COPPER GROUND CONDUCTOR UNLESS OTHERWISE NOTED. REFER TO ELECTRICAL DETAILS FOR ADDITIONAL INFORMATION/REQUIREMENTS.
10. MAIN SERVICE DISCONNECT. PROVIDE AS SERVICE ENTRANCE RATED. PROVIDE SERVICE ENTRANCE LABEL AND LABEL INDICATING SWITCH POSITION PER NEC. IN ADDITION MAIN SERVICE DISCONNECT TO BE LABELED WITH MAX AVAILABLE FAULT CURRENT. REFER TO SPECIFICATIONS FOR ADDITIONAL INFORMATION.
11. MAIN SERVICE DISCONNECT TO CONTAIN GROUND FAULT PROTECTION AND A DIGITRIP 1150+ ELECTRONIC TRIP UNIT WITH LSIG PROTECTION. MAIN SERVICE DISCONNECT TO BE A FIXED MOUNTED MAGNUM DS LOW VOLTAGE POWER CIRCUIT BREAKER AS MANUFACTURED BY EATON OR APPROVED EQUAL. PROVIDE PILOT LIGHT INDICATING LINE SIDE VOLTAGE IS PRESENT.
12. CIRCUIT BREAKER TO BE EQUIPPED WITH ARC FLASH REDUCTION MAINTENANCE SYSTEM. THIS FUNCTION IS TO BE ACTIVATED WITH A LOCAL SWITCH DIRECTLY ON THE CIRCUIT BREAKER. THIS FUNCTION IS REQUIRED TO COMPLY WITH NEC ARTICLE 240.87.
13. GROUND FAULT PROTECTION SYSTEM TO BE PERFORMANCE TESTED ONCE FIRST INSTALLED. TESTS TO BE IN ACCORDANCE WITH NEC 230.95 (C) AND UTILITY REQUIREMENTS. TESTS TO INCLUDE BUT ARE NOT LIMITED TO THE FOLLOWING: SECONDARY CURRENT INJECTION TEST. SUBMIT RESULTS TO ENGINEER AND UTILITY UPON COMPLETION.
14. GENERATOR CIRCUITRY TO INCLUDE:
    - 4 SETS OF [(4)#500 & #4/0G, 4" C] FROM PROPOSED GENERATOR TO ATS.
    - (12)#14 & (2)#18STP, 1" C FROM PROPOSED GENERATOR TO ATS.
    - BELDEN 9729, 1" C AND (4)#14, 3/4"C. FROM GENERATOR CONTROL SYSTEM TO REDUNDANT DISPLAY. REFER TO SPECIFICATIONS.
    - SPARE 4" C FROM PANEL GENERATOR ENCLOSURE TO MBR BUILDING ELECTRICAL ROOM.
    - (3)#2 & #8G, 1-1/2" C FROM GENERATOR LOAD CENTER TO PANEL LVP1.
    - (4)#14, 3/4" C FROM GENERATOR CONTROL SYSTEM TO REMOTE E-STOP
15. EIGHT (8) SETS OF [(4)#500, 4"C]. CONTRACTOR TO PROVIDE 20'-0" COILED SLACK AT THE UTILITY PAD-MOUNTED TRANSFORMER. CONTRACTOR IS RESPONSIBLE FOR SECONDARY TERMINATIONS AT THE UTILITY PAD-MOUNTED TRANSFORMER. CONTRACTOR TO COORDINATE ALL TRANSFORMER SECONDARY WORK WITH THE UTILITY. PROVIDE ADDITIONAL TERMINATION/LUG KITS AS REQUIRED TO TERMINATE ALL PROPOSED CONDUCTORS.
16. PROVIDE AS 100% RATED UNIT MOUNTED CIRCUIT BREAKER WITH ELECTRONIC LSI TRIP UNIT.
17. OUTDOOR EMERGENCY GENERATOR FOUNDATION AND EQUIPMENT PAD TO BE PROVIDED BY THIS CONTRACT. TYPICAL FOR (2) TWO GENERATOR UNITS. REFER TO SITE PLAN AND 'TYPICAL GENERATOR PAD DETAIL' FOR ADDITIONAL INFORMATION/REQUIREMENTS. CLOSELY COORDINATE ALL REQUIREMENTS WITH ALL OTHER TRADE CONTRACTORS.
18. FINAL GENERATOR INTERCONNECTION CIRCUITRY TO BE COORDINATED WITH THE EQUIPMENT MANUFACTURER AND PROVIDED AS REQUIRED. FOR BIDDING PURPOSES ASSUME CIRCUITRY BETWEEN GENERATOR UNITS TO INCLUDE:
    - (12)#14 & (2)#18STP, 1" C
    - BELDEN 9729, 1"C.
    - SPARE 4" C
19. PROVIDE CUSTOMER POWER METERING INTERNAL TO SWITCHBOARD/PANELBOARD. METER TO BE MODEL POWER XPERT METER 3000/1000 SERIES AS MANUFACTURED BY EATON OR APPROVED EQUAL. PROVIDE METER WITH OPTIONAL COMMUNICATIONS EXPANSION CARD TO ENABLE ETHERNET CONNECTION TO SCADA FOR MONITORING. PROVIDE ALL REQUIRED INTERNAL PROTECTION AND CABLING AS REQUIRED.
20. EIGHT (8) SETS OF [(4)#500 & #500G, 4"C].
21. PROVIDE SECONDARY SURGE PROTECTIVE DEVICE SUITABLE FOR INSTALLED SERVICE PER MANUFACTURERS RECOMMENDATIONS. AT MINIMUM DEVICE TO BE RATED FOR A SURGE CAPACITY RATING OF 200KA PER PHASE, BE A TYPE 1 DEVICE, 20KA NOMINAL DISCHARGE CURRENT, AND CONTAIN STANDARD PACKAGE OPTIONS/FEATURES. PROVIDE DEVICE INTERNAL TO MAIN SWITCHBOARD AND PROVIDE DISCONNECT AS REQUIRED. BOND TO BUILDING GROUND SYSTEM.
22. MAIN SWITCHBOARD TO BE FRONT ACCESSIBLE AND PROVIDED WITHIN A NEMA 1 ENCLOSURE. SWITCHBOARD ASSEMBLY TO BE RATED FOR A MINIMUM 65KAIC. IN ADDITION SWITCHBOARD TO BE PROVIDED WITH INTEGRAL SURGE PROTECTION AND CUSTOMER METERING. REFER TO ELECTRICAL ELEVATION AND SPECIFICATIONS FOR ADDITIONAL INFORMATION/REQUIREMENTS. SWITCHBOARD TO BE CONFIGURED FOR TOP/BOTTOM CONDUIT ENTRY WITH THE MAIN BREAKER ON THE RIGHT MOST SECTION WITH ALL SUBSEQUENT SECTIONS TO THE LEFT (WHILE LOOKING AT THE SWITCHBOARD FRONT). SWITCHBOARD TO BE AS MANUFACTURED BY EATON OR APPROVED EQUAL.
23. (3)#1/0 & #6G, 2"C.
24. REFER TO ELECTRICAL SCHEDULES AND SPECIFICATIONS FOR ADDITIONAL INFORMATION/REQUIREMENTS.
25. (4)#4/0 & #4G, 4"C.
26. NOT ALL LOADS SHOWN FOR CLARITY. REFER TO EQUIPMENT CONNECTION SCHEDULE, PANEL SCHEDULES, ELEVATIONS, AND SUPPLEMENTAL RISER DIAGRAMS FOR ADDITIONAL CIRCUITING INFORMATION/REQUIREMENTS.
27. CONTRACTOR TO BOND TO BUILDING GROUND SYSTEM. UTILIZE #4 COPPER GROUND CONDUCTOR UNLESS OTHERWISE NOTED. REFER TO ELECTRICAL DETAILS FOR ADDITIONAL INFORMATION/REQUIREMENTS.
28. (16)#14, 1"C
29. CONTRACTOR TO BOND TO BUILDING GROUND SYSTEM AND LIGHTING PROTECTION SYSTEM. UTILIZE #400 COPPER GROUND CONDUCTOR UNLESS OTHERWISE NOTED. REFER TO ELECTRICAL DETAILS FOR ADDITIONAL INFORMATION/REQUIREMENTS.
30. CONTRACTOR TO PROVIDE TWO (2) 3/4"Ø x 10' COPPER GROUND RODS. PROVIDE GROUNDING ELECTRODE FOR BUILDING SERVICE PER NEC. GROUND RODS TO BE PLACED AT MINIMUM OF 10 FEET APART. BOND GROUND RODS TOGETHER WITH A LOOPED #2 COPPER CONDUCTOR.
31. (3)#6 & #8G, 1-1/2"C.
32. (4)#1/0 & #6G, 2"C
33. (4)#1/0 & #10G, 1"C.
34. PROVIDE AS 3M COLD SHRINK QT-III TERMINATION KIT. TYPICAL OF THREE (3). INSTALL ON THREE PHASE FIBERGLASS EQUIPMENT BRACKET PER MANUFACTURERS RECOMMENDATIONS. PROVIDE AND INSTALL ANIMAL GUARD ON COLD SHRINK TERMINATION KIT PER MANUFACTURERS RECOMMENDATIONS. REFER TO POLE DETAILS ON SHEET E-035 AND SPECIFICATIONS FOR ADDITIONAL INFORMATION/REQUIREMENTS.
35. FOUR (4) SETS OF [(4)#500 & #4/0G, 4"C]
36. TWO (2) SETS OF [(4)#4/0 & #2G, 4"C]
37. CONTRACTOR TO PROVIDE TWO (2) 3/4"Ø x 10' COPPER GROUND RODS. PROVIDE GROUNDING ELECTRODE FOR BUILDING SERVICE PER NEC. GROUND RODS TO BE PLACED AT MINIMUM OF 10 FEET APART. BOND GROUND RODS TOGETHER WITH A LOOPED #400 COPPER CONDUCTOR. REFER TO ELECTRICAL DETAILS FOR ADDITIONAL INFORMATION/REQUIREMENTS.
38. REFER TO ELECTRICAL DETAILS FOR ADDITIONAL INFORMATION/REQUIREMENTS.
39. PROVIDE BREAKER WITH ELECTRONIC LSI TRIP UNIT. COORDINATE PROTECTIVE DEVICE SETTINGS WITH COORDINATION STUDY. REFER TO SPECIFICATIONS FOR ADDITIONAL INFORMATION.
40. GROUND RING TO BE BURIED AT MINIMUM 3 FEET BELOW FINISHED GRADE. GROUND RING TO BE KEPT AT MINIMUM OF 3 FEET AWAY FROM EQUIPMENT AT ALL TIMES. PROVIDE AND INSTALL 3/4"Ø x 10' GROUND RODS AT EACH CORNER OF GROUND RING FOR A TOTAL OF FOUR (4) GROUND RODS. ALL GROUND CONDUCTORS SHALL BE #3/0 COPPER, U.O.N.
41. PROVIDE SPARE CONDUIT AS SHOWN. STUB CONDUIT ADJACENT TO SERVICE EQUIPMENT OR AS DIRECTED BY UTILITY/OWNER. PROVIDE PULL STRING AND CAP BOTH ENDS. LABEL BOTH ENDS OF SPARE CONDUIT INDICATING ORIGIN/DESTINATION.
42. SPARE 2" CONDUIT.
43. PROVIDE AND INSTALL TWO (2) 3/4"Ø x 10'-0" COPPER GROUND RODS. BOND ALL EQUIPMENT ON PRIMARY METERING RISER POLE AS SHOWN ON POLE DETAILS ON SHEET E-035 OR AS REQUIRED BY THE UTILITY. GROUND ROD TO BE BURIED AT MINIMUM 3 FEET BELOW FINISHED GRADE. GROUND RING TO BE KEPT AT MINIMUM OF 3 FEET AWAY FROM POLES AT ALL TIMES. ALL GROUND CONDUCTORS SHALL BE #1/0 COPPER, U.O.N.
44. (2)#14, 3/4"C. CIRCUIT TO BE UTILIZED TO SHUT DOWN THE PROPOSED VFD IN THE EVENT THE DISCONNECT IS OPENED (PREVENT DAMAGE TO THE PROPOSED VFD) AND REENGAGE THE VFD WHEN THE DISCONNECT IS CLOSED.
45. PROPOSED DISCONNECT SWITCH TO BE PROVIDED WITH 2 SETS OF AUXILIARY CONTACTS. REFER TO EQUIPMENT CONNECTION SCHEDULE FOR ADDITIONAL INFORMATION.
46. (3)#1/0 & #6G, 2"C, PROVIDE AS VFD SHIELDED CABLE. CONDUIT SIZE LISTED AS MINIMUM. PROVIDE LARGER DIAMETER AS REQUIRED PER MANUFACTURER. REFER TO SPECIFICATIONS FOR ADDITIONAL INFORMATION REGARDING VFD CABLE.
47. FACTORY CABLE BY EQUIPMENT MANUFACTURER. PROVIDE 2" CONDUIT WHERE EXPOSED TO PHYSICAL DAMAGE AND RECOMMENDED BY THE EQUIPMENT MANUFACTURER. CONDUIT SIZE IS LISTED AS MINIMUM, PROVIDE LARGER AS REQUIRED PER MANUFACTURER. COORDINATE FINAL INSTALLATION REQUIREMENTS WITH EQUIPMENT MANUFACTURER.
48. (4)#8 & #10G, 1"C.
49. (4)#6 & #10G, 1-1/2"C.
50. CONTRACTOR TO PROVIDE FOUR (4) DEVICE LOCAL CONTROL STATION. STATION TO INCLUDE START (MOMENTARY SWITCH), STOP (MOMENTARY SWITCH), HAND/OFF/AUTO (THREE (3) POSITION SELECTOR SWITCH) AND E-STOP (PUSH BUTTON). STATION TO BE RATED NEMA 4X (NON-METALLIC / FIBERGLASS). ENCLOSURE TO BE PROVIDED AS NEMA 4X (NON-METALLIC / FIBERGLASS). FOUR (4) DEVICE, AND SUPPORT TWO CONTACT BLOCK DEPTH. CONTRACTOR TO PROVIDE MOUNTING NUTS, LEGEND PLATES, OPERATORS, CONTACT BLOCKS, AND ENCLOSURE FOR A COMPLETE UL LISTED CONTROL STATION ASSEMBLY. PROVIDE AS KILLARK HKH SERIES OR APPROVED EQUAL. TYPICAL OF THREE (3) CONTROL STATIONS ONE (1) FOR EACH INFLUENT PUMP.
51. (3)#4/0 & #4G, 4"C

MHE ENGINEERING
33 Airport Center Drive, Suite 202
New Windsor, NY 12553
(845) 567-3100
111 Wheatfield Drive, Suite 1
Milford, PA 18337
(570) 296-2765

BID ADDENDUM

JADE STONE ENGINEERING

STATE OF NEW YORK · JEFFREY E. ROBINSON · 095896 · LICENSED PROFESSIONAL ENGINEER

HAZARDOUS MATERIAL NOTE:
THE SERVICES PROVIDED BY MHE, INCLUDING ALL WORK DEPICTED ON MHE PLANS, DO NOT INCLUDE SERVICES RELATED TO THE IDENTIFICATION, CONTROLS OR HANDLING OF HAZARDOUS MATERIALS, INCLUDING SUCH MATERIALS AS ASBESTOS AND LEAD PAINT. ALL TESTING, IDENTIFICATION, ABATEMENT, CONTROLS, AND HANDLING OF HAZARDOUS MATERIALS SHALL BE UNDERTAKEN BY A HAZARDOUS MATERIAL CONSULTANT AND CERTIFIED PROFESSIONALS. IF SUCH MATERIALS HAVE BEEN IDENTIFIED, CONTRACTOR WILL COMMUNICATE DIRECTLY WITH HAZARDOUS MATERIAL PROFESSIONAL FOR THE PERFORMANCE OF ANY WORK ON OR ADJACENT TO SAID MATERIALS. IF UNIDENTIFIED MATERIALS OF CONCERN ARE ENCOUNTERED WHILE UNDERTAKING THE WORK SHOWN HEREON, CONTRACTOR SHALL IMMEDIATELY NOTIFY ENGINEER AND OWNER, AND SHALL OBTAIN DIRECTION FROM THE HAZARDOUS MATERIAL CONSULTANT PRIOR TO THE CONTINUATION OF WORK INVOLVING SUSPECTED MATERIAL.

UDIG·NY SAFE DIGGING STARTS HERE
CALL 811

UNAUTHORIZED ADDITION OR ALTERATION OF THIS PLAN IS A VIOLATION OF SECTION 7209(2) OF THE NEW YORK STATE EDUCATION LAW.

ALL PRODUCTION & INTELLECTUAL PROPERTY RIGHT RESERVED ©

CAESARS LANE WWTP EXPANSION PROJECT: PHASE 2
145 CAESARS LN.
NEW WINDSOR, NY 12553
FOR TOWN OF NEW WINDSOR
555 UNION AVE.
NEW WINDSOR, NY 12553

ELECTRICAL NEW WORK SINGLE LINE DIAGRAMS

REVISIONS

NO.	DESCRIPTION	DATE

ISSUED DATE:	06 JUNE, 2025
DESIGN BY:	RRM
DRAWN BY:	CDJ
CHECKED BY:	MGR
REVIEWED BY:	JER
SHEET NO.	E-012
PROJECT # 18-732	PHASE #

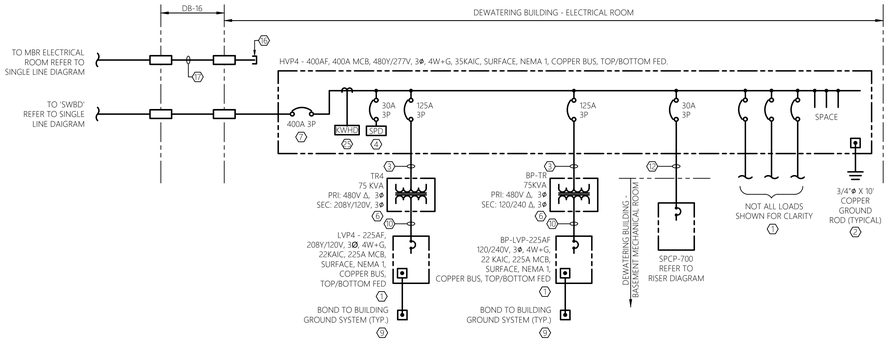

1 E-013 ELECTRICAL NEW WORK SINGLE LINE DIAGRAM
SCALE: NTS
DEWATERING BUILDING

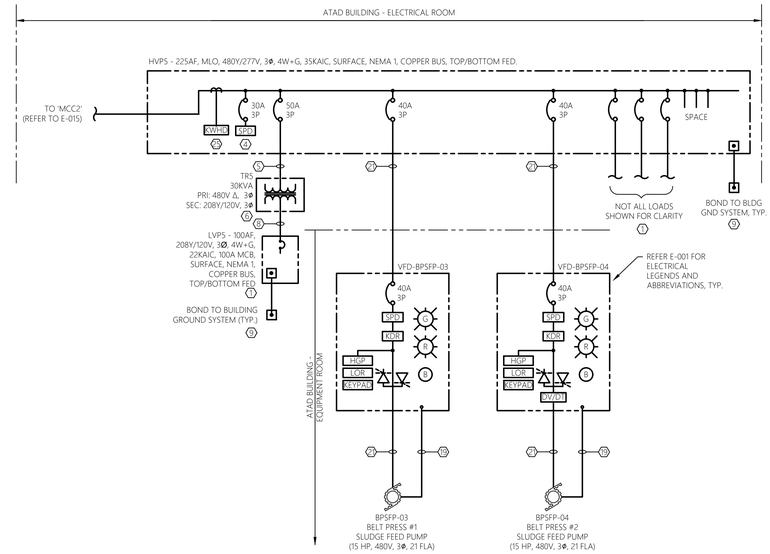

1 E-013 ELECTRICAL NEW WORK SINGLE LINE DIAGRAM
SCALE: NTS
ATAD BUILDING

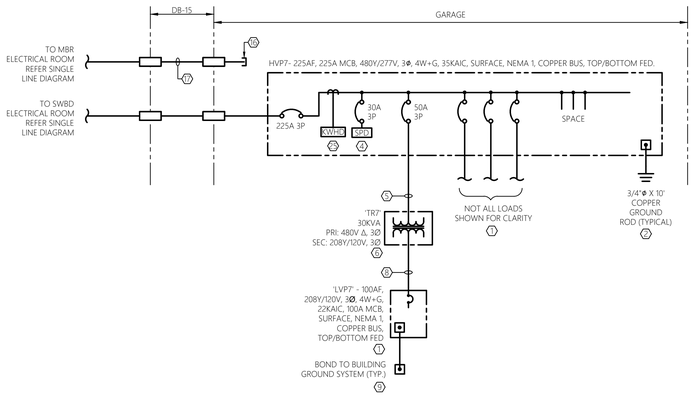

2 E-013 ELECTRICAL NEW WORK SINGLE LINE DIAGRAM
SCALE: NTS
GARAGE

GENERAL SHEET NOTES:

1. REFER TO E-001 FOR ELECTRICAL LEGENDS, ABBREVIATIONS AND GENERAL PROJECT NOTES.
2. NEW ELECTRICAL EQUIPMENT BASIS OF DESIGN - EATON
3. PROVIDE GROUNDING PER NEC FOR ALL ELECTRICAL EQUIPMENT AND ASSOCIATED EQUIPMENT.
4. ALL CONDUCTORS AND EQUIPMENT NOT SHOWN FOR CLARITY. COORDINATE WITH ALL PRIME CONTRACTORS AND PROVIDE COMPLETE ELECTRICAL CIRCUITING FOR ALL INSTALLED EQUIPMENT. ALL REQUIREMENTS TO BE PER NEC.
5. REFER TO CONTROL DIAGRAMS FOR ADDITIONAL INFORMATION/REQUIREMENTS.
6. REFER TO ELECTRICAL FLOOR PLAN DRAWINGS AND ELECTRICAL SITE PLAN FOR GENERAL LOCATIONS AND DUCT BANK INFORMATION.
7. REFER TO ELECTRICAL DETAIL SHEETS AND SCHEDULE SHEETS FOR ADDITIONAL INFORMATION/REQUIREMENTS.
8. CONTRACTOR TO PROVIDE ADDITIONAL LUG TERMINATION KITS OR PIN ADAPTORS WITHIN EQUIPMENT SHOWN/SPECIFIED AS NECESSARY TO TERMINATE THE NUMBER OF SETS OF CONDUCTORS AND SIZE SHOWN/SPECIFIED.
9. CIRCUITS SHOWN ARE POWER. REFER TO CONTROL RISER DIAGRAMS FOR INSTRUMENTATION AND CONTROL CIRCUITS. REFER TO SCHEDULES FOR ADDITIONAL CIRCUITS.
10. NOT ALL REQUIRED THRU-WALL AND THRU-FLOOR WATERTIGHT PENETRATIONS SHOWN FOR CLARITY. CONTRACTOR TO PROVIDE A THRU-WALL/FLOOR WATERTIGHT PENETRATION FOR ALL PENETRATIONS WITHIN BUILDING EXTERIOR WALLS AND FLOORS. REFER TO DETAIL SHEETS FOR ADDITIONAL INFORMATION.
11. CONTRACTOR SHALL INCLUDE A SHORT CIRCUIT, COORDINATION, AND ARC FLASH HAZARD ANALYSIS FOR THIS PROJECT. STUDY SHALL BE PERFORMED BY A NEW YORK STATE LICENSED PROFESSIONAL ENGINEER. SUBMIT SHORT CIRCUIT REPORT FINDINGS PRIOR TO SUBMITTAL DOCUMENTS ON ELECTRICAL GEAR & CONFIRM ALL PROPOSED AIC RATINGS. PROVIDE COORDINATION AND ARC FLASH HAZARD ANALYSIS FOR ALL ELECTRICAL EQUIPMENT. CONTRACTOR SHALL PROVIDE THE APPROPRIATE WARNING STICKERS ON ALL PANELBOARDS, CONTROL PANELS, AND EQUIPMENT DISCONNECTS. COORDINATION AND ARC FLASH HAZARD ANALYSIS TO BE IN ACCORDANCE WITH THE LATEST IEEE & NFPA 70E REQUIREMENTS. CONTRACTOR TO PROVIDE STUDY RESULTS IN REPORT FORMAT AND SUBMIT TO THE ENGINEER FOR REVIEW. REFER TO SPECIFICATIONS FOR ADDITIONAL INFORMATION.
12. CONTRACTOR TO COORDINATE OVERALL SEQUENCE OF CONSTRUCTION WITH THE OWNER AND ALL OTHER TRADE CONTRACTORS.
13. SERVICE EQUIPMENT TO BE LABELED WITH MAX AVAILABLE FAULT CURRENT PER NEC 110.24. CONTRACTOR TO PROVIDE A SHORT CIRCUIT ANALYSIS TO DETERMINE THE MAX AVAILABLE FAULT CURRENT. ANALYSIS TO BE PERFORMED BY A NEW YORK STATE LICENSED PROFESSIONAL ENGINEER. SUBMIT SHORT-CIRCUIT REPORT TO ENGINEER FOR APPROVAL DURING THE SUBMITTAL PHASE. REFER TO SPECIFICATIONS FOR ADDITIONAL INFORMATION.
14. REFER TO DUCT BANK SCHEDULE FOR ADDITIONAL SPARE CONDUIT REQUIREMENTS.
15. ALL CONDUCTORS TO BE COPPER AND CONTAIN THWN OR XHHW INSULATION (UNLESS OTHERWISE NOTED).

SHEET KEY NOTES:

1. NOT ALL LOADS SHOWN FOR CLARITY. REFER TO EQUIPMENT CONNECTION SCHEDULE, PANEL SCHEDULES, ELEVATIONS, AND SUPPLEMENTAL RISER DIAGRAMS FOR ADDITIONAL CIRCUITING INFORMATION/REQUIREMENTS.
2. CONTRACTOR TO PROVIDE TWO (2) 3/4"Ø x 10' COPPER GROUND RODS. PROVIDE GROUNDING ELECTRODE FOR BUILDING SERVICE PER NEC. GROUND RODS TO BE PLACED AT MINIMUM OF 10 FEET APART. BOND GROUND RODS TOGETHER WITH A LOOPED #3 COPPER CONDUCTOR.
3. (3)#1/0 & #6G, 2"C
4. PROVIDE SECONDARY SURGE PROTECTIVE DEVICE SUITABLE FOR INSTALLED SERVICE PER MANUFACTURERS RECOMMENDATIONS. AT MINIMUM DEVICE TO BE RATED FOR A SURGE CAPACITY RATING OF 160KA PER PHASE, BE A TYPE 2 DEVICE, 20KA NOMINAL DISCHARGE CURRENT, AND CONTAIN STANDARD PACKAGE OPTIONS/FEATURES. PROVIDE DEVICE INTERNAL TO MAIN SWITCHBOARD AND PROVIDE DISCONNECT AS REQUIRED. BOND TO BUILDING GROUND SYSTEM.
5. (3)#6 & #8G, 1-1/2"C.
6. REFER TO ELECTRICAL SCHEDULES FOR ADDITIONAL INFORMATION/REQUIREMENTS.
7. PROVIDE BREAKER WITH ELECTRONIC LSI TRIP UNIT. COORDINATE PROTECTIVE DEVICE SETTINGS WITH COORDINATION STUDY. REFER TO SPECIFICATIONS FOR ADDITIONAL INFORMATION.
8. (4)#1/0 & #6G, 2"C
9. CONTRACTOR TO BOND TO STRUCTURE GROUND SYSTEM. UTILIZE #4 COPPER GROUND CONDUCTOR UNLESS OTHERWISE NOTED. REFER TO ELECTRICAL DETAILS FOR ADDITIONAL INFORMATION/REQUIREMENTS.
10. (4)#4/0 & #4G, 2-1/2"C
11. (4)#14, 3/4"C. CIRCUIT TO BE UTILIZED TO SHUT DOWN THE PROPOSED VFD IN THE EVENT THE DISCONNECT IS OPENED (PREVENT DAMAGE TO THE PROPOSED VFD) AND REENGAGE THE VFD WHEN THE DISCONNECT IS CLOSED.
12. (4)#10 & #10G, 3/4"C.
13. PROPOSED DISCONNECT SWITCH TO BE PROVIDED WITH A SET OF AUXILIARY CONTACTS. REFER TO EQUIPMENT CONNECTION SCHEDULE FOR ADDITIONAL INFORMATION.
14. REFER TO ELECTRICAL DETAILS FOR ADDITIONAL INFORMATION/REQUIREMENTS.
15. FACTORY CABLE BY EQUIPMENT MANUFACTURER. PROVIDE 3/4" CONDUIT WHERE EXPOSED TO PHYSICAL DAMAGE AND RECOMMENDED BY THE EQUIPMENT MANUFACTURER. CONDUIT SIZE IS LISTED AS MINIMUM, PROVIDE LARGER AS REQUIRED PER MANUFACTURER. COORDINATE FINAL INSTALLATION REQUIREMENTS WITH EQUIPMENT MANUFACTURER.
16. PROVIDE SPARE CONDUIT AS SHOWN. STUB CONDUIT ADJACENT TO SERVICE EQUIPMENT OR AS DIRECTED BY UTILITY/OWNER. PROVIDE PULL STRING AND CAP BOTH ENDS. LABEL BOTH ENDS OF SPARE CONDUIT INDICATING ORIGIN/DESTINATION.
17. SPARE 4" CONDUIT.
18. (4)#14, 3/4"C.
19. (12)#14 & (4)#18STP, 1"C. CIRCUIT TO BE UTILIZED FOR THE ASSOCIATED MOTOR THERMAL SAFETY SWITCH. CIRCUIT TO CONTROL TERMINALS OF PROPOSED VFD. IN THE EVENT OF A MOTOR HIGH TEMPERATURE THE UNIT IS TO BE SHUT DOWN TO PREVENT DAMAGE TO UNIT. NOTE; SPARE CONDUCTORS TO BE UTILIZED FOR VARIOUS INPUT/OUTPUT FUNCTIONS.
20. (4)#4/0 & #4G, 4"C.
21. (3)#6 & #10G, 2"C. PROVIDE AS VFD SHIELDED CABLE. CONDUIT SIZE IS LISTED AS MINIMUM, PROVIDE LARGER DIAMETER AS REQUIRED PER MANUFACTURER. REFER TO SPECIFICATIONS FOR ADDITIONAL INFORMATION. ALL REQUIREMENTS TO BE PER NEC.
22. (12)#14 & (2)18STP, 1"C
23. (2)#10 & #10G, 1"C
24. (3)#1/0 & #6G, 3" C. PROVIDE AS VFD SHIELDED CABLE. CONDUIT SIZE LISTED AS MINIMUM. PROVIDE LARGER DIAMETER AS REQUIRED PER MANUFACTURER. REFER TO SPECIFICATIONS FOR ADDITIONAL INFORMATION REGARDING VFD CABLE.
25. PROVIDE CUSTOMER POWER METERING INTERNAL TO PANELBOARD. METER TO BE MODEL POWER XPERT METER 1000 SERIES AS MANUFACTURED BY EATON OR APPROVED EQUAL. PROVIDE METER WITH OPTIONAL COMMUNICATIONS EXPANSION CARD TO ENABLE ETHERNET CONNECTION TO SCADA FOR MONITORING. PROVIDE ALL REQUIRED INTERNAL PROTECTION AND CABLING AS REQUIRED.
26. CONTRACTOR TO UTILIZE SPARE CIRCUIT BREAKER WITHIN EXISTING PANEL TO SERVE PROPOSED EQUIPMENT AS SHOWN/INDICATED. UPDATE PANELBOARD'S CIRCUITRY DIRECTORY. TYPICAL OF ALL PROPOSED LOADS SERVED FROM EXISTING PANEL.

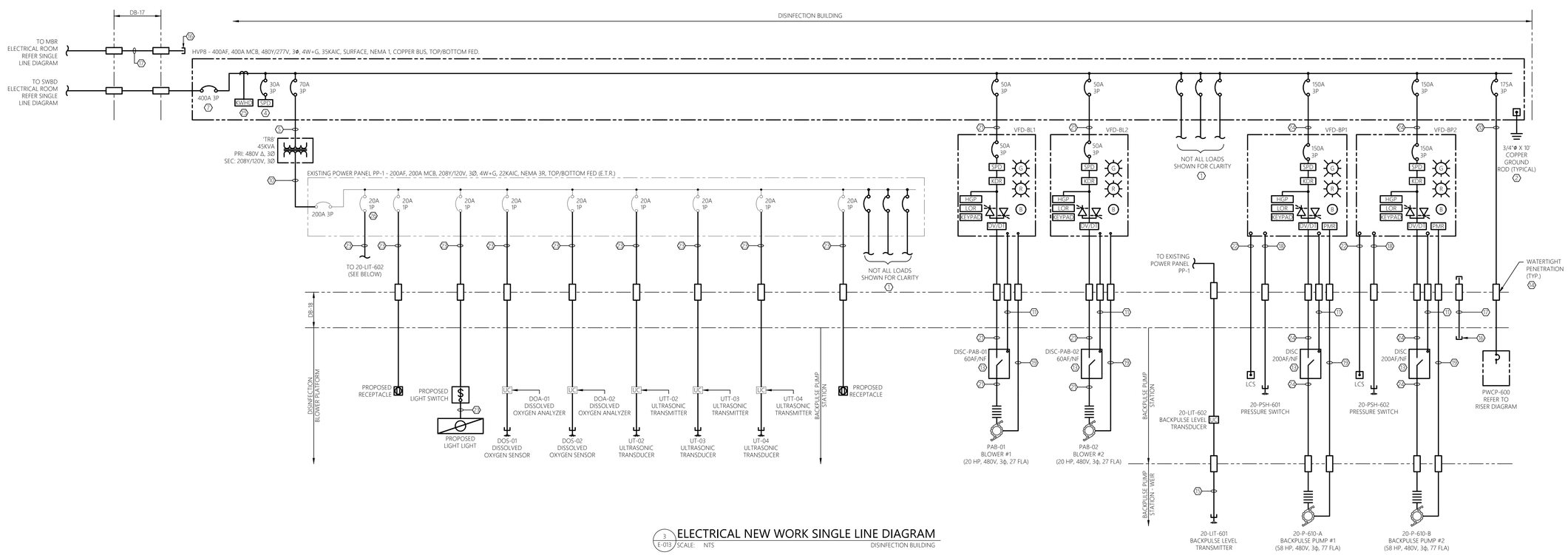

3 E-013 ELECTRICAL NEW WORK SINGLE LINE DIAGRAM
SCALE: NTS
DISINFECTION BUILDING

MHE ENGINEERING
33 Airport Center Drive, Suite 202
New Windsor, NY 12553
(845) 567-3100
111 Wheatfield Drive, Suite 1
Milford, PA 18337
(570) 296-2765

BID ADDENDUM

JADE STONE ENGINEERING

STATE OF NEW YORK · JEFFREY E. ROBINSON · 095896 · LICENSED PROFESSIONAL ENGINEER

HAZARDOUS MATERIAL NOTE:

THE SERVICES PROVIDED BY MHE, INCLUDING ALL WORK DEPICTED ON MHE PLANS, DO NOT INCLUDE SERVICES RELATED TO THE IDENTIFICATION, CONTROLS OR HANDLING OF HAZARDOUS MATERIALS, INCLUDING SUCH MATERIALS AS ASBESTOS AND LEAD PAINT. ALL TESTING, IDENTIFICATION, ABATEMENT, CONTROLS, AND HANDLING OF HAZARDOUS MATERIALS SHALL BE UNDERTAKEN BY A HAZARDOUS MATERIAL CONSULTANT AND CERTIFIED PROFESSIONALS. IF SUCH MATERIALS HAVE BEEN IDENTIFIED, CONTRACTOR WILL COMMUNICATE DIRECTLY WITH HAZARDOUS MATERIAL PROFESSIONAL FOR THE PERFORMANCE OF ANY WORK ON OR ADJACENT TO SAID MATERIALS. IF UNIDENTIFIED MATERIALS OF CONCERN ARE ENCOUNTERED WHILE UNDERTAKING THE WORK SHOWN HEREON, CONTRACTOR SHALL IMMEDIATELY NOTIFY ENGINEER AND OWNER, AND SHALL OBTAIN DIRECTION FROM THE HAZARDOUS MATERIAL CONSULTANT PRIOR TO THE CONTINUATION OF WORK INVOLVING SUSPECTED MATERIAL.

UDIG·NY SAFE DIGGING STARTS HERE
CALL 811

UNAUTHORIZED ADDITION OR ALTERATION OF THIS PLAN IS A VIOLATION OF SECTION 7209(2) OF THE NEW YORK STATE EDUCATION LAW.

ALL PRODUCTION & INTELLECTUAL PROPERTY RIGHT RESERVED ©

CAESARS LANE WWTP EXPANSION PROJECT: PHASE 2
145 CAESARS LN.
NEW WINDSOR, NY 12553
FOR TOWN OF NEW WINDSOR
555 UNION AVE.
NEW WINDSOR, NY 12553

ELECTRICAL NEW WORK SINGLE LINE DIAGRAMS

REVISIONS

NO.	DESCRIPTION	DATE

ISSUED DATE:	06 JUNE, 2025
DESIGN BY:	RRM
DRAWN BY:	CDJ
CHECKED BY:	MGR
REVIEWED BY:	JER

SHEET NO.
E-013

PROJECT # 18-732 PHASE #

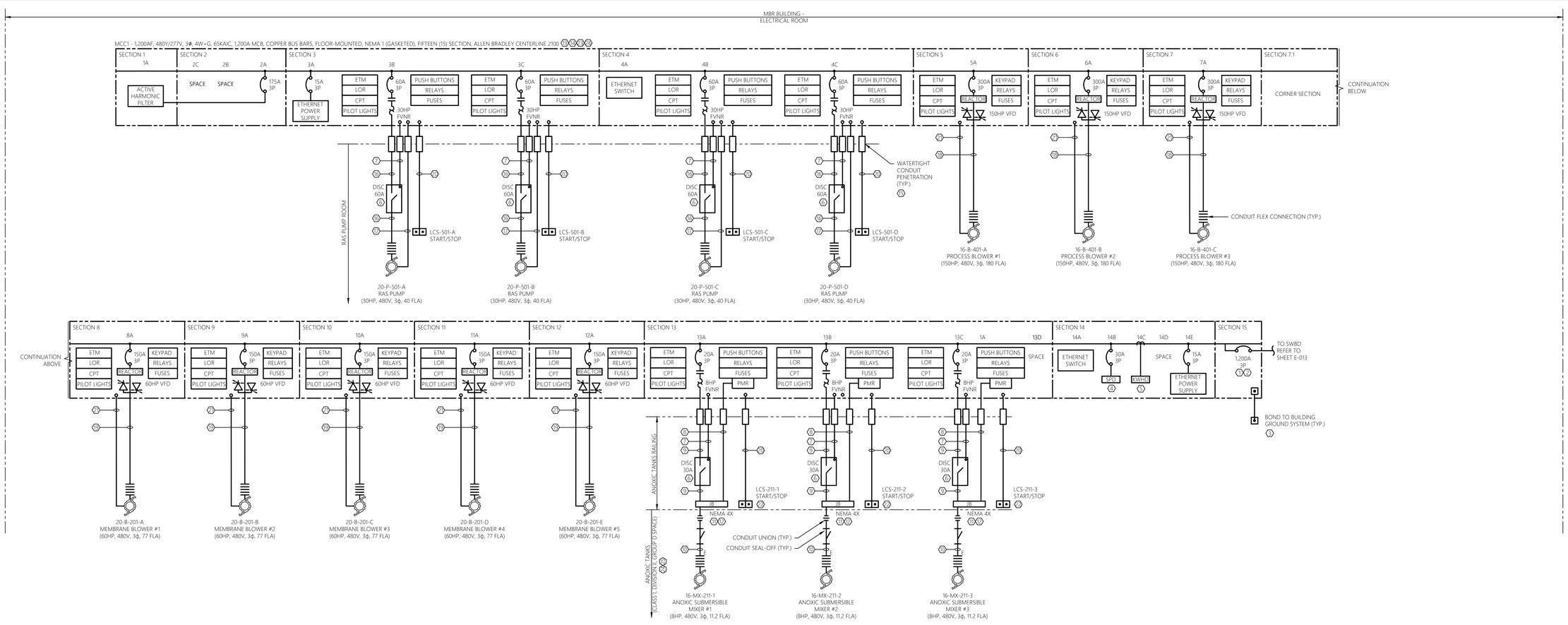

1 E-014 ELECTRICAL NEW WORK SINGLE LINE DIAGRAM
SCALE: NTS MCC1

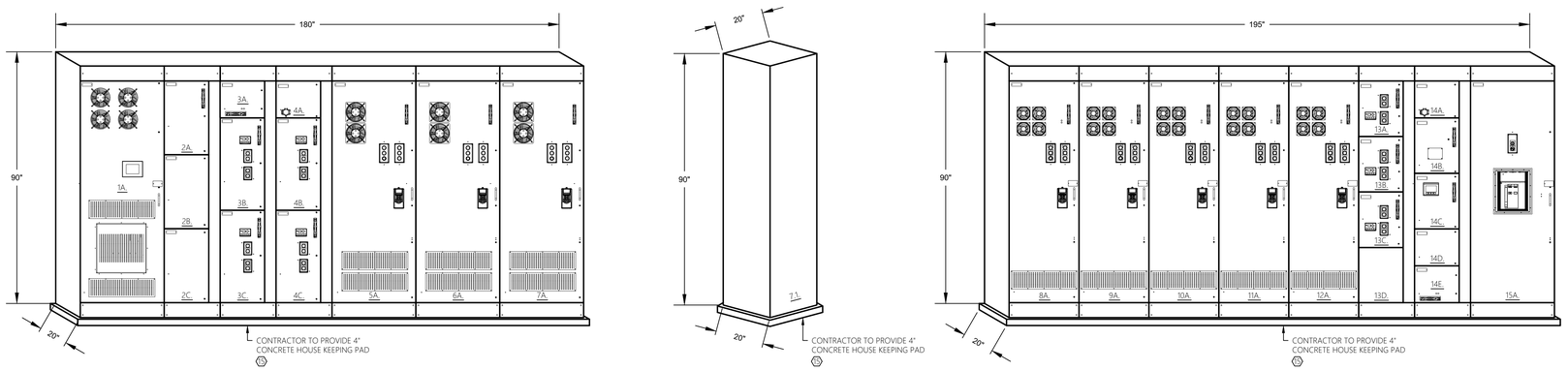

2 E-014 ELECTRICAL ELEVATION
SCALE: NTS MCC1

MCC1

1A - ACTIVE HARMONIC FILTER
2A - ACTIVE FILTER BREAKER
2B - SPACE
2C - SPACE
3A - ETHERNET POWER SUPPLY 2
3B - RAS PUMP FVNR 1
3C - RAS PUMP FVNR 2
4A - 20 PORT ETHERNET SWITCH 2
4B - RAS PUMP FVNR 3
4C - RAS PUMP FVNR 4
5A - PROCESS BLOWER VFD 1
6A - PROCESS BLOWER VFD 2
7A - PROCESS BLOWER VFD 3
7.1 - CORNER SECTION
8A - MEMBRANE BLOWER VFD 1
9A - MEMBRANE BLOWER VFD 2
10A - MEMBRANE BLOWER VFD 3
11A - MEMBRANE BLOWER VFD 4
12A - MEMBRANE BLOWER VFD 5
13A - ANOXIC PUMP FVNR 1
13B - ANOXIC PUMP FVNR 2
13C - ANOXIC PUMP FVNR 3
13D - SPACE
14A - 20 PORT ETHERNET SWITCH 1
14B - SURGE PROTECTIVE DEVICE
14C - POWER MONITOR
14D - SPACE
14E - ETHERNET POWER SUPPLY 1
15A - MAIN BREAKER 1200A

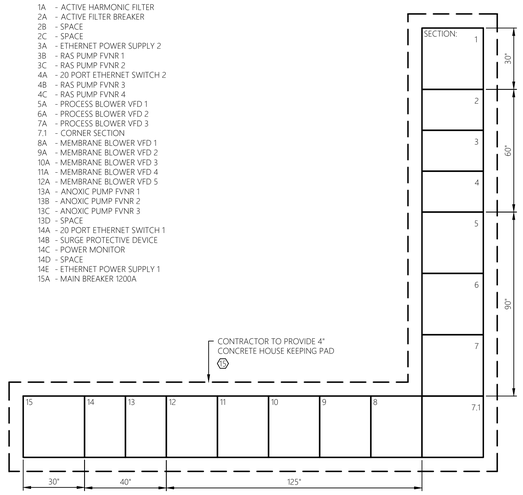

3 E-014 ELECTRICAL PAD LAYOUT
SCALE: NTS MCC1

GENERAL SHEET NOTES:

1. REFER TO E-001 FOR ELECTRICAL LEGENDS, ABBREVIATIONS AND GENERAL PROJECT NOTES.
2. NEW ELECTRICAL EQUIPMENT BASIS OF DESIGN - ALLEN BRADLEY
3. PROVIDE GROUNDING PER NEC FOR ALL ELECTRICAL EQUIPMENT AND ASSOCIATED EQUIPMENT.
4. ALL CONDUCTORS AND EQUIPMENT NOT SHOWN FOR CLARITY. COORDINATE WITH ALL PRIME CONTRACTORS AND PROVIDE COMPLETE ELECTRICAL CIRCUITING FOR ALL INSTALLED EQUIPMENT. ALL REQUIREMENTS TO BE PER NEC.
5. REFER TO CONTROL DIAGRAMS FOR ADDITIONAL INFORMATION/REQUIREMENTS.
6. REFER TO ELECTRICAL FLOOR PLAN DRAWINGS AND ELECTRICAL SITE PLAN FOR GENERAL LOCATIONS AND DUCT BANK INFORMATION.
7. REFER TO ELECTRICAL DETAIL SHEETS AND SCHEDULE SHEETS FOR ADDITIONAL INFORMATION/REQUIREMENTS.
8. CONTRACTOR TO PROVIDE ADDITIONAL LUG TERMINATION KITS OR PIN ADAPTORS WITHIN EQUIPMENT SHOWN/SPECIFIED AS NECESSARY TO TERMINATE THE NUMBER OF SETS OF CONDUCTORS AND SIZE SHOWN/SPECIFIED.
9. CIRCUITS SHOWN ARE POWER. REFER TO CONTROL RISER DIAGRAMS FOR INSTRUMENTATION AND CONTROL CIRCUITS. REFER TO SCHEDULES FOR ADDITIONAL CIRCUITS.
10. NOT ALL REQUIRED THRU-WALL AND THRU-FLOOR WATERTIGHT PENETRATIONS SHOWN FOR CLARITY. CONTRACTOR TO PROVIDE A THRU-WALL/FLOOR WATERTIGHT PENETRATION FOR ALL PENETRATIONS WITHIN BUILDING EXTERIOR WALLS AND FLOORS. REFER TO DETAIL SHEETS FOR ADDITIONAL INFORMATION.
11. CONTRACTOR SHALL INCLUDE A SHORT CIRCUIT, COORDINATION, AND ARC FLASH HAZARD ANALYSIS FOR THIS PROJECT. STUDY SHALL BE PERFORMED BY A NEW YORK STATE LICENSED PROFESSIONAL ENGINEER. SUBMIT SHORT CIRCUIT REPORT FINDINGS PRIOR TO SUBMITTAL DOCUMENTS ON ELECTRICAL GEAR & CONFIRM ALL PROPOSED AIC RATINGS. PROVIDE COORDINATION AND ARC FLASH HAZARD ANALYSIS FOR ALL ELECTRICAL EQUIPMENT. CONTRACTOR SHALL PROVIDE THE APPROPRIATE WARNING STICKERS ON ALL PANELBOARDS, CONTROL PANELS, AND EQUIPMENT DISCONNECTS. COORDINATION AND ARC FLASH HAZARD ANALYSIS TO BE IN ACCORDANCE WITH THE LATEST IEEE & NFPA 70E REQUIREMENTS. CONTRACTOR TO PROVIDE STUDY RESULTS IN REPORT FORMAT AND SUBMIT TO THE ENGINEER FOR REVIEW. REFER TO SPECIFICATIONS FOR ADDITIONAL INFORMATION.
12. CONTRACTOR TO COORDINATE OVERALL SEQUENCE OF CONSTRUCTION WITH THE OWNER AND ALL OTHER TRADE CONTRACTORS.
13. SERVICE EQUIPMENT TO BE LABELED WITH MAX AVAILABLE FAULT CURRENT PER NEC 110.24. CONTRACTOR TO PROVIDE A SHORT CIRCUIT ANALYSIS TO DETERMINE THE MAX AVAILABLE FAULT CURRENT. ANALYSIS TO BE PERFORMED BY A NEW YORK STATE LICENSED PROFESSIONAL ENGINEER. SUBMIT SHORT CIRCUIT REPORT TO ENGINEER FOR APPROVAL DURING THE SUBMITTAL PHASE. REFER TO SPECIFICATIONS FOR ADDITIONAL INFORMATION.
14. ALL CONDUCTORS TO BE COPPER AND CONTAIN THWN OR XHHW INSULATION (UNLESS OTHERWISE NOTED).

SHEET KEY NOTES:

1. CIRCUIT BREAKER TO BE PROVIDED WITH AN ELECTRONIC TRIP UNIT WITH LSI PROTECTION.
2. CIRCUIT BREAKER TO BE EQUIPPED WITH ARC FLASH REDUCTION MAINTENANCE SYSTEM. THIS FUNCTION IS TO BE ACTIVATED WITH A LOCAL SWITCH DIRECTLY ON THE CIRCUIT BREAKER. THIS FUNCTION IS REQUIRED TO COMPLY WITH NEC ARTICLE 240.87.
3. CONTRACTOR TO BOND TO BUILDING GROUND SYSTEM. UTILIZE #3/0 COPPER GROUND CONDUCTOR UNLESS OTHERWISE NOTED. REFER TO ELECTRICAL DETAILS FOR ADDITIONAL INFORMATION/REQUIREMENTS.
4. PROVIDE SECONDARY SURGE PROTECTIVE DEVICE SUITABLE FOR INSTALLED SERVICE PER MCC MANUFACTURERS RECOMMENDATIONS. AT MINIMUM DEVICE TO BE RATED FOR A SURGE CAPACITY RATING OF 200KA PER PHASE, BE A TYPE 1 DEVICE, 20KA NOMINAL DISCHARGE CURRENT, AND CONTAIN STANDARD PACKAGE OPTIONS/FEATURES. PROVIDE DEVICE INTERNAL TO MCC AND PROVIDE DISCONNECT AS REQUIRED. BOND TO BUILDING GROUND SYSTEM.
5. PROVIDE CUSTOMER POWER METERING INTERNAL TO MCC. METER TO BE MODEL POWER XPERT METER 2000 SERIES AS MANUFACTURED BY EATON OR APPROVED EQUAL. PROVIDE ALL REQUIRED OVERCURRENT PROTECTION AND CABLING AS REQUIRED.
6. PROPOSED DISCONNECT SWITCH TO BE PROVIDED WITH A SET OF AUXILIARY CONTACTS. REFER TO EQUIPMENT CONNECTION SCHEDULE FOR ADDITIONAL INFORMATION.
7. (4)#14, 3/4"C. CIRCUIT TO BE UTILIZED TO SHUT DOWN THE PROPOSED STARTER IN THE EVENT THE DISCONNECT IS OPENED AND PROVIDE STATUS OF OPEN DISCONNECT VIA PILOT LIGHT.
8. (6)#14, 3/4"C. CIRCUIT TO BE UTILIZED FOR THE ASSOCIATED MOTOR THERMAL SAFETY SWITCH AND SEAL FAILURE. CIRCUIT TO CONTROL TERMINALS OF PROPOSED STARTER. IN THE EVENT OF A MOTOR HIGH TEMPERATURE OR LEAKAGE, THE UNIT IS TO BE SHUT DOWN TO PREVENT DAMAGE. NOTE, TWO CONDUCTORS TO BE UTILIZED AS SPARES.
9. (3)#10 & #10G, 1"C.
10. FACTORY CABLE. THIS CONTRACT RESPONSIBLE FOR ALL TERMINATIONS PER MANUFACTURERS RECOMMENDATIONS. PROVIDE CONDUIT SYSTEM WHERE EXPOSED TO PHYSICAL DAMAGE AND RECOMMENDED BY THE EQUIPMENT MANUFACTURER. PROVIDE CONDUIT SIZE AS REQUIRED PER MANUFACTURER.
11. CONTRACTOR TO PROVIDE STAINLESS STEEL (NEMA 4X) JUNCTION BOX TO SERVE AS A PULL POINT TO EXTEND CIRCUITRY AS SHOWN. CONTRACTOR TO FIELD VERIFY AND COORDINATE CONDUIT ARRANGEMENT ENTERING/LEAVING PROPOSED JUNCTION BOX. CONTRACTOR TO ASSUME A 6'W X 8'L X 4'D (INSIDE DIMENSIONS) BOX IS REQUIRED FOR BIDDING PURPOSES. FINAL BOX SIZE TO COMPLY WITH NEC ARTICLE 314. JUNCTION BOX TO BE 'STB' SERIES AS MANUFACTURED BY EATON OR APPROVED EQUAL.
12. CONTRACTOR TO PROVIDE NECESSARY TERMINAL STRIPS AND SPLICE KITS WITHIN JUNCTION BOX TO EXTEND CIRCUITRY AS SHOWN.
13. MOTOR CONTROL CENTER (MCC) TO BE FRONT ACCESSIBLE AND PROVIDED WITHIN A NEMA 1 (GASKETED) ENCLOSURE. MCC ASSEMBLY TO BE RATED FOR A MINIMUM 65KAIC. IN ADDITION, MCC TO BE PROVIDED WITH INTEGRAL SURGE PROTECTION AND CUSTOMER METERING. REFER TO ELECTRICAL ELEVATION AND SPECIFICATIONS FOR ADDITIONAL INFORMATION/REQUIREMENTS. MCC TO BE MODEL CENTERLINE 2100 AS MANUFACTURED BY ALLEN-BRADLEY OR APPROVED EQUAL. CONTRACTOR TO PROVIDE 4" CONCRETE HOUSEKEEPING PAD AND ALL REQUIRED ANCHORING EQUIPMENT, MOUNTING HARDWARE, BRACKETS, ACCESSORIES, ETC...
14. NOT ALL LOADS SHOWN FOR CLARITY. REFER TO EQUIPMENT CONNECTION SCHEDULE, MCC SCHEDULE, ELEVATIONS, AND SUPPLEMENTAL WIRING DIAGRAMS FOR ADDITIONAL CIRCUITING INFORMATION/REQUIREMENTS.
15. REFER TO ELECTRICAL DETAILS FOR ADDITIONAL INFORMATION/REQUIREMENTS.
16. (3)#6 & #10G, 1-1/2"C
17. (4)#14, 3/4"C. CIRCUIT TO BE UTILIZED FOR THE ASSOCIATED MOTOR THERMAL SAFETY SWITCH. CIRCUIT TO CONTROL TERMINALS OF PROPOSED STARTER. IN THE EVENT OF A MOTOR HIGH TEMPERATURE, THE UNIT IS TO BE SHUT DOWN TO PREVENT DAMAGE. NOTE, TWO CONDUCTORS TO BE UTILIZED AS SPARES.
18. (3)#300 & #4G, 4"C. PROVIDE AS VFD SHIELDED CABLE. CONDUIT SIZE IS LISTED AS MINIMUM. PROVIDE LARGER DIAMETER AS REQUIRED PER MANUFACTURER. REFER TO SPECIFICATIONS FOR ADDITIONAL INFORMATION. ALL REQUIREMENTS TO BE PER NEC.
19. (3)#1/0 & #6G, 2"C. PROVIDE AS VFD SHIELDED CABLE. CONDUIT SIZE IS LISTED AS MINIMUM, PROVIDE LARGER DIAMETER AS REQUIRED PER MANUFACTURER. REFER TO SPECIFICATIONS FOR ADDITIONAL INFORMATION. ALL REQUIREMENTS TO BE PER NEC.
20. (12)#14, 3/4"C.
21. (16)#14 & (4)#18STP, 1"C. CIRCUIT TO BE UTILIZED FOR THE ASSOCIATED MOTOR THERMAL SAFETY SWITCH. CIRCUIT TO CONTROL TERMINALS OF PROPOSED VFD. IN THE EVENT OF A MOTOR HIGH TEMPERATURE THE UNIT IS TO BE SHUT DOWN TO PREVENT DAMAGE TO UNIT. NOTE, SPARE CONDUCTORS TO BE UTILIZED FOR VARIOUS INPUT/OUTPUT FUNCTIONS.
22. CONTRACTOR TO PROVIDE START/STOP PUSH BUTTON LOCAL CONTROL STATION WITHIN NEMA 4X ENCLOSURE.
23. CONTRACTOR TO PROVIDE ALL VFD WITHIN THE MCC AS HEAVY DUTY VARIABLE FREQUENCY AC DRIVE WITH CIRCUIT BREAKER. VFD TO BE MODEL POWERFLEX 750 SERIES AS MANUFACTURED BY ALLEN BRADLEY OR APPROVED EQUAL.
24. TANK INTERIOR IS A CLASS I DIVISION II GROUP D SPACE. THE CLASS I DIVISION II GROUP D SPACE EXTENDS TO ENVELOPE OF 18" SURROUNDING TANK. ALL WIRING METHODS WITHIN THIS SPACE TO COMPLY WITH NEC ARTICLE 501. ALL ELECTRICAL EQUIPMENT AND DEVICES WITHIN THIS SPACE TO BE EXPLOSION PROOF RATED FOR USE IN A CLASS I DIVISION II GROUP D ENVIRONMENT.
25. ALL ELECTRICAL EQUIPMENT, DEVICES, AND RACEWAY SYSTEMS TO BE KEPT OUT OF THE CLASSIFIED AREA AT ALL TIMES.
26. CONTRACTOR TO FOLLOW MANUFACTURER'S SPECIAL HANDLING REQUIREMENTS CLOSELY WHILE RIGGING EQUIPMENT THRU ACCESS DOORS. EQUIPMENT MANUFACTURER TO BE ON SITE WHILE EQUIPMENT IS MOVED THRU ACCESS DOORS AND RIGGED INTO FINAL INSTALL LOCATION. NOTE, MCC TO BE SHIPPED AS MULTIPLE SECTIONS. EACH SECTION TO BE RIGGED THRU ACCESS DOORS SEPARATELY PRIOR TO ASSEMBLING TOGETHER. CONTRACTOR TO FIELD VERIFY AND COORDINATE CLOSELY WITH THE EQUIPMENT MANUFACTURER.

MHE ENGINEERING
33 Airport Center Drive, Suite 202
New Windsor, NY 12553
(845) 567-3100
111 Wheatfield Drive, Suite 1
Milford, PA 18337
(570) 296-2765

BID ADDENDUM

JADE STONE ENGINEERING

STATE OF NEW YORK · JEFFREY E. ROBINSON · 095896 · LICENSED PROFESSIONAL ENGINEER

HAZARDOUS MATERIAL NOTE:
THE SERVICES PROVIDED BY MHE, INCLUDING ALL WORK DEPICTED ON MHE PLANS, DO NOT INCLUDE SERVICES RELATED TO THE IDENTIFICATION, CONTROLS OR HANDLING OF HAZARDOUS MATERIALS, INCLUDING SUCH MATERIALS AS ASBESTOS AND LEAD PAINT. ALL TESTING, IDENTIFICATION, ABATEMENT, CONTROLS, AND HANDLING OF HAZARDOUS MATERIALS SHALL BE UNDERTAKEN BY A HAZARDOUS MATERIAL CONSULTANT AND CERTIFIED PROFESSIONALS. IF SUCH MATERIALS HAVE BEEN IDENTIFIED, CONTRACTOR WILL COMMUNICATE DIRECTLY WITH HAZARDOUS MATERIAL PROFESSIONAL FOR THE PERFORMANCE OF ANY WORK ON OR ADJACENT TO SAID MATERIALS. IF UNIDENTIFIED MATERIALS OF CONCERN ARE ENCOUNTERED WHILE UNDERTAKING THE WORK SHOWN HEREON, CONTRACTOR SHALL IMMEDIATELY NOTIFY ENGINEER AND OWNER, AND SHALL OBTAIN DIRECTION FROM THE HAZARDOUS MATERIAL CONSULTANT PRIOR TO THE CONTINUATION OF WORK INVOLVING SUSPECTED MATERIAL.

UDIG·NY SAFE DIGGING STARTS HERE
CALL 811

UNAUTHORIZED ADDITION OR ALTERATION OF THIS PLAN IS A VIOLATION OF SECTION 7209(2) OF THE NEW YORK STATE EDUCATION LAW.

ALL PRODUCTION & INTELLECTUAL PROPERTY RIGHT RESERVED ©

CAESARS LANE WWTP EXPANSION PROJECT: PHASE 2
145 CAESARS LN.
NEW WINDSOR, NY 12553
FOR TOWN OF NEW WINDSOR
555 UNION AVE.
NEW WINDSOR, NY 12553

ELECTRICAL NEW WORK SINGLE LINE DIAGRAMS

REVISIONS

NO.	DESCRIPTION	DATE

ISSUED DATE:	06 JUNE, 2025
DESIGN BY:	RRM
DRAWN BY:	CDJ
CHECKED BY:	MGR
REVIEWED BY:	JER

SHEET NO.
E-014

PROJECT # 18-732 PHASE #

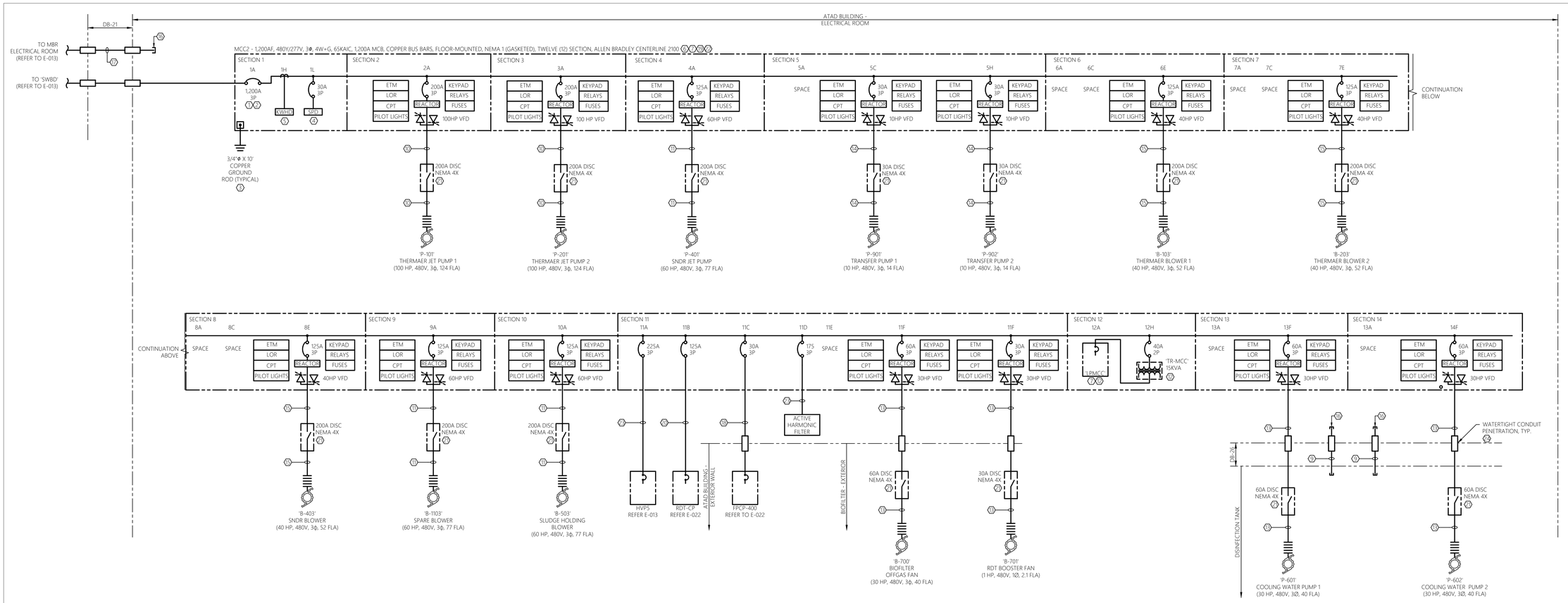

1 E-015 ELECTRICAL NEW WORK SINGLE LINE DIAGRAM
SCALE: NTS MCC2

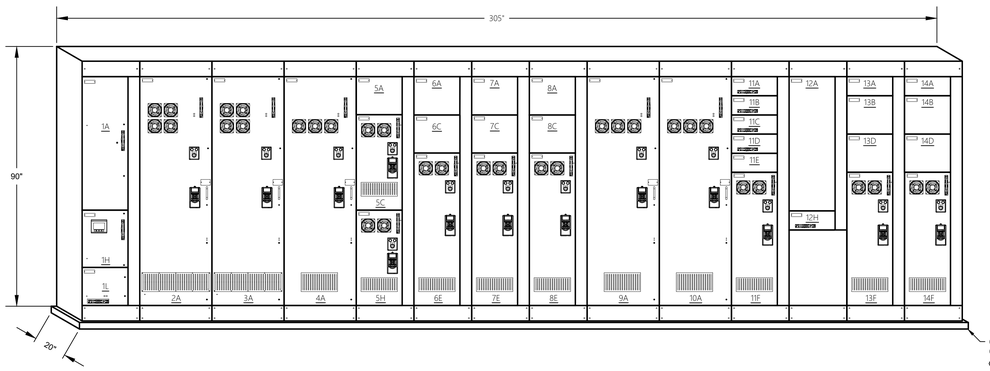

MCC1

1A - MAIN BREAKER 1,200A
1H - POWER MONITOR
1L - SURGE PROTECTIVE DEVICE
2A - THERMAER JET PUMP 1 VFD
3A - THERMAER JET PUMP 2 VFD
4A - SNDR JET PUMP VFD
5A - SPACE
5C - TRANSFER PUMP 1 VFD
5H - TRANSFER PUMP 2 VFD
6A - SPACE
6C - SPACE
6E - THERMAER BLOWER 1 VFD
7A - SPACE
7B - SPACE
7E - THERMAER BLOWER 2 VFD
8A - SPACE
8C - SPACE
8E - SNDR BLOWER VFD
9A - SPARE BLOWER VFD
10A - SLUDGE HOLDING BLOWER VFD
11A - 225A BREAKER HVP5
11B - 125A BREAKER RDT-CP
11C - 30A BREAKER RDTFP-CP
11D - 175A BREAKER ACTIVE HARMONIC FILTER
11E - SPACE
11F - BIOFILTER OFF GAS FAN VFD
12A - LPMCC
12B - TRMCC
13A - SPACE
13F - SUBMERSIBLE PUMP 1 VFD
14A - SPACE
14F - SUBMERSIBLE PUMP 2 VFD

2 E-015 ELECTRICAL ELEVATION
SCALE: NTS MCC2

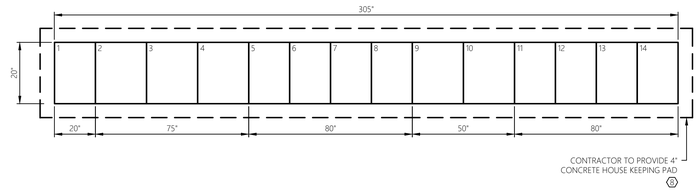

3 E-015 ELECTRICAL PAD LAYOUT
SCALE: NTS MCC2

GENERAL SHEET NOTES:

1. REFER TO E-001 FOR ELECTRICAL LEGENDS, ABBREVIATIONS AND GENERAL PROJECT NOTES.
2. NEW ELECTRICAL EQUIPMENT BASIS OF DESIGN - ALLEN BRADLEY
3. PROVIDE GROUNDING PER NEC FOR ALL ELECTRICAL EQUIPMENT AND ASSOCIATED EQUIPMENT.
4. ALL CONDUCTORS AND EQUIPMENT NOT SHOWN FOR CLARITY. COORDINATE WITH ALL PRIME CONTRACTORS AND PROVIDE COMPLETE ELECTRICAL CIRCUITING FOR ALL INSTALLED EQUIPMENT. ALL REQUIREMENTS TO BE PER NEC.
5. REFER TO CONTROL DIAGRAMS FOR ADDITIONAL INFORMATION/REQUIREMENTS.
6. REFER TO ELECTRICAL FLOOR PLAN DRAWINGS AND ELECTRICAL SITE PLAN FOR GENERAL LOCATIONS AND DUCT BANK INFORMATION.
7. REFER TO ELECTRICAL DETAIL SHEETS AND SCHEDULE SHEETS FOR ADDITIONAL INFORMATION/REQUIREMENTS.
8. CONTRACTOR TO PROVIDE ADDITIONAL LUG TERMINATION KITS OR PIN ADAPTORS WITHIN EQUIPMENT SHOWN/SPECIFIED AS NECESSARY TO TERMINATE THE NUMBER OF SETS OF CONDUCTORS AND SIZE SHOWN/SPECIFIED.
9. CIRCUITS SHOWN ARE POWER. REFER TO CONTROL RISER DIAGRAMS FOR INSTRUMENTATION AND CONTROL CIRCUITS. REFER TO SCHEDULES FOR ADDITIONAL CIRCUITS.
10. NOT ALL REQUIRED THRU-WALL AND THRU-FLOOR WATERTIGHT PENETRATIONS SHOWN FOR CLARITY. CONTRACTOR TO PROVIDE A THRU-WALL/FLOOR WATERTIGHT PENETRATION FOR ALL PENETRATIONS WITHIN BUILDING EXTERIOR WALLS AND FLOORS. REFER TO DETAIL SHEETS FOR ADDITIONAL INFORMATION.
11. CONTRACTOR SHALL INCLUDE A SHORT CIRCUIT, COORDINATION, AND ARC FLASH HAZARD ANALYSIS FOR THIS PROJECT. STUDY SHALL BE PERFORMED BY A NEW YORK STATE LICENSED PROFESSIONAL ENGINEER. SUBMIT SHORT CIRCUIT REPORT FINDINGS PRIOR TO SUBMITTAL DOCUMENTS ON ELECTRICAL GEAR & CONFIRM ALL PROPOSED AIC RATINGS. PROVIDE COORDINATION AND ARC FLASH HAZARD ANALYSIS FOR ALL ELECTRICAL EQUIPMENT. CONTRACTOR SHALL PROVIDE THE APPROPRIATE WARNING STICKERS ON ALL PANELBOARDS, CONTROL PANELS, AND EQUIPMENT DISCONNECTS. COORDINATION AND ARC FLASH HAZARD ANALYSIS TO BE IN ACCORDANCE WITH THE LATEST IEEE & NFPA 70E REQUIREMENTS. CONTRACTOR TO PROVIDE STUDY RESULTS IN REPORT FORMAT AND SUBMIT TO THE ENGINEER FOR REVIEW. REFER TO SPECIFICATIONS FOR ADDITIONAL INFORMATION.
12. CONTRACTOR TO COORDINATE OVERALL SEQUENCE OF CONSTRUCTION WITH THE OWNER AND ALL OTHER TRADE CONTRACTORS.
13. SERVICE EQUIPMENT TO BE LABELED WITH MAX AVAILABLE FAULT CURRENT PER NEC 110.24. CONTRACTOR TO PROVIDE A SHORT CIRCUIT ANALYSIS TO DETERMINE THE MAX AVAILABLE FAULT CURRENT. ANALYSIS TO BE PERFORMED BY A NEW YORK STATE LICENSED PROFESSIONAL ENGINEER. SUBMIT SHORT CIRCUIT REPORT TO ENGINEER FOR APPROVAL DURING THE SUBMITTAL PHASE. REFER TO SPECIFICATIONS FOR ADDITIONAL INFORMATION.
14. ALL CONDUCTORS TO BE COPPER AND CONTAIN THWN OR XHHW INSULATION (UNLESS OTHERWISE NOTED).

SHEET KEY NOTES:

1. CIRCUIT BREAKER TO BE PROVIDED WITH AN ELECTRONIC TRIP UNIT WITH LSI PROTECTION.
2. CIRCUIT BREAKER TO BE EQUIPPED WITH ARC FLASH REDUCTION MAINTENANCE SYSTEM. THIS FUNCTION IS TO BE ACTIVATED WITH A LOCAL SWITCH DIRECTLY ON THE CIRCUIT BREAKER. THIS FUNCTION IS REQUIRED TO COMPLY WITH NEC ARTICLE 240.87.
3. CONTRACTOR TO PROVIDE TWO (2) 3/4"Ø x 10' COPPER GROUND RODS. PROVIDE GROUNDING ELECTRODE FOR BUILDING SERVICE PER NEC. GROUND RODS TO BE PLACED AT MINIMUM OF 10 FEET APART. BOND GROUND RODS TOGETHER WITH A LOOPED #3/0 COPPER CONDUCTOR.
4. PROVIDE SECONDARY SURGE PROTECTIVE DEVICE SUITABLE FOR INSTALLED SERVICE PER MCC MANUFACTURERS RECOMMENDATIONS. AT MINIMUM DEVICE TO BE RATED FOR A SURGE CAPACITY RATING OF 200KA PER PHASE, BE A TYPE 1 DEVICE, 20KA NOMINAL DISCHARGE CURRENT, AND CONTAIN STANDARD PACKAGE OPTIONS/FEATURES. PROVIDE DEVICE INTERNAL TO MCC AND PROVIDE DISCONNECT AS REQUIRED. BOND TO BUILDING GROUND SYSTEM.
5. PROVIDE CUSTOMER POWER METERING INTERNAL TO MCC. METER TO BE MODEL POWER XPERT METER 2000 SERIES AS MANUFACTURED BY EATON OR APPROVED EQUAL. PROVIDE ALL REQUIRED OVERCURRENT PROTECTION AND CABLING AS REQUIRED.
6. MOTOR CONTROL CENTER (MCC) TO BE FRONT ACCESSIBLE AND PROVIDED WITHIN A NEMA 1 (GASKETED) ENCLOSURE. MCC ASSEMBLY TO BE RATED FOR A MINIMUM 65KAIC. IN ADDITION, MCC TO BE PROVIDED WITH INTEGRAL SURGE PROTECTION AND CUSTOMER METERING. REFER TO ELECTRICAL ELEVATION AND SPECIFICATIONS FOR ADDITIONAL INFORMATION/REQUIREMENTS. MCC TO BE MODEL CENTERLINE 2100 AS MANUFACTURED BY ALLEN-BRADLEY OR APPROVED EQUAL. CONTRACTOR TO PROVIDE 4" CONCRETE HOUSEKEEPING PAD AND ALL REQUIRED ANCHORING EQUIPMENT, MOUNTING HARDWARE, BRACKETS, ACCESSORIES, ETC...
7. NOT ALL LOADS SHOWN FOR CLARITY. REFER TO EQUIPMENT CONNECTION SCHEDULE, MCC SCHEDULE, ELEVATIONS, AND SUPPLEMENTAL WIRING DIAGRAMS FOR ADDITIONAL CIRCUITING INFORMATION/REQUIREMENTS.
8. REFER TO ELECTRICAL DETAILS FOR ADDITIONAL INFORMATION/REQUIREMENTS
9. SPARE 2" CONDUIT.
10. (3)#4/0 & #4G, 4"C. PROVIDE AS VFD SHIELDED CABLE. CONDUIT SIZE IS LISTED AS MINIMUM, PROVIDE LARGER DIAMETER AS REQUIRED PER MANUFACTURER. REFER TO SPECIFICATIONS FOR ADDITIONAL INFORMATION. ALL REQUIREMENTS TO BE PER NEC.
11. (3)#1/0 & #6G, 2"C. PROVIDE AS VFD SHIELDED CABLE. CONDUIT SIZE IS LISTED AS MINIMUM, PROVIDE LARGER DIAMETER AS REQUIRED PER MANUFACTURER. REFER TO SPECIFICATIONS FOR ADDITIONAL INFORMATION. ALL REQUIREMENTS TO BE PER NEC.
12. REFER TO ELECTRICAL SCHEDULES FOR ADDITIONAL INFORMATION/REQUIREMENTS.
13. (3)#6 & #10G, 2"C. PROVIDE AS VFD SHIELDED CABLE. CONDUIT SIZE IS LISTED AS MINIMUM, PROVIDE LARGER DIAMETER AS REQUIRED PER MANUFACTURER. REFER TO SPECIFICATIONS FOR ADDITIONAL INFORMATION. ALL REQUIREMENTS TO BE PER NEC.
14. (3)#10 & #10G, 1"C. PROVIDE AS VFD SHIELDED CABLE. CONDUIT SIZE IS LISTED AS MINIMUM, PROVIDE LARGER DIAMETER AS REQUIRED PER MANUFACTURER. REFER TO SPECIFICATIONS FOR ADDITIONAL INFORMATION. ALL REQUIREMENTS TO BE PER NEC.
15. (3)#4 & #10G, 2"C. PROVIDE AS VFD SHIELDED CABLE. CONDUIT SIZE IS LISTED AS MINIMUM, PROVIDE LARGER DIAMETER AS REQUIRED PER MANUFACTURER. REFER TO SPECIFICATIONS FOR ADDITIONAL INFORMATION. ALL REQUIREMENTS TO BE PER NEC.
16. PROVIDE SPARE CONDUIT AS SHOWN. STUB CONDUIT ADJACENT TO SERVICE EQUIPMENT OR AS DIRECTED BY UTILITY/OWNER. PROVIDE PULL STRING AND CAP BOTH ENDS. LABEL BOTH ENDS OF SPARE CONDUIT INDICATING ORIGIN/DESTINATION.
17. SPARE 4" CONDUIT.
18. (3)#10 & #10G, 1"C
19. CONTRACTOR TO PROVIDE ALL VFD WITHIN THE MCC AS HEAVY DUTY VARIABLE FREQUENCY AC DRIVE WITH CIRCUIT BREAKER. VFD TO BE MODEL POWERFLEX 750 SERIES AS MANUFACTURED BY ALLEN BRADLEY OR APPROVED EQUAL.
20. (3)#1/0 & #6G, 2"C.
21. PROPOSED EQUIPMENT DISCONNECT TO BE PROVIDED WITH A SET OF AUXILIARY CONTACTS. REFER TO EQUIPMENT CONNECTION SCHEDULE AND RISER DIAGRAMS FOR ADDITIONAL INFORMATION/REQUIREMENTS.
22. CONTRACTOR TO FOLLOW MANUFACTURER'S SPECIAL HANDLING REQUIREMENTS CLOSELY WHILE RIGGING EQUIPMENT THRU ACCESS DOORS. EQUIPMENT MANUFACTURER TO BE ON SITE WHILE EQUIPMENT IS MOVED THRU ACCESS DOORS AND RIGGED INTO FINAL INSTALL LOCATION. NOTE, MCC TO BE SHIPPED AS MULTIPLE SECTIONS. EACH SECTION TO BE RIGGED THRU ACCESS DOORS SEPARATELY PRIOR TO ASSEMBLING TOGETHER. CONTRACTOR TO FIELD VERIFY AND COORDINATE CLOSELY WITH THE EQUIPMENT MANUFACTURER.
23. (3)#4/0 & #4G, 2-1/2"C.
24. REFER TO ELECTRICAL DETAILS FOR ADDITIONAL INFORMATION/REQUIREMENTS.

MHE ENGINEERING
33 Airport Center Drive, Suite 202
New Windsor, NY 12553
(845) 567-3100
111 Wheatfield Drive, Suite 1
Milford, PA 18337
(570) 296-2765

BID ADDENDUM

JADE STONE ENGINEERING

STATE OF NEW YORK · JEFFREY E. ROBINSON · 095896 · LICENSED PROFESSIONAL ENGINEER

HAZARDOUS MATERIAL NOTE:
THE SERVICES PROVIDED BY MHE, INCLUDING ALL WORK DEPICTED ON MHE PLANS, DO NOT INCLUDE SERVICES RELATED TO THE IDENTIFICATION, CONTROLS OR HANDLING OF HAZARDOUS MATERIALS, INCLUDING SUCH MATERIALS AS ASBESTOS AND LEAD PAINT. ALL TESTING, IDENTIFICATION, ABATEMENT, CONTROLS, AND HANDLING OF HAZARDOUS MATERIALS SHALL BE UNDERTAKEN BY A HAZARDOUS MATERIAL CONSULTANT AND CERTIFIED PROFESSIONALS. IF SUCH MATERIALS HAVE BEEN IDENTIFIED, CONTRACTOR WILL COMMUNICATE DIRECTLY WITH HAZARDOUS MATERIAL PROFESSIONAL FOR THE PERFORMANCE OF ANY WORK ON OR ADJACENT TO SAID MATERIALS. IF UNIDENTIFIED MATERIALS OF CONCERN ARE ENCOUNTERED WHILE UNDERTAKING THE WORK SHOWN HEREON, CONTRACTOR SHALL IMMEDIATELY NOTIFY ENGINEER AND OWNER, AND SHALL OBTAIN DIRECTION FROM THE HAZARDOUS MATERIAL CONSULTANT PRIOR TO THE CONTINUATION OF WORK INVOLVING SUSPECTED MATERIAL.

UDIG·NY SAFE DIGGING STARTS HERE
CALL 811

UNAUTHORIZED ADDITION OR ALTERATION OF THIS PLAN IS A VIOLATION OF SECTION 7209(2) OF THE NEW YORK STATE EDUCATION LAW.

ALL PRODUCTION & INTELLECTUAL PROPERTY RIGHT RESERVED ©

CAESARS LANE WWTP EXPANSION PROJECT: PHASE 2
145 CAESARS LN.
NEW WINDSOR, NY 12553
FOR TOWN OF NEW WINDSOR
555 UNION AVE.
NEW WINDSOR, NY 12553

ELECTRICAL NEW WORK SINGLE LINE DIAGRAMS

REVISIONS

NO.	DESCRIPTION	DATE

ISSUED DATE:	06 JUNE, 2025
DESIGN BY:	RRM
DRAWN BY:	CDJ
CHECKED BY:	MGR
REVIEWED BY:	JER
SHEET NO.	E-015
PROJECT # 18-732	PHASE #

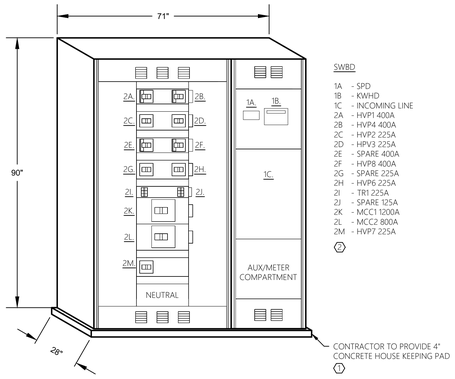

SWBD

1A - SPD
1B - KWHD
1C - INCOMING LINE
2A - HVP1 400A
2B - HVP4 400A
2C - HVP2 225A
2D - HPV3 225A
2E - SPARE 400A
2F - HVP8 400A
2G - SPARE 225A
2H - HVP6 225A
2I - TR1 225A
2J - SPARE 125A
2K - MCC1 1200A
2L - MCC2 800A
2M - HVP7 225A
2

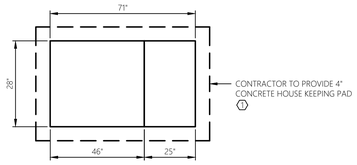

1 E-016 ELECTRICAL ELEVATION AND PAD LAYOUT
SCALE: NTS — SWITCHBOARD

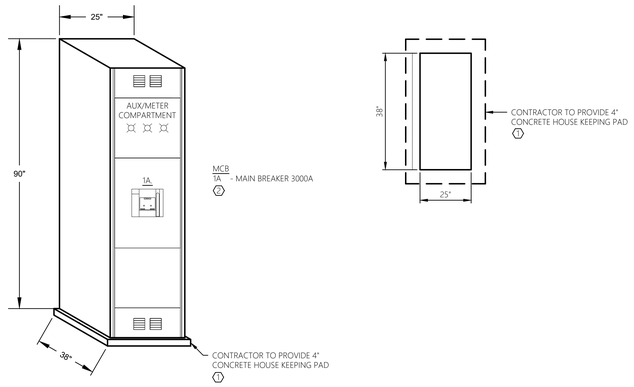

2 E-016 ELECTRICAL ELEVATION AND PAD LAYOUT
SCALE: NTS — MAIN SERVICE DISCONNECT

GENERAL SHEET NOTES:

1. REFER TO ELECTRICAL PLANS FOR GENERAL LOCATIONS.
2. NEW ELECTRICAL EQUIPMENT BASIS OF DESIGN - ALLEN BRADLEY (MCC), SIEMENS (SWITCHBOARD)
3. REFER TO E-001 FOR ELECTRICAL LEGENDS, ABBREVIATIONS AND GENERAL PROJECT NOTES.
4. PROVIDE GROUNDING PER NEC FOR ALL ELECTRICAL EQUIPMENT AND ASSOCIATED EQUIPMENT.
5. REFER TO ELECTRICAL SCHEDULES AND DETAILS FOR ADDITIONAL INFORMATION/REQUIREMENTS.
6. REFER TO ELECTRICAL RISER DIAGRAMS, SPECIFICATIONS, AND SUBMITTAL DOCUMENTATION FOR ADDITIONAL INFORMATION/REQUIREMENTS.
7. ALL CONDUCTORS, EQUIPMENT, COMPONENTS, AND DEVICES NOT SHOWN FOR CLARITY. COORDINATE WITH ALL TRADES AND PROVIDE COMPLETE ELECTRICAL CIRCUITING FOR ALL INSTALLED EQUIPMENT. ALL REQUIREMENTS TO BE PER NEC.
8. CONTRACTOR TO PROVIDE ADDITIONAL LUG TERMINATION KITS AS NECESSARY TO TERMINATE THE NUMBER OF SETS OF CONDUCTORS AND SIZE SHOWN/SPECIFIED. CIRCUITS SHOWN ARE POWER, CONTROL, AND CONTROL CIRCUIT POWER. REFER TO ELECTRICAL RISER DIAGRAMS AND ELEMENTARY WIRING DIAGRAMS FOR ADDITIONAL INSTRUMENTATION AND CONTROL CIRCUITS.
9. CONTRACTOR TO PROVIDE ADDITIONAL LUG TERMINATION KITS AS NECESSARY TO TERMINATE THE NUMBER OF SETS OF CONDUCTORS AND SIZE SHOWN/SPECIFIED. CIRCUITS SHOWN ARE POWER, CONTROL, AND CONTROL CIRCUIT POWER. REFER TO ELECTRICAL RISER DIAGRAMS AND ELEMENTARY WIRING DIAGRAMS FOR ADDITIONAL INSTRUMENTATION AND CONTROL CIRCUITS.
10. CONTRACTOR TO COORDINATE MOUNTING LOCATIONS OF ALL PANELS PROVIDED BY OTHERS WITH OWNER, ENGINEER, AND APPLICABLE TRADE CONTRACTOR. PROVIDE ALL NECESSARY MOUNTING HARDWARE, BRACKETS, ACCESSORIES, ETC., TO INSTALL PANELS & CONTROLLERS FURNISHED BY OTHERS.
11. NOT ALL REQUIRED THRU-WALL, WATERTIGHT, CONDUIT PENETRATIONS SHOWN FOR CLARITY. CONTRACTOR TO PROVIDE A THRU-WALL, WATERTIGHT, CONDUIT PENETRATION FOR ALL CONDUIT PENETRATIONS WITHIN BUILDING EXTERIOR WALLS. REFER TO ELECTRICAL DETAILS FOR ADDITIONAL INFORMATION.
12. ELEVATIONS SHOWN ARE GENERAL IN NATURE AND ARE INTENDED TO PROVIDE GENERAL DESIGN OVERVIEW AND INTENT. REFER TO SUBMITTAL DOCUMENTATION FOR ACTUAL LAYOUT AND FOR ADDITIONAL INFORMATION/REQUIREMENTS.
13. CONTRACTOR TO PROVIDE ARC FLASH WARNING LABELS FOR ALL NEW OR MODIFIED ELECTRICAL EQUIPMENT. REFER TO SPECIFICATIONS (POWER SYSTEM ANALYSIS) FOR REQUIREMENTS.
14. CONTRACTOR TO COORDINATE OVERALL SEQUENCE OF CONSTRUCTION WITH THE OWNER, ENGINEER, AND ALL TRADE CONTRACTORS.
15. CONTRACTOR TO COORDINATE ALL CONDUIT PENETRATIONS AND CONDUIT ROUTING WITH ALL TRADE CONTRACTORS, OWNER, AND ENGINEER PRIOR TO ROUGH-IN.
16. ALL WIRING REQUIREMENTS INCLUDING BUT NOT LIMITED TO WIRE SIZE, TYPE, AND QUANTITY OF CONDUCTORS TO BE VERIFIED WITH EQUIPMENT MANUFACTURER.
17. QUANTITY OF CONDUCTORS CALLED FOR MAY INCLUDE SPARE CONDUCTORS. PROVIDE CONDUCTORS SHOWN OR MINIMUM NUMBER REQUIRED PER MANUFACTURERS WRITTEN INSTRUCTIONS. ALL REQUIREMENTS TO BE PER NEC.
18. PROVIDE INTRINSICALLY SAFE BARRIERS AS REQUIRED. ALL REQUIREMENTS TO BE PER NEC.
19. NOT ALL REQUIRED CLASSIFIED SPACE WIRING METHODS INCLUDING, BUT NOT LIMITED TO SEAL-OFFS MAY BE SHOWN. PROVIDE WIRING METHODS PER NEC (LATEST EDITION). PROVIDE CONDUIT UNION WITHIN 6" OF EACH SEAL-OFF AT CONTROL PANELS, DISTRIBUTION PANELS, VFDS, STARTERS, DISCONNECTS, OR SOURCE OF SUPPLY WHERE FEASIBLE.
20. ALL CONDUCTORS TO BE COPPER AND CONTAIN THWN OR XHHW INSULATION.

SHEET KEY NOTES:

1. REFER TO ELECTRICAL DETAILS FOR ADDITIONAL INFORMATION/REQUIREMENTS.
2. CONTRACTOR TO FOLLOW MANUFACTURER'S SPECIAL HANDLING REQUIREMENTS CLOSELY WHILE RIGGING EQUIPMENT THRU ACCESS DOORS. EQUIPMENT MANUFACTURER TO BE ON SITE WHILE EQUIPMENT IS MOVED THRU ACCESS DOORS AND RIGGED INTO FINAL INSTALL LOCATION. NOTE, EQUIPMENT MAY BE SHIPPED AS MULTIPLE SECTIONS. EACH SECTION TO BE RIGGED THRU ACCESS DOORS SEPARATELY PRIOR TO ASSEMBLING TOGETHER. CONTRACTOR TO FIELD VERIFY AND COORDINATE CLOSELY WITH THE EQUIPMENT MANUFACTURER.

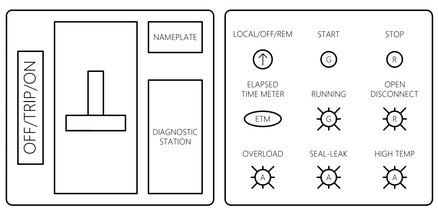

3 E-016 TYPICAL DOOR ASSEMBLY
SCALE: NTS — ANOXIC MIXERS

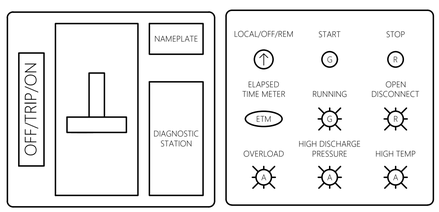

4 E-016 TYPICAL DOOR ASSEMBLY
SCALE: NTS — RAS PUMPS

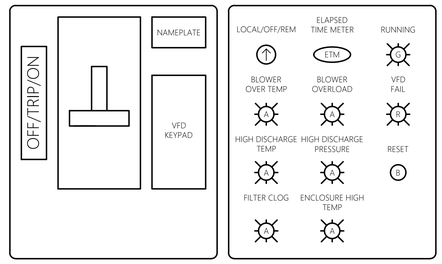

5 E-016 TYPICAL DOOR ASSEMBLY
SCALE: NTS — BLOWERS

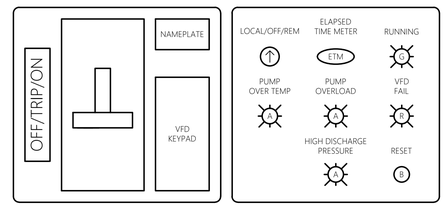

6 E-016 TYPICAL DOOR ASSEMBLY
SCALE: NTS — ATAD SYSTEM PUMPS

MCC SCHEDULE

DESIGNATION	ELECTRICAL CHARACTERISTICS	LOCATION	MAIN BUS (HORIZONTAL)	VERTICAL BUS	MAIN BREAKER	INCOMING POWER	MIN. INTERRUPTING RATING - SYM	NEMA ENCLOSURE	BASIS OF DESIGN	COMMUNICATIONS / I/O	REMARKS
MCC1	480Y/277V, 3Φ, 4W	MBR BUILDING (ELECTRICAL ROOM)	1,200A	600A (MINIMUM)	1,200 AMP FRAME 1,200 AMP ELECTRONIC TRIP UNIT WITH LSI	BOTTOM LEFT	65KAIC	1 (GASKETED)	ALLEN BRADLEY (CENTERLINE 2100)	HARDWIRED	
MCC2	480Y/277V, 3Φ, 4W	ATAD BUILDING (EQUIPMENT ROOM)	800A	600A (MINIMUM)	1,200 AMP FRAME 1,200 AMP ELECTRONIC TRIP UNIT WITH LSI	BOTTOM LEFT	65KAIC	1 (GASKETED)	ALLEN BRADLEY (CENTERLINE 2100)	HARDWIRED	

GENERAL SCHEDULE NOTES:

1. PROVIDE 4" CONCRETE HOUSE KEEPING PAD AND ALL REQUIRED ANCHORING EQUIPMENT, MOUNTING HARDWARE, BRACKETS, ACCESSORIES, ETC., REFER TO ELECTRICAL DETAILS FOR ADDITIONAL INFORMATION/REQUIREMENTS.
2. CIRCUIT BREAKER AND MOTOR HORSEPOWER RATINGS SHOWN ON THE ELECTRICAL SINGLE LINE DIAGRAM AND EQUIPMENT CONNECTION SCHEDULE ARE TO BE VERIFIED AND COORDINATED WITH THE PROPOSED EQUIPMENT. COORDINATE CLOSELY WITH OWNER, ENGINEER, AND APPLICABLE TRADE CONTRACTOR PRIOR TO RELEASE OF ORDER.
3. ELEVATIONS SHOWN ARE GENERAL IN NATURE. COORDINATE FINAL CONFIGURATION, ORIENTATION, LAYOUT, ETC., AND CONDUIT ENTRY POINTS WITH THE EQUIPMENT MANUFACTURER PRIOR TO RELEASE OF ORDER. EQUIPMENT IS TO BE CONFIGURED TO ACCOMMODATE PROPOSED INSTALLATION LOCATION AS SHOWN ON THE ELECTRICAL FLOOR PLAN SHEETS. MCC IS TO BE CONFIGURED FOR TOP AND BOTTOM CONDUIT ENTRY WITH THE MAIN BREAKER LOCATED IN THE BOTTOM LEFT WITH ALL SUBSEQUENT SECTIONS TO THE RIGHT (WHILE LOOKING AT THE MCC FRONT). MCC TO BE SET UP FOR BACK TO BACK CONFIGURATION AS SHOWN.
4. PROVIDE INTERNAL POWER METERING AND SURGE PROTECTION WITHIN MCC AS SPECIFIED ON THE ASSOCIATED SINGLE LINE DIAGRAM.
5. MCC TO FOLLOW NEMA CLASS II STANDARDS AND TYPE B-T WIRING STANDARDS.
6. MCC TO BE PROVIDED WITH PRE-DEFINED SPACE AS INDICATED WITHIN ELEVATION VIEW.
7. COORDINATE DELIVERY, STORAGE, AND HANDLING IN FIELD AND INSTALL PER MANUFACTURER'S INSTRUCTIONS AND RECOMMENDATIONS. MAINTAIN ALL REQUIRED NEC CLEARANCES. COORDINATE ALL WORK WITH OTHER TRADES PRIOR TO ROUGH-IN TO AVOID ANY POTENTIAL OBSTRUCTIONS, OR CONFLICTS AND REPORT ANY ISSUES, OR DISCREPANCIES TO ENGINEER PRIOR TO PROCEEDING WITH WORK.
8. PROVIDE IDENTIFICATION NAMEPLATES AND LABELS PER ELECTRICAL SPECIFICATIONS.
9. REFER TO ELECTRICAL SPECIFICATIONS FOR INSPECTION, TESTING, START-UP, TRAINING, WARRANTY, AND ADDITIONAL INFORMATION/REQUIREMENTS.
10. CONTRACTOR RESPONSIBLE FOR INSTALLING ARC FLASH WARNING LABELS AND ADJUSTING OVER-CURRENT PROTECTIVE DEVICE SETTINGS PER POWER SYSTEM ANALYSIS.
11. PROVIDE ADDITIONAL LUG TERMINATION KITS AS NECESSARY TO TERMINATE THE NUMBER OF SETS OF CONDUCTORS AND SIZE SHOWN/SPECIFIED.

MHE ENGINEERING
33 Airport Center Drive, Suite 202
New Windsor, NY 12553
(845) 567-3100
111 Wheatfield Drive, Suite 1
Milford, PA 18337
(570) 296-2765

BID ADDENDUM

JADE STONE ENGINEERING

STATE OF NEW YORK — JEFFREY E ROBINSON — 095896 — LICENSED PROFESSIONAL ENGINEER

HAZARDOUS MATERIAL NOTE:
THE SERVICES PROVIDED BY MHE, INCLUDING ALL WORK DEPICTED ON MHE PLANS, DO NOT INCLUDE SERVICES RELATED TO THE IDENTIFICATION, CONTROLS OR HANDLING OF HAZARDOUS MATERIALS, INCLUDING SUCH MATERIALS AS ASBESTOS AND LEAD PAINT. ALL TESTING, IDENTIFICATION, ABATEMENT, CONTROLS, AND HANDLING OF HAZARDOUS MATERIALS SHALL BE UNDERTAKEN BY A HAZARDOUS MATERIAL CONSULTANT AND CERTIFIED PROFESSIONALS. IF SUCH MATERIALS HAVE BEEN IDENTIFIED, CONTRACTOR WILL COMMUNICATE DIRECTLY WITH HAZARDOUS MATERIAL PROFESSIONAL FOR THE PERFORMANCE OF ANY WORK ON OR ADJACENT TO SAID MATERIALS. IF UNIDENTIFIED MATERIALS OF CONCERN ARE ENCOUNTERED WHILE UNDERTAKING THE WORK SHOWN HEREON, CONTRACTOR SHALL IMMEDIATELY NOTIFY ENGINEER AND OWNER, AND SHALL OBTAIN DIRECTION FROM THE HAZARDOUS MATERIAL CONSULTANT PRIOR TO THE CONTINUATION OF WORK INVOLVING SUSPECTED MATERIAL.

UDIG·NY SAFE DIGGING STARTS HERE
CALL 811

UNAUTHORIZED ADDITION OR ALTERATION OF THIS PLAN IS A VIOLATION OF SECTION 7209(2) OF THE NEW YORK STATE EDUCATION LAW.

ALL PRODUCTION & INTELLECTUAL PROPERTY RIGHT RESERVED ©

CAESARS LANE WWTP EXPANSION PROJECT: PHASE 2
145 CAESARS LN.
NEW WINDSOR, NY 12553
FOR TOWN OF NEW WINDSOR
555 UNION AVE.
NEW WINDSOR, NY 12553

ELECTRICAL
NEW WORK
SINGLE LINE DIAGRAMS

REVISIONS

NO.	DESCRIPTION	DATE

ISSUED DATE:	06 JUNE, 2025
DESIGN BY:	RRM
DRAWN BY:	CDJ
CHECKED BY:	MGR
REVIEWED BY:	JER

SHEET NO.
E-016

PROJECT # 18-732 PHASE #

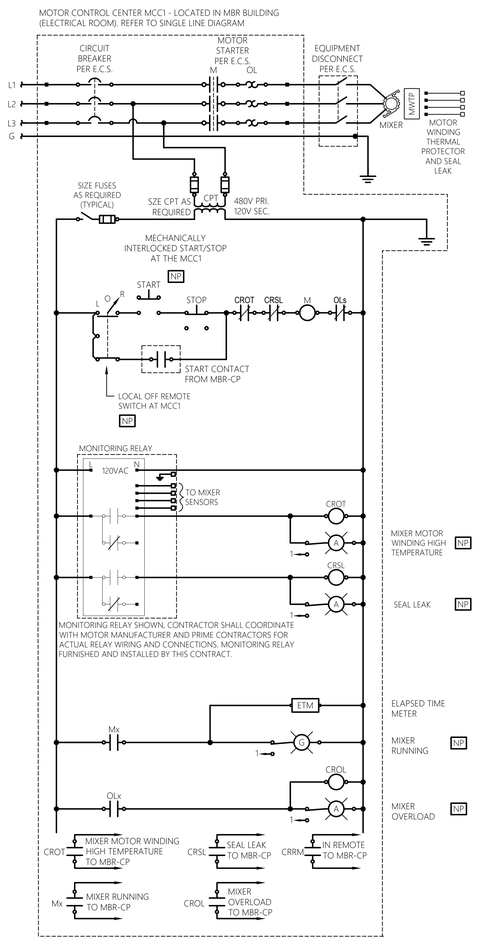

1 E-018 ELEMENTARY WIRING DIAGRAM
SCALE: NTS — ANOXIC MIXERS

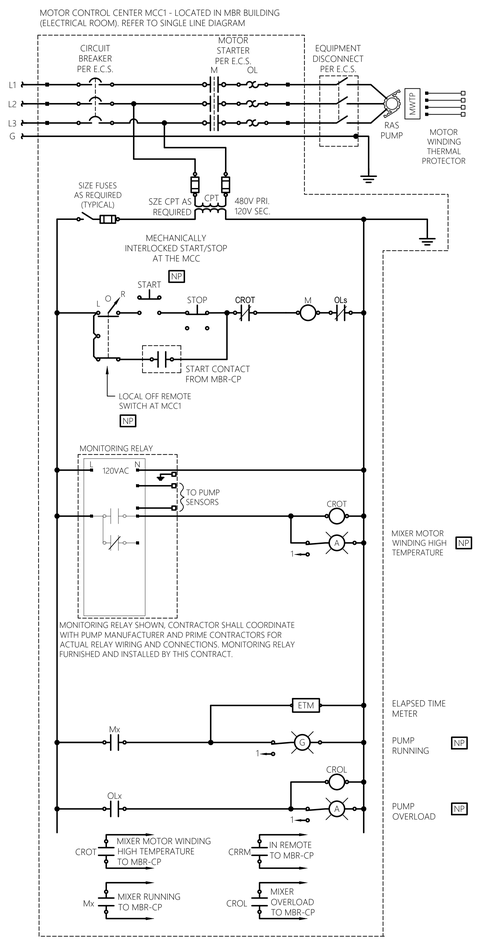

2 E-018 ELEMENTARY WIRING DIAGRAM
SCALE: NTS — RAS PUMPS

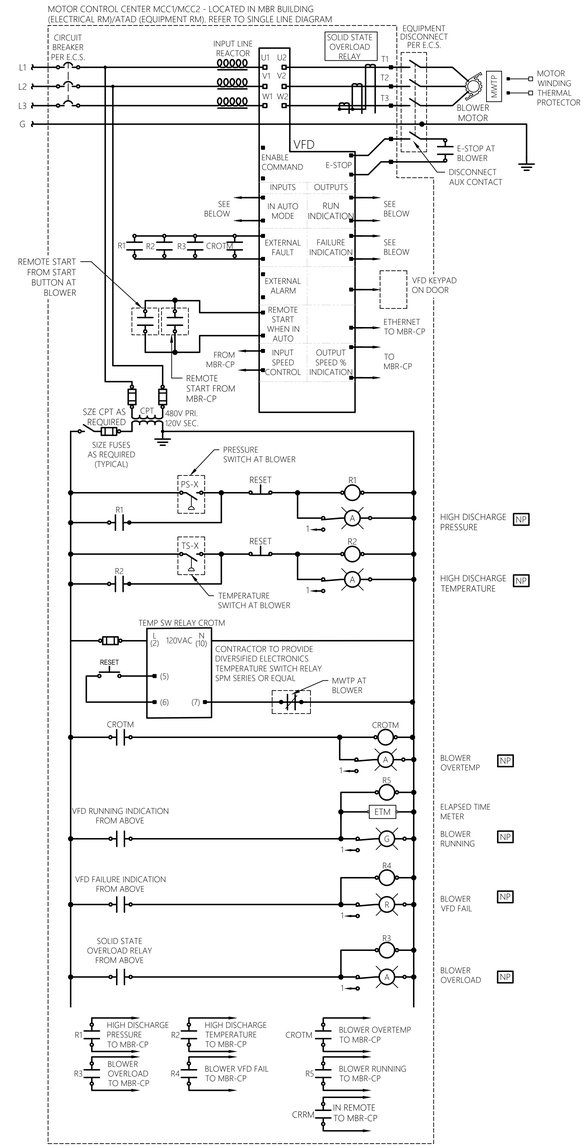

3 E-018 ELEMENTARY WIRING DIAGRAM
SCALE: NTS — MBR BLOWERS

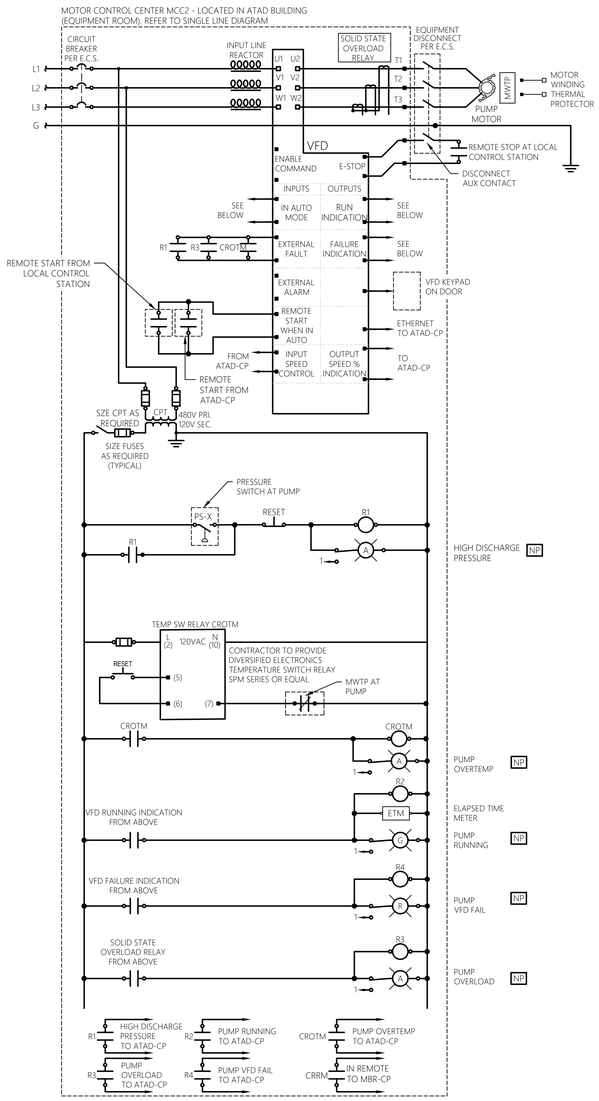

4 E-018 ELEMENTARY WIRING DIAGRAM
SCALE: NTS — ATAD PUMPS

DIAGRAM IS TYPICAL OF ANOXIC MIXERS
(16-MX-211-1, 16-MX-211-2, 16-MX-211-3).

DIAGRAM IS TYPICAL OF RAS PUMPS
(20-P-501-A, 20-P-501-B, 20-P-501-C, 20-P-501-D).

DIAGRAM IS TYPICAL OF ALL BLOWERS
(20-B-201-A, B, C, D, E; 16-B-401-A, B, C, ATAD BLOWERS)

DIAGRAM IS TYPICAL OF ATAD PROCESS PUMPS

GENERAL SHEET NOTES:

1. CONTRACTOR TO SIZE PROPOSED MOTOR STARTERS AND OVERCURRENT PROTECTION DEVICES WITHIN MCC BUCKETS BASED UPON LOAD DATA LISTED WITHIN EQUIPMENT CONNECTION SCHEDULE.
2. REFER TO EQUIPMENT CONNECTION SCHEDULE, SINGLE LINE DIAGRAMS, CONTROL RISER DIAGRAMS, SCHEDULES, DETAILS, AND SPECIFICATIONS FOR CIRCUITING INFORMATION AND ADDITIONAL REQUIREMENTS.
3. NOTE, NOT ALL MCC BUCKET LOADS ARE SHOWN WITHIN DIAGRAMS. THE DIAGRAMS SHOWN ARE OF PERTINENT LOADS AND SPECIAL SITUATIONS.
4. ELEMENTARY WIRING DIAGRAMS ARE INTENDED TO SHOW DESIGN INTENT AND NOT EVERY RELAY, CONTACT, TIMER, CIRCUITRY, ETC. REQUIRED WITHIN THE MCC BUCKET. CONTRACTOR RESPONSIBLE TO WORK WITH THE EQUIPMENT MANUFACTURER/SUPPLIER IN ORDER TO PROVIDE A COMPLETE AND OPERABLE SYSTEM PER DESIGN INTENT SHOWN/SPECIFIED.

MHE ENGINEERING
33 Airport Center Drive, Suite 202
New Windsor, NY 12553
(845) 567-3100
111 Wheatfield Drive, Suite 1
Milford, PA 18337
(570) 296-2765

BID ADDENDUM

JADE STONE ENGINEERING

STATE OF NEW YORK — JEFFREY E. ROBINSON — 095896 — LICENSED PROFESSIONAL ENGINEER

HAZARDOUS MATERIAL NOTE:

THE SERVICES PROVIDED BY MHE, INCLUDING ALL WORK DEPICTED ON MHE PLANS, DO NOT INCLUDE SERVICES RELATED TO THE IDENTIFICATION, CONTROLS OR HANDLING OF HAZARDOUS MATERIALS, INCLUDING SUCH MATERIALS AS ASBESTOS AND LEAD PAINT. ALL TESTING, IDENTIFICATION, ABATEMENT, CONTROLS, AND HANDLING OF HAZARDOUS MATERIALS SHALL BE UNDERTAKEN BY A HAZARDOUS MATERIAL CONSULTANT AND CERTIFIED PROFESSIONALS. IF SUCH MATERIALS HAVE BEEN IDENTIFIED, CONTRACTOR WILL COMMUNICATE DIRECTLY WITH HAZARDOUS MATERIAL PROFESSIONAL FOR THE PERFORMANCE OF ANY WORK ON OR ADJACENT TO SAID MATERIALS. IF UNIDENTIFIED MATERIALS OF CONCERN ARE ENCOUNTERED WHILE UNDERTAKING THE WORK SHOWN HEREON, CONTRACTOR SHALL IMMEDIATELY NOTIFY ENGINEER AND OWNER, AND SHALL OBTAIN DIRECTION FROM THE HAZARDOUS MATERIAL CONSULTANT PRIOR TO THE CONTINUATION OF WORK INVOLVING SUSPECTED MATERIAL.

UDIG·NY SAFE DIGGING STARTS HERE
CALL 811

UNAUTHORIZED ADDITION OR ALTERATION OF THIS PLAN IS A VIOLATION OF SECTION 7209(2) OF THE NEW YORK STATE EDUCATION LAW.

ALL PRODUCTION & INTELLECTUAL PROPERTY RIGHT RESERVED ©

CAESARS LANE WWTP EXPANSION PROJECT: PHASE 2
145 CAESARS LN.
NEW WINDSOR, NY 12553
FOR TOWN OF NEW WINDSOR
555 UNION AVE.
NEW WINDSOR, NY 12553

ELECTRICAL ELEMENTARY WIRING DIAGRAMS

REVISIONS

NO.	DESCRIPTION	DATE

ISSUED DATE:	06 JUNE, 2025
DESIGN BY:	RRM
DRAWN BY:	CDJ
CHECKED BY:	MGR
REVIEWED BY:	JER

SHEET NO.

E-017

PROJECT # 18-732 PHASE #

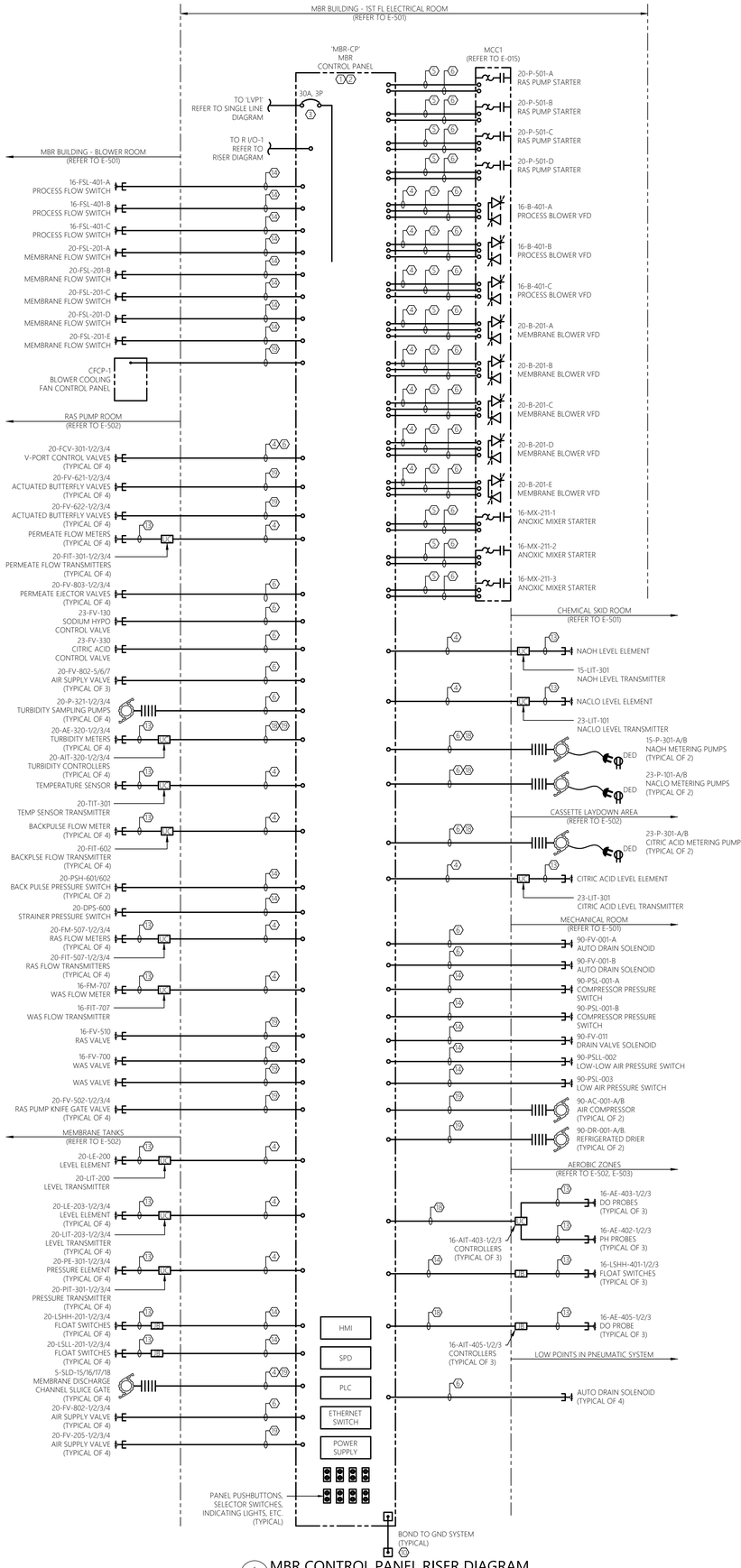

1 E-020 MBR CONTROL PANEL RISER DIAGRAM
SCALE: NTS

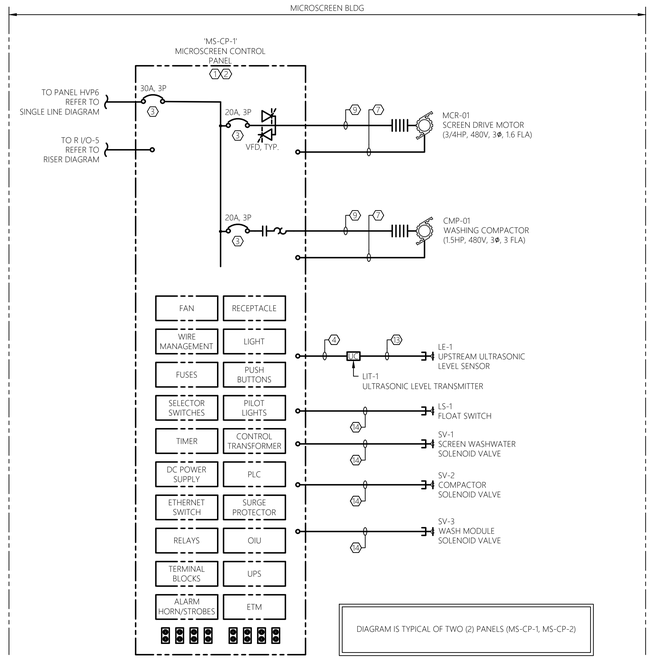

2 E-020 MICROSCREEN CONTROL PANEL RISER DIAGRAM
SCALE: NTS
MICROSCREEN BUILDING

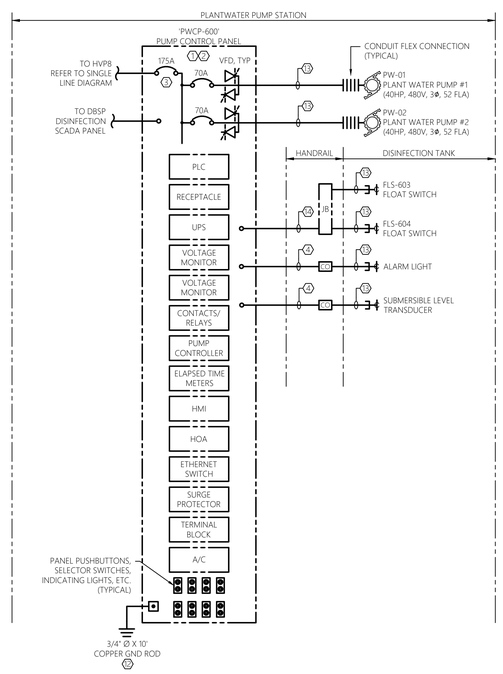

3 E-020 PLANT WATER SYSTEM CONTROL PANEL
SCALE: NTS
PLANTWATER PUMP STATION

GENERAL SHEET NOTES:

1. REFER TO E-001 FOR ELECTRICAL LEGENDS, ABBREVIATIONS AND GENERAL PROJECT NOTES.
2. PROVIDE GROUNDING PER NEC FOR ALL ELECTRICAL EQUIPMENT AND ASSOCIATED EQUIPMENT.
3. ALL CONDUCTORS NOT SHOWN FOR CLARITY. COORDINATE WITH ALL PRIME CONTRACTORS AND PROVIDE COMPLETE ELECTRICAL CIRCUITING FOR ALL INSTALLED EQUIPMENT. ALL REQUIREMENTS TO BE PER NEC.
4. REFER TO FLOOR PLANS FOR GENERAL DEVICE/EQUIPMENT LOCATIONS. COORDINATE FINAL LOCATIONS WITH PROCESS MECHANICAL DRAWINGS. REFER TO SITE PLAN FOR DUCT BANK INFORMATION.
5. REFER TO SINGLE LINE DIAGRAMS, SPECIFICATIONS, AND SUBMITTAL DOCUMENTATION FOR ADDITIONAL INFORMATION/REQUIREMENTS.
6. CONTRACTOR TO COORDINATE ALL ASPECTS OF SEQUENCE OF CONSTRUCTION WITH OWNER ALL OTHER TRADE CONTRACTORS.
7. CIRCUITS SHOWN ARE POWER, CONTROL, INSTRUMENTATION, AND CONTROL CIRCUIT POWER. REFER TO SINGLE LINE DIAGRAMS, SCHEDULES, AND DETAILS FOR ADDITIONAL CIRCUITS.
8. ALL WIRING REQUIREMENTS INCLUDING BUT NOT LIMITED TO WIRE SIZE, TYPE, AND QUANTITY OF CONDUCTORS TO BE VERIFIED WITH EQUIPMENT MANUFACTURER.
9. QUANTITY OF CONDUCTORS CALLED FOR MAY INCLUDE SPARE CONDUCTORS. PROVIDE CONDUCTORS SHOWN OR MINIMUM NUMBER REQUIRED PER MANUFACTURERS WRITTEN INSTRUCTIONS. ALL REQUIREMENTS TO BE PER NEC.
10. CONTRACTOR TO PROVIDE ARC FLASH WARNING LABELS FOR ALL NEW OR MODIFIED ELECTRICAL EQUIPMENT. REFER TO SPECIFICATIONS FOR REQUIREMENTS.
11. REFER TO ELECTRICAL DETAIL SHEETS AND SCHEDULE SHEETS FOR ADDITIONAL INFORMATION/REQUIREMENTS.
12. CONTRACTOR TO COORDINATE MOUNTING LOCATIONS OF ALL PANELS WITH OWNER AND ALL OTHER TRADE CONTRACTORS. PROVIDE ALL NECESSARY MOUNTING HARDWARE, BRACKETS, ACCESSORIES, ETC..
13. PROVIDE INTRINSICALLY SAFE BARRIERS AS REQUIRED INTERNAL TO CONTROL PANELS. ALL REQUIREMENTS TO BE PER NEC.
14. NOT ALL REQUIRED CLASSIFIED SPACE WIRING METHODS INCLUDING, BUT NOT LIMITED TO SEAL-OFFS MAY BE SHOWN. PROVIDE WIRING METHODS PER NEC (LATEST EDITION). PROVIDE CONDUIT UNION WITHIN 6" OF EACH SEAL-OFF AT CONTROL PANELS, DISTRIBUTION PANELS, VFDS, STARTERS, DISCONNECTS, OR SOURCE OF SUPPLY WHERE FEASIBLE.
15. NOT ALL REQUIRED THRU-WALL, WATERTIGHT, CONDUIT PENETRATIONS SHOWN FOR CLARITY. CONTRACTOR TO PROVIDE A THRU-WALL, WATERTIGHT, CONDUIT PENETRATION FOR ALL CONDUIT PENETRATIONS WITHIN BUILDING INTERIOR/EXTERIOR WALLS AND FLOORS. REFER TO ELECTRICAL DETAILS FOR ADDITIONAL INFORMATION. COORDINATE WITH OWNER AND ALL OTHER TRADE CONTRACTORS PRIOR TO ROUGH-IN.
16. CONTRACTOR TO COORDINATE ALL CONDUIT PENETRATIONS AND CONDUIT ROUTING WITH ALL OTHER TRADE CONTRACTORS AND OWNER PRIOR TO ROUGH-IN.
17. ALL CONDUCTORS TO BE COPPER AND CONTAIN THWN OR XHHW INSULATION.
18. ALL CONTROL/COMMUNICATION WIRING REQUIREMENTS INCLUDING BUT NOT LIMITED TO WIRE SIZE, TYPE, AND QUANTITY OF CONDUCTORS TO BE VERIFIED WITH EQUIPMENT MANUFACTURER.
19. ALL PROPOSED EQUIPMENT LOCATIONS/INSTALLATIONS TO COMPLY WITH NEC ARTICLE 110.26 'SPACES ABOUT ELECTRICAL EQUIPMENT'.

SHEET KEY NOTES:

1. NOT ALL INTERNAL COMPONENTS SHOWN FOR CLARITY. DIAGRAM IS INTENDED TO SHOW ALL REQUIRED FIELD CIRCUITING REQUIRED UNDER THIS CONTRACT. REFERENCE SUBMITTAL DOCUMENTATION FOR ALL PANEL INTERNAL COMPONENTS. CONTRACTOR TO PROVIDE ADDITIONAL INTERNAL CONTACTS AND JUMPERS PER CONTROL PANEL MANUFACTURERS RECOMMENDATIONS FOR AN OVERALL COMPLETE AND OPERABLE SYSTEM.
2. CONTROL PANEL AND ALL INTERNAL COMPONENTS ARE BY THIS CONTRACT. THIS CONTRACT IS RESPONSIBLE FOR ALL FIELD WIRING BETWEEN DEVICES, TERMINATIONS, AND MOUNTING/INSTALLATION OF PANEL AS SHOWN/INDICATED. REFER TO SUBMITTAL DOCUMENTATION AND COORDINATE WITH ALL OTHER TRADE CONTRACTORS TO PROVIDE COMPLETE SYSTEM FIELD CIRCUITRY AND TERMINATIONS AS REQUIRED FOR A COMPLETE AND OPERABLE SYSTEM.
3. DISCONNECT SIZE SHOWN FOR BIDDING PURPOSES ONLY. COORDINATE DISCONNECT SIZE WITH EQUIPMENT MANUFACTURERS RECOMMENDATIONS. COORDINATE CONDUCTOR/CONDUIT SIZE WITH MANUFACTURERS RECOMMENDED DISCONNECT SIZE. ALL REQUIREMENTS TO BE PER NEC.
4. (2)#18STP, 3/4"C
5. CAT 6 CABLE, 1"C
6. (12)#14, 1"C
7. (4)#14, 3/4"C. CIRCUIT TO BE UTILIZED FOR THE ASSOCIATED MOTOR THERMAL SAFETY SWITCH. CIRCUIT TO CONTROL TERMINALS OF PROPOSED VFD. IN THE EVENT OF A MOTOR HIGH TEMPERATURE, THE UNIT IS TO BE SHUT DOWN TO PREVENT DAMAGE. NOTE, TWO CONDUCTORS TO BE UTILIZED AS SPARES.
8. (4)#14, 3/4"C. CIRCUIT TO BE UTILIZED FOR THE ASSOCIATED MOTOR THERMAL SAFETY SWITCH. CIRCUIT TO CONTROL TERMINALS OF PROPOSED STARTER. IN THE EVENT OF A MOTOR HIGH TEMPERATURE, THE UNIT IS TO BE SHUT DOWN TO PREVENT DAMAGE. NOTE, TWO CONDUCTORS TO BE UTILIZED AS SPARES.
9. (3)#12 & #12G, 1"C. PROVIDE AS VFD SHIELDED CABLE. CONDUIT SIZE IS LISTED AS MINIMUM, PROVIDE LARGER DIAMETER AS REQUIRED PER MANUFACTURER. REFER TO SPECIFICATIONS FOR ADDITIONAL INFORMATION. ALL REQUIREMENTS TO BE PER NEC.
10. (4)#14, 3/4"C. CIRCUIT TO BE UTILIZED TO SHUT DOWN THE PROPOSED STARTER IN THE EVENT THE DISCONNECT IS OPENED AND PROVIDE STATUS OF OPEN DISCONNECT VIA PILOT LIGHT.
11. (3)#12 & #12G, 3/4"C. PROVIDE AS VFD SHIELDED CABLE. CONDUIT SIZE IS LISTED AS MINIMUM, PROVIDE LARGER DIAMETER AS REQUIRED PER MANUFACTURER. REFER TO SPECIFICATIONS FOR ADDITIONAL INFORMATION. ALL REQUIREMENTS TO BE PER NEC.
12. CONTRACTOR TO PROVIDE TWO (2) 3/4"Ø x 10' COPPER GROUND RODS. PROVIDE GROUNDING ELECTRODE FOR CONTROL PANEL PER NEC. GROUND RODS TO BE PLACED AT MINIMUM OF 10 FEET APART. BOND GROUND RODS TOGETHER WITH A LOOPED #6 COPPER CONDUCTOR.
13. FACTORY CABLE BY THIS CONTRACT. THIS CONTRACT RESPONSIBLE FOR ALL TERMINATIONS PER MANUFACTURERS RECOMMENDATIONS. PROVIDE 3/4" CONDUIT WHERE EXPOSED TO PHYSICAL DAMAGE AND RECOMMENDED BY THE EQUIPMENT MANUFACTURER. CONDUIT SIZE IS LISTED AS MINIMUM, PROVIDE LARGER AS REQUIRED PER MANUFACTURER. COORDINATE FINAL INSTALLATION REQUIREMENTS WITH ALL OTHER TRADE CONTRACTORS.
14. (4)#14, 3/4"C.
15. (2)#14, 3/4"C.
16. PROVIDE CONDUIT BUSHING, FITTING, OR FLEX CONNECTION AS REQUIRED FOR PROPER CONNECTION OF DEVICE. ALL BUSHINGS, FITTINGS, OR FLEX CONNECTIONS TO BE SUITED FOR ENVIRONMENT INSTALLED WITHIN. COORDINATE WITH EQUIPMENT MANUFACTURER. FLEX CONNECTION LENGTHS TO BE MINIMIZED TO GREATEST EXTENT POSSIBLE. TYPICAL
17. CONTRACTOR TO PROVIDE TWO (2) 3/4"Ø x 10' COPPER GROUND RODS. PROVIDE GROUNDING ELECTRODE FOR CONTROL PANEL PER NEC. GROUND RODS TO BE PLACED AT MINIMUM OF 10 FEET APART. BOND GROUND RODS TOGETHER WITH A LOOPED #6 COPPER CONDUCTOR.
18. (4)#18STP, 3/4"C.
19. (20)#14, 1"C.

CONTROL DIAGRAMS ARE SCHEMATIC IN NATURE AND SHOWS ALL INTERCONNECTIONS. CONTRACTOR MAY GROUP POWER CIRCUITS INTO LARGER CONDUIT AND GROUP CONTROL CIRCUITS INTO SEPARATE LARGER CONDUIT. GROUPING OF CIRCUITS INTO LARGER CONDUITS MUST COMPLY WITH NEC FILL AND DERATING REQUIREMENTS. VFD INPUT & OUTPUT CONDUCTORS MUST BE RUN INDEPENDENT OF OTHER CONDUCTORS.

MHE ENGINEERING
33 Airport Center Drive, Suite 202
New Windsor, NY 12553
(845) 567-3100
111 Wheatfield Drive, Suite 1
Milford, PA 18337
(570) 296-2765

BID ADDENDUM

JADE STONE ENGINEERING

STATE OF NEW YORK · JEFFREY E. ROBINSON · 095896 · LICENSED PROFESSIONAL ENGINEER

HAZARDOUS MATERIAL NOTE:

THE SERVICES PROVIDED BY MHE, INCLUDING ALL WORK DEPICTED ON MHE PLANS, DO NOT INCLUDE SERVICES RELATED TO THE IDENTIFICATION, CONTROLS OR HANDLING OF HAZARDOUS MATERIALS, INCLUDING SUCH MATERIALS AS ASBESTOS AND LEAD PAINT. ALL TESTING, IDENTIFICATION, ABATEMENT, CONTROLS, AND HANDLING OF HAZARDOUS MATERIALS SHALL BE UNDERTAKEN BY A HAZARDOUS MATERIAL CONSULTANT AND CERTIFIED PROFESSIONALS. IF SUCH MATERIALS HAVE BEEN IDENTIFIED, CONTRACTOR WILL COMMUNICATE DIRECTLY WITH HAZARDOUS MATERIAL PROFESSIONAL FOR THE PERFORMANCE OF ANY WORK ON OR ADJACENT TO SAID MATERIALS. IF UNIDENTIFIED MATERIALS OF CONCERN ARE ENCOUNTERED WHILE UNDERTAKING THE WORK SHOWN HEREON, CONTRACTOR SHALL IMMEDIATELY NOTIFY ENGINEER AND OWNER, AND SHALL OBTAIN DIRECTION FROM THE HAZARDOUS MATERIAL CONSULTANT PRIOR TO THE CONTINUATION OF WORK INVOLVING SUSPECTED MATERIAL.

UDIG·NY SAFE DIGGING STARTS HERE
CALL 811

UNAUTHORIZED ADDITION OR ALTERATION OF THIS PLAN IS A VIOLATION OF SECTION 7209(2) OF THE NEW YORK STATE EDUCATION LAW.

ALL PRODUCTION & INTELLECTUAL PROPERTY RIGHT RESERVED ©

CAESARS LANE WWTP EXPANSION PROJECT: PHASE 2
145 CAESARS LN.
NEW WINDSOR, NY 12553
FOR TOWN OF NEW WINDSOR
555 UNION AVE.
NEW WINDSOR, NY 12553

ELECTRICAL RISER DIAGRAMS

REVISIONS

NO.	DESCRIPTION	DATE

ISSUED DATE:	06 JUNE, 2025
DESIGN BY:	RRM
DRAWN BY:	CDJ
CHECKED BY:	MGR
REVIEWED BY:	JER

SHEET NO.

E-020

PROJECT # 18-732 PHASE #

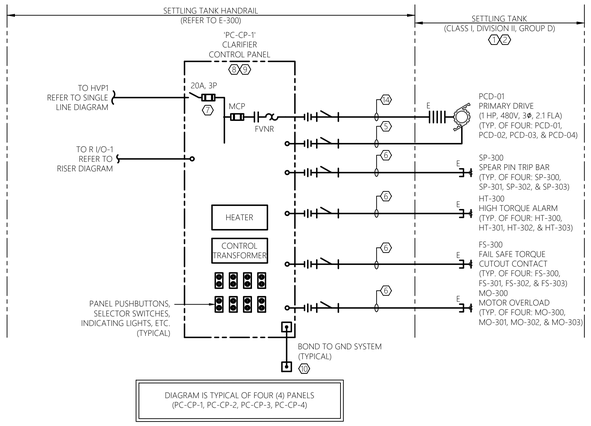

1 E-021 CLARIFIER CONTROL PANEL RISER DIAGRAM
SCALE: NTS — SETTLING TANKS

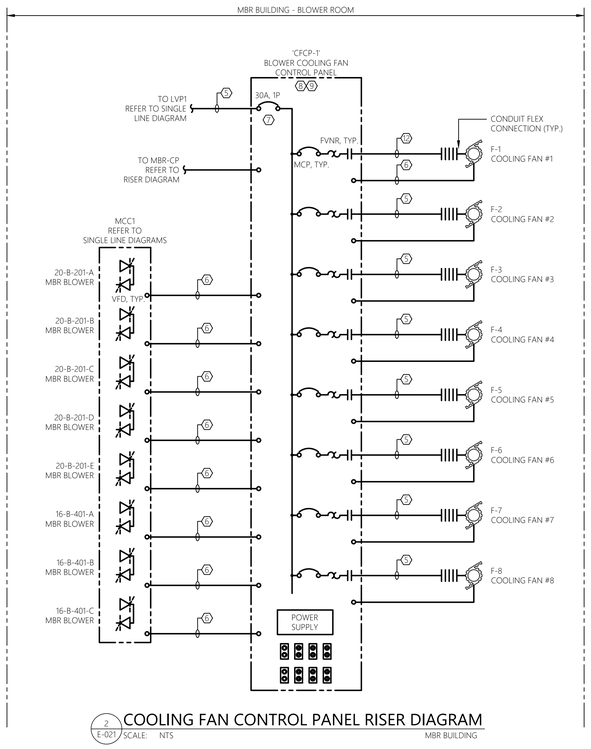

2 E-021 COOLING FAN CONTROL PANEL RISER DIAGRAM
SCALE: NTS — MBR BUILDING

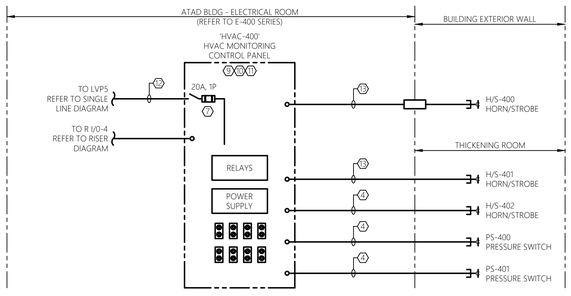

3 E-021 HVAC MONITORING CONTROL PANEL RISER DIAGRAM
SCALE: NTS — ATAD BUILDING

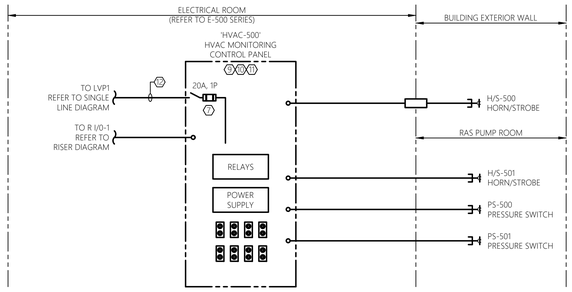

4 E-021 HVAC MONITORING CONTROL PANEL RISER DIAGRAM
SCALE: NTS — MBR BUILDING

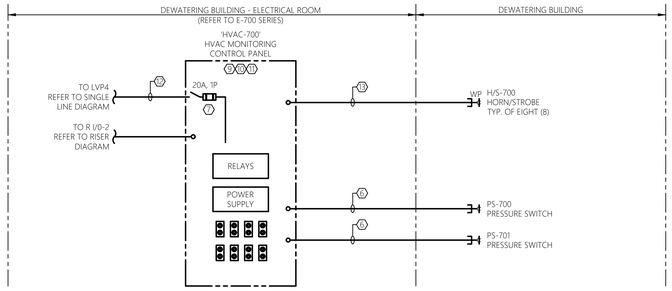

5 E-021 HVAC MONITORING CONTROL PANEL RISER DIAGRAM
SCALE: NTS — DEWATERING BUILDING

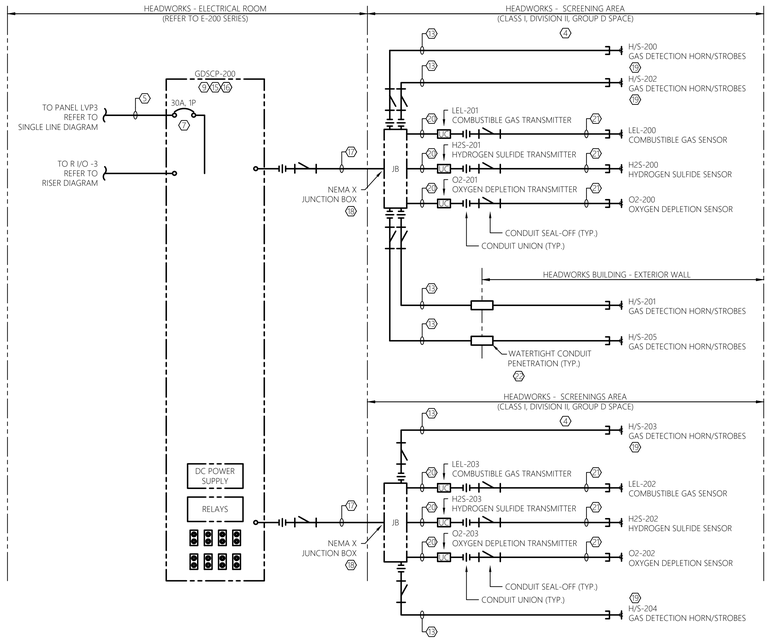

6 E-021 GAS DETECTION SYSTEM CONTROL PANEL RISER DIAGRAM
SCALE: NTS — HEADWORKS ELECTRICAL ROOM

GENERAL SHEET NOTES:

1. REFER TO E-001 FOR ELECTRICAL LEGENDS, ABBREVIATIONS AND GENERAL PROJECT NOTES.
2. PROVIDE GROUNDING PER NEC FOR ALL ELECTRICAL EQUIPMENT AND ASSOCIATED EQUIPMENT.
3. ALL CONDUCTORS NOT SHOWN FOR CLARITY. COORDINATE WITH ALL PRIME CONTRACTORS AND PROVIDE COMPLETE ELECTRICAL CIRCUITING FOR ALL INSTALLED EQUIPMENT. ALL REQUIREMENTS TO BE PER NEC.
4. REFER TO FLOOR PLANS FOR GENERAL DEVICE/EQUIPMENT LOCATIONS. COORDINATE FINAL LOCATIONS WITH PROCESS MECHANICAL DRAWINGS. REFER TO SITE PLAN FOR DUCT BANK INFORMATION.
5. REFER TO SINGLE LINE DIAGRAMS, SPECIFICATIONS, AND SUBMITTAL DOCUMENTATION FOR ADDITIONAL INFORMATION/REQUIREMENTS.
6. CONTRACTOR TO COORDINATE ALL ASPECTS OF SEQUENCE OF CONSTRUCTION WITH OWNER ALL OTHER TRADE CONTRACTORS.
7. CIRCUITS SHOWN ARE POWER, CONTROL, INSTRUMENTATION, AND CONTROL CIRCUIT POWER. REFER TO SINGLE LINE DIAGRAMS, SCHEDULES, AND DETAILS FOR ADDITIONAL CIRCUITS.
8. ALL WIRING REQUIREMENTS INCLUDING BUT NOT LIMITED TO WIRE SIZE, TYPE, AND QUANTITY OF CONDUCTORS TO BE VERIFIED WITH EQUIPMENT MANUFACTURER.
9. QUANTITY OF CONDUCTORS CALLED FOR MAY INCLUDE SPARE CONDUCTORS. PROVIDE CONDUCTORS SHOWN OR MINIMUM NUMBER REQUIRED PER MANUFACTURERS WRITTEN INSTRUCTIONS. ALL REQUIREMENTS TO BE PER NEC.
10. CONTRACTOR TO PROVIDE ARC FLASH WARNING LABELS FOR ALL NEW OR MODIFIED ELECTRICAL EQUIPMENT. REFER TO SPECIFICATIONS FOR REQUIREMENTS.
11. REFER TO ELECTRICAL DETAIL SHEETS AND SCHEDULE SHEETS FOR ADDITIONAL INFORMATION/REQUIREMENTS.
12. CONTRACTOR TO COORDINATE MOUNTING LOCATIONS OF ALL PANELS WITH OWNER AND ALL OTHER TRADE CONTRACTORS. PROVIDE ALL NECESSARY MOUNTING HARDWARE, BRACKETS, ACCESSORIES, ETC..
13. PROVIDE INTRINSICALLY SAFE BARRIERS AS REQUIRED INTERNAL TO CONTROL PANELS. ALL REQUIREMENTS TO BE PER NEC.
14. NOT ALL REQUIRED CLASSIFIED SPACE WIRING METHODS INCLUDING, BUT NOT LIMITED TO SEAL-OFFS MAY BE SHOWN. PROVIDE WIRING METHODS PER NEC (LATEST EDITION). PROVIDE CONDUIT UNION WITHIN 6" OF EACH SEAL-OFF AT CONTROL PANELS, DISTRIBUTION PANELS, VFDS, STARTERS, DISCONNECTS, OR SOURCE OF SUPPLY WHERE FEASIBLE.
15. NOT ALL REQUIRED THRU-WALL, WATERTIGHT, CONDUIT PENETRATIONS SHOWN FOR CLARITY. CONTRACTOR TO PROVIDE A THRU-WALL, WATERTIGHT, CONDUIT PENETRATION FOR ALL CONDUIT PENETRATIONS WITHIN BUILDING INTERIOR/EXTERIOR WALLS AND FLOORS. REFER TO ELECTRICAL DETAILS FOR ADDITIONAL INFORMATION. COORDINATE WITH OWNER AND ALL OTHER TRADE CONTRACTORS PRIOR TO ROUGH-IN
16. CONTRACTOR TO COORDINATE ALL CONDUIT PENETRATIONS AND CONDUIT ROUTING WITH ALL OTHER TRADE CONTRACTORS AND OWNER PRIOR TO ROUGH-IN.
17. ALL CONDUCTORS TO BE COPPER AND CONTAIN THWN OR XHHW INSULATION.
18. ALL CONTROL/COMMUNICATION WIRING REQUIREMENTS INCLUDING BUT NOT LIMITED TO WIRE SIZE, TYPE, AND QUANTITY OF CONDUCTORS TO BE VERIFIED WITH EQUIPMENT MANUFACTURER.
19. ALL PROPOSED EQUIPMENT LOCATIONS/INSTALLATIONS TO COMPLY WITH NEC ARTICLE 110.26 'SPACES ABOUT ELECTRICAL EQUIPMENT'.

SHEET KEY NOTES:

1. TANK INTERIOR IS CLASS I, DIVISION II, GROUP D SPACE. CLASSIFICATION EXTENDS TO THE MINIMUM OPERATING WATER SURFACE TO THE TOP OF THE WALL; ENVELOPE 18" ABOVE THE TOP OF THE TANK AND EXTENDING 18" BEYOND THE EXTERIOR WALL; ENVELOPE 18" ABOVE GRADE EXTENDING 10' HORIZONTALLY FROM THE EXTERIOR WALLS. ALL WIRING METHODS WITHIN THIS SPACE TO COMPLY WITH NEC ARTICLE 501. ALL ELECTRICAL EQUIPMENT AND DEVICES WITHIN THIS SPACE TO BE EXPLOSION PROOF RATED FOR USE IN A CLASS I, DIVISION II, GROUP D ENVIRONMENT.
2. ALL ELECTRICAL EQUIPMENT, COMPONENTS, DEVICES, AND RACEWAY SYSTEMS TO BE KEPT OUT OF CLASSIFIED AREAS TO GREATEST EXTENT POSSIBLE.
3. AREA IS CLASS I, DIVISION II, GROUP D SPACE. CLASSIFICATION EXTENDS TO WITHIN 10' ENVELOPE AROUND EQUIPMENT AND OPEN CHANNEL. ALL WIRING METHODS WITHIN THIS SPACE TO COMPLY WITH NEC ARTICLE 501. ALL ELECTRICAL EQUIPMENT AND DEVICES WITHIN THIS SPACE TO BE EXPLOSION PROOF RATED FOR USE IN A CLASS I, DIVISION II, GROUP D ENVIRONMENT.
4. AREA IS CLASS I, DIVISION II, GROUP D SPACE. CLASSIFICATION EXTENDS TO ENTIRE ENCLOSED SPACE. ALL WIRING METHODS WITHIN THIS SPACE TO COMPLY WITH NEC ARTICLE 501. ALL ELECTRICAL EQUIPMENT AND DEVICES WITHIN THIS SPACE TO BE EXPLOSION PROOF RATED FOR USE IN A CLASS I, DIVISION II, GROUP D ENVIRONMENT.
5. (2)#10 & #10G, 3/4"C.
6. (4)#14, 3/4"C.
7. DISCONNECT SIZE SHOWN FOR BIDDING PURPOSES ONLY. COORDINATE DISCONNECT SIZE WITH EQUIPMENT MANUFACTURERS RECOMMENDATIONS. COORDINATE CONDUCTOR/CONDUIT SIZE WITH MANUFACTURERS RECOMMENDED DISCONNECT SIZE. ALL REQUIREMENTS TO BE PER NEC.
8. NOT ALL INTERNAL COMPONENTS SHOWN FOR CLARITY. DIAGRAM IS INTENDED TO SHOW ALL REQUIRED FIELD CIRCUITING REQUIRED UNDER THIS CONTRACT. REFERENCE SUBMITTAL DOCUMENTATION FOR ALL PANEL INTERNAL COMPONENTS. CONTRACTOR TO PROVIDE ADDITIONAL INTERNAL CONTACTS AND JUMPERS PER CONTROL PANEL MANUFACTURERS RECOMMENDATIONS FOR AN OVERALL COMPLETE AND OPERABLE SYSTEM.
9. CONTROL PANEL AND ALL INTERNAL COMPONENTS ARE BY THIS CONTRACT. THIS CONTRACT IS RESPONSIBLE FOR ALL FIELD WIRING BETWEEN DEVICES, TERMINATIONS, AND MOUNTING/INSTALLATION OF PANEL AS SHOWN/INDICATED. REFER TO SUBMITTAL DOCUMENTATION AND COORDINATE WITH ALL OTHER TRADE CONTRACTORS TO PROVIDE COMPLETE SYSTEM FIELD CIRCUITRY AND TERMINATIONS AS REQUIRED FOR A COMPLETE AND OPERABLE SYSTEM.
10. CONTRACTOR TO PROVIDE HVAC MONITORING CONTROL PANEL, HORN/ALARM LIGHTS, AND ALL ACCESSORIES FOR A COMPLETE AND OPERABLE SYSTEM. PROVIDE WITHIN NEMA 12 ENCLOSURE.
11. CONTRACTOR TO WORK WITH CSI TO PROVIDE RELAY BASED CONTROL PANEL. UPON A LOSS OF ADEQUATE AIR FLOW OR A VENTILATION FAN FAILURE, THE CONTROL PANEL IS TO ENERGIZE THE APPROPRIATE LED WARNING LIGHTS AND SOUNDER/HORN. COORDINATE OVERALL SEQUENCE OF OPERATION WITH ENGINEER DURING SUBMITTAL PHASE.
12. (2)#12 & #12G, 3/4"C.
13. (12)#14, 3/4"C.
14. (3)#12 & #12G, 3/4"C.
15. GAS DETECTION SYSTEM CONTROL PANEL 'GDSCP-200' AND ASSOCIATED SENSORS, TRANSMITTERS, COMPONENTS & DEVICES ARE TO BE PROVIDED AND INSTALLED UNDER THIS CONTRACT. REFER TO SPECIFICATIONS FOR ADDITIONAL INFORMATION/REQUIREMENTS.
16. CONTRACTOR TO PROVIDE ADDITIONAL DC POWER SUPPLY SIZED AS NECESSARY WITHIN NEMA 1 ENCLOSURE TO PROVIDE 24 VDC POWER TO PROPOSED TRANSMITTERS, HORNS, AND STROBES. PROVIDE CIRCUITRY (CONDUITS AND CONDUCTORS) AND TERMINATIONS AS REQUIRED.
17. (6)#18STP & (36)#14, 2"C.
18. CONTRACTOR TO PROVIDE JUNCTION/PULL BOXES AS REQUIRED. COORDINATE FINAL LOCATIONS WITH OTHER TRADE CONTRACTORS (NOTE, JUNCTION BOXES ARE NOT ALWAYS SHOWN ON FLOOR PLANS. CONTRACTOR TO FIELD LOCATE AS NECESSARY). JUNCTION BOXES ARE TO BE RATED FOR ENVIRONMENT INSTALLED, INCLUDING BUT NOT LIMITED TO HAZARDOUS ENVIRONMENTS AND OUTDOORS INSTALLATIONS. CONTRACTOR TO SIZE JUNCTION BOXES PER NEC ARTICLE 314. TYPICAL OF ALL JUNCTION BOXES SHOWN ON THIS DRAWING.
19. REFER TO ELECTRICAL PLANS FOR GENERAL LOCATION, FINAL LOCATION AND MOUNTING HEIGHT TO BE COORDINATED WITH THE OWNER. PROVIDE ALL REQUIRED STAINLESS STEEL MOUNTING HARDWARE, BRACKETS, ACCESSORIES, ETC... FOR A COMPLETE AND OPERABLE SYSTEM. NOTE, MAY INCLUDE MULTIPLE DEVICES. REFER TO SPECIFICATIONS FOR ADDITIONAL INFORMATION. TYPICAL OF TWO (2), THIS SHEET.
20. (2)#18STP & (4)#14, 3/4"C.
21. FACTORY CABLE. THIS CONTRACT RESPONSIBLE FOR ALL TERMINATIONS PER MANUFACTURERS RECOMMENDATIONS. PROVIDE 3/4" CONDUIT WHERE EXPOSED TO PHYSICAL DAMAGE AND RECOMMENDED BY THE EQUIPMENT MANUFACTURER. CONDUIT SIZE IS LISTED AS MINIMUM. PROVIDE LARGER AS REQUIRED PER MANUFACTURER. COORDINATE FINAL INSTALLATION REQUIREMENTS WITH MANUFACTURER.
22. REFER TO ELECTRICAL DETAILS FOR ADDITIONAL INFORMATION/REQUIREMENTS. CLOSELY COORDINATE FINAL PENETRATION LOCATION/REQUIREMENTS WITH OTHER TRADE CONTRACTORS AND OWNER. TYPICAL.

CONTROL DIAGRAMS ARE SCHEMATIC IN NATURE AND SHOWS ALL INTERCONNECTIONS. CONTRACTOR MAY GROUP POWER CIRCUITS INTO LARGER CONDUIT AND GROUP CONTROL CIRCUITS INTO SEPARATE LARGER CONDUIT. GROUPING OF CIRCUITS INTO LARGER CONDUITS MUST COMPLY WITH NEC FILL AND DERATING REQUIREMENTS. VFD INPUT & OUTPUT CONDUCTORS MUST BE RUN INDEPENDENT OF OTHER CONDUCTORS.

MHE ENGINEERING
33 Airport Center Drive, Suite 202
New Windsor, NY 12553
(845) 567-3100
111 Wheatfield Drive, Suite 1
Milford, PA 18337
(570) 296-2765

BID ADDENDUM

JADE STONE ENGINEERING

STATE OF NEW YORK — JEFFREY E. ROBINSON — 095896 — LICENSED PROFESSIONAL ENGINEER

HAZARDOUS MATERIAL NOTE:
THE SERVICES PROVIDED BY MHE, INCLUDING ALL WORK DEPICTED ON MHE PLANS, DO NOT INCLUDE SERVICES RELATED TO THE IDENTIFICATION, CONTROLS OR HANDLING OF HAZARDOUS MATERIALS, INCLUDING SUCH MATERIALS AS ASBESTOS AND LEAD PAINT. ALL TESTING, IDENTIFICATION, ABATEMENT, CONTROLS, AND HANDLING OF HAZARDOUS MATERIALS SHALL BE UNDERTAKEN BY A HAZARDOUS MATERIAL CONSULTANT AND CERTIFIED PROFESSIONALS. IF SUCH MATERIALS HAVE BEEN IDENTIFIED, CONTRACTOR WILL COMMUNICATE DIRECTLY WITH HAZARDOUS MATERIAL PROFESSIONAL FOR THE PERFORMANCE OF ANY WORK ON OR ADJACENT TO SAID MATERIALS. IF UNIDENTIFIED MATERIALS OF CONCERN ARE ENCOUNTERED WHILE UNDERTAKING THE WORK SHOWN HEREON, CONTRACTOR SHALL IMMEDIATELY NOTIFY ENGINEER AND OWNER, AND SHALL OBTAIN DIRECTION FROM THE HAZARDOUS MATERIAL CONSULTANT PRIOR TO THE CONTINUATION OF WORK INVOLVING SUSPECTED MATERIAL.

UDIG·NY SAFE DIGGING STARTS HERE
CALL 811

UNAUTHORIZED ADDITION OR ALTERATION OF THIS PLAN IS A VIOLATION OF SECTION 7209(2) OF THE NEW YORK STATE EDUCATION LAW.

ALL PRODUCTION & INTELLECTUAL PROPERTY RIGHT RESERVED ©

CAESARS LANE WWTP EXPANSION PROJECT: PHASE 2
145 CAESARS LN.
NEW WINDSOR, NY 12553
FOR TOWN OF NEW WINDSOR
555 UNION AVE.
NEW WINDSOR, NY 12553

ELECTRICAL RISER DIAGRAMS

REVISIONS

NO.	DESCRIPTION	DATE

ISSUED DATE:	06 JUNE, 2025
DESIGN BY:	RRM
DRAWN BY:	CDJ
CHECKED BY:	MGR
REVIEWED BY:	JER

SHEET NO.
E-021

PROJECT # 18-732 PHASE #

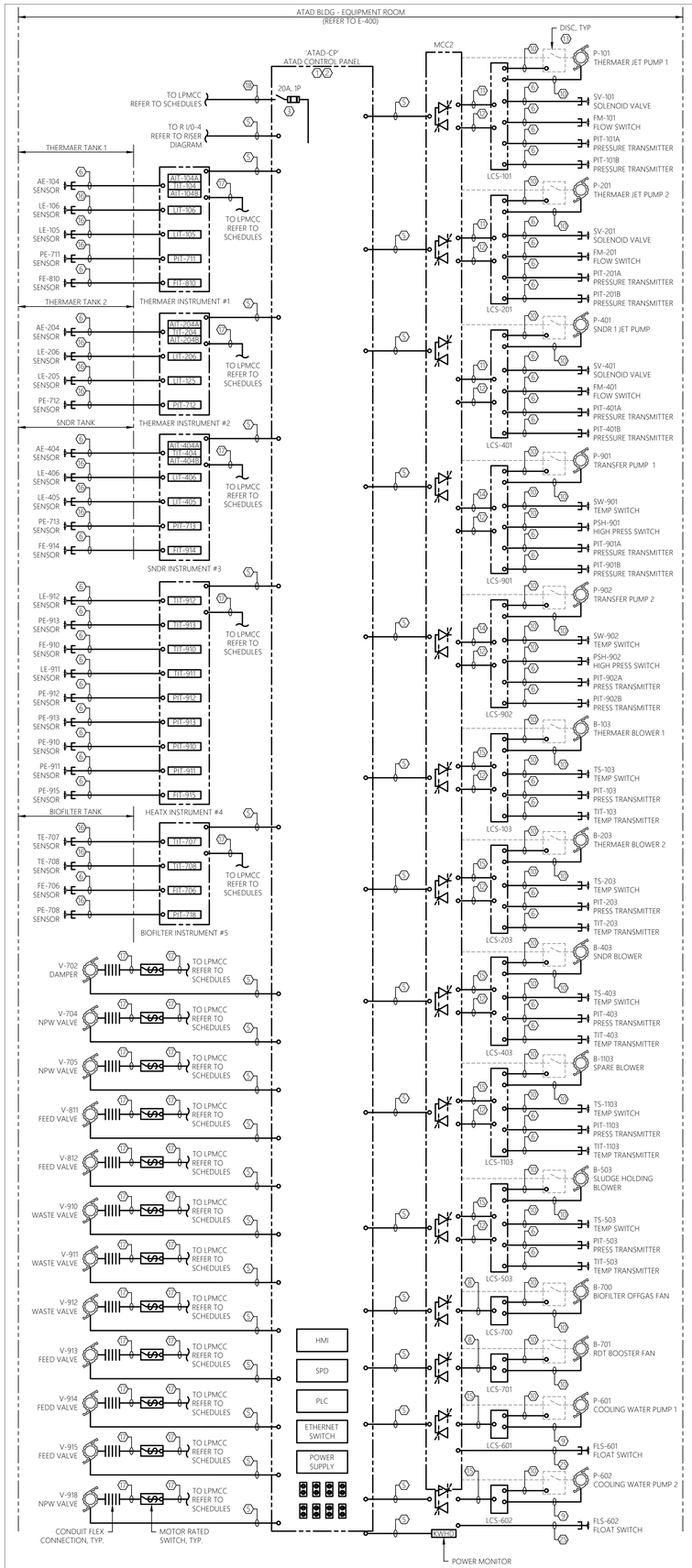

1 E-022 ATAD CONTROL PANEL RISER DIAGRAM
SCALE: NTS — ATAD EQUIPMENT ROOM

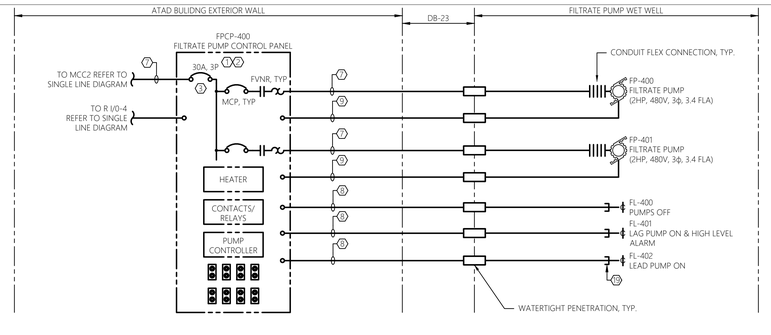

2 E-022 FILTRATE PUMP CONTROL PANEL RISER DIAGRAM
SCALE: NTS — ATAD BUILDING

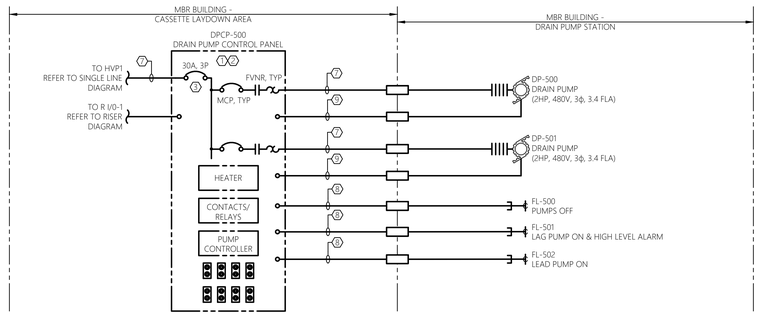

3 E-022 DRAIN PUMP CONTROL PANEL RISER DIAGRAM
SCALE: NTS — MBR BUILDING

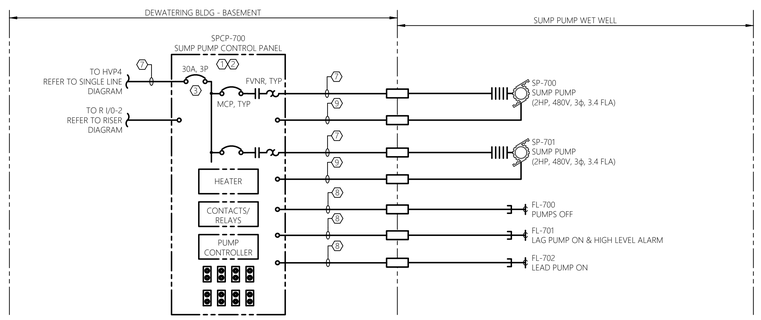

4 E-022 SUMP PUMP CONTROL PANEL RISER DIAGRAM
SCALE: NTS — DEWATERING BUILDING

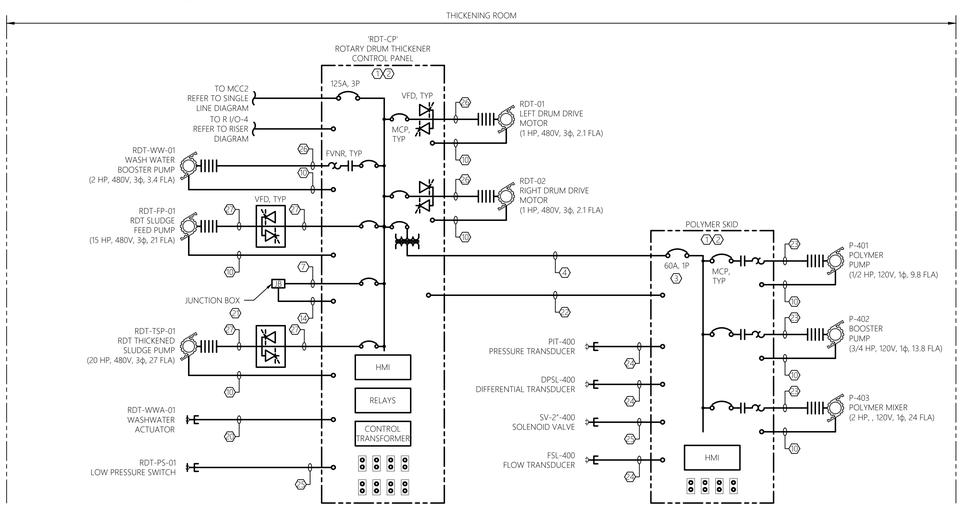

5 E-022 RDT CONTROL PANEL RISER DIAGRAM
SCALE: NTS — RDT ROOM

GENERAL SHEET NOTES:

1. REFER TO E-001 FOR ELECTRICAL LEGENDS, ABBREVIATIONS AND GENERAL PROJECT NOTES.
2. PROVIDE GROUNDING PER NEC FOR ALL ELECTRICAL EQUIPMENT AND ASSOCIATED EQUIPMENT.
3. ALL CONDUCTORS NOT SHOWN FOR CLARITY. COORDINATE WITH ALL PRIME CONTRACTORS AND PROVIDE COMPLETE ELECTRICAL CIRCUITING FOR ALL INSTALLED EQUIPMENT. ALL REQUIREMENTS TO BE PER NEC.
4. REFER TO FLOOR PLANS FOR GENERAL DEVICE/EQUIPMENT LOCATIONS. COORDINATE FINAL LOCATIONS WITH PROCESS MECHANICAL DRAWINGS. REFER TO SITE PLAN FOR DUCT BANK INFORMATION.
5. REFER TO SINGLE LINE DIAGRAMS, SPECIFICATIONS, AND SUBMITTAL DOCUMENTATION FOR ADDITIONAL INFORMATION/REQUIREMENTS.
6. CONTRACTOR TO COORDINATE ALL ASPECTS OF SEQUENCE OF CONSTRUCTION WITH OWNER ALL OTHER TRADE CONTRACTORS.
7. CIRCUITS SHOWN ARE POWER, CONTROL, INSTRUMENTATION, AND CONTROL CIRCUIT POWER. REFER TO SINGLE LINE DIAGRAMS, SCHEDULES, AND DETAILS FOR ADDITIONAL CIRCUITS.
8. ALL WIRING REQUIREMENTS INCLUDING BUT NOT LIMITED TO WIRE SIZE, TYPE, AND QUANTITY OF CONDUCTORS TO BE VERIFIED WITH EQUIPMENT MANUFACTURER.
9. QUANTITY OF CONDUCTORS CALLED FOR MAY INCLUDE SPARE CONDUCTORS. PROVIDE CONDUCTORS SHOWN OR MINIMUM NUMBER REQUIRED PER MANUFACTURERS WRITTEN INSTRUCTIONS. ALL REQUIREMENTS TO BE PER NEC.
10. CONTRACTOR TO PROVIDE ARC FLASH WARNING LABELS FOR ALL NEW OR MODIFIED ELECTRICAL EQUIPMENT. REFER TO SPECIFICATIONS FOR REQUIREMENTS.
11. REFER TO ELECTRICAL DETAIL SHEETS AND SCHEDULE SHEETS FOR ADDITIONAL INFORMATION/REQUIREMENTS.
12. CONTRACTOR TO COORDINATE MOUNTING LOCATIONS OF ALL PANELS WITH OWNER AND ALL OTHER TRADE CONTRACTORS. PROVIDE ALL NECESSARY MOUNTING HARDWARE, BRACKETS, ACCESSORIES, ETC..
13. PROVIDE INTRINSICALLY SAFE BARRIERS AS REQUIRED INTERNAL TO CONTROL PANELS. ALL REQUIREMENTS TO BE PER NEC.
14. NOT ALL REQUIRED CLASSIFIED SPACE WIRING METHODS INCLUDING, BUT NOT LIMITED TO SEAL-OFFS MAY BE SHOWN. PROVIDE WIRING METHODS PER NEC (LATEST EDITION). PROVIDE CONDUIT UNION WITHIN 6" OF EACH SEAL-OFF AT CONTROL PANELS, DISTRIBUTION PANELS, VFDS, STARTERS, DISCONNECTS, OR SOURCE OF SUPPLY WHERE FEASIBLE.
15. NOT ALL REQUIRED THRU-WALL, WATERTIGHT, CONDUIT PENETRATIONS SHOWN FOR CLARITY. CONTRACTOR TO PROVIDE A THRU-WALL, WATERTIGHT, CONDUIT PENETRATION FOR ALL CONDUIT PENETRATIONS WITHIN BUILDING INTERIOR/EXTERIOR WALLS AND FLOORS. REFER TO ELECTRICAL DETAILS FOR ADDITIONAL INFORMATION. COORDINATE WITH OWNER AND ALL OTHER TRADE CONTRACTORS PRIOR TO ROUGH-IN
16. CONTRACTOR TO COORDINATE ALL CONDUIT PENETRATIONS AND CONDUIT ROUTING WITH ALL OTHER TRADE CONTRACTORS AND OWNER PRIOR TO ROUGH-IN.
17. ALL CONDUCTORS TO BE COPPER AND CONTAIN THWN OR XHHW INSULATION.
18. ALL CONTROL/COMMUNICATION WIRING REQUIREMENTS INCLUDING BUT NOT LIMITED TO WIRE SIZE, TYPE, AND QUANTITY OF CONDUCTORS TO BE VERIFIED WITH EQUIPMENT MANUFACTURER.
19. ALL PROPOSED EQUIPMENT LOCATIONS/INSTALLATIONS TO COMPLY WITH NEC ARTICLE 110.26 'SPACES ABOUT ELECTRICAL EQUIPMENT'.

SHEET KEY NOTES:

1. NOT ALL INTERNAL COMPONENTS SHOWN FOR CLARITY. DIAGRAM IS INTENDED TO SHOW ALL REQUIRED FIELD CIRCUITING REQUIRED UNDER THIS CONTRACT. REFERENCE SUBMITTAL DOCUMENTATION FOR ALL PANEL INTERNAL COMPONENTS. CONTRACTOR TO PROVIDE ADDITIONAL INTERNAL CONTACTS AND JUMPERS PER CONTROL PANEL MANUFACTURERS RECOMMENDATIONS FOR AN OVERALL COMPLETE AND OPERABLE SYSTEM.
2. CONTROL PANEL AND ALL INTERNAL COMPONENTS ARE BY THIS CONTRACT. THIS CONTRACT IS RESPONSIBLE FOR ALL FIELD WIRING BETWEEN DEVICES, TERMINATIONS, AND MOUNTING/INSTALLATION OF PANEL AS SHOWN/INDICATED. REFER TO SUBMITTAL DOCUMENTATION AND COORDINATE WITH ALL OTHER TRADE CONTRACTORS TO PROVIDE COMPLETE SYSTEM FIELD CIRCUITRY AND TERMINATIONS AS REQUIRED FOR A COMPLETE AND OPERABLE SYSTEM.
3. DISCONNECT SIZE SHOWN FOR BIDDING PURPOSES ONLY. COORDINATE DISCONNECT SIZE WITH EQUIPMENT MANUFACTURERS RECOMMENDATIONS. COORDINATE CONDUCTOR/CONDUIT SIZE WITH MANUFACTURERS RECOMMENDED DISCONNECT SIZE. ALL REQUIREMENTS TO BE PER NEC.
4. (2)#6 & #10G, 1-1/2"C
5. CAT 6 CABLE, 1"C
6. FACTORY CABLE. THIS CONTRACT RESPONSIBLE FOR ALL TERMINATIONS PER MANUFACTURERS RECOMMENDATIONS. PROVIDE 1" CONDUIT WHERE EXPOSED TO PHYSICAL DAMAGE AND RECOMMENDED BY THE EQUIPMENT MANUFACTURER. CONDUIT SIZE IS LISTED AS MINIMUM, PROVIDE LARGER AS REQUIRED PER MANUFACTURER. COORDINATE FINAL INSTALLATION REQUIREMENTS WITH MANUFACTURER.
7. (3)#10 & #10G, 1"C.
8. (4)#14, 3/4"C.
9. (6)#14, 3/4"C. CIRCUIT TO BE UTILIZED FOR THE ASSOCIATED MOTOR THERMAL SAFETY AND SEAL LEAK SWITCH. CIRCUIT TO CONTROL TERMINALS OF PROPOSED VFD. IN THE EVENT OF A MOTOR HIGH TEMPERATURE OR SEAL LEAKAGE, THE UNIT IS TO BE SHUT DOWN TO PREVENT DAMAGE. NOTE, TWO CONDUCTORS TO BE UTILIZED AS SPARES.
10. (4)#14, 3/4"C. CIRCUIT TO BE UTILIZED FOR THE ASSOCIATED MOTOR THERMAL SAFETY SWITCH. CIRCUIT TO CONTROL TERMINALS OF PROPOSED VFD. IN THE EVENT OF A MOTOR HIGH TEMPERATURE, THE UNIT IS TO BE SHUT DOWN TO PREVENT DAMAGE. NOTE, TWO CONDUCTORS TO BE UTILIZED AS SPARES.
11. (10)#14, 1"C
12. (3)#18STP, 3/4"C
13. REFER TO SINGLE LINE DIAGRAM SHEET E-015 FOR POWER AND DISCONNECT INFORMATION/DETAILS.
14. (12)#14, 1"C
15. (8)#14, 1"C
16. (1)#18STP, 3/4"C
17. (2)#12 & #12G, 3/4"C.
18. (2)#10 & #10G, 1"C.
19. PROVIDE CONDUIT BUSHING, FITTING, OR FLEX CONNECTION AS REQUIRED FOR PROPER CONNECTION OF DEVICE. ALL BUSHINGS, FITTINGS, OR FLEX CONNECTIONS TO BE SUITED FOR ENVIRONMENT INSTALLED WITHIN. COORDINATE WITH OTHER TRADE CONTRACTORS AND EQUIPMENT MANUFACTURER. FLEX CONNECTIONS TO BE MINIMIZED TO THE GREATEST EXTENT POSSIBLE. TYPICAL.
20. (8)#14, 3/4"C.
21. JUNCTION BOX BY EQUIPMENT MANUFACTURER. COORDINATE FINAL LOCATION WITH EQUIPMENT MANUFACTURER. JUNCTION BOX FACTORY WIRED TO RDT SYSTEM CONTROL INSTRUMENTATION/DEVICES. THIS CONTRACT RESPONSIBLE FOR PROVIDING CIRCUITRY (CONDUIT & CONDUCTORS) AND TERMINATIONS AS SHOWN/SPECIFIED AS A MINIMUM. PROVIDE ADDITIONAL CIRCUITRY AS REQUIRED PER MANUFACTURERS RECOMMENDATIONS. REFER TO SUBMITTAL DOCUMENTATION FOR ADDITIONAL INFORMATION AND COORDINATE FINAL REQUIREMENTS WITH EQUIPMENT MANUFACTURER. REFER TO FLOOR PLAN FOR GENERAL LOCATION.
22. (10)#14, (2)#18STP, 1"C
23. (3)#12 & #12G, 3/4"C
24. (2)#18STP, 3/4"C.
25. (4)#14, 3/4"C
26. (3)#10 & #10G, 3/4"C. PROVIDE AS VFD SHIELDED CABLE. CONDUIT SIZE IS LISTED AS MINIMUM, PROVIDE LARGER DIAMETER AS REQUIRED PER MANUFACTURER. REFER TO SPECIFICATIONS FOR ADDITIONAL INFORMATION. ALL REQUIREMENTS TO BE PER NEC.
27. (3)#8 & #10G, 3/4"C. PROVIDE AS VFD SHIELDED CABLE. CONDUIT SIZE IS LISTED AS MINIMUM, PROVIDE LARGER DIAMETER AS REQUIRED PER MANUFACTURER. REFER TO SPECIFICATIONS FOR ADDITIONAL INFORMATION. ALL REQUIREMENTS TO BE PER NEC.

CONTROL DIAGRAMS ARE SCHEMATIC IN NATURE AND SHOWS ALL INTERCONNECTIONS. CONTRACTOR MAY GROUP POWER CIRCUITS INTO LARGER CONDUIT AND GROUP CONTROL CIRCUITS INTO SEPARATE LARGER CONDUIT. GROUPING OF CIRCUITS INTO LARGER CONDUITS MUST COMPLY WITH NEC FILL AND DERATING REQUIREMENTS. VFD INPUT & OUTPUT CONDUCTORS MUST BE RUN INDEPENDENT OF OTHER CONDUCTORS.

MHE ENGINEERING
33 Airport Center Drive, Suite 202
New Windsor, NY 12553
(845) 567-3100
111 Wheatfield Drive, Suite 1
Milford, PA 18337
(570) 296-2765

BID ADDENDUM

JADE STONE ENGINEERING

STATE OF NEW YORK · JEFFREY E. ROBINSON · 095896 · LICENSED PROFESSIONAL ENGINEER

HAZARDOUS MATERIAL NOTE:
THE SERVICES PROVIDED BY MHE, INCLUDING ALL WORK DEPICTED ON MHE PLANS, DO NOT INCLUDE SERVICES RELATED TO THE IDENTIFICATION, CONTROLS OR HANDLING OF HAZARDOUS MATERIALS, INCLUDING SUCH MATERIALS AS ASBESTOS AND LEAD PAINT. ALL TESTING, IDENTIFICATION, ABATEMENT, CONTROLS, AND HANDLING OF HAZARDOUS MATERIALS SHALL BE UNDERTAKEN BY A HAZARDOUS MATERIAL CONSULTANT AND CERTIFIED PROFESSIONALS. IF SUCH MATERIALS HAVE BEEN IDENTIFIED, CONTRACTOR WILL COMMUNICATE DIRECTLY WITH HAZARDOUS MATERIAL PROFESSIONAL FOR THE PERFORMANCE OF ANY WORK ON OR ADJACENT TO SAID MATERIALS. IF UNIDENTIFIED MATERIALS OF CONCERN ARE ENCOUNTERED WHILE UNDERTAKING THE WORK SHOWN HEREON, CONTRACTOR SHALL IMMEDIATELY NOTIFY ENGINEER AND OWNER, AND SHALL OBTAIN DIRECTION FROM THE HAZARDOUS MATERIAL CONSULTANT PRIOR TO THE CONTINUATION OF WORK INVOLVING SUSPECTED MATERIAL.

UDIG·NY SAFE DIGGING STARTS HERE
CALL 811

UNAUTHORIZED ADDITION OR ALTERATION OF THIS PLAN IS A VIOLATION OF SECTION 7209(2) OF THE NEW YORK STATE EDUCATION LAW.

ALL PRODUCTION & INTELLECTUAL PROPERTY RIGHT RESERVED ©

CAESARS LANE WWTP EXPANSION PROJECT: PHASE 2
145 CAESARS LN.
NEW WINDSOR, NY 12553
FOR TOWN OF NEW WINDSOR
555 UNION AVE.
NEW WINDSOR, NY 12553

ELECTRICAL RISER DIAGRAMS

REVISIONS

NO.	DESCRIPTION	DATE

ISSUED DATE:	06 JUNE, 2025
DESIGN BY:	RRM
DRAWN BY:	CDJ
CHECKED BY:	MGR
REVIEWED BY:	JER

SHEET NO.
E-022

PROJECT # 18-732 PHASE #

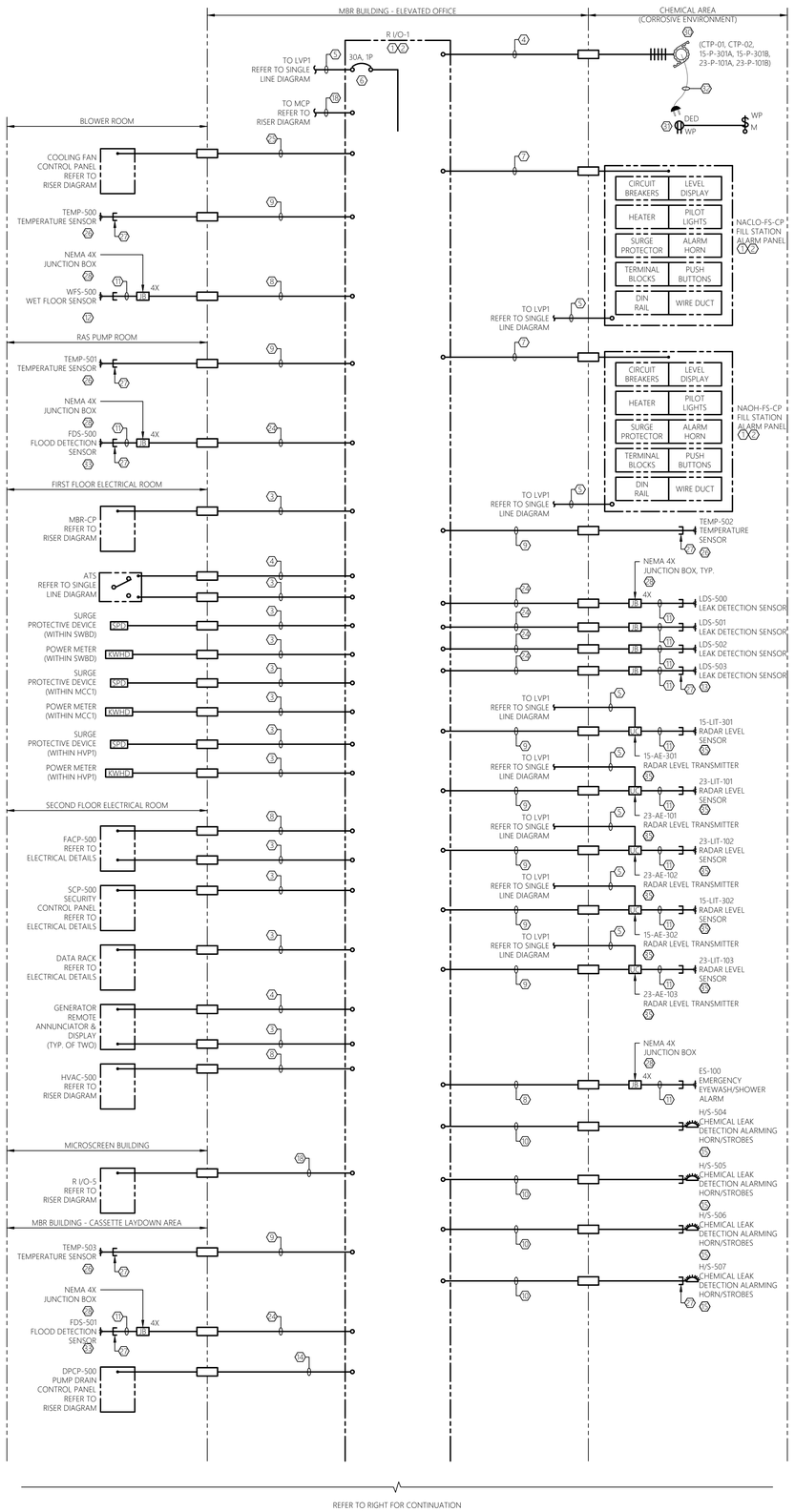

1 E-023 REMOTE I/O PANEL #1 RISER DIAGRAM
SCALE: NTS
MBR BUILDING

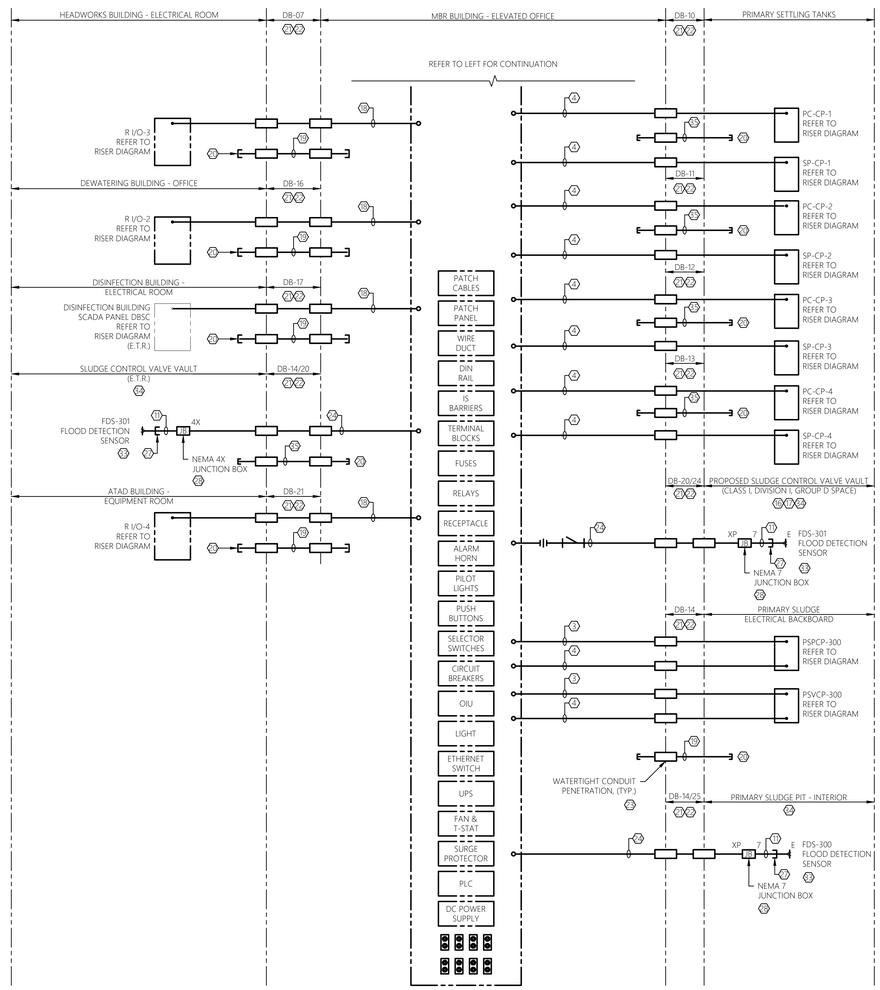

CONTROL DIAGRAMS ARE SCHEMATIC IN NATURE AND SHOWS ALL INTERCONNECTIONS. CONTRACTOR MAY GROUP POWER CIRCUITS INTO LARGER CONDUIT AND GROUP CONTROL CIRCUITS INTO SEPARATE LARGER CONDUIT. GROUPING OF CIRCUITS INTO LARGER CONDUITS MUST COMPLY WITH NEC FILL AND DERATING REQUIREMENTS. VFD INPUT & OUTPUT CONDUCTORS MUST BE RUN INDEPENDENT OF OTHER CONDUCTORS.

GENERAL SHEET NOTES:

1. REFER TO E-001 FOR ELECTRICAL LEGENDS, ABBREVIATIONS AND GENERAL PROJECT NOTES.
2. PROVIDE GROUNDING PER NEC FOR ALL ELECTRICAL EQUIPMENT AND ASSOCIATED EQUIPMENT.
3. ALL CONDUCTORS, EQUIPMENT, COMPONENTS, AND DEVICES NOT SHOWN FOR CLARITY. COORDINATE WITH ALL PRIME CONTRACTORS AND PROVIDE COMPLETE ELECTRICAL CIRCUITING FOR ALL INSTALLED EQUIPMENT. ALL REQUIREMENTS TO BE PER NEC.
4. REFER TO ELECTRICAL PLANS FOR GENERAL DEVICE/EQUIPMENT LOCATIONS. COORDINATE FINAL LOCATIONS WITH ALL PRIME CONTRACT DRAWINGS. REFER TO ELECTRICAL SITE PLAN FOR DUCT BANK INFORMATION
5. REFER TO SINGLE LINE DIAGRAMS, SPECIFICATIONS, AND SUBMITTAL DOCUMENTATION FOR ADDITIONAL INFORMATION/REQUIREMENTS.
6. CONTRACTOR TO COORDINATE ALL ASPECTS OF SEQUENCE OF CONSTRUCTION WITH OWNER AND ALL OTHER TRADE CONTRACTORS.
7. CIRCUITS SHOWN ARE POWER, CONTROL, INSTRUMENTATION, AND CONTROL CIRCUIT POWER. REFER TO SINGLE LINE DIAGRAMS, SCHEDULES, AND DETAILS FOR ADDITIONAL CIRCUITS.
8. ALL WIRING REQUIREMENTS INCLUDING BUT NOT LIMITED TO WIRE SIZE, TYPE, AND QUANTITY OF CONDUCTORS TO BE VERIFIED WITH EQUIPMENT MANUFACTURER.
9. QUANTITY OF CONDUCTORS CALLED FOR MAY INCLUDE SPARE CONDUCTORS. PROVIDE CONDUCTORS SHOWN OR MINIMUM NUMBER REQUIRED PER MANUFACTURERS WRITTEN INSTRUCTIONS. ALL REQUIREMENTS TO BE PER NEC.
10. CONTRACTOR TO PROVIDE ARC FLASH WARNING LABELS FOR ALL NEW OR MODIFIED ELECTRICAL EQUIPMENT. REFER TO SPECIFICATIONS FOR REQUIREMENTS.
11. REFER TO ELECTRICAL DETAIL SHEETS AND SCHEDULE SHEETS FOR ADDITIONAL INFORMATION/REQUIREMENTS.
12. CONTRACTOR TO COORDINATE MOUNTING LOCATIONS OF ALL PANELS WITH OWNER AND ALL OTHER TRADE CONTRACTORS. PROVIDE ALL NECESSARY MOUNTING HARDWARE, BRACKETS, ACCESSORIES, ETC...
13. PROVIDE INTRINSICALLY SAFE BARRIERS AS REQUIRED INTERNAL TO CONTROL PANELS. ALL REQUIREMENTS TO BE PER NEC.
14. NOT ALL REQUIRED CLASSIFIED SPACE WIRING METHODS INCLUDING, BUT NOT LIMITED TO SEAL-OFFS MAY BE SHOWN. PROVIDE WIRING METHODS PER NEC (LATEST EDITION). PROVIDE CONDUIT UNION WITHIN 6" OF EACH SEAL-OFF AT CONTROL PANELS, DISTRIBUTION PANELS, VFDS, STARTERS, DISCONNECTS, OR SOURCE OF SUPPLY WHERE FEASIBLE
15. NOT ALL REQUIRED THRU-WALL, WATERTIGHT, CONDUIT PENETRATIONS SHOWN FOR CLARITY. CONTRACTOR TO PROVIDE A THRU-WALL, WATERTIGHT, CONDUIT PENETRATION FOR ALL CONDUIT PENETRATIONS WITHIN BUILDING INTERIOR/EXTERIOR WALLS AND FLOORS. REFER TO ELECTRICAL DETAILS FOR ADDITIONAL INFORMATION. COORDINATE WITH OWNER AND ALL OTHER TRADE CONTRACTORS PRIOR TO ROUGH-IN
16. CONTRACTOR TO COORDINATE ALL CONDUIT PENETRATIONS AND CONDUIT ROUTING WITH ALL OTHER TRADE CONTRACTORS AND OWNER PRIOR TO ROUGH-IN.
17. ALL CONDUCTORS TO BE COPPER AND CONTAIN XHHW-2 INSULATION.
18. ALL PROPOSED EQUIPMENT LOCATIONS/INSTALLATIONS TO COMPLY WITH NEC ARTICLE 110.26 'SPACES ABOUT ELECTRICAL EQUIPMENT'.

SHEET KEY NOTES:

1. CONTROL PANEL AND ALL INTERNAL COMPONENTS TO BE FURNISHED BY CONTRACTOR THRU BID ALLOWANCE #1. THIS CONTRACT IS RESPONSIBLE FOR ALL FIELD WIRING BETWEEN DEVICES, AND MOUNTING/INSTALLATION/WIRING OF PANEL AS SHOWN/INDICATED. REFER TO SUBMITTAL DOCUMENTATION AND COORDINATE WITH OWNER AND ENGINEER TO PROVIDE COMPLETE SYSTEM FIELD CIRCUITRY AND TERMINATIONS AS REQUIRED FOR A COMPLETE AND OPERABLE SYSTEM.
2. NOT ALL INTERNAL COMPONENTS SHOWN FOR CLARITY. DIAGRAM IS INTENDED TO SHOW ALL REQUIRED FIELD CIRCUITING REQUIRED UNDER THIS CONTRACT. REFERENCE SUBMITTAL DOCUMENTATION AND SPECIFICATION SECTION 260912 CONTROL PANELS AND INTEGRATION FOR ALL PANEL INTERNAL COMPONENTS.
3. (1) CAT 6A PREMIUM ETHERNET CABLE, 1"C. PROVIDE AS PLENUM RATED WITH 4 BONDED PAIRS. TO BE BELDEN #3633 OR APPROVED EQUAL.
4. (12)#14 & (2)#18STP, 1"C.
5. (2)#10 & #10G, 1"C.
6. DISCONNECT SIZE SHOWN FOR BIDDING PURPOSES ONLY. COORDINATE DISCONNECT SIZE WITH EQUIPMENT MANUFACTURERS RECOMMENDATIONS. COORDINATE CONDUCTOR/CONDUIT SIZE WITH MANUFACTURERS RECOMMENDED DISCONNECT SIZE. ALL REQUIREMENTS TO BE PER NEC..
7. (24)#14 & (4)#18STP, 1-1/2"C.
8. (4)#14, 1"C
9. (2)#18STP, 1"C
10. (12)#14, 1"C
11. FACTORY CABLE. THIS CONTRACT RESPONSIBLE FOR ALL TERMINATIONS PER MANUFACTURERS RECOMMENDATIONS. PROVIDE 1" CONDUIT WHERE EXPOSED TO PHYSICAL DAMAGE AND RECOMMENDED BY THE EQUIPMENT MANUFACTURER. CONDUIT SIZE IS LISTED AS MINIMUM, PROVIDE LARGER AS REQUIRED PER MANUFACTURER. COORDINATE FINAL INSTALLATION REQUIREMENTS WITH MANUFACTURER.
12. WET FLOOR SENSOR TO BE PROVIDED AS PART OF BID ALLOWANCE #1. PROVIDE AS WINLAND ELECTRONICS, WATERBUG WB200, OR APPROVED EQUAL.
13. LEAK DETECTION SENSOR TO BE PROVIDED AS PAINTEK CLS200 CAPACITANCE PROBE AS MANUFACTURED BY SIEMENS, OR APPROVED EQUAL THRU BID ALLOWANCE #1. PROVIDE ALL REQUIRED MOUNTING HARDWARE, BRACKETTS, ACCESSORIES, ETC... AND CIRCUITRY (CONDUIT AND CONDUCTORS) FOR AN OVERALL COMPLETE AND OPERABLE LEAK DETECTION SYSTEM. REFER TO SPECIFICATION SECTION 260912 CONTROL PANELS AND INTEGRATION FOR ADDITIONAL INFORMATION/REQUIREMENTS. PROVIDE LABEL PER SPECIFICATION SECTION 260553 IDENTIFICATION FOR ELECTRICAL SYSTEMS.
14. (6)#14, 3/4"C.
15. CHEMICAL LEAK DETECTION ALARMING LIGHTS AND HORNS (HORN/STROBE) TO BE PROVIDED AS FEDERAL SIGNAL GLOBAL SERIES CUSTOM CONFIGURED FIXTURES MODEL #C-MSC-3A-120-NN-LG-SR OR APPROVED EQUAL THRU BID ALLOWANCE #1. TO BE 3 POSITION VERTICAL STACK, SOUNDER HORN, GREEN 'OK' LED LIGHT, & RED 'LEAK DETECTED' LED LIGHT), RATED NEMA 4X, AND POWERED BY 120V AC CONTACT CLOSURES WITHIN CONTROL PANEL. PROVIDE ALL REQUIRED POWER SUPPLIES, CONTROL TRANSFORMERS, AND RELAYS, AS WELL AS, DOME GUARDS TO PROTECT LED LIGHTS FROM PHYSICAL DAMAGE, CONDUIT ADAPTORS, INDICATOR RINGS AND LEGEND PLATE KITS AS NECESSARY. PROVIDE ALL REQUIRED MOUNTING HARDWARE, BRACKETTS, ACCESSORIES, ETC... AND CIRCUITRY (CONDUIT AND CONDUCTORS) FOR AN OVERALL COMPLETE AND OPERABLE LEAK DETECTION SYSTEM. REFER TO SPECIFICATION SECTION 260912 CONTROL PANELS AND INTEGRATION FOR ADDITIONAL INFORMATION/REQUIREMENTS. PROVIDE LABEL PER SPECIFICATION SECTION 260553 IDENTIFICATION FOR ELECTRICAL SYSTEMS.
16. AREA IS A CLASS I, DIVISION I, GROUP D SPACE. ALL WIRING METHODS WITHIN THIS SPACE TO COMPLY WITH NEC ARTICLE 501. ALL ELECTRICAL EQUIPMENT AND DEVICES WITHIN THIS SPACE TO BE EXPLOSION PROOF RATED FOR USE IN A CLASS I, DIVISION I, GROUP D ENVIRONMENT. NOTE, NOT ALL REQUIRED SEAL-OFFS SHOWN FOR CLARITY. PROVIDE PER NEC.
17. ALL ELECTRICAL EQUIPMENT, COMPONENTS, DEVICES, AND RACEWAY SYSTEMS TO BE KEPT OUT OF CLASSIFIED AREAS TO GREATEST EXTENT POSSIBLE.
18. 8-STRAND, MULTI-MODE (50 MICRON CORE / 125 MICRON CLADDING DIAMETER), FIBER OPTIC CABLE, 4"C. PROVIDE MAXCELL FABRIC INNERDUCT WITHIN 4" CONDUIT. PROVIDE AS MAXCELL 4" 3-CELL PRODUCT. INSTALL PROPOSED FIBER OPTIC CABLE WITHIN 1-CELL OF THE PROPOSED INNERDUCT AND A PULL STRING THROUGH THE OTHER TWO (2) CELLS. FIBER OPTIC CABLE TO BE CONTINUOUS (NO SPLICE) AND SUITABLE FOR INDOOR/OUTDOOR APPLICATIONS ALONG WITH SUITABLE FOR DIRECT BURIAL APPLICATIONS. FIBER OPTIC CABLE TO BE MODEL CLEARCURVE AS MANUFACTURED BY CORNING OR APPROVED EQUAL. SUBMIT PRODUCT DATA TO ENGINEER FOR REVIEW DURING SUBMITTAL PHASE. REFER TO SPECIFICATIONS FOR ADDITIONAL INFORMATION/REQUIREMENTS.
19. SPARE 4"C.
20. PROVIDE SPARE CONDUIT AS SHOWN. STUB CONDUIT ADJACENT TO EQUIPMENT, OR AS DIRECTED BY THE OWNER. PROVIDE PULL ROPE AND CAP BOTH ENDS. CONTRACTOR TO PROVIDE LABEL FOR ALL SPARE CONDUITS INDICATING CONDUIT DESTINATION. REFER TO SPECIFICATIONS FOR ADDITIONAL INFORMATION/REQUIREMENTS.
21. CONTRACTOR RESPONSIBLE TO RESTORE ALL DISTURBED SURFACES AS PART OF THIS CONTRACT. COORDINATE FINAL REQUIREMENTS WITH THE OWNER AND ENGINEER. REFER TO TYPICAL DUCT BANK SECTION DETAILS FOR ADDITIONAL INFORMATION/REQUIREMENTS.
22. CONTRACTOR TO COORDINATE FINAL DUCT BANK ROUTING/REQUIREMENTS WITH EXISTING FIELD CONDITIONS, PROPOSED WORK, OWNER AND ENGINEER PRIOR TO ROUGH-IN TO AVOID CONFLICTS.
23. REFER TO ELECTRICAL DETAILS FOR ADDITIONAL INFORMATION/REQUIREMENTS. CLOSELY COORDINATE FINAL PENETRATION LOCATIONS/REQUIREMENTS WITH APPLICABLE CONTRACTOR, OWNER, AND ENGINEER. TYPICAL.
24. (2)#18STP & (4)#14, 1"C
25. (64)#14, 1-1/2"C.
26. TEMPERATURE SENSOR TO BE PROVIDED AS OMEGA EWS-TX SERIES WALL MOUNT SENSOR, OR APPROVED EQUAL THRU BID ALLOWANCE #1. PROVIDE ELECTRICAL BOX, 24V DC POWER SUPPLY, CIRCUITRY (CONDUIT AND CONDUCTORS), WALL PLATE, AND MOUNTING BRACKETS AS REQUIRED FOR AN OVERALL COMPLETE AND OPERABLE ROOM TEMPERATURE SENSING DEVICE PER MANUFACTURER'S RECOMMENDATIONS. REFER TO SPECIFICATION SECTION 260912 CONTROL PANELS AND INTEGRATION FOR ADDITIONAL INFORMATION/REQUIREMENTS. PROVIDE LABEL PER SPECIFICATION SECTION 260553 IDENTIFICATION FOR ELECTRICAL SYSTEMS.
27. PROVIDE CONDUIT BUSHING, FITTING, OR FLEX CONNECTION AS REQUIRED FOR PROPER CONNECTION OF DEVICE. ALL BUSHINGS, FITTINGS, OR FLEX CONNECTIONS TO BE SUITED FOR ENVIRONMENT INSTALLED WITHIN, INCLUDING BUT NOT LIMITED TO, HAZARDOUS ENVIRONMENTS, CORROSIVE ENVIRONMENTS, AND OUTDOOR INSTALLATIONS. COORDINATE WITH APPLICABLE CONTRACTOR AND EQUIPMENT MANUFACTURER. FLEX CONNECTION LENGTHS TO BE MINIMIZED TO GREATEST EXTENT POSSIBLE. TYPICAL.
28. CONTRACTOR TO PROVIDE JUNCTION/PULL BOXES FOR SPLICING, OR EXTENDING CIRCUITRY AS REQUIRED. PROVIDE NECESSARY TERMINAL STRIPS, OR SPLICE KITS WITHIN JUNCTION BOX TO EXTEND CIRCUITRY AS SHOWN. (NOTE, JUNCTION BOXES ARE NOT ALWAYS SHOWN ON FLOOR PLANS. CONTRACTOR TO FIELD LOCATE AS NECESSARY). JUNCTION BOXES ARE TO BE RATED FOR ENVIRONMENT INSTALLED, INCLUDING BUT NOT LIMITED TO HAZARDOUS ENVIRONMENTS, CORROSIVE ENVIRONMENTS, AND OUTDOOR INSTALLATIONS. CONTRACTOR TO FIELD VERIFY AND COORDINATE CONDUIT ARRANGEMENT ENTERING/LEAVING JUNCTION BOX AS REQUIRED. CONTRACTOR TO SIZE JUNCTION BOXES PER NEC ARTICLE 314. JUNCTION BOXES TO BE MANUFACTURED BY EATON, OR APPROVED EQUAL. TYPICAL OF ALL JUNCTION BOXES SHOWN ON THIS DRAWING.
29. FLOAT SWITCH TO BE PROVIDED AS SJE RHOMBUS MILI-AMP-MASTER, OR APPROVED EQUAL THRU BID ALLOWANCE #1. PROVIDE REQUIRED MOUNTING HARDWARE, BRACKETS, ACCESSORIES, ETC... AND CIRCUITRY (CONDUIT AND CONDUCTORS) FOR AN OVERALL COMPLETE AND OPERABLE FLOAT SWITCH SYSTEM. REFER TO SPECIFICATIONS SECTION 260912 CONTROL PANELS AND INTEGRATION FOR ADDITIONAL INFORMATION/REQUIREMENTS. PROVIDE LABEL PER SPECIFICATION SECTION 260553 IDENTIFICATION FOR ELECTRICAL SYSTEMS.
30. ROOM INTERIOR IS A CORROSIVE ENVIRONMENT. ALL WIRING METHODS, EQUIPMENT, AND DEVICES WITHIN THIS SPACE ARE TO BE OF CORROSION RESISTANT MATERIALS/METHODS. ALL RACEWAY TO BE PVC COATED RGS BY PLASTI-BOND, OR APPROVED EQUAL. ALL MOUNTING HARDWARE, BRACKETS, SUPPORTS, CHANNELS, FITTINGS, CLAMPS, ETC... TO BE A CORROSION RESISTANT PRODUCT LINE AS MANUFACTURED BY POWER-STRUT DEFENDER, OR APPROVED EQUAL. SUBMIT PRODUCT DATA TO ENGINEER DURING SUBMITTAL PHASE FOR APPROVAL. REFER TO RACEWAY SCHEDULE FOR ADDITIONAL INFORMATION. UTILIZE NEMA 4X (NON-METALLIC) ENCLOSURES FOR ALL ELECTRICAL EQUIPMENT, SWITCHES, RECEPTACLES, DISCONNECTS, BOXES, ETC...
31. CONTRACTOR TO PROVIDE 125-VOLT, 2-POLE, 3-WIRE, 20-AMP, HEAVY DUTY, DUPLEX WEATHERPROOF RECEPTACLE EQUIPPED WITH INTEGRAL GROUND FAULT CIRCUIT INTERRUPTER (GFI) MOUNTED ADJACENT TO EQUIPMENT. PROVIDE ALL REQUIRED MOUNTING HARDWARE, BRACKETS, ACCESSORIES, ETC... PROVIDE DEDICATED CIRCUIT FROM PROPOSED PANEL 'LVP1'. PROVIDE AS SWITCHED RECEPTACLE.
32. EQUIPMENT WHIP (CORD) AND PLUG PROVIDED BY EQUIPMENT MANUFACTURER. CONTRACTOR TO SUBSTITUTE HARD WIRED CONNECTION IN LIEU OF RECEPTACLE (CORD & PLUG) PER MANUFACTURERS RECOMMENDATIONS. COORDINATE FINAL REQUIREMENTS WITH EQUIPMENT MANUFACTURER, OWNER, AND ENGINEER. REFER TO EQUIPMENT CONNECTION SCHEDULE FOR ADDITIONAL INFORMATION/REQUIREMENTS.
33. FLOOD DETECTION SENSOR TO BE PROVIDED AS PAINTEK CLS200 CAPACITANCE PROBE AS MANUFACTURED BY SIEMENS, OR APPROVED EQUAL THRU BID ALLOWANCE #1. PROVIDE ALL REQUIRED MOUNTING HARDWARE, BRACKETTS, ACCESSORIES, ETC... AND CIRCUITRY (CONDUIT AND CONDUCTORS) FOR AN OVERALL COMPLETE AND OPERABLE FLOOD DETECTION SYSTEM. REFER TO SPECIFICATION SECTION 260912 CONTROL PANELS AND INTEGRATION FOR ADDITIONAL INFORMATION/REQUIREMENTS. PROVIDE LABEL PER SPECIFICATION SECTION 260553 IDENTIFICATION FOR ELECTRICAL SYSTEMS.
34. ROUTING AND ATTACHMENT METHODS OF ALL CONDUITS WITHIN STRUCTURE ARE TO BE CLOSELY COORDINATED WITH APPLICABLE CONTRACTOR, OWNER, AND ENGINEER TO AVOID CONFLICTS. ALL RACEWAY TO BE PVC COATED RGS BY PLASTI-BOND, OR APPROVED EQUAL. ALL MOUNTING HARDWARE, BRACKETS, SUPPORTS, CHANNELS, FITTINGS, CLAMPS, ETC... TO BE A CORROSION RESISTANT PRODUCT LINE AS MANUFACTURED BY POWER-STRUT DEFENDER, OR APPROVED EQUAL. SUBMIT PRODUCT DATA TO ENGINEER DURING SUBMITTAL PHASE FOR APPROVAL. REFER TO RACEWAY SCHEDULE FOR ADDITIONAL INFORMATION.
35. SPARE 2"C.

MHE ENGINEERING
33 Airport Center Drive, Suite 202
New Windsor, NY 12553
(845) 567-3100
111 Wheatfield Drive, Suite 1
Milford, PA 18337
(570) 296-2765

BID ADDENDUM

JADE STONE ENGINEERING

STATE OF NEW YORK · JEFFREY E. ROBINSON · 095896 · LICENSED PROFESSIONAL ENGINEER

HAZARDOUS MATERIAL NOTE:

THE SERVICES PROVIDED BY MHE, INCLUDING ALL WORK DEPICTED ON MHE PLANS, DO NOT INCLUDE SERVICES RELATED TO THE IDENTIFICATION, CONTROLS OR HANDLING OF HAZARDOUS MATERIALS, INCLUDING SUCH MATERIALS AS ASBESTOS AND LEAD PAINT. ALL TESTING, IDENTIFICATION, ABATEMENT, CONTROLS, AND HANDLING OF HAZARDOUS MATERIALS SHALL BE UNDERTAKEN BY A HAZARDOUS MATERIAL CONSULTANT AND CERTIFIED PROFESSIONALS. IF SUCH MATERIALS HAVE BEEN IDENTIFIED, CONTRACTOR WILL COMMUNICATE DIRECTLY WITH HAZARDOUS MATERIAL PROFESSIONAL FOR THE PERFORMANCE OF ANY WORK ON OR ADJACENT TO SAID MATERIALS. IF UNIDENTIFIED MATERIALS OF CONCERN ARE ENCOUNTERED WHILE UNDERTAKING THE WORK SHOWN HEREON, CONTRACTOR SHALL IMMEDIATELY NOTIFY ENGINEER AND OWNER, AND SHALL OBTAIN DIRECTION FROM THE HAZARDOUS MATERIAL CONSULTANT PRIOR TO THE CONTINUATION OF WORK INVOLVING SUSPECTED MATERIAL.

UDIG·NY SAFE DIGGING STARTS HERE
CALL 811

UNAUTHORIZED ADDITION OR ALTERATION OF THIS PLAN IS A VIOLATION OF SECTION 7209(2) OF THE NEW YORK STATE EDUCATION LAW.

ALL PRODUCTION & INTELLECTUAL PROPERTY RIGHT RESERVED ©

CAESARS LANE WWTP EXPANSION PROJECT: PHASE 2
145 CAESARS LN.
NEW WINDSOR, NY 12553
FOR TOWN OF NEW WINDSOR
555 UNION AVE.
NEW WINDSOR, NY 12553

ELECTRICAL RISER DIAGRAMS

REVISIONS

NO.	DESCRIPTION	DATE

ISSUED DATE:	06 JUNE, 2025
DESIGN BY:	RRM
DRAWN BY:	CDJ
CHECKED BY:	MGR
REVIEWED BY:	JER

SHEET NO.
E-023

PROJECT # 18-732 PHASE #

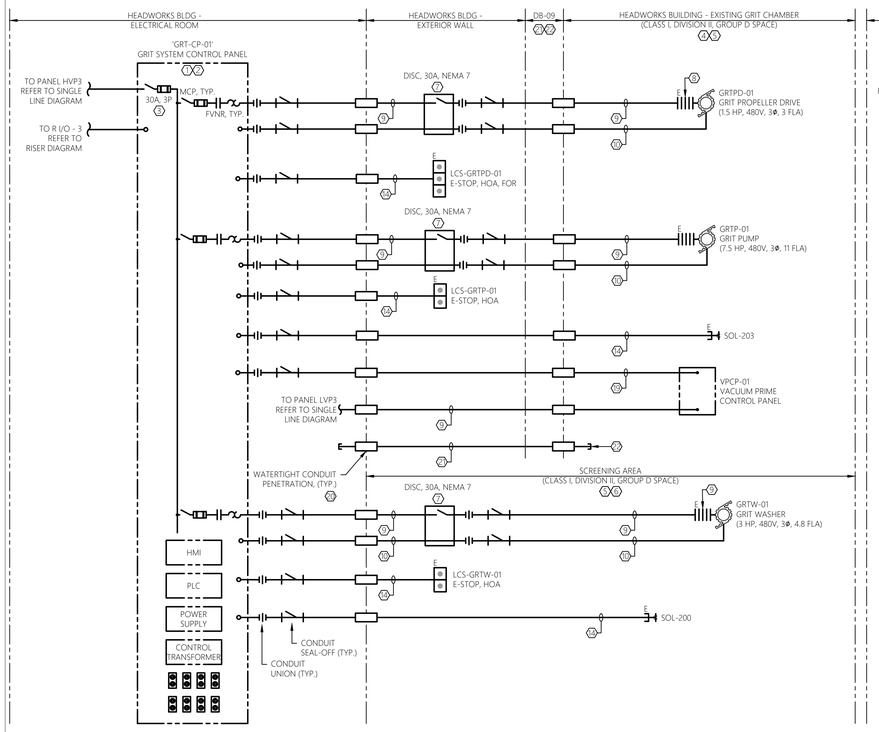

1 E-024 GRIT SYSTEM CONTROL PANEL RISER DIAGRAM
SCALE: NTS — HEADWORKS BUILDING

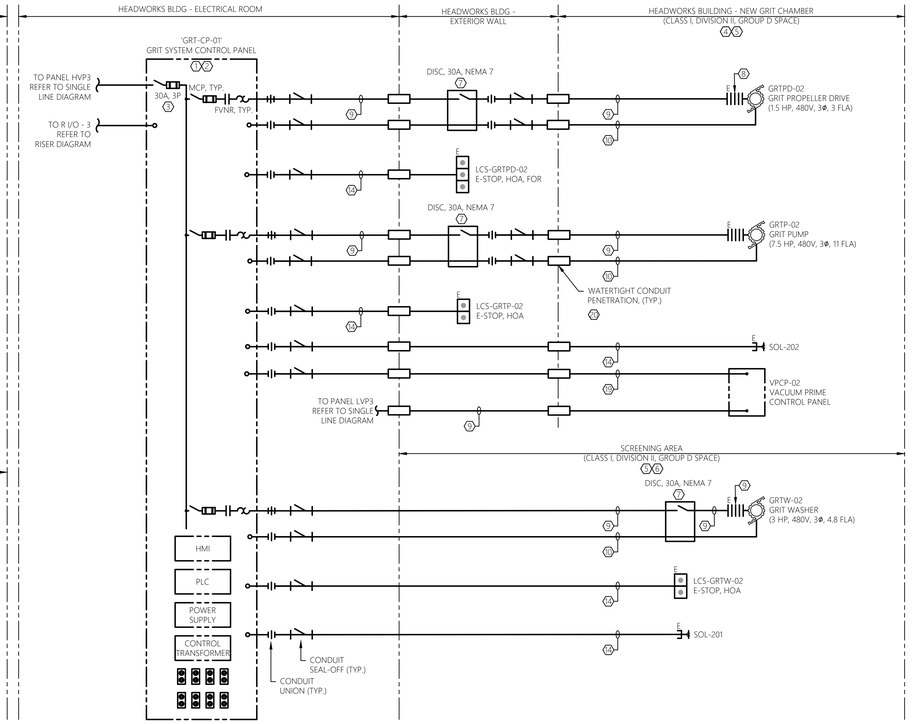

2 E-024 GRIT SYSTEM CONTROL PANEL RISER DIAGRAM
SCALE: NTS — HEADWORKS BUILDING

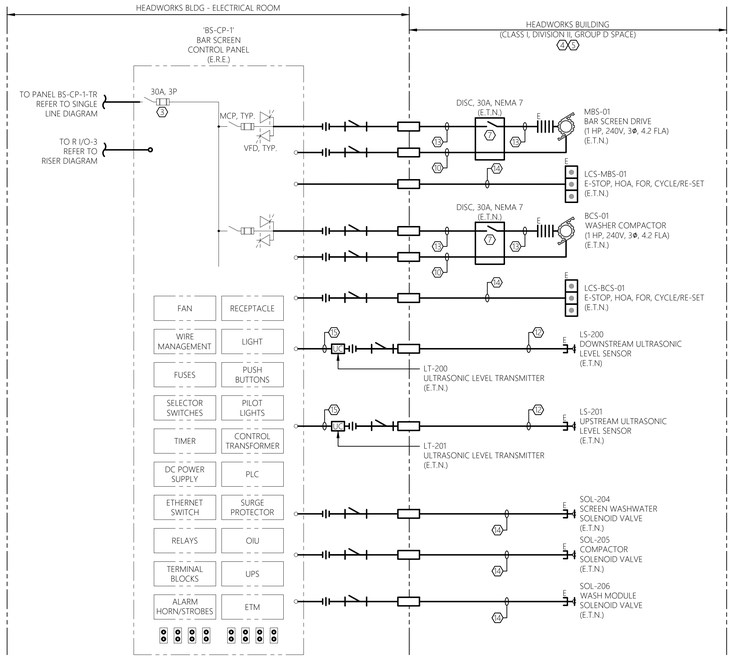

3 E-024 BAR SCREEN CONTROL PANEL RISER DIAGRAM
SCALE: NTS — HEADWORKS BLDG

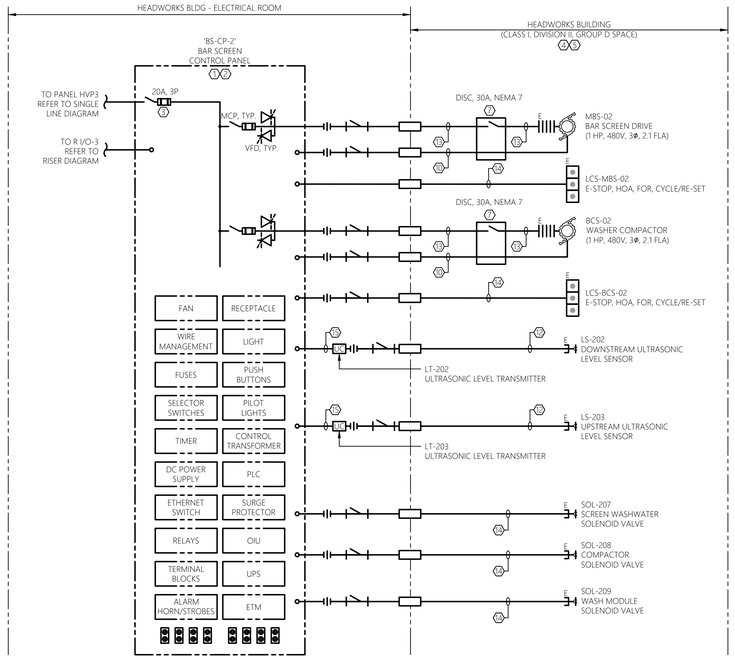

4 E-024 BAR SCREEN CONTROL PANEL RISER DIAGRAM
SCALE: NTS — HEADWORKS BLDG

GENERAL SHEET NOTES:

1. REFER TO E-001 FOR ELECTRICAL LEGENDS, ABBREVIATIONS AND GENERAL PROJECT NOTES.
2. PROVIDE GROUNDING PER NEC FOR ALL ELECTRICAL EQUIPMENT AND ASSOCIATED EQUIPMENT.
3. ALL CONDUCTORS NOT SHOWN FOR CLARITY. COORDINATE WITH ALL PRIME CONTRACTORS AND PROVIDE COMPLETE ELECTRICAL CIRCUITING FOR ALL INSTALLED EQUIPMENT. ALL REQUIREMENTS TO BE PER NEC.
4. REFER TO FLOOR PLANS FOR GENERAL DEVICE/EQUIPMENT LOCATIONS. COORDINATE FINAL LOCATIONS WITH PROCESS MECHANICAL DRAWINGS. REFER TO SITE PLAN FOR DUCT BANK INFORMATION
5. REFER TO SINGLE LINE DIAGRAMS, SPECIFICATIONS, AND SUBMITTAL DOCUMENTATION FOR ADDITIONAL INFORMATION/REQUIREMENTS.
6. CONTRACTOR TO COORDINATE ALL ASPECTS OF SEQUENCE OF CONSTRUCTION WITH OWNER ALL OTHER TRADE CONTRACTORS.
7. CIRCUITS SHOWN ARE POWER, CONTROL, INSTRUMENTATION, AND CONTROL CIRCUIT POWER. REFER TO SINGLE LINE DIAGRAMS, SCHEDULES, AND DETAILS FOR ADDITIONAL CIRCUITS.
8. ALL WIRING REQUIREMENTS INCLUDING BUT NOT LIMITED TO WIRE SIZE, TYPE, AND QUANTITY OF CONDUCTORS TO BE VERIFIED
WITH EQUIPMENT MANUFACTURER.
9. QUANTITY OF CONDUCTORS CALLED FOR MAY INCLUDE SPARE CONDUCTORS. PROVIDE CONDUCTORS SHOWN OR MINIMUM NUMBER REQUIRED PER MANUFACTURERS WRITTEN INSTRUCTIONS, ALL REQUIREMENTS TO BE PER NEC.
10. CONTRACTOR TO PROVIDE ARC FLASH WARNING LABELS FOR ALL NEW OR MODIFIED ELECTRICAL EQUIPMENT. REFER TO SPECIFICATIONS FOR REQUIREMENTS.
11. REFER TO ELECTRICAL DETAIL SHEETS AND SCHEDULE SHEETS FOR ADDITIONAL INFORMATION/REQUIREMENTS.
12. CONTRACTOR TO COORDINATE MOUNTING LOCATIONS OF ALL PANELS WITH OWNER AND ALL OTHER TRADE CONTRACTORS. PROVIDE ALL NECESSARY MOUNTING HARDWARE, BRACKETS, ACCESSORIES, ETC.
13. PROVIDE INTRINSICALLY SAFE BARRIERS AS REQUIRED INTERNAL TO CONTROL PANELS. ALL REQUIREMENTS TO BE PER NEC.
14. NOT ALL REQUIRED CLASSIFIED SPACE WIRING METHODS INCLUDING, BUT NOT LIMITED TO SEAL-OFFS MAY BE SHOWN. PROVIDE
WIRING METHODS PER NEC (LATEST EDITION). PROVIDE CONDUIT UNION WITHIN 6" OF EACH SEAL-OFF AT CONTROL PANELS,
DISTRIBUTION PANELS, VFDS, STARTERS, DISCONNECTS, OR SOURCE OF SUPPLY WHERE FEASIBLE.
15. NOT ALL REQUIRED THRU-WALL, WATERTIGHT, CONDUIT PENETRATIONS SHOWN FOR CLARITY. CONTRACTOR TO PROVIDE A
THRU-WALL, WATERTIGHT, CONDUIT PENETRATION FOR ALL CONDUIT PENETRATIONS WITHIN BUILDING INTERIOR/EXTERIOR WALLS AND FLOORS. REFER TO ELECTRICAL DETAILS FOR ADDITIONAL INFORMATION. COORDINATE WITH OWNER AND ALL OTHER TRADE CONTRACTORS PRIOR TO ROUGH-IN
16. CONTRACTOR TO COORDINATE ALL CONDUIT PENETRATIONS AND CONDUIT ROUTING WITH ALL OTHER TRADE CONTRACTORS AND OWNER PRIOR TO ROUGH-IN.
17. ALL CONDUCTORS TO BE COPPER AND CONTAIN THWN OR XHHW INSULATION.
18. ALL CONTROL/COMMUNICATION WIRING REQUIREMENTS INCLUDING BUT NOT LIMITED TO WIRE SIZE, TYPE, AND QUANTITY OF
CONDUCTORS TO BE VERIFIED WITH EQUIPMENT MANUFACTURER.
19. ALL PROPOSED EQUIPMENT LOCATIONS/INSTALLATIONS TO COMPLY WITH NEC ARTICLE 110.26 'SPACES ABOUT ELECTRICAL EQUIPMENT'.

SHEET KEY NOTES:

1. CONTROL PANEL AND ALL INTERNAL COMPONENTS ARE BY THIS CONTRACT. THIS CONTRACT IS RESPONSIBLE FOR ALL FIELD WIRING BETWEEN DEVICES, AND MOUNTING/INSTALLATION OF PANEL AS SHOWN/INDICATED; REFER TO SUBMITTAL DOCUMENTATION AND COORDINATE WITH OWNER TO PROVIDE COMPLETE SYSTEM FIELD CIRCUITRY AND TERMINATIONS AS REQUIRED FOR A COMPLETE AND OPERABLE SYSTEM.
2. NOT ALL INTERNAL COMPONENTS SHOWN FOR CLARITY. DIAGRAM IS INTENDED TO SHOW ALL REQUIRED FIELD CIRCUITING REQUIRED UNDER THIS CONTRACT. REFERENCE SUBMITTAL DOCUMENTATION FOR ALL PANEL INTERNAL COMPONENTS. CONTRACTOR TO PROVIDE ADDITIONAL INTERNAL CONTACTS AND JUMPERS PER CONTROL PANEL MANUFACTURERS RECOMMENDATIONS FOR AN OVERALL COMPLETE AND OPERABLE SYSTEM.
3. DISCONNECT SIZE SHOWN FOR BIDDING PURPOSES ONLY. COORDINATE DISCONNECT SIZE WITH EQUIPMENT MANUFACTURERS
RECOMMENDATIONS. COORDINATE CONDUCTOR/CONDUIT SIZE WITH MANUFACTURERS RECOMMENDED SIZE. ALL REQUIREMENTS TO BE PER NEC.
4. AREA IS A CLASS I, DIVISION II, GROUP D SPACE. THE CLASS I, DIVISION II, GROUP D SPACE EXTENDS 10' ENVELOPE AROUND
EQUIPMENT AND OPEN CHANNEL. ALL WIRING METHODS WITHIN THIS SPACE TO COMPLY WITH NEC ARTICLE 501. ALL ELECTRICAL EQUIPMENT AND DEVICES WITHIN THIS SPACE TO BE EXPLOSION PROOF RATED FOR USE IN A CLASS I, DIVISION II, GROUP D ENVIRONMENT.
5. ALL ELECTRICAL EQUIPMENT, COMPONENTS, DEVICES, AND RACEWAY SYSTEMS TO BE KEPT OUT OF CLASSIFIED AREAS TO GREATEST EXTENT POSSIBLE.
6. AREA IS A CLASS I, DIVISION II, GROUP D SPACE. THE CLASS I, DIVISION II, GROUP D SPACE EXTENDS TO ENTIRE CLOSED SPACE. ALL WIRING METHODS WITHIN THIS SPACE TO COMPLY WITH NEC ARTICLE 501. ALL ELECTRICAL EQUIPMENT AND DEVICES WITHIN THIS SPACE TO BE EXPLOSION PROOF RATED FOR USE IN A CLASS I, DIVISION II, GROUP D ENVIRONMENT.
7. PROPOSED EQUIPMENT DISCONNECT TO BE PROVIDED WITH A SET OF AUXILIARY CONTACTS. REFER TO EQUIPMENT CONNECTION SCHEDULE FOR ADDITIONAL INFORMATION/REQUIREMENTS.
8. PROVIDE CONDUIT BUSHING, FITTING, OR FLEX CONNECTION AS REQUIRED FOR PROPER CONNECTION OF DEVICE. ALL BUSHINGS, FITTINGS, OR FLEX CONNECTIONS TO BE SUITED FOR ENVIRONMENT INSTALLED WITHIN. COORDINATE WITH OTHER PRIME CONTRACTORS AND EQUIPMENT MANUFACTURER. FLEX CONNECTION LENGTHS TO BE MINIMIZED TO GREATEST EXTENT POSSIBLE. TYPICAL.
9. (3)#10 & #10G, 1"C.
10. (4)#14, 3/4"C. CIRCUIT TO BE UTILIZED FOR THE ASSOCIATED MOTOR THERMAL SAFETY SWITCH. CIRCUIT TO CONTROL TERMINALS
OF PROPOSED STARTER WITHIN CONTROL PANEL. IN THE EVENT OF A MOTOR HIGH TEMPERATURE CONDITION THE UNIT IS TO BE SHUT DOWN TO PREVENT DAMAGE TO UNIT. NOTE, TWO CONDUCTORS TO BE UTILIZED AS SPARES.
11. (2)#18STP & (4)#14, 3/4"C
12. FACTORY CABLE. THIS CONTRACT RESPONSIBLE FOR ALL TERMINATIONS PER MANUFACTURERS RECOMMENDATIONS. PROVIDE
3/4" CONDUIT WHERE EXPOSED TO PHYSICAL DAMAGE AND RECOMMENDED BY THE EQUIPMENT MANUFACTURER. CONDUIT SIZE IS LISTED AS MINIMUM, PROVIDE LARGER AS REQUIRED PER MANUFACTURER
13. (3)#12 & #12G, 3/4"C. PROVIDE AS VFD SHIELDED CABLE. CONDUIT SIZE IS LISTED AS MINIMUM, PROVIDE LARGER DIAMETER AS REQUIRED PER MANUFACTURER. REFER TO SPECIFICATIONS FOR ADDITIONAL INFORMATION. ALL REQUIREMENTS TO BE PER NEC.
14. (12)#14, 1"C
15. (2)#18STP, 3/4"C
16. (4)#14, 3/4"C
17. CONTRACTOR TO COORDINATE FINAL DUCT BANK ROUTING/REQUIREMENTS WITH EXISTING FIELD CONDITIONS, PROPOSED WORK, OWNER AND ENGINEER PRIOR TO ROUGH-IN TO AVOID CONFLICTS.
18. CONTRACTOR RESPONSIBLE TO RESTORE ALL DISTURBED SURFACES AS PART OF THIS CONTRACT. COORDINATE FINAL REQUIREMENTS WITH THE OWNER AND ENGINEER. REFER TO TYPICAL DUCT BANK SECTION DETAILS FOR ADDITIONAL INFORMATION/REQUIREMENTS.
19. (24)#14, 1"C
20. REFER TO ELECTRICAL DETAILS FOR ADDITIONAL INFORMATION/REQUIREMENTS. CLOSELY COORDINATE FINAL PENETRATION LOCATIONS/REQUIREMENTS WITH APPLICABLE CONTRACTOR, OWNER, AND ENGINEER. TYPICAL.
21. SPARE 2" C.
22. PROVIDE SPARE CONDUIT AS SHOWN. STUB CONDUIT ADJACENT TO EQUIPMENT, OR AS DIRECTED BY THE OWNER. PROVIDE PULL ROPE AND CAP BOTH ENDS. CONTRACTOR TO PROVIDE LABEL FOR ALL SPARE CONDUITS INDICATING CONDUIT DESTINATION. REFER TO SPECIFICATIONS FOR ADDITIONAL INFORMATION/REQUIREMENTS.

CONTROL DIAGRAMS ARE SCHEMATIC IN NATURE AND SHOWS ALL INTERCONNECTIONS. CONTRACTOR MAY GROUP POWER CIRCUITS INTO LARGER CONDUIT AND GROUP CONTROL CIRCUITS INTO SEPARATE LARGER CONDUIT. GROUPING OF CIRCUITS INTO LARGER CONDUITS MUST COMPLY WITH NEC FILL AND DERATING REQUIREMENTS. VFD INPUT & OUTPUT CONDUCTORS MUST BE RUN INDEPENDENT OF OTHER CONDUCTORS.

MHE ENGINEERING
33 Airport Center Drive, Suite 202
New Windsor, NY 12553
(845) 567-3100
111 Wheatfield Drive, Suite 1
Milford, PA 18337
(570) 296-2765

BID ADDENDUM

JADE STONE ENGINEERING

STATE OF NEW YORK — JEFFREY E ROBINSON — 095896 — LICENSED PROFESSIONAL ENGINEER

HAZARDOUS MATERIAL NOTE:

THE SERVICES PROVIDED BY MHE, INCLUDING ALL WORK DEPICTED ON MHE PLANS, DO NOT INCLUDE SERVICES RELATED TO THE IDENTIFICATION, CONTROLS OR HANDLING OF HAZARDOUS MATERIALS, INCLUDING SUCH MATERIALS AS ASBESTOS AND LEAD PAINT. ALL TESTING, IDENTIFICATION, ABATEMENT, CONTROLS, AND HANDLING OF HAZARDOUS MATERIALS SHALL BE UNDERTAKEN BY A HAZARDOUS MATERIAL CONSULTANT AND CERTIFIED PROFESSIONALS. IF SUCH MATERIALS HAVE BEEN IDENTIFIED, CONTRACTOR WILL COMMUNICATE DIRECTLY WITH HAZARDOUS MATERIAL PROFESSIONAL FOR THE PERFORMANCE OF ANY WORK ON OR ADJACENT TO SAID MATERIALS. IF UNIDENTIFIED MATERIALS OF CONCERN ARE ENCOUNTERED WHILE UNDERTAKING THE WORK SHOWN HEREON, CONTRACTOR SHALL IMMEDIATELY NOTIFY ENGINEER AND OWNER, AND SHALL OBTAIN DIRECTION FROM THE HAZARDOUS MATERIAL CONSULTANT PRIOR TO THE CONTINUATION OF WORK INVOLVING SUSPECTED MATERIAL.

UDIG·NY SAFE DIGGING STARTS HERE CALL 811

UNAUTHORIZED ADDITION OR ALTERATION OF THIS PLAN IS A VIOLATION OF SECTION 7209(2) OF THE NEW YORK STATE EDUCATION LAW.

ALL PRODUCTION & INTELLECTUAL PROPERTY RIGHT RESERVED ©

CAESARS LANE WWTP EXPANSION PROJECT: PHASE 2
145 CAESARS LN.
NEW WINDSOR, NY 12553
FOR TOWN OF NEW WINDSOR
555 UNION AVE.
NEW WINDSOR, NY 12553

ELECTRICAL RISER DIAGRAMS

REVISIONS

NO.	DESCRIPTION	DATE

ISSUED DATE:	06 JUNE, 2025
DESIGN BY:	RRM
DRAWN BY:	CDJ
CHECKED BY:	MGR
REVIEWED BY:	JER

SHEET NO.
E-024

PROJECT # 18-732 PHASE #

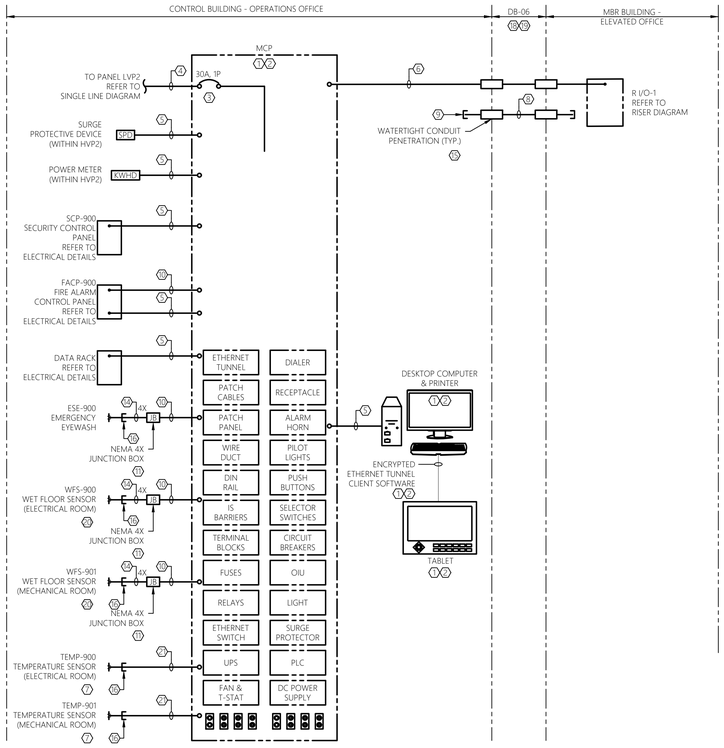

1 E-025 MAIN CONTROL PANEL RISER DIAGRAM
SCALE: NTS — CONTROL BUILDING

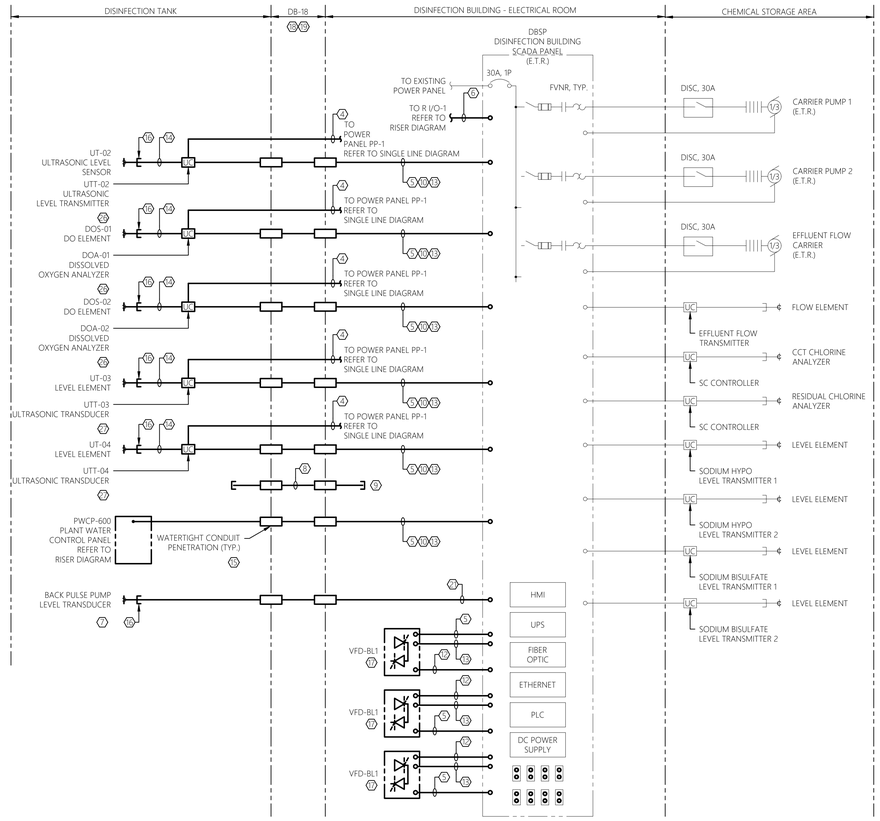

2 E-025 EXISTING DISINFECTION BUILDING SCADA PANEL DBSP RISER DIAGRAM
SCALE: NTS — CHEMICAL FEED BUILDING

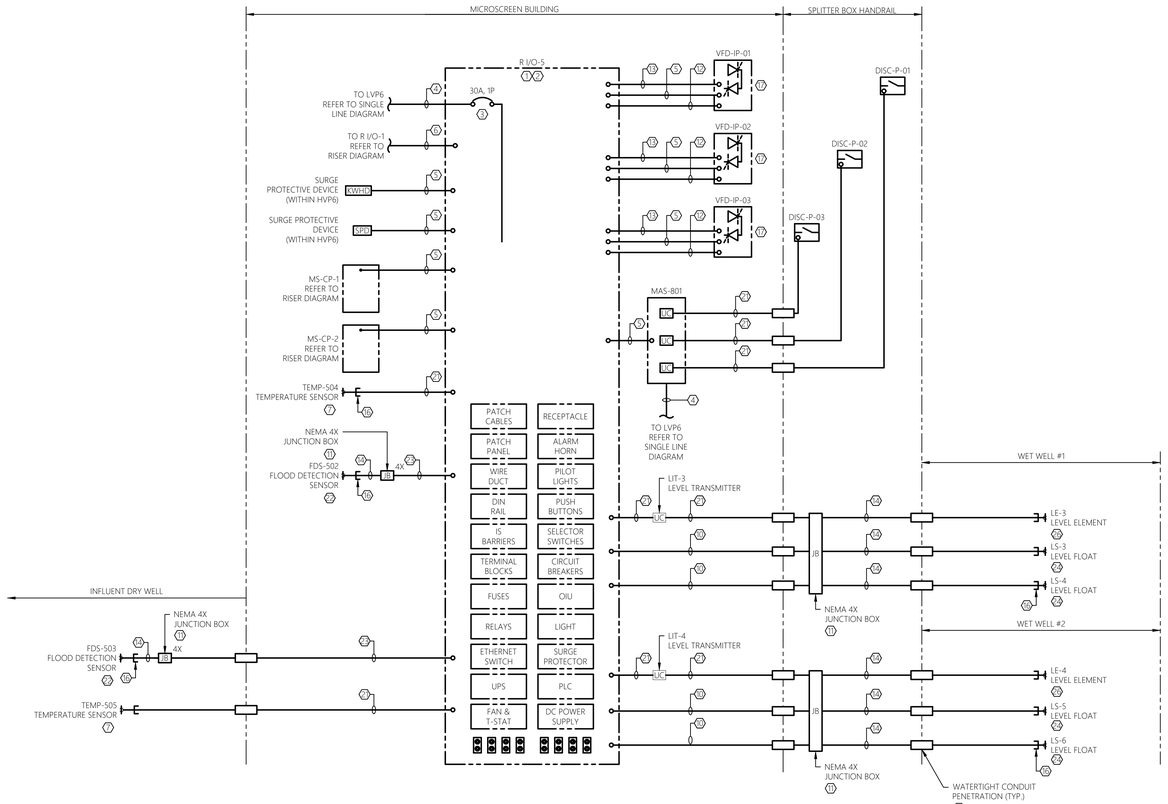

3 E-025 REMOTE I/O PANEL #5 RISER DIAGRAM
SCALE: NTS — MICROSCREEN BUILDING

GENERAL SHEET NOTES:

1. REFER TO E-001 FOR ELECTRICAL LEGENDS, ABBREVIATIONS AND GENERAL PROJECT NOTES.
2. PROVIDE GROUNDING PER NEC FOR ALL ELECTRICAL EQUIPMENT AND ASSOCIATED EQUIPMENT.
3. ALL CONDUCTORS, EQUIPMENT, COMPONENTS, AND DEVICES NOT SHOWN FOR CLARITY. COORDINATE WITH ALL PRIME CONTRACTORS AND PROVIDE COMPLETE ELECTRICAL CIRCUITING FOR ALL INSTALLED EQUIPMENT. ALL REQUIREMENTS TO BE PER NEC
4. REFER TO ELECTRICAL PLANS FOR GENERAL DEVICE/EQUIPMENT LOCATIONS. COORDINATE FINAL LOCATIONS WITH ALL PRIME CONTRACT DRAWINGS. REFER TO ELECTRICAL SITE PLAN FOR DUCT BANK INFORMATION
5. REFER TO SINGLE LINE DIAGRAMS, SPECIFICATIONS, AND SUBMITTAL DOCUMENTATION FOR ADDITIONAL INFORMATION/REQUIREMENTS.
6. CONTRACTOR TO COORDINATE ALL ASPECTS OF SEQUENCE OF CONSTRUCTION WITH OWNER AND ALL OTHER TRADE CONTRACTORS.
7. CIRCUITS SHOWN ARE POWER, CONTROL, INSTRUMENTATION, AND CONTROL CIRCUIT POWER. REFER TO SINGLE LINE DIAGRAMS, SCHEDULES, AND DETAILS FOR ADDITIONAL CIRCUITS.
8. ALL WIRING REQUIREMENTS INCLUDING BUT NOT LIMITED TO WIRE SIZE, TYPE, AND QUANTITY OF CONDUCTORS TO BE VERIFIED WITH EQUIPMENT MANUFACTURER.
9. QUANTITY OF CONDUCTORS CALLED FOR MAY INCLUDE SPARE CONDUCTORS. PROVIDE CONDUCTORS SHOWN OR MINIMUM NUMBER REQUIRED PER MANUFACTURERS WRITTEN INSTRUCTIONS. ALL REQUIREMENTS TO BE PER NEC.
10. CONTRACTOR TO PROVIDE ARC FLASH WARNING LABELS FOR ALL NEW OR MODIFIED ELECTRICAL EQUIPMENT. REFER TO SPECIFICATIONS FOR REQUIREMENTS.
11. REFER TO ELECTRICAL DETAIL SHEETS AND SCHEDULE SHEETS FOR ADDITIONAL INFORMATION/REQUIREMENTS.
12. CONTRACTOR TO COORDINATE MOUNTING LOCATIONS OF ALL PANELS WITH OWNER AND ALL OTHER TRADE CONTRACTORS. PROVIDE ALL NECESSARY MOUNTING HARDWARE, BRACKETS, ACCESSORIES, ETC.
13. PROVIDE INTRINSICALLY SAFE BARRIERS AS REQUIRED INTERNAL TO CONTROL PANELS. ALL REQUIREMENTS TO BE PER NEC.
14. NOT ALL REQUIRED CLASSIFIED SPACE WIRING METHODS INCLUDING, BUT NOT LIMITED TO SEAL-OFFS MAY BE SHOWN. PROVIDE WIRING METHODS PER NEC (LATEST EDITION). PROVIDE CONDUIT UNION WITHIN 6" OF EACH SEAL-OFF AT CONTROL PANELS, DISTRIBUTION PANELS, VFDS, STARTERS, DISCONNECTS, OR SOURCE OF SUPPLY WHERE FEASIBLE
15. NOT ALL REQUIRED THRU-WALL, WATERTIGHT, CONDUIT PENETRATIONS SHOWN FOR CLARITY. CONTRACTOR TO PROVIDE A THRU-WALL, WATERTIGHT, CONDUIT PENETRATION FOR ALL CONDUIT PENETRATIONS WITHIN BUILDING INTERIOR/EXTERIOR WALLS AND FLOORS. REFER TO ELECTRICAL DETAILS FOR ADDITIONAL INFORMATION. COORDINATE WITH OWNER AND ALL OTHER TRADE CONTRACTORS PRIOR TO ROUGH-IN
16. CONTRACTOR TO COORDINATE ALL CONDUIT PENETRATIONS AND CONDUIT ROUTING WITH ALL OTHER TRADE CONTRACTORS AND OWNER PRIOR TO ROUGH-IN.
17. ALL CONDUCTORS TO BE COPPER AND CONTAIN XHHW-2 INSULATION.
18. ALL PROPOSED EQUIPMENT LOCATIONS/INSTALLATIONS TO COMPLY WITH NEC ARTICLE 110.26 'SPACES ABOUT ELECTRICAL EQUIPMENT'.

SHEET KEY NOTES:

1. CONTROL PANEL AND ALL INTERNAL COMPONENTS TO BE FURNISHED BY CONTRACTOR THRU BID ALLOWANCE #1. THIS CONTRACT IS RESPONSIBLE FOR ALL FIELD WIRING BETWEEN DEVICES, AND MOUNTING/INSTALLATION/WIRING OF PANEL AS SHOWN/INDICATED. REFER TO SUBMITTAL DOCUMENTATION AND COORDINATE WITH OWNER AND ENGINEER TO PROVIDE COMPLETE SYSTEM FIELD CIRCUITRY AND TERMINATIONS AS REQUIRED FOR A COMPLETE AND OPERABLE SYSTEM.
2. NOT ALL INTERNAL COMPONENTS SHOWN FOR CLARITY. DIAGRAM IS INTENDED TO SHOW ALL REQUIRED FIELD CIRCUITING REQUIRED UNDER THIS CONTRACT. REFERENCE SUBMITTAL DOCUMENTATION AND SPECIFICATION SECTION 260912 CONTROL PANELS AND INTEGRATION FOR ALL PANEL INTERNAL COMPONENTS.
3. DISCONNECT SIZE SHOWN FOR BIDDING PURPOSES ONLY. COORDINATE DISCONNECT SIZE WITH EQUIPMENT MANUFACTURERS RECOMMENDATIONS. COORDINATE CONDUCTOR/CONDUIT SIZE WITH MANUFACTURERS RECOMMENDED SIZE. ALL REQUIREMENTS TO BE PER NEC.
4. (2)#10 & #10G, 1"C.
5. (1) CAT 6A PREMIUM ETHERNET CABLE, 1"C. PROVIDE AS PLENUM RATED WITH 4 BONDED PAIRS. TO BE BELDEN #3633 OR APPROVED EQUAL.
6. 8-STRAND, MULTI-MODE (50 MICRON CORE / 125 MICRON CLADDING DIAMETER), FIBER OPTIC CABLE, 4"C. PROVIDE MAXCELL FABRIC INNERDUCT WITHIN 4" CONDUIT. PROVIDE AS MAXCELL 4" 3-CELL PRODUCT. INSTALL PROPOSED FIBER OPTIC CABLE WITHIN 1-CELL OF THE PROPOSED INNERDUCT AND A PULL STRING THROUGH THE OTHER TWO (2) CELLS. FIBER OPTIC CABLE TO BE CONTINUOUS (NO SPLICE) AND SUITABLE FOR INDOOR/OUTDOOR APPLICATIONS ALONG WITH SUITABLE FOR DIRECT BURIAL APPLICATIONS. FIBER OPTIC CABLE TO BE MODEL CLEARCURVE AS MANUFACTURED BY CORNING OR APPROVED EQUAL. SUBMIT PRODUCT DATA TO ENGINEER FOR REVIEW DURING SUBMITTAL PHASE. REFER TO SPECIFICATIONS FOR ADDITIONAL INFORMATION/REQUIREMENTS.
7. TEMPERATURE SENSOR TO BE PROVIDED AS PART OF THIS CONTRACT. TEMPERATURE SENSORS SHALL BE OMEGA EWS-TX SERIES WALL MOUNT SENSOR OR APPROVED EQUAL. CONTRACTOR TO PROVIDE ELECTRICAL BOX, 24 VDCPOWER SUPPLY, CIRCUITRY (CONDUIT AND CONDUCTORS) WALL PLATE, AND MOUNTING BRACKET AS REQUIRED FOR A COMPLETE AND OPERABLE ROOM TEMPERATURE SENSING DEVICE PER MANUFACTURER'S RECOMMENDATIONS
8. SPARE 4"C.
9. PROVIDE SPARE CONDUIT AS SHOWN. STUB CONDUIT ADJACENT TO EQUIPMENT, OR AS DIRECTED BY THE OWNER. PROVIDE PULL ROPE AND CAP BOTH ENDS. CONTRACTOR TO PROVIDE LABEL FOR ALL SPARE CONDUITS INDICATING CONDUIT DESTINATION. REFER TO SPECIFICATIONS FOR ADDITIONAL INFORMATION/REQUIREMENTS.
10. (4)#14, 1"C
11. CONTRACTOR TO PROVIDE JUNCTION/PULL BOXES FOR SPLICING, OR EXTENDING CIRCUITRY AS REQUIRED. PROVIDE NECESSARY TERMINAL STRIPS, OR SPLICE KITS WITHIN JUNCTION BOX TO EXTEND CIRCUITRY AS SHOWN. (NOTE, JUNCTION BOXES ARE NOT ALWAYS SHOWN ON FLOOR PLANS. CONTRACTOR TO FIELD LOCATE AS NECESSARY). JUNCTION BOXES ARE TO BE RATED FOR ENVIRONMENT INSTALLED, INCLUDING BUT NOT LIMITED TO HAZARDOUS ENVIRONMENTS, CORROSIVE ENVIRONMENTS, AND OUTDOOR INSTALLATIONS. CONTRACTOR TO FIELD VERIFY AND COORDINATE CONDUIT ARRANGEMENT ENTERING/LEAVING JUNCTION BOX AS REQUIRED. CONTRACTOR TO SIZE JUNCTION BOXES PER NEC ARTICLE 314. JUNCTION BOXES TO BE MANUFACTURED BY EATON, OR APPROVED EQUAL. TYPICAL OF ALL JUNCTION BOXES SHOWN ON THIS DRAWING.
12. (24)#14, 1"C
13. (4)#18STP, 1"C
14. FACTORY CABLE. THIS CONTRACT RESPONSIBLE FOR ALL TERMINATIONS PER MANUFACTURERS RECOMMENDATIONS. PROVIDE 1" CONDUIT WHERE EXPOSED TO PHYSICAL DAMAGE AND RECOMMENDED BY THE EQUIPMENT MANUFACTURER. CONDUIT SIZE IS LISTED AS MINIMUM. PROVIDE LARGER AS REQUIRED PER MANUFACTURER. COORDINATE FINAL INSTALLATION REQUIREMENTS WITH MANUFACTURER.
15. REFER TO ELECTRICAL DETAILS FOR ADDITIONAL INFORMATION/REQUIREMENTS. CLOSELY COORDINATE FINAL PENETRATION LOCATIONS/REQUIREMENTS WITH APPLICABLE CONTRACTOR, OWNER, AND ENGINEER. TYPICAL.
16. PROVIDE CONDUIT BUSHING, FITTING, OR FLEX CONNECTION AS REQUIRED FOR PROPER CONNECTION OF DEVICE. ALL BUSHINGS, FITTINGS, OR FLEX CONNECTIONS TO BE SUITED FOR ENVIRONMENT INSTALLED WITHIN, INCLUDING BUT NOT LIMITED TO, HAZARDOUS ENVIRONMENTS, CORROSIVE ENVIRONMENTS, AND OUTDOOR INSTALLATIONS. COORDINATE WITH APPLICABLE CONTRACTOR AND EQUIPMENT MANUFACTURER. FLEX CONNECTION LENGTHS TO BE MINIMIZED TO GREATEST EXTENT POSSIBLE. TYPICAL.
17. REFER TO ELECTRICAL SINGLE LINE DIAGRAM FOR POWER CIRCUITRY SPECIFICATIONS. REFER TO ELECTRICAL SCHEDULES FOR ADDITIONAL INFORMATION & ELECTRICAL SPECIFICATIONS FOR ADDITIONAL REQUIREMENTS.
18. CONTRACTOR RESPONSIBLE TO RESTORE ALL DISTURBED SURFACES AS PART OF THIS CONTRACT. COORDINATE FINAL REQUIREMENTS WITH THE OWNER AND ENGINEER. REFER TO TYPICAL DUCT BANK SECTION DETAILS FOR ADDITIONAL INFORMATION/REQUIREMENTS.
19. CONTRACTOR TO COORDINATE FINAL DUCT BANK ROUTING/REQUIREMENTS WITH EXISTING FIELD CONDITIONS, PROPOSED WORK, OWNER AND ENGINEER PRIOR TO ROUGH-IN TO AVOID CONFLICTS.
20. WET FLOOR SENSOR TO BE PROVIDED AS PART OF BID ALLOWANCE #1. PROVIDE AS WINLAND ELECTRONICS, WATERBUG WB200, OR APPROVED EQUAL.
21. (2)#18STP, 1"C
22. FLOOD DETECTION SENSOR TO BE PROVIDED AS PAINTEK CLS200 CAPACITANCE PROBE AS MANUFACTURED BY SIEMENS, OR APPROVED EQUAL THRU BID ALLOWANCE #1. PROVIDE ALL REQUIRED MOUNTING HARDWARE, BRACKETTS, ACCESSORIES, ETC... AND CIRCUITRY (CONDUIT AND CONDUCTORS) FOR AN OVERALL COMPLETE AND OPERABLE FLOOD DETECTION SYSTEM. REFER TO SPECIFICATION SECTION 260912 CONTROL PANELS AND INTEGRATION FOR ADDITIONAL INFORMATION/REQUIREMENTS. PROVIDE LABEL PER SPECIFICATION SECTION 260553 IDENTIFICATION FOR ELECTRICAL SYSTEMS.
23. (2)#18STP & (4)#14, 1"C
24. FLOAT SWITCH TO BE PROVIDED AS SJE RHOMBUS MILI-AMP-MASTER, OR APPROVED EQUAL THRU BID ALLOWANCE #1. PROVIDE REQUIRED MOUNTING HARDWARE, BRACKETS, ACCESSORIES, ETC... AND CIRCUITRY (CONDUIT AND CONDUCTORS) FOR AN OVERALL COMPLETE AND OPERABLE FLOAT SWITCH SYSTEM. REFER TO SPECIFICATIONS SECTION 260912 CONTROL PANELS AND INTEGRATION FOR ADDITIONAL INFORMATION/REQUIREMENTS. PROVIDE LABEL PER SPECIFICATION SECTION 260553 IDENTIFICATION FOR ELECTRICAL SYSTEMS.
25. (3)#18STP, 3/4"C.
26. LEVEL TRANSMITTER TO BE PROVIDED AS KELLER AMERICA LEVELRAT SUBMERSIBLE LEVEL TRANSMITTER, OR APPROVED EQUAL THRU BID ALLOWANCE #1. PROVIDE REQUIRED MOUNTING HARDWARE, BRACKETS, ACCESSORIES, ETC... AND CIRCUITRY (CONDUIT AND CONDUCTORS) FOR AN OVERALL COMPLETE AND OPERABLE TRANSMITTER SYSTEM. REFER TO SPECIFICATIONS SECTION 260912 CONTROL PANELS AND INTEGRATION FOR ADDITIONAL INFORMATION/REQUIREMENTS. PROVIDE LABEL PER SPECIFICATION SECTION 260553 IDENTIFICATION FOR ELECTRICAL SYSTEMS.

CONTROL DIAGRAMS ARE SCHEMATIC IN NATURE AND SHOWS ALL INTERCONNECTIONS. CONTRACTOR MAY GROUP POWER CIRCUITS INTO LARGER CONDUIT AND GROUP CONTROL CIRCUITS INTO SEPARATE LARGER CONDUIT. GROUPING OF CIRCUITS INTO LARGER CONDUITS MUST COMPLY WITH NEC FILL AND DERATING REQUIREMENTS. VFD INPUT & OUTPUT CONDUCTORS MUST BE RUN INDEPENDENT OF OTHER CONDUCTORS.

MHE ENGINEERING
33 Airport Center Drive, Suite 202
New Windsor, NY 12553
(845) 567-3100
111 Wheatfield Drive, Suite 1
Milford, PA 18337
(570) 296-2765

BID ADDENDUM

JADE STONE ENGINEERING

STATE OF NEW YORK — JEFFREY E. ROBINSON — 095896 — LICENSED PROFESSIONAL ENGINEER

HAZARDOUS MATERIAL NOTE:
THE SERVICES PROVIDED BY MHE, INCLUDING ALL WORK DEPICTED ON MHE PLANS, DO NOT INCLUDE SERVICES RELATED TO THE IDENTIFICATION, CONTROLS OR HANDLING OF HAZARDOUS MATERIALS, INCLUDING SUCH MATERIALS AS ASBESTOS AND LEAD PAINT. ALL TESTING, IDENTIFICATION, ABATEMENT, CONTROLS, AND HANDLING OF HAZARDOUS MATERIALS SHALL BE UNDERTAKEN BY A HAZARDOUS MATERIAL CONSULTANT AND CERTIFIED PROFESSIONALS. IF SUCH MATERIALS HAVE BEEN IDENTIFIED, CONTRACTOR WILL COMMUNICATE DIRECTLY WITH HAZARDOUS MATERIAL PROFESSIONAL FOR THE PERFORMANCE OF ANY WORK ON OR ADJACENT TO SAID MATERIALS. IF UNIDENTIFIED MATERIALS OF CONCERN ARE ENCOUNTERED WHILE UNDERTAKING THE WORK SHOWN HEREON, CONTRACTOR SHALL IMMEDIATELY NOTIFY ENGINEER AND OWNER, AND SHALL OBTAIN DIRECTION FROM THE HAZARDOUS MATERIAL CONSULTANT PRIOR TO THE CONTINUATION OF WORK INVOLVING SUSPECTED MATERIAL.

UDIG·NY SAFE DIGGING STARTS HERE
CALL 811

UNAUTHORIZED ADDITION OR ALTERATION OF THIS PLAN IS A VIOLATION OF SECTION 7209(2) OF THE NEW YORK STATE EDUCATION LAW.

ALL PRODUCTION & INTELLECTUAL PROPERTY RIGHT RESERVED ©

CAESARS LANE WWTP EXPANSION PROJECT: PHASE 2
145 CAESARS LN.
NEW WINDSOR, NY 12553
FOR TOWN OF NEW WINDSOR
555 UNION AVE.
NEW WINDSOR, NY 12553

ELECTRICAL RISER DIAGRAMS

REVISIONS

NO.	DESCRIPTION	DATE

ISSUED DATE:	06 JUNE, 2025
DESIGN BY:	RRM
DRAWN BY:	CDJ
CHECKED BY:	MGR
REVIEWED BY:	JER

SHEET NO.
E-025

PROJECT # 18-732 — PHASE #

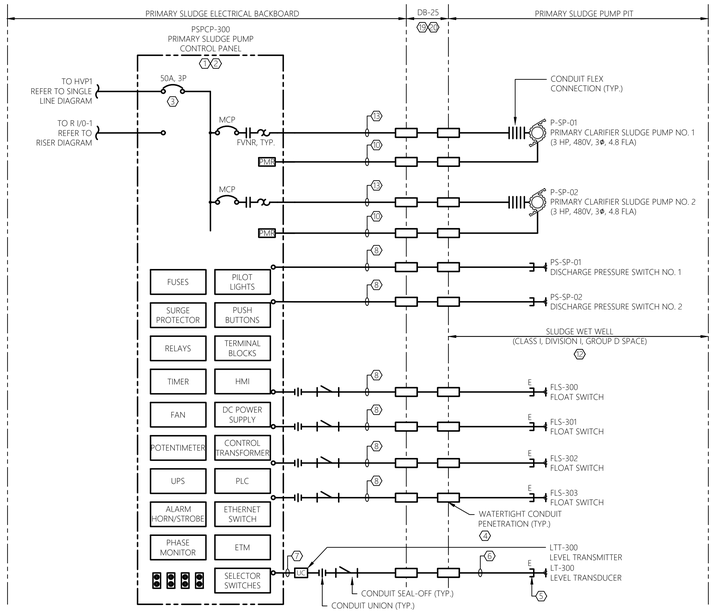

4 E-026 PRIMARY SLUDGE PUMP CONTROL PANEL RISER DIAGRAM
SCALE: NTS — CAESARS LANE

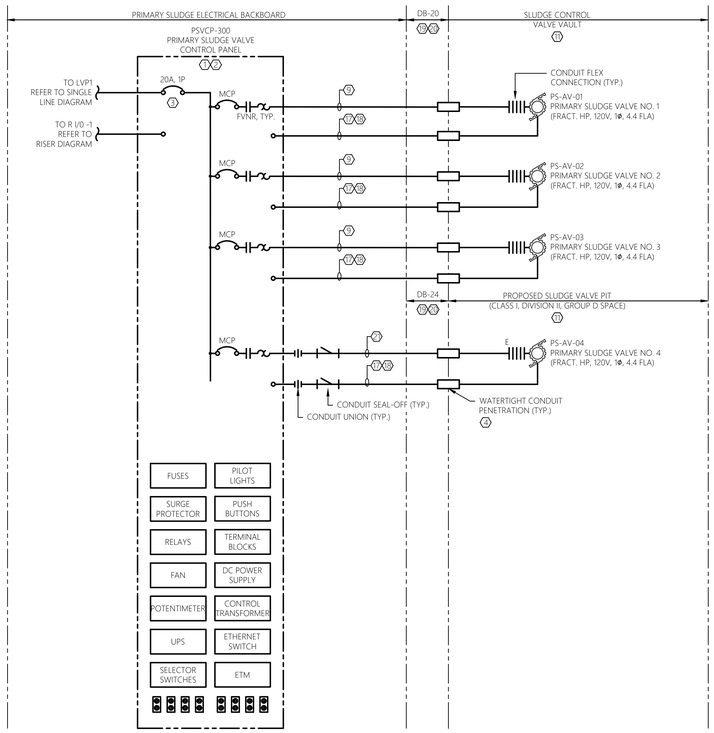

4 E-026 PRIMARY SLUDGE VALVE CONTROL PANEL RISER DIAGRAM
SCALE: NTS — CAESARS LANE

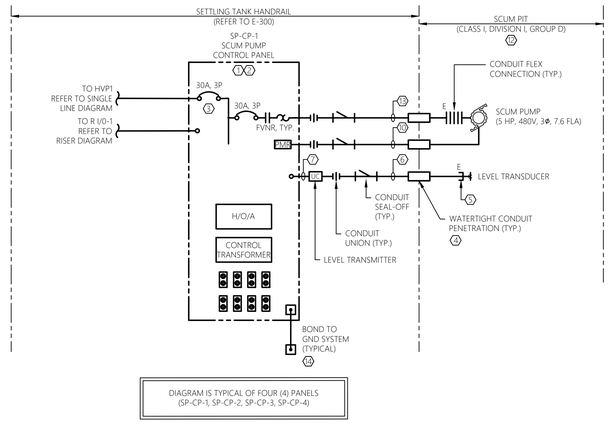

DIAGRAM IS TYPICAL OF FOUR (4) PANELS
(SP-CP-1, SP-CP-2, SP-CP-3, SP-CP-4)

5 E-026 SCUM PUMP CONTROL PANEL RISER DIAGRAM
SCALE: NTS — SETTLING TANKS

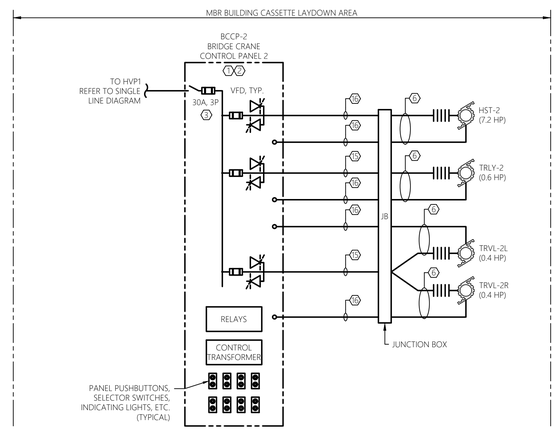

4 E-026 BRIDGE CRANE CONTROL PANEL RISER DIAGRAM
SCALE: NTS — CASSETTE LAYDOWN AREA

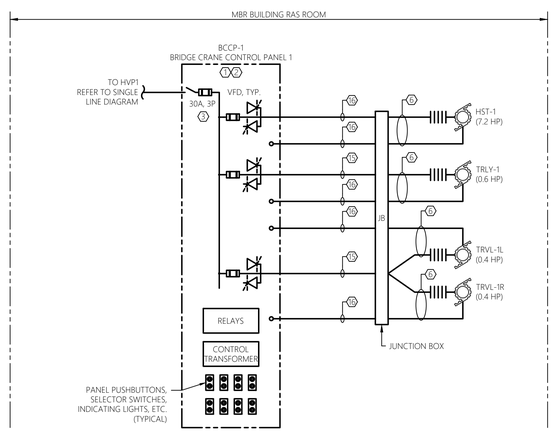

3 E-026 BRIDGE CRANE CONTROL PANEL RISER DIAGRAM
SCALE: NTS — RAS PUMP ROOM

GENERAL SHEET NOTES:

1. REFER TO E-001 FOR ELECTRICAL LEGENDS, ABBREVIATIONS AND GENERAL PROJECT NOTES.
2. PROVIDE GROUNDING PER NEC FOR ALL ELECTRICAL EQUIPMENT AND ASSOCIATED EQUIPMENT.
3. ALL CONDUCTORS NOT SHOWN FOR CLARITY. COORDINATE WITH ALL PRIME CONTRACTORS AND PROVIDE COMPLETE ELECTRICAL CIRCUITING FOR ALL INSTALLED EQUIPMENT. ALL REQUIREMENTS TO BE PER NEC.
4. REFER TO FLOOR PLANS FOR GENERAL DEVICE/EQUIPMENT LOCATIONS. COORDINATE FINAL LOCATIONS WITH PROCESS MECHANICAL DRAWINGS. REFER TO SITE PLAN FOR DUCT BANK INFORMATION
5. REFER TO SINGLE LINE DIAGRAMS, SPECIFICATIONS, AND SUBMITTAL DOCUMENTATION FOR ADDITIONAL INFORMATION/REQUIREMENTS.
6. CONTRACTOR TO COORDINATE ALL ASPECTS OF SEQUENCE OF CONSTRUCTION WITH OWNER ALL OTHER TRADE CONTRACTORS.
7. CIRCUITS SHOWN ARE POWER, CONTROL, INSTRUMENTATION, AND CONTROL CIRCUIT POWER. REFER TO SINGLE LINE DIAGRAMS, SCHEDULES, AND DETAILS FOR ADDITIONAL CIRCUITS.
8. ALL WIRING REQUIREMENTS INCLUDING BUT NOT LIMITED TO WIRE SIZE, TYPE, AND QUANTITY OF CONDUCTORS TO BE VERIFIED WITH EQUIPMENT MANUFACTURER.
9. QUANTITY OF CONDUCTORS CALLED FOR MAY INCLUDE SPARE CONDUCTORS. PROVIDE CONDUCTORS SHOWN OR MINIMUM NUMBER REQUIRED PER MANUFACTURERS WRITTEN INSTRUCTIONS. ALL REQUIREMENTS TO BE PER NEC.
10. CONTRACTOR TO PROVIDE ARC FLASH WARNING LABELS FOR ALL NEW OR MODIFIED ELECTRICAL EQUIPMENT. REFER TO SPECIFICATIONS FOR REQUIREMENTS.
11. REFER TO ELECTRICAL DETAIL SHEETS AND SCHEDULE SHEETS FOR ADDITIONAL INFORMATION/REQUIREMENTS.
12. CONTRACTOR TO COORDINATE MOUNTING LOCATIONS OF ALL PANELS WITH OWNER AND ALL OTHER TRADE CONTRACTORS. PROVIDE ALL NECESSARY MOUNTING HARDWARE, BRACKETS, ACCESSORIES, ETC..
13. PROVIDE INTRINSICALLY SAFE BARRIERS AS REQUIRED INTERNAL TO CONTROL PANELS. ALL REQUIREMENTS TO BE PER NEC.
14. NOT ALL REQUIRED CLASSIFIED SPACE WIRING METHODS INCLUDING, BUT NOT LIMITED TO SEAL-OFFS MAY BE SHOWN. PROVIDE WIRING METHODS PER NEC (LATEST EDITION). PROVIDE CONDUIT UNION WITHIN 6" OF EACH SEAL-OFF AT CONTROL PANELS, DISTRIBUTION PANELS, VFDS, STARTERS, DISCONNECTS, OR SOURCE OF SUPPLY WHERE FEASIBLE.
15. NOT ALL REQUIRED THRU-WALL, WATERTIGHT, CONDUIT PENETRATIONS SHOWN FOR CLARITY. CONTRACTOR TO PROVIDE A THRU-WALL, WATERTIGHT, CONDUIT PENETRATION FOR ALL CONDUIT PENETRATIONS WITHIN BUILDING INTERIOR/EXTERIOR WALLS AND FLOORS. REFER TO ELECTRICAL DETAILS FOR ADDITIONAL INFORMATION. COORDINATE WITH OWNER AND ALL OTHER TRADE CONTRACTORS PRIOR TO ROUGH-IN
16. CONTRACTOR TO COORDINATE ALL CONDUIT PENETRATIONS AND CONDUIT ROUTING WITH ALL OTHER TRADE CONTRACTORS AND OWNER PRIOR TO ROUGH-IN.
17. ALL CONDUCTORS TO BE COPPER AND CONTAIN THWN OR XHHW INSULATION.
18. ALL CONTROL/COMMUNICATION WIRING REQUIREMENTS INCLUDING BUT NOT LIMITED TO WIRE SIZE, TYPE, AND QUANTITY OF CONDUCTORS TO BE VERIFIED WITH EQUIPMENT MANUFACTURER.
19. ALL PROPOSED EQUIPMENT LOCATIONS/INSTALLATIONS TO COMPLY WITH NEC ARTICLE 110.26 'SPACES ABOUT ELECTRICAL EQUIPMENT'.

SHEET KEY NOTES:

1. CONTROL PANEL AND ALL INTERNAL COMPONENTS ARE BY THIS CONTRACT. THIS CONTRACT IS RESPONSIBLE FOR ALL FIELD WIRING BETWEEN DEVICES, AND MOUNTING/INSTALLATION OF PANEL AS SHOWN/INDICATED. REFER TO SUBMITTAL DOCUMENTATION AND COORDINATE WITH OWNER TO PROVIDE COMPLETE SYSTEM FIELD CIRCUITRY AND TERMINATIONS AS REQUIRED FOR A COMPLETE AND OPERABLE SYSTEM.
2. NOT ALL INTERNAL COMPONENTS SHOWN FOR CLARITY. DIAGRAM IS INTENDED TO SHOW ALL REQUIRED FIELD CIRCUITING REQUIRED UNDER THIS CONTRACT. REFERENCE SUBMITTAL DOCUMENTATION FOR ALL PANEL INTERNAL COMPONENTS. CONTRACTOR TO PROVIDE ADDITIONAL INTERNAL CONTACTS AND JUMPERS PER CONTROL PANEL MANUFACTURERS RECOMMENDATIONS FOR AN OVERALL COMPLETE AND OPERABLE SYSTEM.
3. DISCONNECT SIZE SHOWN FOR BIDDING PURPOSES ONLY. COORDINATE DISCONNECT SIZE WITH EQUIPMENT MANUFACTURERS RECOMMENDATIONS. COORDINATE CONDUCTOR/CONDUIT SIZE WITH MANUFACTURERS RECOMMENDED SIZE. ALL REQUIREMENTS TO BE PER NEC.
4. REFER TO ELECTRICAL DETAILS FOR ADDITIONAL INFORMATION/REQUIREMENTS. CLOSELY COORDINATE FINAL PENETRATION LOCATIONS/REQUIREMENTS WITH APPLICABLE CONTRACTOR, OWNER, AND ENGINEER. TYPICAL.
5. PROVIDE CONDUIT BUSHING, FITTING, OR FLEX CONNECTION AS REQUIRED FOR PROPER CONNECTION OF DEVICE. ALL BUSHINGS, FITTINGS, OR FLEX CONNECTIONS TO BE SUITED FOR ENVIRONMENT INSTALLED WITHIN, INCLUDING BUT NOT LIMITED TO, HAZARDOUS ENVIRONMENTS, CORROSIVE ENVIRONMENTS, AND OUTDOOR INSTALLATIONS. COORDINATE WITH APPLICABLE CONTRACTOR AND EQUIPMENT MANUFACTURER. FLEX CONNECTION LENGTHS TO BE MINIMIZED TO GREATEST EXTENT POSSIBLE. TYPICAL.
6. FACTORY CABLE. THIS CONTRACT RESPONSIBLE FOR ALL TERMINATIONS PER MANUFACTURERS RECOMMENDATIONS. PROVIDE 1" CONDUIT WHERE EXPOSED TO PHYSICAL DAMAGE AND RECOMMENDED BY THE EQUIPMENT MANUFACTURER. CONDUIT SIZE IS LISTED AS MINIMUM. PROVIDE LARGER AS REQUIRED PER MANUFACTURER. COORDINATE FINAL INSTALLATION REQUIREMENTS WITH MANUFACTURER.
7. (2)#18STP, 3/4"C
8. (4)#14, 3/4"C
9. (2)#10 & #10G, 1"C.
10. (6)#14, 3/4"C. CIRCUIT TO BE UTILIZED FOR THE ASSOCIATED MOTOR THERMAL SAFETY AND SEAL LEAK SWITCH. CIRCUIT TO CONTROL TERMINALS OF PROPOSED VFD. IN THE EVENT OF A MOTOR HIGH TEMPERATURE OR SEAL LEAKAGE, THE UNIT IS TO BE SHUT DOWN TO PREVENT DAMAGE. NOTE, TWO CONDUCTORS TO BE UTILIZED AS SPARES.
11. AREA IS A CLASS I DIVISION II GROUP D SPACE. ALL WIRING METHODS TO COMPLY WITH NEC ARTICLE 501. ALL ELECTRICAL EQUIPMENT AND DEVICES INTERIOR TO THIS SPACE TO BE EXPLOSION PROOF RATED FOR USE IN A CLASS I DIVISION II GROUP D ENVIRONMENT.
12. AREA IS A CLASS I DIVISION I GROUP D SPACE WITHIN 18" ENVELOPE ABOVE WATER SURFACE AND HORIZONTALLY FROM WETTED WALLS. ALL WIRING METHODS TO COMPLY WITH NEC ARTICLE 501. ALL ELECTRICAL EQUIPMENT AND DEVICES INTERIOR TO THIS SPACE TO BE EXPLOSION PROOF RATED FOR USE IN A CLASS I DIVISION II GROUP D ENVIRONMENT.
13. (3)#10 & #10G, 1"C
14. CONTRACTOR TO BOND TO BUILDING/STRUCTURE GROUND SYSTEM. UTILIZE #4 COPPER GROUND CONDUCTOR UNLESS OTHERWISE NOTED. REFER TO ELECTRICAL DETAILS FOR ADDITIONAL INFORMATION/REQUIREMENTS.
15. (3)#10 & #10G, 1"C. PROVIDE AS VFD SHIELDED CABLE. CONDUIT SIZE IS LISTED AS MINIMUM, PROVIDE LARGER DIAMETER AS REQUIRED PER MANUFACTURER. REFER TO SPECIFICATIONS FOR ADDITIONAL INFORMATION. ALL REQUIREMENTS TO BE PER NEC.
16. (4)#14, 3/4"C. CIRCUIT TO BE UTILIZED FOR THE ASSOCIATED MOTOR THERMAL SAFETY SWITCH. CIRCUIT TO CONTROL TERMINALS OF PROPOSED STARTER. IN THE EVENT OF A MOTOR HIGH TEMPERATURE, THE UNIT IS TO BE SHUT DOWN TO PREVENT DAMAGE. NOTE, TWO CONDUCTORS TO BE UTILIZED AS SPARES.
17. (12)#14 & (2)#18STP, 1"C.
18. CAT 6 CABLE, 1"C.
19. CONTRACTOR RESPONSIBLE TO RESTORE ALL DISTURBED SURFACES AS PART OF THIS CONTRACT. COORDINATE FINAL REQUIREMENTS WITH THE OWNER AND ENGINEER. REFER TO TYPICAL DUCT BANK SECTION DETAILS FOR ADDITIONAL INFORMATION/REQUIREMENTS.
20. CONTRACTOR TO COORDINATE FINAL DUCT BANK ROUTING/REQUIREMENTS WITH EXISTING FIELD CONDITIONS, PROPOSED WORK, OWNER AND ENGINEER PRIOR TO ROUGH-IN TO AVOID CONFLICTS.

MHE ENGINEERING
33 Airport Center Drive, Suite 202
New Windsor, NY 12553
(845) 567-3100
111 Wheatfield Drive, Suite 1
Milford, PA 18337
(570) 296-2765

BID ADDENDUM

JADE STONE ENGINEERING

STATE OF NEW YORK — JEFFREY E. ROBINSON — 095896 — LICENSED PROFESSIONAL ENGINEER

HAZARDOUS MATERIAL NOTE:
THE SERVICES PROVIDED BY MHE, INCLUDING ALL WORK DEPICTED ON MHE PLANS, DO NOT INCLUDE SERVICES RELATED TO THE IDENTIFICATION, CONTROLS OR HANDLING OF HAZARDOUS MATERIALS, INCLUDING SUCH MATERIALS AS ASBESTOS AND LEAD PAINT. ALL TESTING, IDENTIFICATION, ABATEMENT, CONTROLS, AND HANDLING OF HAZARDOUS MATERIALS SHALL BE UNDERTAKEN BY A HAZARDOUS MATERIAL CONSULTANT AND CERTIFIED PROFESSIONALS. IF SUCH MATERIALS HAVE BEEN IDENTIFIED, CONTRACTOR WILL COMMUNICATE DIRECTLY WITH HAZARDOUS MATERIAL PROFESSIONAL FOR THE PERFORMANCE OF ANY WORK ON OR ADJACENT TO SAID MATERIALS. IF UNIDENTIFIED MATERIALS OF CONCERN ARE ENCOUNTERED WHILE UNDERTAKING THE WORK SHOWN HEREON, CONTRACTOR SHALL IMMEDIATELY NOTIFY ENGINEER AND OWNER, AND SHALL OBTAIN DIRECTION FROM THE HAZARDOUS MATERIAL CONSULTANT PRIOR TO THE CONTINUATION OF WORK INVOLVING SUSPECTED MATERIAL.

UDIG·NY SAFE DIGGING STARTS HERE
CALL 811

UNAUTHORIZED ADDITION OR ALTERATION OF THIS PLAN IS A VIOLATION OF SECTION 7209(2) OF THE NEW YORK STATE EDUCATION LAW.

ALL PRODUCTION & INTELLECTUAL PROPERTY RIGHT RESERVED ©

CAESARS LANE WWTP EXPANSION PROJECT: PHASE 2
145 CAESARS LN.
NEW WINDSOR, NY 12553
FOR TOWN OF NEW WINDSOR
555 UNION AVE.
NEW WINDSOR, NY 12553

ELECTRICAL RISER DIAGRAMS

REVISIONS

NO.	DESCRIPTION	DATE

ISSUED DATE:	06 JUNE, 2025
DESIGN BY:	RRM
DRAWN BY:	CDJ
CHECKED BY:	MGR
REVIEWED BY:	JER

SHEET NO.
E-026

PROJECT # 18-732 PHASE #

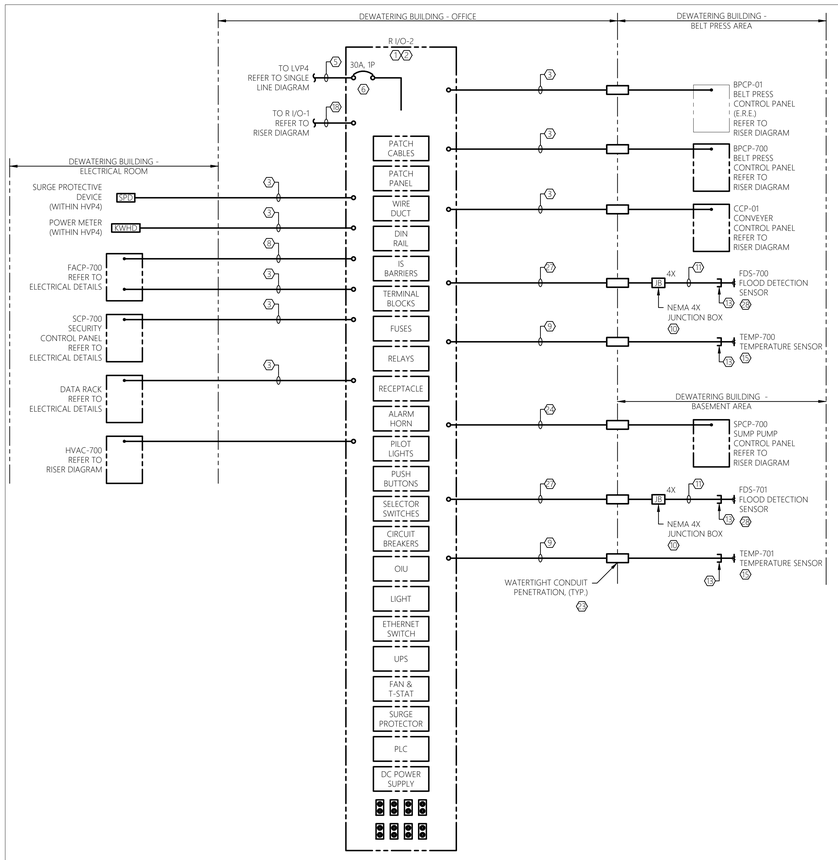

1 E-027 REMOTE I/O PANEL #2 RISER DIAGRAM
SCALE: NTS — DEWATERING BUILDING

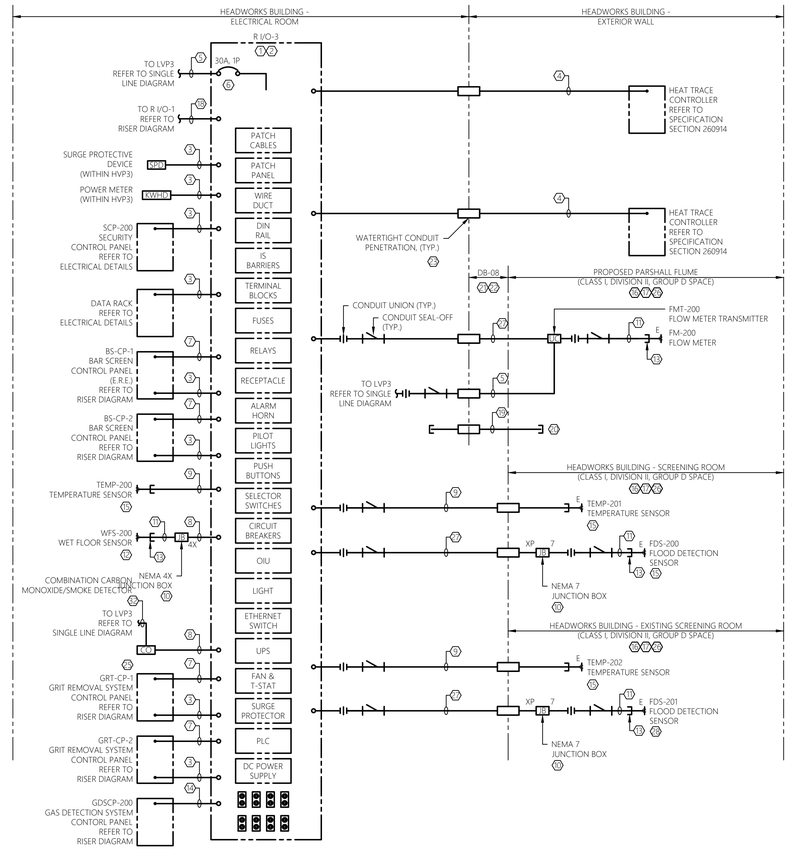

2 E-027 REMOTE I/O PANEL #3 RISER DIAGRAM
SCALE: NTS — HEADWORKS BUILDING

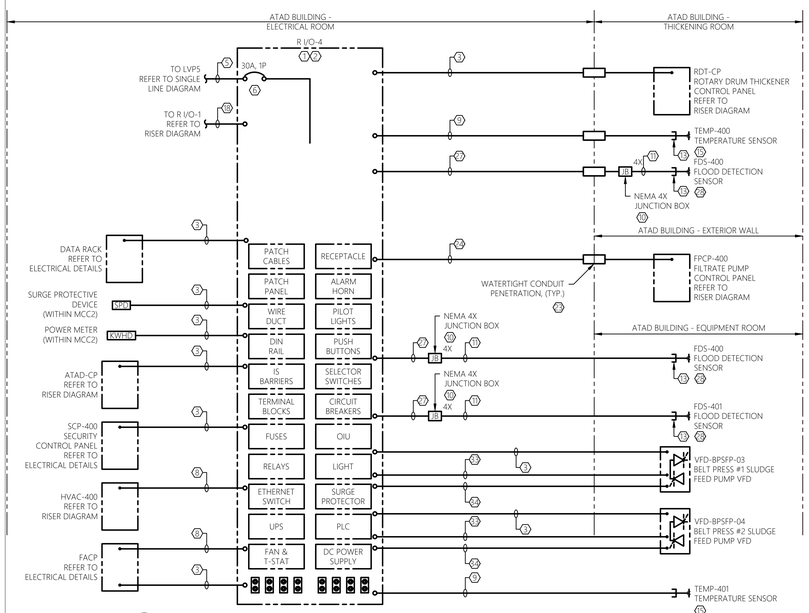

3 E-027 REMOTE I/O PANEL #4 RISER DIAGRAM
SCALE: NTS — ATAD BUILDING

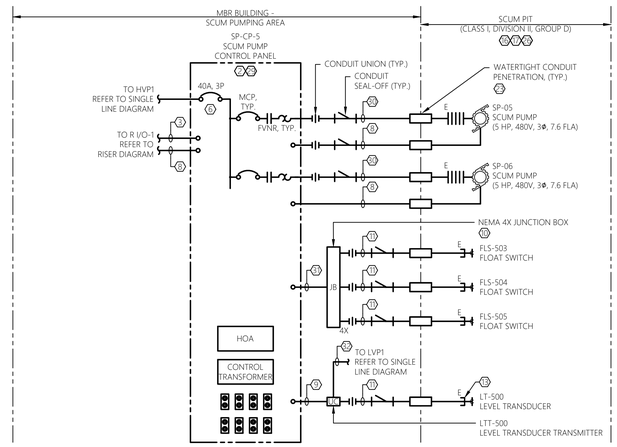

5 E-026 SCUM PUMP CONTROL PANEL RISER DIAGRAM
SCALE: NTS — MBR BUILDING

GENERAL SHEET NOTES:

1. REFER TO E-001 FOR ELECTRICAL LEGENDS, ABBREVIATIONS AND GENERAL PROJECT NOTES.
2. PROVIDE GROUNDING PER NEC FOR ALL ELECTRICAL EQUIPMENT AND ASSOCIATED EQUIPMENT.
3. ALL CONDUCTORS, EQUIPMENT, COMPONENTS, AND DEVICES NOT SHOWN FOR CLARITY. COORDINATE WITH ALL PRIME CONTRACTORS AND PROVIDE COMPLETE ELECTRICAL CIRCUITING FOR ALL INSTALLED EQUIPMENT. ALL REQUIREMENTS TO BE PER NEC.
4. REFER TO ELECTRICAL PLANS FOR GENERAL DEVICE/EQUIPMENT LOCATIONS. COORDINATE FINAL LOCATIONS WITH ALL PRIME CONTRACT DRAWINGS. REFER TO ELECTRICAL SITE PLAN FOR DUCT BANK INFORMATION
5. REFER TO SINGLE LINE DIAGRAMS, SPECIFICATIONS, AND SUBMITTAL DOCUMENTATION FOR ADDITIONAL INFORMATION/REQUIREMENTS.
6. CONTRACTOR TO COORDINATE ALL ASPECTS OF SEQUENCE OF CONSTRUCTION WITH OWNER AND ALL OTHER TRADE CONTRACTORS.
7. CIRCUITS SHOWN ARE POWER, CONTROL, INSTRUMENTATION, AND CONTROL CIRCUIT POWER. REFER TO SINGLE LINE DIAGRAMS, SCHEDULES, AND DETAILS FOR ADDITIONAL CIRCUITS.
8. ALL WIRING REQUIREMENTS INCLUDING BUT NOT LIMITED TO WIRE SIZE, TYPE, AND QUANTITY OF CONDUCTORS TO BE VERIFIED WITH EQUIPMENT MANUFACTURER.
9. QUANTITY OF CONDUCTORS CALLED FOR MAY INCLUDE SPARE CONDUCTORS. PROVIDE CONDUCTORS SHOWN OR MINIMUM NUMBER REQUIRED PER MANUFACTURERS WRITTEN INSTRUCTIONS. ALL REQUIREMENTS TO BE PER NEC.
10. CONTRACTOR TO PROVIDE ARC FLASH WARNING LABELS FOR ALL NEW OR MODIFIED ELECTRICAL EQUIPMENT. REFER TO SPECIFICATIONS FOR REQUIREMENTS.
11. REFER TO ELECTRICAL DETAIL SHEETS AND SCHEDULE SHEETS FOR ADDITIONAL INFORMATION/REQUIREMENTS.
12. CONTRACTOR TO COORDINATE MOUNTING LOCATIONS OF ALL PANELS WITH OWNER AND ALL OTHER TRADE CONTRACTORS. PROVIDE ALL NECESSARY MOUNTING HARDWARE, BRACKETS, ACCESSORIES, ETC.
13. PROVIDE INTRINSICALLY SAFE BARRIERS AS REQUIRED INTERNAL TO CONTROL PANELS. ALL REQUIREMENTS TO BE PER NEC.
14. NOT ALL REQUIRED CLASSIFIED SPACE WIRING METHODS INCLUDING, BUT NOT LIMITED TO SEAL-OFFS MAY BE SHOWN. PROVIDE WIRING METHODS PER NEC (LATEST EDITION). PROVIDE CONDUIT UNION WITHIN 6" OF EACH SEAL-OFF AT CONTROL PANELS, DISTRIBUTION PANELS, VFDS, STARTERS, DISCONNECTS, OR SOURCE OF SUPPLY WHERE FEASIBLE.
15. NOT ALL REQUIRED THRU-WALL, WATERTIGHT, CONDUIT PENETRATIONS SHOWN FOR CLARITY. CONTRACTOR TO PROVIDE A THRU-WALL, WATERTIGHT, CONDUIT PENETRATION FOR ALL CONDUIT PENETRATIONS WITHIN BUILDING INTERIOR/EXTERIOR WALLS AND FLOORS. REFER TO ELECTRICAL DETAILS FOR ADDITIONAL INFORMATION. COORDINATE WITH OWNER AND ALL OTHER TRADE CONTRACTORS PRIOR TO ROUGH-IN
16. CONTRACTOR TO COORDINATE ALL CONDUIT PENETRATIONS AND CONDUIT ROUTING WITH ALL OTHER TRADE CONTRACTORS AND OWNER PRIOR TO ROUGH-IN.
17. ALL CONDUCTORS TO BE COPPER AND CONTAIN XHHW-2 INSULATION.
18. ALL PROPOSED EQUIPMENT LOCATIONS/INSTALLATIONS TO COMPLY WITH NEC ARTICLE 110.26 'SPACES ABOUT ELECTRICAL EQUIPMENT'.

SHEET KEY NOTES:

1. CONTROL PANEL AND ALL INTERNAL COMPONENTS TO BE FURNISHED BY CONTRACTOR THRU BID ALLOWANCE #1. THIS CONTRACT IS RESPONSIBLE FOR ALL FIELD WIRING BETWEEN DEVICES, AND MOUNTING/INSTALLATION/WIRING OF PANEL AS SHOWN/INDICATED. REFER TO SUBMITTAL DOCUMENTATION AND COORDINATE WITH OWNER AND ENGINEER TO PROVIDE COMPLETE SYSTEM FIELD CIRCUITRY AND TERMINATIONS AS REQUIRED FOR A COMPLETE AND OPERABLE SYSTEM.
2. NOT ALL INTERNAL COMPONENTS SHOWN FOR CLARITY. DIAGRAM IS INTENDED TO SHOW ALL REQUIRED FIELD CIRCUITING REQUIRED UNDER THIS CONTRACT. REFERENCE SUBMITTAL DOCUMENTATION AND SPECIFICATION SECTION 260912 CONTROL PANELS AND INTEGRATION FOR ALL PANEL INTERNAL COMPONENTS.
3. (1) CAT 6A PREMIUM ETHERNET CABLE, 1"C. PROVIDE AS PLENUM RATED WITH 4 BONDED PAIRS. TO BE BELDEN #3633 OR APPROVED EQUAL.
4. (12)#14 & (2)#18STP, 1"C.
5. (2)#10 & #10G, 1"C.
6. DISCONNECT SIZE SHOWN FOR BIDDING PURPOSES ONLY. COORDINATE DISCONNECT SIZE WITH EQUIPMENT MANUFACTURERS RECOMMENDATIONS. COORDINATE CONDUCTOR/CONDUIT SIZE WITH MANUFACTURERS RECOMMENDED DISCONNECT SIZE. ALL REQUIREMENTS TO BE PER NEC..
7. (24)#14 & (4)#18STP, 1-1/2"C.
8. (4)#14, 3/4"C
9. (2)#18STP, 3/4"C
10. CONTRACTOR TO PROVIDE JUNCTION/PULL BOXES FOR SPLICING, OR EXTENDING CIRCUITRY AS REQUIRED. PROVIDE NECESSARY TERMINAL STRIPS, OR SPLICE KITS WITHIN JUNCTION BOX TO EXTEND CIRCUITRY AS SHOWN. (NOTE, JUNCTION BOXES ARE NOT ALWAYS SHOWN ON FLOOR PLANS. CONTRACTOR TO FIELD LOCATE AS NECESSARY). JUNCTION BOXES ARE TO BE RATED FOR ENVIRONMENT INSTALLED, INCLUDING BUT NOT LIMITED TO HAZARDOUS ENVIRONMENTS, CORROSIVE ENVIRONMENTS, AND OUTDOOR INSTALLATIONS. CONTRACTOR TO FIELD VERIFY AND COORDINATE CONDUIT ARRANGEMENT ENTERING/LEAVING JUNCTION BOX AS REQUIRED. CONTRACTOR TO SIZE JUNCTION BOXES PER NEC ARTICLE 314. JUNCTION BOXES TO BE MANUFACTURED BY EATON, OR APPROVED EQUAL. TYPICAL OF ALL JUNCTION BOXES SHOWN ON THIS DRAWING.
11. FACTORY CABLE. THIS CONTRACT RESPONSIBLE FOR ALL TERMINATIONS PER MANUFACTURERS RECOMMENDATIONS. PROVIDE 1" CONDUIT WHERE EXPOSED TO PHYSICAL DAMAGE AND RECOMMENDED BY THE EQUIPMENT MANUFACTURER. CONDUIT SIZE IS LISTED AS MINIMUM. PROVIDE LARGER AS REQUIRED PER MANUFACTURER. COORDINATE FINAL INSTALLATION REQUIREMENTS WITH MANUFACTURER.
12. WET FLOOR SENSOR TO BE PROVIDED AS PART OF BID ALLOWANCE #1. PROVIDE AS WINLAND ELECTRONICS, WATERBUG WB200, OR APPROVED EQUAL.
13. PROVIDE CONDUIT BUSHING, FITTING, OR FLEX CONNECTION AS REQUIRED FOR PROPER CONNECTION OF DEVICE. ALL BUSHINGS, FITTINGS, OR FLEX CONNECTIONS TO BE SUITED FOR ENVIRONMENT INSTALLED WITHIN, INCLUDING BUT NOT LIMITED TO, HAZARDOUS ENVIRONMENTS, CORROSIVE ENVIRONMENTS, AND OUTDOOR INSTALLATIONS. COORDINATE WITH APPLICABLE CONTRACTOR AND EQUIPMENT MANUFACTURER. FLEX CONNECTION LENGTHS TO BE MINIMIZED TO GREATEST EXTENT POSSIBLE. TYPICAL.
14. (24)#14 & (12)#18STP, 1-1/2"C.
15. TEMPERATURE SENSOR TO BE PROVIDED AS OMEGA EWS-TX SERIES WALL MOUNT SENSOR, OR APPROVED EQUAL THRU BID ALLOWANCE #1. PROVIDE AS OMEGA OSAT SERIES WITHIN CLASSIFIED AREAS. PROVIDE ELECTRICAL BOX, 24V DC POWER SUPPLY, CIRCUITRY (CONDUIT AND CONDUCTORS), WALL PLATE, AND MOUNTING BRACKETS AS REQUIRED FOR AN OVERALL COMPLETE AND OPERABLE ROOM TEMPERATURE SENSING DEVICE PER MANUFACTURER'S RECOMMENDATIONS. REFER TO SPECIFICATION SECTION 260912 CONTROL PANELS AND INTEGRATION FOR ADDITIONAL INFORMATION/REQUIREMENTS. PROVIDE LABEL PER SPECIFICATION SECTION 260553 IDENTIFICATION FOR ELECTRICAL SYSTEMS.
16. AREA IS A CLASSIFIED SPACE. ALL WIRING METHODS WITHIN THIS SPACE TO COMPLY WITH NEC ARTICLE 501. ALL ELECTRICAL EQUIPMENT AND DEVICES WITHIN THIS SPACE TO BE EXPLOSION PROOF RATED FOR USE IN A CLASSIFIED GROUP D ENVIRONMENT. REFER TO NFPA 820 TABLE FOR ADDITIONAL INFORMATION/REQUIREMENTS. NOTE, NOT ALL REQUIRED SEAL-OFFS SHOWN FOR CLARITY. PROVIDE PER NEC.
17. ALL ELECTRICAL EQUIPMENT, COMPONENTS, DEVICES, AND RACEWAY SYSTEMS TO BE KEPT OUT OF CLASSIFIED AREAS TO GREATEST EXTENT POSSIBLE.
18. 8-STRAND, MULTI-MODE (50 MICRON CORE / 125 MICRON CLADDING DIAMETER), FIBER OPTIC CABLE, 4"C. PROVIDE MAXCELL FABRIC INNERDUCT WITHIN 4" CONDUIT. PROVIDE AS MAXCELL 4" 3-CELL PRODUCT. INSTALL PROPOSED FIBER OPTIC CABLE WITHIN 1-CELL OF THE PROPOSED INNERDUCT AND A PULL STRING THROUGH THE OTHER TWO (2) CELLS. FIBER OPTIC CABLE TO BE CONTINUOUS (NO SPLICE) AND SUITABLE FOR INDOOR/OUTDOOR APPLICATIONS ALONG WITH SUITABLE FOR DIRECT BURIAL APPLICATIONS. FIBER OPTIC CABLE TO BE MODEL CLEARCURVE AS MANUFACTURED BY CORNING OR APPROVED EQUAL. SUBMIT PRODUCT DATA TO ENGINEER FOR REVIEW DURING SUBMITTAL PHASE. REFER TO SPECIFICATIONS FOR ADDITIONAL INFORMATION/REQUIREMENTS.
19. SPARE 2"C.
20. PROVIDE SPARE CONDUIT AS SHOWN. STUB CONDUIT ADJACENT TO EQUIPMENT, OR AS DIRECTED BY THE OWNER. PROVIDE PULL ROPE AND CAP BOTH ENDS. CONTRACTOR TO PROVIDE LABEL FOR ALL SPARE CONDUITS INDICATING CONDUIT DESTINATION. REFER TO SPECIFICATIONS FOR ADDITIONAL INFORMATION/REQUIREMENTS.
21. CONTRACTOR RESPONSIBLE TO RESTORE ALL DISTURBED SURFACES AS PART OF THIS CONTRACT. COORDINATE FINAL REQUIREMENTS WITH THE OWNER AND ENGINEER. REFER TO TYPICAL DUCT BANK SECTION DETAILS FOR ADDITIONAL INFORMATION/REQUIREMENTS.
22. CONTRACTOR TO COORDINATE FINAL DUCT BANK ROUTING/REQUIREMENTS WITH EXISTING FIELD CONDITIONS, PROPOSED WORK, OWNER AND ENGINEER PRIOR TO ROUGH-IN TO AVOID CONFLICTS.
23. REFER TO ELECTRICAL DETAILS FOR ADDITIONAL INFORMATION/REQUIREMENTS. CLOSELY COORDINATE FINAL PENETRATION LOCATIONS/REQUIREMENTS WITH APPLICABLE CONTRACTOR, OWNER, AND ENGINEER. TYPICAL.
24. (6)#14, 3/4"C.
25. CONTRACTOR TO PROVIDE COMBINATION CARBON MONOXIDE/SMOKE DETECTOR MODEL GN-503F AS MANUFACTURED BY GENTEX OR APPROVED EQUAL. DETECTOR TO BE 120V POWERED BY BUILDING ELECTRICAL SYSTEM, CONTAIN BATTERY BACKUP, AND BE UL LISTED. DETECTOR TO FEATURE ONE (1) SET OF CONTACTS THAT ACTIVATE UPON DETECTION OF SMOKE, OR CARBON MONOXIDE. INSTALL ON WALL/CEILING PER MANUFACTURER'S RECOMMENDATIONS AND IN ACCORDANCE WITH NFPA 720.
26. ROUTING AND ATTACHMENT METHODS OF ALL CONDUITS WITHIN STRUCTURE ARE TO BE CLOSELY COORDINATED WITH APPLICABLE CONTRACTOR, OWNER, AND ENGINEER TO AVOID CONFLICTS. ALL RACEWAY TO BE PVC COATED RGS BY PLASTI-BOND, OR APPROVED EQUAL. ALL MOUNTING HARDWARE, BRACKETS, SUPPORTS, CHANNELS, FITTINGS, CLAMPS, ETC... TO BE A CORROSION RESISTANT PRODUCT LINE AS MANUFACTURED BY POWER-STRUT DEFENDER, OR APPROVED EQUAL. SUBMIT PRODUCT DATA TO ENGINEER DURING SUBMITTAL PHASE FOR APPROVAL. REFER TO RACEWAY SCHEDULE FOR ADDITIONAL INFORMATION.
27. (2)#18STP & (4)#14, 3/4"C
28. FLOOD DETECTION SENSOR TO BE PROVIDED AS PAINTEX CLS200 CAPACITANCE PROBE AS MANUFACTURED BY SIEMENS, OR APPROVED EQUAL THRU BID ALLOWANCE #1. PROVIDE ALL REQUIRED MOUNTING HARDWARE, BRACKETTS, ACCESSORIES, ETC... AND CIRCUITRY (CONDUIT AND CONDUCTORS) FOR AN OVERALL COMPLETE AND OPERABLE FLOOD DETECTION SYSTEM. REFER TO SPECIFICATION SECTION 260912 CONTROL PANELS AND INTEGRATION FOR ADDITIONAL INFORMATION/REQUIREMENTS. PROVIDE LABEL PER SPECIFICATION SECTION 260553 IDENTIFICATION FOR ELECTRICAL SYSTEMS.
29. CONTROL PANEL AND ALL INTERNAL COMPONENTS ARE BY THIS CONTRACT. THIS CONTRACT IS RESPONSIBLE FOR ALL FIELD WIRING BETWEEN DEVICES, AND MOUNTING/INSTALLATION OF PANEL AS SHOWN/INDICATED. REFER TO SUBMITTAL DOCUMENTATION AND COORDINATE WITH OWNER TO PROVIDE COMPLETE SYSTEM FIELD CIRCUITRY AND TERMINATIONS AS REQUIRED FOR A COMPLETE AND OPERABLE SYSTEM.
30. (3)#12 & #12G, 3/4" C.
31. (8)#14, 3/4" C.
32. (2)#12 & #12G, 3/4" C.
33. (12)#14, 3/4"C.
34. (4)#18STP, 3/4"C.

CONTROL DIAGRAMS ARE SCHEMATIC IN NATURE AND SHOWS ALL INTERCONNECTIONS. CONTRACTOR MAY GROUP POWER CIRCUITS INTO LARGER CONDUIT AND GROUP CONTROL CIRCUITS INTO SEPARATE LARGER CONDUIT. GROUPING OF CIRCUITS INTO LARGER CONDUITS MUST COMPLY WITH NEC FILL AND DERATING REQUIREMENTS. VFD INPUT & OUTPUT CONDUCTORS MUST BE RUN INDEPENDENT OF OTHER CONDUCTORS.

MHE ENGINEERING
33 Airport Center Drive, Suite 202
New Windsor, NY 12553
(845) 567-3100
111 Wheatfield Drive, Suite 1
Milford, PA 18337
(570) 296-2765

BID ADDENDUM

JADE STONE ENGINEERING

STATE OF NEW YORK — JEFFREY E. ROBINSON — 095896 — LICENSED PROFESSIONAL ENGINEER

HAZARDOUS MATERIAL NOTE:

THE SERVICES PROVIDED BY MHE, INCLUDING ALL WORK DEPICTED ON MHE PLANS, DO NOT INCLUDE SERVICES RELATED TO THE IDENTIFICATION, CONTROLS OR HANDLING OF HAZARDOUS MATERIALS, INCLUDING SUCH MATERIALS AS ASBESTOS AND LEAD PAINT. ALL TESTING, IDENTIFICATION, ABATEMENT, CONTROLS, AND HANDLING OF HAZARDOUS MATERIALS SHALL BE UNDERTAKEN BY A HAZARDOUS MATERIAL CONSULTANT AND CERTIFIED PROFESSIONALS. IF SUCH MATERIALS HAVE BEEN IDENTIFIED, CONTRACTOR WILL COMMUNICATE DIRECTLY WITH HAZARDOUS MATERIAL PROFESSIONAL FOR THE PERFORMANCE OF ANY WORK ON OR ADJACENT TO SAID MATERIALS. IF UNIDENTIFIED MATERIALS OF CONCERN ARE ENCOUNTERED WHILE UNDERTAKING THE WORK SHOWN HEREON, CONTRACTOR SHALL IMMEDIATELY NOTIFY ENGINEER AND OWNER, AND SHALL OBTAIN DIRECTION FROM THE HAZARDOUS MATERIAL CONSULTANT PRIOR TO THE CONTINUATION OF WORK INVOLVING SUSPECTED MATERIAL.

UDIG·NY SAFE DIGGING STARTS HERE CALL 811

UNAUTHORIZED ADDITION OR ALTERATION OF THIS PLAN IS A VIOLATION OF SECTION 7209(2) OF THE NEW YORK STATE EDUCATION LAW.

ALL PRODUCTION & INTELLECTUAL PROPERTY RIGHT RESERVED ©

CAESARS LANE WWTP EXPANSION PROJECT: PHASE 2
145 CAESARS LN.
NEW WINDSOR, NY 12553
FOR TOWN OF NEW WINDSOR
555 UNION AVE.
NEW WINDSOR, NY 12553

ELECTRICAL RISER DIAGRAMS

REVISIONS

NO.	DESCRIPTION	DATE

ISSUED DATE:	06 JUNE, 2025
DESIGN BY:	RRM
DRAWN BY:	CDJ
CHECKED BY:	MGR
REVIEWED BY:	JER
SHEET NO.	E-027
PROJECT # 18-732	PHASE #

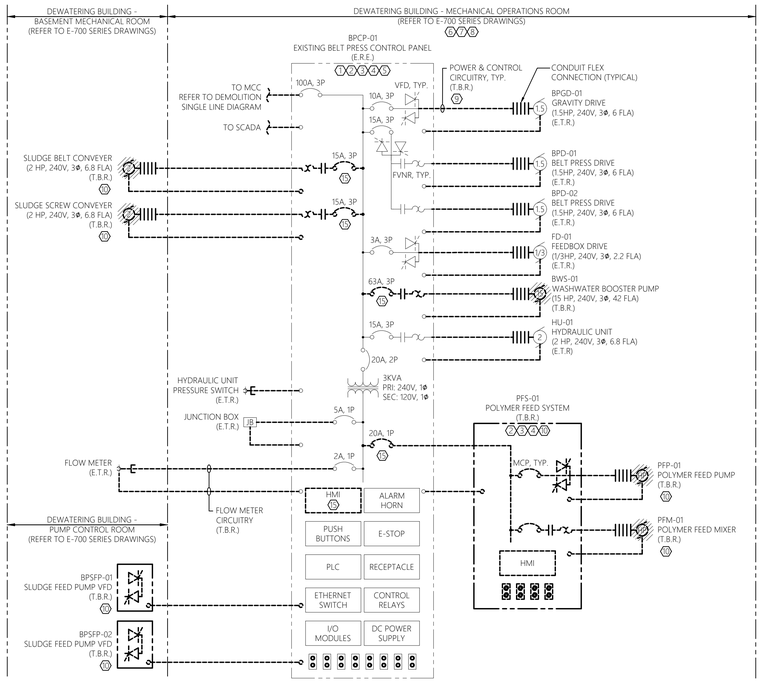

1 E-028 EXISTING BELT FILTER PRESS CONTROL PANEL RISER DIAGRAM - DEMOLITION
SCALE: NTS DEWATERING BLDG

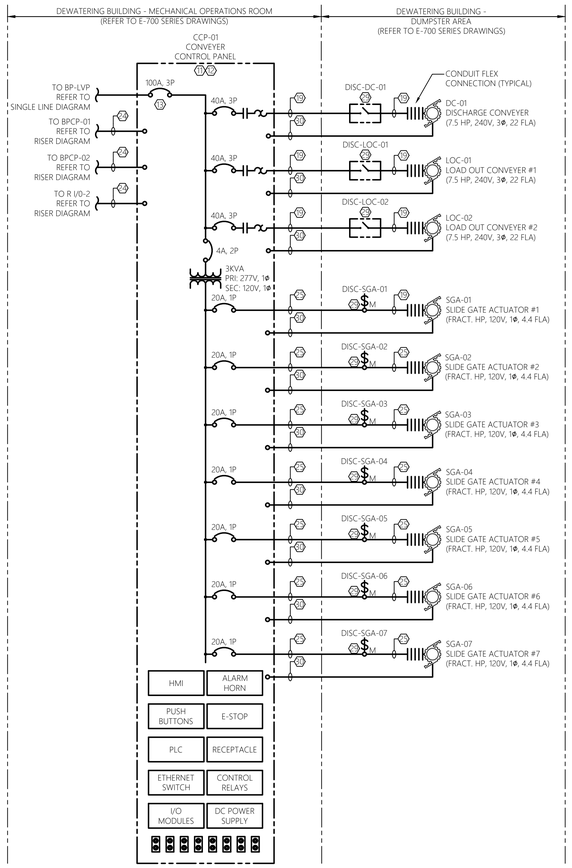

1 E-028 CONVEYER CONTROL PANEL RISER DIAGRAM
SCALE: NTS DEWATERING BLDG

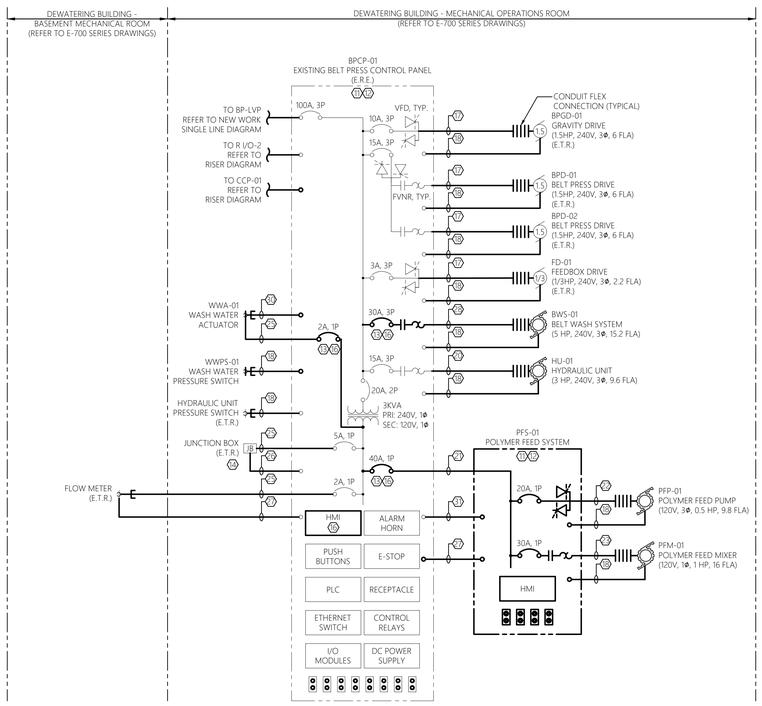

1 E-028 EXISTING BELT FILTER PRESS CONTROL PANEL RISER DIAGRAM - NEW WORK
SCALE: NTS DEWATERING BLDG

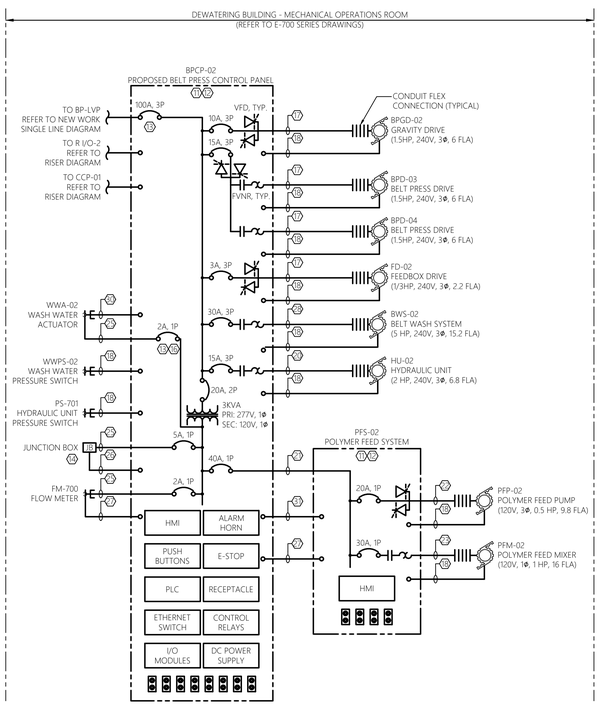

1 E-028 PROPOSED BELT FILTER PRESS CONTROL PANEL RISER DIAGRAM
SCALE: NTS DEWATERING BLDG

GENERAL SHEET NOTES:

1. REFER TO E-001 FOR ELECTRICAL LEGENDS, ABBREVIATIONS AND GENERAL PROJECT NOTES.
2. PROVIDE GROUNDING PER NEC FOR ALL ELECTRICAL EQUIPMENT AND ASSOCIATED EQUIPMENT.
3. ALL CONDUCTORS NOT SHOWN FOR CLARITY. COORDINATE WITH OTHER TRADE CONTRACTORS AND PROVIDE COMPLETE ELECTRICAL CIRCUITING FOR ALL INSTALLED EQUIPMENT. ALL REQUIREMENTS TO BE PER NEC.
4. REFER TO FLOOR PLANS FOR GENERAL DEVICE/EQUIPMENT LOCATIONS. COORDINATE FINAL LOCATIONS WITH PROCESS MECHANICAL DRAWINGS. REFER TO SITE PLAN FOR DUCT BANK INFORMATION AS REQUIRED.
5. REFER TO SINGLE LINE DIAGRAMS, SPECIFICATIONS, AND SUBMITTAL DOCUMENTATION FOR ADDITIONAL INFORMATION/REQUIREMENTS.
6. CONTRACTOR TO COORDINATE ALL ASPECTS OF SEQUENCE OF CONSTRUCTION WITH OWNER ALL OTHER TRADE CONTRACTORS.
7. CIRCUITS SHOWN ARE POWER, CONTROL, INSTRUMENTATION, AND CONTROL CIRCUIT POWER. REFER TO SINGLE LINE DIAGRAMS, SCHEDULES, AND DETAILS FOR ADDITIONAL CIRCUITS.
8. ALL WIRING REQUIREMENTS INCLUDING BUT NOT LIMITED TO WIRE SIZE, TYPE, AND QUANTITY OF CONDUCTORS TO BE VERIFIED WITH EQUIPMENT MANUFACTURER.
9. QUANTITY OF CONDUCTORS CALLED FOR MAY INCLUDE SPARE CONDUCTORS. PROVIDE CONDUCTORS SHOWN OR MINIMUM NUMBER REQUIRED PER MANUFACTURERS WRITTEN INSTRUCTIONS. ALL REQUIREMENTS TO BE PER NEC.
10. CONTRACTOR TO PROVIDE ARC FLASH WARNING LABELS FOR ALL NEW OR MODIFIED ELECTRICAL EQUIPMENT. REFER TO SPECIFICATIONS FOR REQUIREMENTS.
11. REFER TO ELECTRICAL DETAIL SHEETS AND SCHEDULE SHEETS FOR ADDITIONAL INFORMATION/REQUIREMENTS.
12. CONTRACTOR TO COORDINATE MOUNTING LOCATIONS OF ALL PANELS WITH OWNER AND ALL OTHER TRADE CONTRACTORS. PROVIDE ALL NECESSARY MOUNTING HARDWARE, BRACKETS, ACCESSORIES, ETC..
13. PROVIDE INTRINSICALLY SAFE BARRIERS AS REQUIRED INTERNAL TO CONTROL PANELS. ALL REQUIREMENTS TO BE PER NEC.
14. NOT ALL REQUIRED CLASSIFIED SPACE WIRING METHODS INCLUDING, BUT NOT LIMITED TO SEAL-OFFS MAY BE SHOWN. PROVIDE WIRING METHODS PER NEC (LATEST EDITION). PROVIDE CONDUIT UNION WITHIN 6" OF EACH SEAL-OFF AT CONTROL PANELS, DISTRIBUTION PANELS, VFDS, STARTERS, DISCONNECTS, OR SOURCE OF SUPPLY WHERE FEASIBLE.
15. NOT ALL REQUIRED THRU-WALL, WATERTIGHT, CONDUIT PENETRATIONS SHOWN FOR CLARITY. CONTRACTOR TO PROVIDE A THRU-WALL WATERTIGHT, CONDUIT PENETRATION FOR ALL CONDUIT PENETRATIONS WITHIN BUILDING INTERIOR/EXTERIOR WALLS AND FLOORS. REFER TO ELECTRICAL DETAILS FOR ADDITIONAL INFORMATION. COORDINATE WITH OWNER AND ALL OTHER TRADE CONTRACTORS PRIOR TO ROUGH-IN
16. CONTRACTOR TO COORDINATE ALL CONDUIT PENETRATIONS AND CONDUIT ROUTING WITH ALL OTHER TRADE CONTRACTORS AND OWNER PRIOR TO ROUGH-IN.
17. ALL CONDUCTORS TO BE COPPER AND CONTAIN XHHW INSULATION.
18. ALL CONTROL/COMMUNICATION WIRING REQUIREMENTS INCLUDING BUT NOT LIMITED TO WIRE SIZE, TYPE, AND QUANTITY OF CONDUCTORS TO BE VERIFIED WITH EQUIPMENT MANUFACTURER.
19. ALL PROPOSED EQUIPMENT LOCATIONS/INSTALLATIONS TO COMPLY WITH NEC ARTICLE 110.26 'SPACES ABOUT ELECTRICAL EQUIPMENT'.

SHEET KEY NOTES:

1. CONTRACTOR TO DISCONNECT FROM POWER SOURCE AND ALL CONNECTED EQUIPMENT, MAKE ELECTRICALLY SAFE, AND RELOCATE EXISTING BELT PRESS CONTROL PANEL "BPCP-01" AS SHOWN ON E-700 SERIES DRAWINGS. EQUIPMENT TO BE REMOVED IS TO BECOME PROPERTY OF THE CONTRACTOR AND REMOVED FROM THE SITE IN ITS ENTIRETY. OWNER HAS THE RIGHT TO MAINTAIN ANY EQUIPMENT, COMPONENTS, DEVICES, CONTROLS, ETC... SCHEDULED FOR REMOVAL. REFER TO SPECIFICATIONS FOR ADDITIONAL INFORMATION AND COORDINATE FINAL REQUIREMENTS WITH APPLICABLE TRADE CONTRACTOR, OWNER, BELT PRESS CONTROL PANEL MANUFACTURE, AND ENGINEER.
2. NOT ALL ASSOCIATED CONTROLS, STARTERS, DISCONNECTS & CIRCUITRY MAY BE SHOWN FOR CLARITY. CONTRACTOR TO FIELD VERIFY AND COMPLETELY REMOVE ALL ASSOCIATED CONTROLS, STARTERS, DISCONNECTS, CONTROLS, CONTROLS CIRCUITRY (CONDUIT & CONDUCTORS), ALL MOUNTING HARDWARE, BRACKETS, ACCESSORIES, ETC... ASSOCIATED WITH EQUIPMENT/CIRCUITING SCHEDULED FOR REMOVAL. COORDINATE FINAL REQUIREMENTS WITH APPLICABLE TRADE CONTRACTOR, OWNER, BELT PRESS CONTROL PANEL MANUFACTURE, AND ENGINEER.
3. NOT ALL INTERNAL COMPONENTS SHOWN FOR CLARITY. DIAGRAM IS INTENDED TO SHOW ALL REQUIRED FIELD CIRCUITING AND EQUIPMENT TO BE REMOVED AS REQUIRED BY THE CONTRACTOR. CONTRACTOR TO REMOVE ANY EXISTING CIRCUITING ASSOCIATED WITH THE BELT PRESS SYSTEM. CLOSELY COORDINATE ALL REQUIREMENTS WITH APPLICABLE TRADE CONTRACTOR, OWNER, BELT PRESS CONTROL PANEL MANUFACTURE, AND ENGINEER.
4. REFER TO ELECTRICAL DEMOLITION PLANS, SCHEDULES AND DETAILS FOR ADDITIONAL DEMOLITION INFORMATION/REQUIREMENTS. CONTRACTOR TO COORDINATE ALL EQUIPMENT/CIRCUITING SCHEDULED FOR REMOVAL AND FINAL SEQUENCE OF REMOVAL REQUIREMENTS WITH APPLICABLE TRADE CONTRACTOR, OWNER, BELT PRESS CONTROL PANEL MANUFACTURE, AND ENGINEER PRIOR TO COMMENCEMENT OF DEMOLITION. CONTRACTOR TO FIELD VERIFY AND PROVIDE AS REQUIRED.
5. FOR EXISTING TO REMAIN EQUIPMENT, CONTRACTOR TO DISCONNECT, MAKE ELECTRICALLY SAFE, AND LABEL TO BE RECONNECTED AS SHOW ON NEW WORK.
6. WWTP IS TO BE OPERATIONAL AT ALL TIMES. PROVIDE TEMPORARY POWER PROVISIONS AS REQUIRED TO FACILITATE WWTP OPERATION DURING ELECTRICAL DEMOLITION AND INSTALLATION. PROVIDE ALL NECESSARY EQUIPMENT, DEVICES, CABLING, ETC... AS REQUIRED FOR AN OVERALL COMPLETE AND OPERABLE TEMPORARY POWER SYSTEM. CONTRACTOR TO MINIMIZE DOWN TIMES TO THE GREATEST EXTENT POSSIBLE. COORDINATE ALL REQUIREMENTS WITH APPLICABLE TRADE CONTRACTOR, OWNER, AND ENGINEER. REFER TO SPECIFICATIONS FOR ADDITIONAL INFORMATION REGARDING TEMPORARY POWER.
7. CONTRACTOR TO PROVIDE TEMPORARY POWER PLAN IN WRITING TO ENGINEER FOR APPROVAL PRIOR TO PERFORMING ELECTRICAL SERVICE DISRUPTIONS.
8. CONTRACTOR TO NOT COMMENCE ELECTRICAL DEMOLITION UNTIL TEMPORARY POWER PROVISIONS HAVE BEEN ESTABLISHED AND APPROVED BY THE ENGINEER. NOTE, IT IS THE INTENTION THAT THE NEW ELECTRICAL SERVICE BE INSTALLED, TESTED, AND OPERATIONAL BEFORE THE EXISTING ELECTRICAL SERVICE BE REMOVED.
9. CONTRACTOR TO REMOVE ALL POWER AND CONTROL CIRCUITRY (CONDUIT AND CONDUCTORS) IN IT'S ENTIRETY AS SHOWN. CONTRACTOR TO FIELD VERIFY.
10. CONTRACTOR TO DISCONNECT/REMOVE ALL POWER AND CONTROL CIRCUITRY (CONDUIT & CONDUCTORS) IN ITS ENTIRETY BACK TO SOURCE AS WELL AS DEMOLISH ASSOCIATED JUNCTION BOXES, DISCONNECTS, STARTERS, ASSOCIATED CONTROL DEVICES, ALL MOUNTING HARDWARE, BRACKETS, ACCESSORIES, ETC... ALL ITEMS REMOVED TO BECOME PROPERTY OF THE CONTRACTOR AND REMOVED FROM THE PROJECT SITE. CONTRACTOR TO FIELD VERIFY.
11. NOT ALL INTERNAL COMPONENTS SHOWN FOR CLARITY. DIAGRAM IS INTENDED TO SHOW ALL REQUIRED FIELD CIRCUITING AND TERMINATION REQUIRED BY THE CONTRACTOR. REFERENCE SUBMITTAL DOCUMENTATION FOR ALL PANEL INTERNAL COMPONENTS. CONTRACTOR TO PROVIDE ADDITIONAL INTERNAL COMPONENTS, CONTACTS, AND JUMPERS PER CONTROL PANEL MANUFACTURERS RECOMMENDATIONS FOR AN OVERALL COMPLETE AND OPERABLE SYSTEM. CLOSELY COORDINATE ALL REQUIREMENTS WITH ALL OTHER TRADE CONTRACTORS AND PANEL MANUFACTURE.
12. CONTROL PANEL AND ALL INTERNAL COMPONENTS (IF NOT EXISTING) ARE BY TO BE PROVIDED BY THE CONTRACTOR. CONTRACTOR IS RESPONSIBLE FOR ALL FIELD WIRING BETWEEN DEVICES, AND MOUNTING/INSTALLATION OF PANEL AS SHOWN/INDICATED. REFER TO SUBMITTAL DOCUMENTATION AND COORDINATE WITH APPLICABLE TRADE CONTRACTOR, OWNER, CONTROL PANEL MANUFACTURE, AND ENGINEER TO PROVIDE COMPLETE SYSTEM FIELD CIRCUITRY AND TERMINATIONS AS REQUIRED FOR A COMPLETE AND OPERABLE SYSTEM.
13. DISCONNECT SIZE SHOWN FOR BIDDING PURPOSES ONLY. COORDINATE DISCONNECT SIZE WITH EQUIPMENT MANUFACTURERS RECOMMENDATIONS. COORDINATE CONDUCTOR/CONDUIT SIZE WITH MANUFACTURERS RECOMMENDED DISCONNECT SIZE. ALL REQUIREMENTS TO BE PER NEC. TYPICAL.
14. COORDINATE TERMINATIONS OF CIRCUITRY AT BELT PRESS MANUFACTURE PROVIDED (IF NOT EXISTING) JUNCTION BOX CLOSELY WITH MANUFACTURER & OTHER TRADE CONTRACTORS.
15. COMPONENT INTERNAL TO CONTROL PANEL IS TO BE REMOVED BY BELT PRESS CONTROL PANEL MANUFACTURE. NOT ALL PROPOSED COMPONENTS INTERNAL TO CONTROL PANEL MAY BE SHOWN FOR CLARITY. COORDINATE WITH BELT PRESS CONTROL PANEL MANUFACTURE AS NEEDED.
16. COMPONENT INTERNAL TO CONTROL PANEL IS TO BE INSTALLED BY BELT PRESS CONTROL PANEL MANUFACTURE. NOT ALL PROPOSED COMPONENTS INTERNAL TO CONTROL PANEL MAY BE SHOWN FOR CLARITY. COORDINATE WITH BELT PRESS CONTROL PANEL MANUFACTURE AS NEEDED.
17. (3)#12 & #12G, 3/4"C. PROVIDE AS VFD SHIELDED CABLE. CONDUIT SIZE IS LISTED AS MINIMUM, PROVIDE LARGER DIAMETER AS REQUIRED PER MANUFACTURER. REFER TO SPECIFICATIONS FOR ADDITIONAL INFORMATION. ALL REQUIREMENTS TO BE PER NEC.
18. (4)#14, 3/4"C.
19. (3)#8 & #10G, 1"C.
20. (3)#12 & #12G, 3/4"C.
21. (2)#8 & #10G, 3/4"C.
22. (2)#12 & #12G, 3/4"C. PROVIDE AS VFD SHIELDED CABLE. CONDUIT SIZE IS LISTED AS MINIMUM, PROVIDE LARGER DIAMETER AS REQUIRED PER MANUFACTURER. REFER TO SPECIFICATIONS FOR ADDITIONAL INFORMATION. ALL REQUIREMENTS TO BE PER NEC.
23. (2)#10 & #10G, 3/4"C.
24. CAT 6 CABLE, 1"C.
25. (2)#12 & #12G, 3/4"C.
26. (20)#14, 1"C.
27. (2)#18STP, 3/4"C.
28. (3)#10 & #10G, 3/4"C.
29. REFER TO EQUIPMENT CONNECTION SCHEDULE FOR ADDITIONAL INFORMATION/REQUIREMENTS. TYPICAL.
30. (6)#14, 3/4"C.
31. (10)#14, 3/4"C.

CONTROL DIAGRAMS ARE SCHEMATIC IN NATURE AND SHOWS ALL INTERCONNECTIONS. CONTRACTOR MAY GROUP POWER CIRCUITS INTO LARGER CONDUIT AND GROUP CONTROL CIRCUITS INTO SEPARATE LARGER CONDUIT. GROUPING OF CIRCUITS INTO LARGER CONDUITS MUST COMPLY WITH NEC FILL AND DERATING REQUIREMENTS. VFD INPUT & OUTPUT CONDUCTORS MUST BE RUN INDEPENDENT OF OTHER CONDUCTORS.

MHE ENGINEERING
33 Airport Center Drive, Suite 202
New Windsor, NY 12553
(845) 567-3100
111 Wheatfield Drive, Suite 1
Milford, PA 18337
(570) 296-2765

BID ADDENDUM

JADE STONE ENGINEERING

STATE OF NEW YORK · JEFFREY E. ROBINSON · 095896 · LICENSED PROFESSIONAL ENGINEER

HAZARDOUS MATERIAL NOTE:
THE SERVICES PROVIDED BY MHE, INCLUDING ALL WORK DEPICTED ON MHE PLANS, DO NOT INCLUDE SERVICES RELATED TO THE IDENTIFICATION, CONTROLS OR HANDLING OF HAZARDOUS MATERIALS, INCLUDING SUCH MATERIALS AS ASBESTOS AND LEAD PAINT. ALL TESTING, IDENTIFICATION, ABATEMENT, CONTROLS, AND HANDLING OF HAZARDOUS MATERIALS SHALL BE UNDERTAKEN BY A HAZARDOUS MATERIAL CONSULTANT AND CERTIFIED PROFESSIONALS. IF SUCH MATERIALS HAVE BEEN IDENTIFIED, CONTRACTOR WILL COMMUNICATE DIRECTLY WITH HAZARDOUS MATERIAL PROFESSIONAL FOR THE PERFORMANCE OF ANY WORK ON OR ADJACENT TO SAID MATERIALS. IF UNIDENTIFIED MATERIALS OF CONCERN ARE ENCOUNTERED WHILE UNDERTAKING THE WORK SHOWN HEREON, CONTRACTOR SHALL IMMEDIATELY NOTIFY ENGINEER AND OWNER, AND SHALL OBTAIN DIRECTION FROM THE HAZARDOUS MATERIAL CONSULTANT PRIOR TO THE CONTINUATION OF WORK INVOLVING SUSPECTED MATERIAL.

UDIG·NY SAFE DIGGING STARTS HERE CALL 811

UNAUTHORIZED ADDITION OR ALTERATION OF THIS PLAN IS A VIOLATION OF SECTION 7209(2) OF THE NEW YORK STATE EDUCATION LAW.

ALL PRODUCTION & INTELLECTUAL PROPERTY RIGHT RESERVED ©

CAESARS LANE WWTP EXPANSION PROJECT: PHASE 2
145 CAESARS LN.
NEW WINDSOR, NY 12553
FOR TOWN OF NEW WINDSOR
555 UNION AVE.
NEW WINDSOR, NY 12553

ELECTRICAL RISER DIAGRAMS

REVISIONS

NO.	DESCRIPTION	DATE

ISSUED DATE:	06 JUNE, 2025
DESIGN BY:	RRM
DRAWN BY:	CDJ
CHECKED BY:	MGR
REVIEWED BY:	JER

SHEET NO.
E-028

PROJECT # 18-732 PHASE #

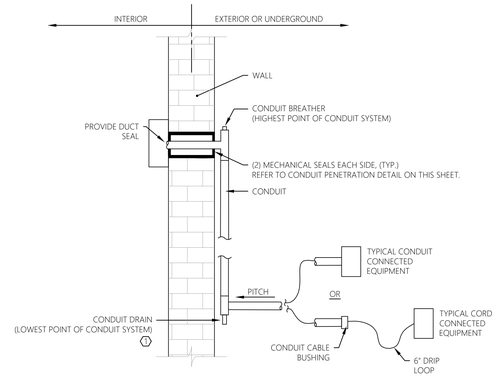

DRAIN ABOVE GRADE

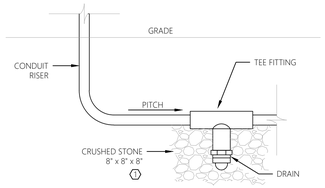

DRAIN BELOW GRADE

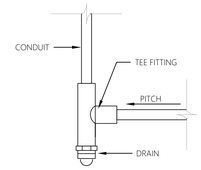

DRAIN ABOVE GRADE

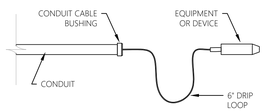

CORD/CABLE CONNECTED EQUIPMENT

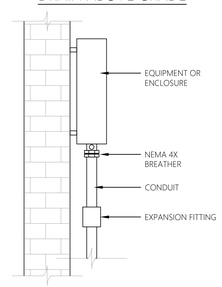

CONDUIT CONNECTED EQUIPMENT

GENERAL NOTES:

1. ALL CONDUIT SYSTEMS EXPOSED TO TEMPERATURE DIFFERENTIALS, IN POTENTIAL CONDENSING ATMOSPHERES, EXTERIOR INSTALLED, OR INSTALLED UNDERGROUND SHALL HAVE PROVISIONS FOR DRAINING WATER OUT OF CONDUIT SYSTEMS. PROVIDE DRAIN IN CONDUIT SYSTEMS AT LOW POINTS, LOW POINT SHALL NOT BE AT EQUIPMENT OR DEVICE. A BREATHER SHALL BE PROVIDED AT THE HIGH POINT OF THE SYSTEM.
2. ALL DRAIN FITTINGS TO BE STAINLESS STEEL AND ALL TEE FITTINGS TO BE OF RIGID GALVANIZED STEEL MATERIAL.
3. CONDENSATION PREVENTION - WHERE CONDUITS CROSS BARRIERS BETWEEN AREAS OF POTENTIAL SUBSTANTIAL TEMPERATURE DIFFERENTIAL, PROVIDE SEALING FITTING OR APPROVED SEALING COMPOUND AT AN ACCESSIBLE POINT NEAR THE PENETRATION TO PREVENT CONDENSATION. THIS INCLUDES, BUT IS NOT LIMITED TO:
   3.1. WHERE CONDUITS PASS FROM OUTDOORS INTO CONDITIONED INTERIOR SPACES.
   3.2. WHERE CONDUITS PASS FROM UNCONDITIONED INTERIOR SPACES INTO CONDITIONED INTERIOR SPACES.
4. CONTRACTOR TO FIELD VERIFY ALL UNDERGROUND CONDUIT DRAINS AND COORDINATE WITH THE OWNER/ENGINEER. ELEVATIONS TO BE COORDINATED SO THAT CONDUIT SYSTEMS DO NOT DRAIN TO EQUIPMENT/BUILDINGS.

KEY NOTES:

1. PROVIDE CRUSHED STONE (MIN. 8" x 8" x 8") WHERE LOWEST POINT IS LOCATED BENEATH GRADE.

1 E-030 TYPICAL CONDUIT DRAIN DETAILS
SCALE: NTS

GENERAL NOTES:

1. COORDINATE DUCT BANK REQUIREMENTS (IF ANY) FOR NEW SERVICE WITH THE UTILITY.
2. POWER AND CONTROL CONDUITS TO HAVE SEPARATION OF 12" MINIMUM
3. DETAIL IS TYPICAL AND MAY REFLECT CONDUITS NOT REQUIRED FOR PROJECT.
4. FINISHED SURFACE TO MATCH SURFACE BEING DISTURBED.
   - IN AREA OF GRASS: USE 4" TOP SOIL & SEEDING, AND COVER WITH MULCH.
   - IN ROADWAY OR NON-GRASS: USE COMPACTED 95% PROCTOR GRANULAR FILL.
5. CONTRACTOR TO UTILIZE CONDUIT SPACERS FOR ALL DUCT BANKS, NOT SHOWN ON DETAIL FOR CLARITY.

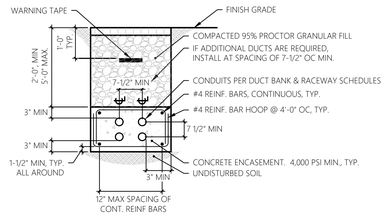

2 E-030 TYPICAL REINFORCED CONCRETE DUCT BANK SECTION DETAIL
SCALE: NTS

GENERAL NOTES:

1. BOND ALL NORMAL AND EMERGENCY EQUIPMENT TO GROUND SYSTEM.
2. DETAIL IS TYPICAL AND NOT ALL GROUNDING MAY BE SHOWN. SOME COMPONENTS SHOWN ON DETAIL MAY NOT BE PRESENT/APPLICABLE. PROVIDE ADDITIONAL GROUNDING AS REQUIRED PER A.250 (NEC).
3. REFER TO ELECTRICAL SINGLE LINE DIAGRAMS FOR GROUND CONDUCTOR SIZES. ALL REQUIREMENTS TO BE PER NEC.
4. ALL GROUNDING CONDUCTORS TO BE COPPER (UOI).

KEY NOTES:

1. NEUTRAL BONDING JUMPER ONLY PRESENT/APPLICABLE WITHIN MAIN SERVICE DISCONNECT. REMOVE NEUTRAL BONDING JUMPER FROM ALL OTHER DISTRIBUTION PANELS.

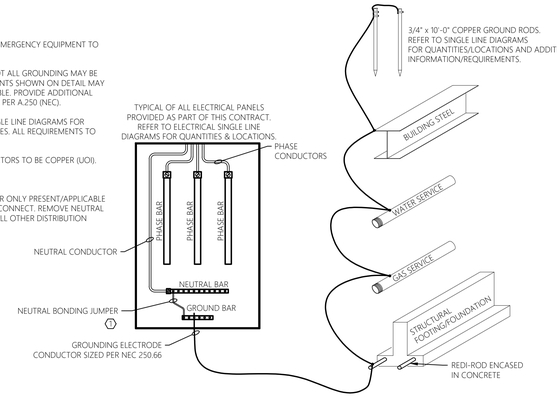

3 E-030 TYPICAL PANEL GROUNDING DETAIL
SCALE: NTS

GENERAL NOTES:

1. COORDINATE DUCT BANK REQUIREMENTS (IF ANY) FOR NEW SERVICE WITH THE UTILITY.
2. POWER AND COMMUNICATION CONDUITS TO HAVE SEPARATION OF 12" MINIMUM
3. DETAIL IS TYPICAL AND MAY REFLECT CONDUITS NOT REQUIRED FOR PROJECT.
4. FINISHED SURFACE TO MATCH SURFACE BEING DISTURBED.
   - IN AREA OF GRASS: USE 4" TOP SOIL & SEEDING, AND COVER WITH MULCH.
   - IN ROADWAY OR NON-GRASS: USE COMPACTED 95% PROCTOR GRANULAR FILL.
5. CONTRACTOR TO UTILIZE CONDUIT SPACERS FOR ALL DUCT BANKS, NOT SHOWN ON DETAIL FOR CLARITY.

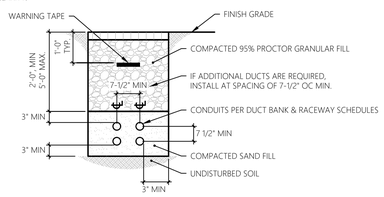

4 E-030 TYPICAL SAND FILL DUCT BANK SECTION DETAIL
SCALE: NTS

GENERAL NOTES:

1. REFER TO ELECTRICAL PLANS FOR GENERAL QUANTITIES/LOCATIONS. COORDINATE FINAL QUANTITIES/LOCATIONS WITH OWNER, ENGINEER, AND EQUIPMENT MANUFACTURER.
2. BOND ALL NORMAL AND EMERGENCY EQUIPMENT TO GROUND SYSTEM.
3. DETAIL IS TYPICAL AND NOT ALL GROUNDING MAY BE SHOWN. SOME COMPONENTS SHOWN ON DETAIL MAY NOT BE PRESENT/APPLICABLE. PROVIDE ADDITIONAL GROUNDING AS REQUIRED PER A.250 (NEC).
4. ALL GROUND CONDUCTORS SHALL BE IN ACCORDANCE WITH THE NEC.
5. INSTALL AIR TERMINAL/DOWN CONDUCTOR PER MANUFACTURERS RECOMMENDATIONS.
6. REFER TO SPECIFICATIONS FOR ADDITIONAL INFORMATION/REQUIREMENTS.

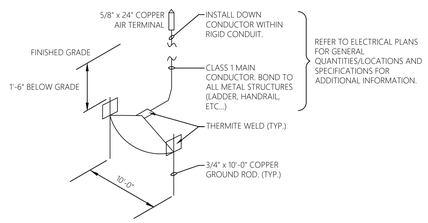

5 E-030 TYPICAL LIGHTNING PROTECTION GROUNDING DETAIL
SCALE: NTS

GENERAL NOTES:

1. CONDUIT MOVEMENT PROVISIONS - WHERE CONDUITS ARE SUBJECT TO MOVEMENT, PROVIDE EXPANSION AND EXPANSION/DEFLECTIONS FITTINGS TO PREVENT DAMAGE TO ENCLOSED CONDUCTORS OR CONNECTED EQUIPMENT. THIS INCLUDES, BUT IS NOT LIMITED TO:
   1.1. WHERE CONDUITS CROSS STRUCTURAL JOINTS INTENDED FOR EXPANSION, CONTRACTION, OR DEFLECTION.
   1.2. WHERE CONDUITS ARE SUBJECT TO EARTH MOVEMENT BY SETTLEMENT OR FROST.
3. CONDENSATION PREVENTION - WHERE CONDUITS CROSS BARRIERS BETWEEN AREAS OF POTENTIAL SUBSTANTIAL TEMPERATURE DIFFERENTIAL, PROVIDE SEALING FITTING OR APPROVED SEALING COMPOUND AT AN ACCESSIBLE POINT NEAR THE PENETRATION TO PREVENT CONDENSATION. THIS INCLUDES, BUT IS NOT LIMITED TO:
   3.1. WHERE CONDUITS PASS FROM OUTDOORS INTO CONDITIONED INTERIOR SPACES.
   3.2. WHERE CONDUITS PASS FROM UNCONDITIONED INTERIOR SPACES INTO CONDITIONED INTERIOR SPACES.

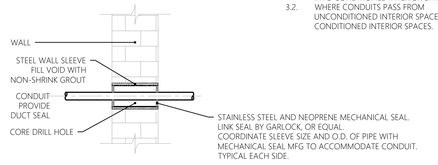

6 E-030 TYPICAL BLOCK/BRICK/CAST-IN PLACE CONDUIT PENETRATION DETAIL
SCALE: NTS

CARD ACCESS CONTROL PROJECT REQUIREMENTS:

1. GENERIC ROUGH-IN REQUIREMENTS ARE ILLUSTRATED IN THE ADJACENT DETAIL. CONTRACTOR SHALL COORDINATE WITH OWNER TO PROVIDE ACTUAL ROUGH-IN REQUIRED FOR EACH SPECIFIC DOOR INSTALLATION. THIS DETAIL IS NOT INTENDED TO SHOW ALL CONDITIONS/INSTALLATION REQUIREMENTS.
2. ACCESS CONTROL SYSTEM AND ASSOCIATED EQUIPMENT, CABLING, COMPONENTS, AND DEVICES ARE PROVIDED BY THE OWNER. THIS CONTRACT TO PROVIDE ALL REQUIRED RACEWAY AND BOXES FOR AN OVERALL COMPLETE AND OPERABLE SYSTEM. COORDINATE FINAL REQUIREMENTS CLOSELY WITH THE OWNER.

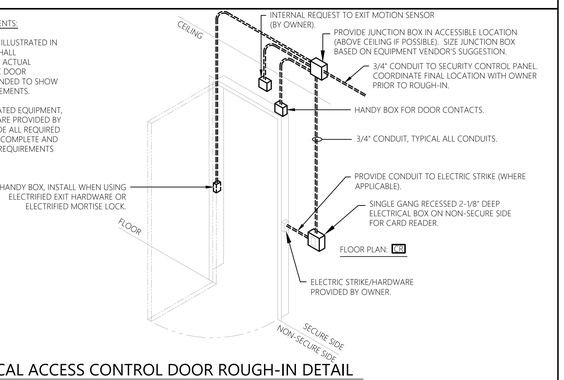

7 E-030 TYPICAL ACCESS CONTROL DOOR ROUGH-IN DETAIL
SCALE: NTS

GENERAL NOTES

EQUIPMENT/ENCLOSURES LARGER THAN 4" x 4" SHALL BE INSTALLED ON A 1/4" THICK STAINLESS STEEL MOUNTING PLATE. TWO POSTS ARE REQUIRED FOR EQUIPMENT/ENCLOSURES WIDER THAN 8". MOUNTING PLATE SHALL BE 2" GREATER ON EACH SIDE THAN DIMENSION OF EQUIPMENT/ENCLOSURE TO BE MOUNTED. ROUND AND GRIND ALL CORNERS AND EDGES OF PLATE. FASTEN EQUIPMENT/ENCLOSURE TO PLATE AND FASTEN PLATE TO SUPPORT ANGLES WITH 3/8" STAINLESS STEEL FASTENERS. QUANTITY AS REQUIRED. PROVIDE #6 GROUND TO GROUND GRID.

GENERAL NOTES:

1. BACK PAINT METALS IN CONTACT WITH CONCRETE WITH 5 MILS OF TNEMEC SETIES 66-GRAY, HIGH BUILD EPOXOLINE, DUPONT 25P EPOXY, OR EQUAL.
2. ALL MOUNTING HARDWARE TO BE STAINLESS STEEL.
3. COORDINATE REQUIREMENTS CLOSELY WITH OWNER, ENGINEER, AND APPLICABLE TRADE CONTRACTOR.

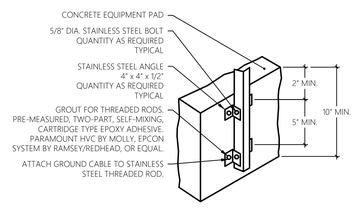

SIDE MOUNTED ON CONCRETE EQUIPMENT PAD

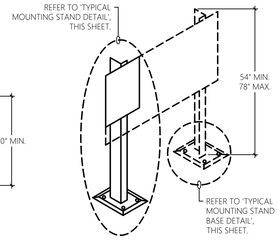

FREE STANDING

8 E-030 TYPICAL MOUNTING STAND INSTALLATION DETAIL
SCALE: NTS

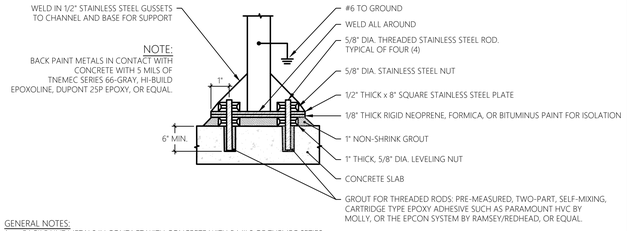

NOTE:
BACK PAINT METALS IN CONTACT WITH CONCRETE WITH 5 MILS OF TNEMEC SERIES 66-GRAY, HI-BUILD EPOXOLINE, DUPONT 25P EPOXY, OR EQUAL.

GENERAL NOTES:

1. BACK PAINT METALS IN CONTACT WITH CONCRETE WITH 5 MILS OF TNEMEC SETIES 66-GRAY, HIGH BUILD EPOXOLINE, DUPONT 25P EPOXY, OR EQUAL.
2. ALL MOUNTING HARDWARE TO BE STAINLESS STEEL.
3. COORDINATE REQUIREMENTS CLOSELY WITH OWNER, ENGINEER, AND APPLICABLE TRADE CONTRACTOR.

9 E-030 TYPICAL MOUNTING STAND BASE DETAIL
SCALE: NTS

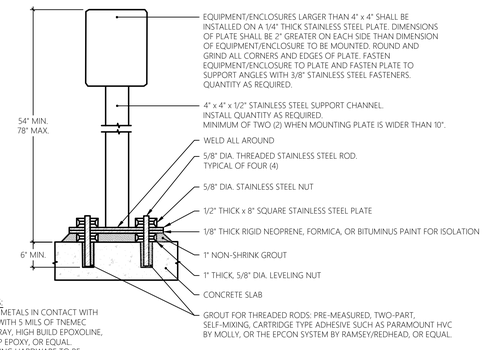

GENERAL NOTES:

1. BACK PAINT METALS IN CONTACT WITH CONCRETE WITH 5 MILS OF TNEMEC SETIES 66-GRAY, HIGH BUILD EPOXOLINE, DUPONT 25P EPOXY, OR EQUAL.
2. ALL MOUNTING HARDWARE TO BE STAINLESS STEEL.
3. COORDINATE REQUIREMENTS CLOSELY WITH OWNER, ENGINEER, AND APPLICABLE TRADE CONTRACTOR.

10 E-030 TYPICAL MOUNTING STAND DETAIL
SCALE: NTS

MHE ENGINEERING
33 Airport Center Drive, Suite 202
New Windsor, NY 12553
(845) 567-3100
111 Wheatfield Drive, Suite 1
Milford, PA 18337
(570) 296-2765

BID ADDENDUM

JADE STONE ENGINEERING

STATE OF NEW YORK · JEFFREY E. ROBINSON · 095896 · LICENSED PROFESSIONAL ENGINEER

HAZARDOUS MATERIAL NOTE:
THE SERVICES PROVIDED BY MHE, INCLUDING ALL WORK DEPICTED ON MHE PLANS, DO NOT INCLUDE SERVICES RELATED TO THE IDENTIFICATION, CONTROLS OR HANDLING OF HAZARDOUS MATERIALS, INCLUDING SUCH MATERIALS AS ASBESTOS AND LEAD PAINT. ALL TESTING, IDENTIFICATION, ABATEMENT, CONTROLS, AND HANDLING OF HAZARDOUS MATERIALS SHALL BE UNDERTAKEN BY A HAZARDOUS MATERIAL CONSULTANT AND CERTIFIED PROFESSIONALS. IF SUCH MATERIALS HAVE BEEN IDENTIFIED, CONTRACTOR WILL COMMUNICATE DIRECTLY WITH HAZARDOUS MATERIAL PROFESSIONAL FOR THE PERFORMANCE OF ANY WORK ON OR ADJACENT TO SAID MATERIALS. IF UNIDENTIFIED MATERIALS OF CONCERN ARE ENCOUNTERED WHILE UNDERTAKING THE WORK SHOWN HEREON, CONTRACTOR SHALL IMMEDIATELY NOTIFY ENGINEER AND OWNER, AND SHALL OBTAIN DIRECTION FROM THE HAZARDOUS MATERIAL CONSULTANT PRIOR TO THE CONTINUATION OF WORK INVOLVING SUSPECTED MATERIAL.

UDIG·NY SAFE DIGGING STARTS HERE
CALL 811

UNAUTHORIZED ADDITION OR ALTERATION OF THIS PLAN IS A VIOLATION OF SECTION 7209(2) OF THE NEW YORK STATE EDUCATION LAW.

ALL PRODUCTION & INTELLECTUAL PROPERTY RIGHT RESERVED ©

CAESARS LANE WWTP EXPANSION PROJECT: PHASE 2
145 CAESARS LN.
NEW WINDSOR, NY 12553
FOR TOWN OF NEW WINDSOR
555 UNION AVE.
NEW WINDSOR, NY 12553

ELECTRICAL DETAILS

REVISIONS

NO.	DESCRIPTION	DATE

ISSUED DATE:	06 JUNE, 2025
DESIGN BY:	RRM
DRAWN BY:	CDJ
CHECKED BY:	MGR
REVIEWED BY:	JER

SHEET NO.
E-030

PROJECT # 18-732 PHASE #

GENERAL NOTES:

1. BOND ALL NORMAL AND EMERGENCY EQUIPMENT TO GENERATOR GROUND RING SYSTEM AS WELL AS BUILDING MAIN GROUNDING SYSTEM.
2. NOT ALL GROUNDING IS SHOWN. PROVIDE ADDITIONAL GROUNDING AS REQUIRED PER NEC.
3. REFER TO ELECTRICAL PLANS & SINGLE LINE DIAGRAMS FOR GROUND CONDUCTOR SIZES.
4. DETAIL IS TYPICAL AND MAY REFLECT GROUNDING TO OBJECTS NOT PRESENT ON SITE OR EXISTING GROUNDING CONDITIONS. CONTRACTOR TO FIELD VERIFY.
5. GROUNDING ELECTRODE CONDUCTOR TO BE SIZED PER NEC 250.66
6. REFER TO ELECTRICAL SINGLE LINE DIAGRAMS FOR ADDITIONAL INFORMATION.

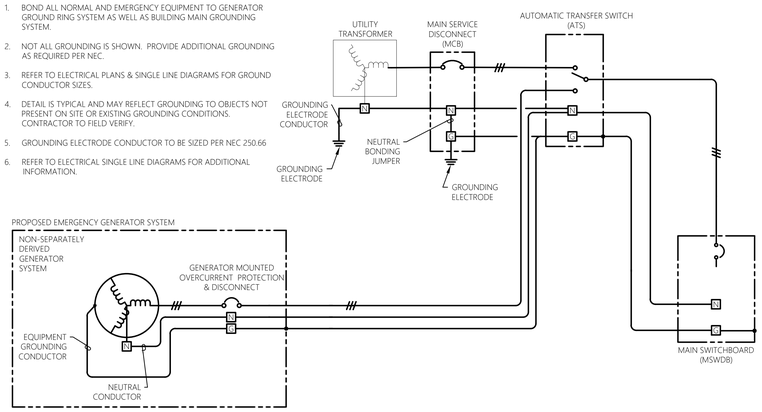

1 E-031 TYPICAL NON-SEPERATELY DERIVED GENERATOR SYSTEM DETAIL
SCALE: NTS

GENERAL NOTES:

1. CONSTRUCTION SHALL BE A POLYMER CONCRETE.
2. HAND HOLE TO HAVE A MINIMUM TIER 15 RATING.
3. ALL HARDWARE SHALL BE STAINLESS STEEL. PROVIDE SLEEVES AND SEALS FOR ALL PENETRATIONS.
4. BOTTOM SHALL BE OPEN FOR DRAINAGE.
5. PROVIDE LOGO ON COVER 'ELECTRIC', OR 'COMMUNICATIONS'. COVER TO BE SECURED WITH STAINLESS STEEL PENTA BOLTS AND BE GASKETED.
6. HAND HOLES MUST MEET ALL APPLICABLE REQUIREMENTS OF ANSI/SCTE 77-2013 AND BE UL LISTED.
7. PROVIDE HAND HOLE AS 48" x 48" x 48". HAND HOLES SHALL MEET MINIMUM SIZE REQUIREMENTS IN ACCORDANCE WITH NEC ARTICLE 314.30. CONTRACTOR TO FIELD VERIFY.
8. PROVIDE AS SPLIT HANDHOLE SEPARATING VOLTAGE, OR SIGNAL TYPE.
9. HAND HOLE TO BE AS MANUFACTURED BY QUIAZITE (HUBBELL POWER SYSTEMS), OLDCASTLE, OR APPROVED EQUAL.
10. PROVIDE HEAVY DUTY FIBERGLASS CABLE RACKS AND SUPPORTS ON EACH INTERIOR WALL OF HANDHOLE.

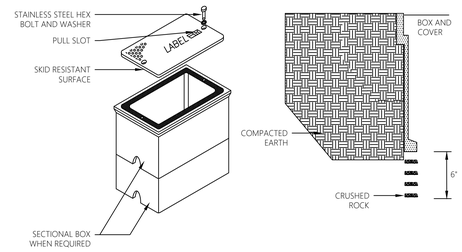

2 E-031 TYPICAL HANDHOLE DETAIL
SCALE: NTS

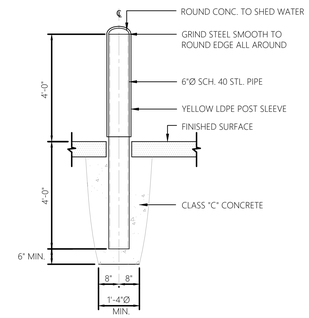

3 E-031 TYPICAL BOLLARD DETAIL
SCALE: NTS

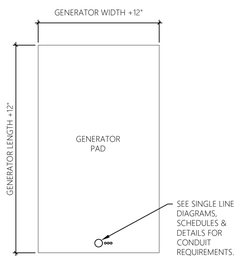

PLAN

GENERAL NOTES:

1. CONCRETE 4,000 PSI @ 28 DAYS.
2. WELDED WIRE FABRIC ASTM A-185. (FLAT SHEETS)
3. DEFORMED BARS ASTM A-615, GRADE 60.
4. TOP SURFACE SHALL BE TROWEL FINISHED.
5. 3/4" CHAMFER ALONG ALL EXPOSED EDGES, INCLUDING OPENING.
6. REINFORCING SHALL BE AS FOLLOWS:
   - #4 BARS @ 12" EACH WAY
7. GENERATOR PAD SHALL BE CAST IN PLACE.
8. COORDINATE CONDUIT STUB-UPS & PENETRATIONS AT PAD WITH INSTALLED EQUIPMENT, AND FIELD CONDITIONS. CONTRACTOR TO FIELD VERIFY.

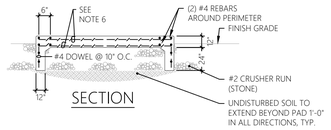

SECTION

4 E-031 TYPICAL GENERATOR PAD DETAIL
SCALE: NTS

GENERAL NOTES:

1. BACK PAINT METALS IN CONTACT WITH CONCRETE WITH 5 MILS OF TNEMEC SERIES 66-GRAY, HIGH BUILD EPOXOLINE, DUPONT 25P EPOXY, OR EQUAL.
2. ALL MOUNTING HARDWARE TO BE STAINLESS STEEL.
3. COORDINATE FINAL REQUIREMENTS CLOSELY WITH OWNER, ENGINEER, AND APPLICABLE TRADE CONTRACTOR.

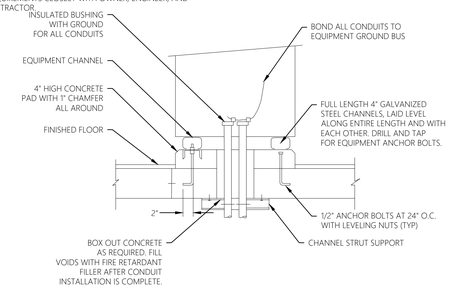

5 E-031 TYPICAL MOTOR CONTROL CENTER EQUIPMENT PAD DETAIL
SCALE: NTS

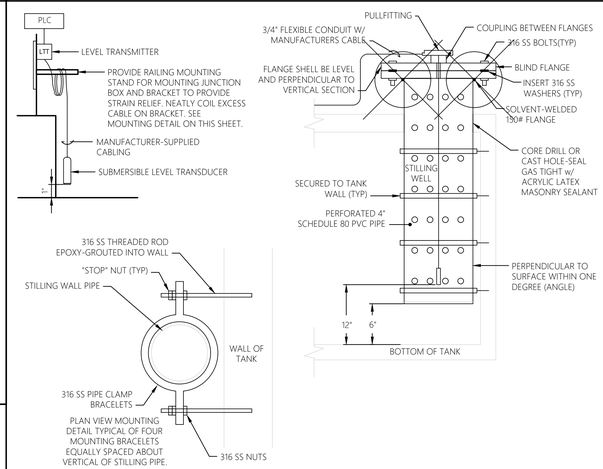

6 E-031 SUBMERSIBLE LEVEL TRANSDUCER WIRING DETAIL
SCALE: NTS

KEY NOTES:

1. PROVIDE CONDUCTORS/CABLE IN CONDUIT PER MANUFACTURER'S REQUIREMENTS. CONNECTION AT GENERATOR SHALL BE FLEXIBLE TYPE. TYPICAL OF ALL GENERATOR AUXILIARY EQUIPMENT.
2. PROVIDE 30MM MUSHROOM HEAD EMERGENCY STOP IN NEMA 1 ENCLOSURE. PROVIDE LABEL. LOCATE PER ELECTRICAL PLANS. COORDINATE FINAL LOCATION WITH OWNER.
3. COORDINATE FINAL CIRCUITRY (CONDUIT & CONDUCTOR) REQUIREMENTS WITH EQUIPMENT MANUFACTURER AND PROVIDE AS REQUIRED. CONTRACTOR TO FIELD VERIFY.
4. (4)#14, 3/4"C & RS-485 CABLE, 1"C.
5. (12)#14 & (2)#18STP, 1"C. (ALSO SHOWN ON SINGLE LINE DIAGRAM)
6. (4)#14, 3/4"C

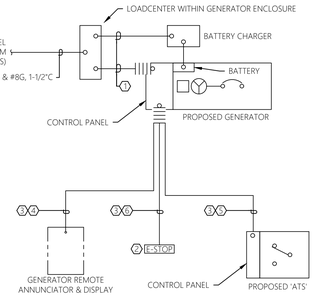

TYPICAL GENERATOR CONTROL AND AUXILIARY EQUIPMENT RISER DIAGRAM
7 E-031 SCALE: NTS

GENERAL NOTES:

1. BACKBOARD TO BE FABRICATED/CONSTRUCTED OF STEEL MATERIALS.
2. ALL DISCONNECTS, PANELBOARDS, AND ELECTRICAL EQUIPMENT SHALL BE LOCATED FIVE (5) FEET ABOVE GRADE (ON CENTER) AND COMPLY WITH NEC REQUIREMENTS, UNLESS OTHERWISE INDICATED.
3. CONDUIT AND ELECTRICAL EQUIPMENT TO BE SUPPORTED/BRACED (UNISTRUT CROSS MEMBER) AT MINIMUM EVERY 12".
4. NOT ALL ELECTRICAL EQUIPMENT MOUNTED TO BACKBOARD MAY BE SHOWN. DETAIL IS DIAGRAMMATIC IN NATURE. SIZE AND ARRANGE PANELS AND ELECTRICAL EQUIPMENT TO FIT BACKBOARD. UTILIZE BOTH SIDES OF ELECTRICAL BACKBOARD AS REQUIRED.
5. ALL REQUIREMENTS TO BE PER NEC.
6. QUANTITY OF CONDUITS/CIRCUITS SHOWN IN DETAIL IS DIAGRAMMATIC IN NATURE. REFER TO ELECTRICAL SITE PLAN, SCHEDULES, AND SINGLE LINE DIAGRAMS FOR SPECIFIC QUANTITIES.
7. COORDINATE ALL ELECTRICAL EQUIPMENT MOUNTED TO ELECTRICAL BACKBOARD AND FINAL LOCATION WITH THE OWNER/ENGINEER.
8. CONTRACTOR TO PROVIDE NAMEPLATE FOR ALL EQUIPMENT MOUNTED TO BACKBOARD.
9. ALL EQUIPMENT TO BE RATED NEMA 4X AND PAD LOCKABLE.

CONTRACTOR TO SIZE AND ARRANGE ELECTRICAL EQUIPMENT TO FIT BACKBOARD.

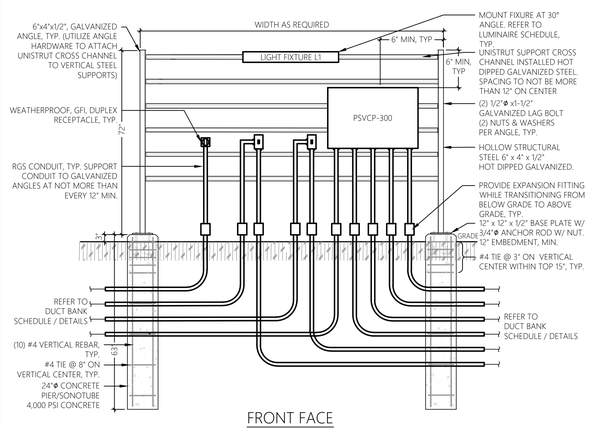

FRONT FACE

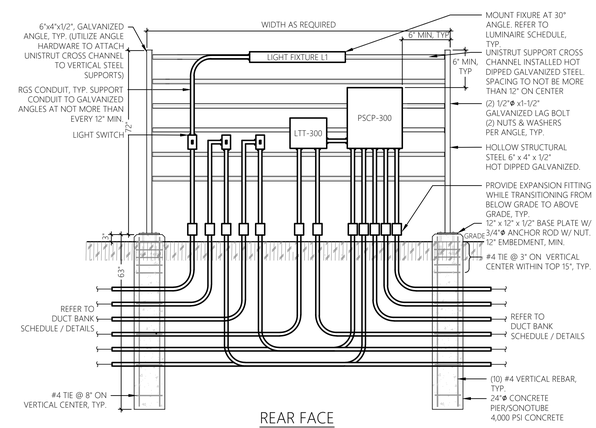

REAR FACE

SLUDGE CONTROL ELECTRICAL BACKBOARD DETAIL
10 E-031 SCALE: NTS

GENERAL NOTES:

1. CONCRETE 4,000 PSI @ 28 DAYS.
2. PROVIDE AS 4" MIN. PAD UNLESS OTHERWISE NOTED.
3. DEFORMED BARS ASTM A-615, GRADE 60.
4. TOP SURFACE SHALL BE TROWEL FINISHED.
5. 3/4" CHAMFER ALONG ALL EXPOSED EDGES, INCLUDING OPENING.
6. REINFORCING SHALL BE AS FOLLOWS:
   - #4 BARS @ 12" EACH WAY
7. COORDINATE CONDUIT PENETRATIONS AT PAD WITH INSTALLED EQUIPMENT, AND FIELD CONDITIONS. CONTRACTOR TO FIELD VERIFY.

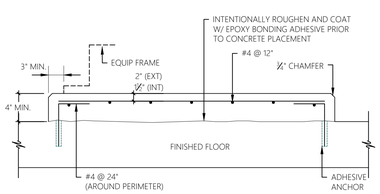

TYPICAL INTERIOR EQUIPMENT PAD DETAIL
8 E-031 SCALE: NTS

GENERAL NOTES:

1. WHEN BORING THROUGH BUILDING, USE SMALLEST DIAMETER POSSIBLE TO ACCOMMODATE CONDUIT.
2. SEAL PENETRATIONS WITH POLYURETHANE CAULK. PATCH & MATCH DISTURBED SURFACES.

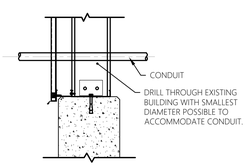

TYPICAL METAL BUILDING CONDUIT PENETRATION DETAIL
9 E-031 SCALE: NTS

MHE ENGINEERING
33 Airport Center Drive, Suite 202
New Windsor, NY 12553
(845) 567-3100
111 Wheatfield Drive, Suite 1
Milford, PA 18337
(570) 296-2765

BID ADDENDUM

JADE STONE ENGINEERING

STATE OF NEW YORK · JEFFREY E. ROBINSON · 095896 · LICENSED PROFESSIONAL ENGINEER

HAZARDOUS MATERIAL NOTE:
THE SERVICES PROVIDED BY MHE, INCLUDING ALL WORK DEPICTED ON MHE PLANS, DO NOT INCLUDE SERVICES RELATED TO THE IDENTIFICATION, CONTROLS OR HANDLING OF HAZARDOUS MATERIALS, INCLUDING SUCH MATERIALS AS ASBESTOS AND LEAD PAINT. ALL TESTING, IDENTIFICATION, ABATEMENT, CONTROLS, AND HANDLING OF HAZARDOUS MATERIALS SHALL BE UNDERTAKEN BY A HAZARDOUS MATERIAL CONSULTANT AND CERTIFIED PROFESSIONALS. IF SUCH MATERIALS HAVE BEEN IDENTIFIED, CONTRACTOR WILL COMMUNICATE DIRECTLY WITH HAZARDOUS MATERIAL PROFESSIONAL FOR THE PERFORMANCE OF ANY WORK ON OR ADJACENT TO SAID MATERIALS. IF UNIDENTIFIED MATERIALS OF CONCERN ARE ENCOUNTERED WHILE UNDERTAKING THE WORK SHOWN HEREON, CONTRACTOR SHALL IMMEDIATELY NOTIFY ENGINEER AND OWNER, AND SHALL OBTAIN DIRECTION FROM THE HAZARDOUS MATERIAL CONSULTANT PRIOR TO THE CONTINUATION OF WORK INVOLVING SUSPECTED MATERIAL.

UDIG·NY SAFE DIGGING STARTS HERE
CALL 811

UNAUTHORIZED ADDITION OR ALTERATION OF THIS PLAN IS A VIOLATION OF SECTION 7209(2) OF THE NEW YORK STATE EDUCATION LAW.

ALL PRODUCTION & INTELLECTUAL PROPERTY RIGHT RESERVED ©

CAESARS LANE WWTP EXPANSION PROJECT: PHASE 2
145 CAESARS LN.
NEW WINDSOR, NY 12553
FOR TOWN OF NEW WINDSOR
555 UNION AVE.
NEW WINDSOR, NY 12553

ELECTRICAL DETAILS

REVISIONS

NO.	DESCRIPTION	DATE

ISSUED DATE:	06 JUNE, 2025
DESIGN BY:	RRM
DRAWN BY:	CDJ
CHECKED BY:	MGR
REVIEWED BY:	JER

SHEET NO.
E-031

PROJECT # 18-732 PHASE #

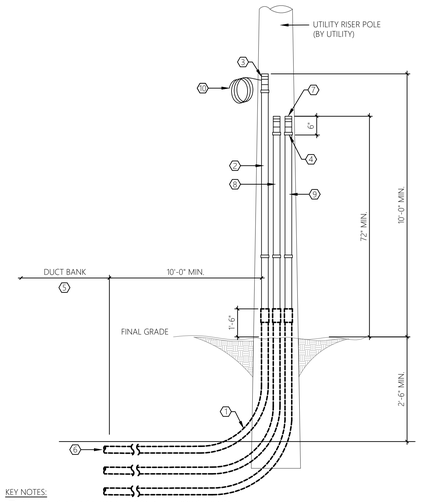

KEY NOTES:

1. 42" RADIUS RIGID GALVANIZED CONDUIT ELBOWS. (TYPICAL)
2. ONE (1) 4" DIAMETER RGS CONDUIT (OR AS REQUIRED BY UTILITY) WITH PIPE STRAPS. REFER TO SINGLE LINE DIAGRAM FOR ADDITIONAL INFORMATION/REQUIREMENTS.
3. UTILITY APPROVED GROUNDING, INSULATED BUSHING BONDED TO COPPER GROUND CONDUCTOR. GROUND CONDUCTOR TO BE SIZED PER NEC ARTICLE 250. PROVIDE 20'-0" OF COILED SLACK.
4. UTILITY APPROVED GROUND CLAMP BONDED TO COPPER GROUND CONDUCTOR. (TYPICAL)
5. REFER TO ELECTRICAL SITE PLAN, SCHEDULES, AND SINGLE LINE DIAGRAMS FOR LOCATIONS AND ADDITIONAL INFORMATION/REQUIREMENTS.
6. PROVIDE SPACING UNDERGROUND PER DUCT BANK SECTION DETAILS. (TYPICAL)
7. PROVIDE SUFFICIENT DRIP LOOP & DUCT SEAL ON CONDUIT SYSTEMS (ALL CONDUITS) TO PREVENT WATER ENTRANCE INTO CONDUIT SYSTEM. (TYPICAL)
8. ONE (1) 4" DIAMETER RGS SPARE CONDUIT WITH PIPE STRAP. EXTEND MIN 72" AFG. CAP AND INSTALL PULL WIRE. REFER TO SINGLE LINE DIAGRAM FOR ADDITIONAL INFORMATION.
9. ONE (1) 4" DIAMETER RGS SPARE CONDUIT (INTENDED FOR COMMUNICATION SERVICE) WITH PIPE STRAP. EXTEND MIN 72" AFG. CAP AND INSTALL PULL WIRE. REFER TO SINGLE LINE DIAGRAM AND DETAILS FOR ADDITIONAL INFORMATION.
10. PROVIDE AS 15KV CABLE SYSTEM. PROVIDE AS (3)#4/0 ALUMINUM, UL TYPE MV-105, 133% INSULATION LEVEL, 220 MILS, EPR, AND COPPER TAPE SHIELD. PROVIDE AS GENERAL CABLE SPEC 6360 OR APPROVED EQUAL. CONTRACTOR TO PROVIDE 45'-0" OF COILED PRIMARY CONDUCTOR SLACK AT THE UTILITY RISER POLE AND 20'-0" OF COILED PRIMARY CONDUCTOR SLACK AT THE UTILITY PAD-MOUNTED TRANSFORMER. ALL PRIMARY CONNECTIONS AT THE UTILITY RISER POLE AND PAD-MOUNTED TRANSFORMER ARE BY THE UTILITY. REFER TO SPECIFICATIONS FOR ADDITIONAL INFORMATION/REQUIREMENTS.

1 E-032 TYPICAL UTILITY RISER POLE DETAIL
SCALE: NTS

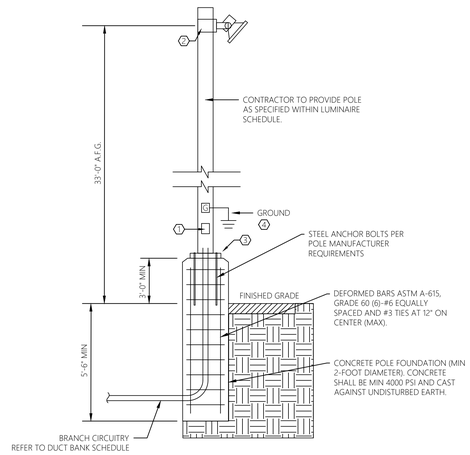

GENERAL NOTES:

1. DETAIL IS TYPICAL FOR ALL PROPOSED AREA/SITE POLE MOUNTED LUMINAIRES.
2. AREA/SITE LUMINAIRE FIXTURES TO BE DARK SKY COMPLIANT AND UL LISTED FOR WET LOCATION.
3. MOUNT AREA/SITE LIGHT FIXTURES AT HEIGHT SPECIFIED TO ALUMINUM POLE.
4. REFER TO ELECTRICAL PLANS FOR QUANTITIES & PROPOSED LOCATIONS.
5. CONTRACTOR TO ADJUST FINAL AIMING ANGLE OF LIGHT FIXTURES TO LIGHT DESIRED AREAS AND MINIMIZE LIGHT POLLUTION. COORDINATE WITH OWNER.
6. REFER TO LUMINAIRE SCHEDULE FOR SPECIFICATIONS REGARDING LIGHT POLE AND LIGHT FIXTURE.
7. PRECAST FOUNDATIONS MAY BE USED IF APPROVED BY THE ENGINEER.

KEY NOTES:

1. HAND HOLE PROVIDED IN POLE. ALL SPLICES SHALL BE IN HAND HOLE. UTILIZE WATERTIGHT SPLICING METHODS. COORDINATE WITH POLE MANUFACTURER TO PROVIDE HAND HOLE (PULL POINT) WITHIN BASE OF POLE AS SHOWN.
2. PROVIDE ARM, TENON ADAPTOR, AND/OR SLIP FITTER WITH SOLID STATE AREA LIGHTING FIXTURE FOR AN OVERALL COMPLETE INSTALLATION. CONTRACTOR TO COORDINATE WITH EQUIPMENT MANUFACTURER AND PROVIDE ALL REQUIRED STAINLESS STEEL MOUNTING HARDWARE, BRACKETS, ACCESSORIES, ETC... FOR AN OVERALL COMPLETE AND OPERABLE POLE MOUNTED LIGHT FIXTURE.
3. CONTRACTOR TO COORDINATE BOLT HOLE PATTERN IN FIELD PRIOR TO RELEASING ORDER. PROVIDE BASE PLATE AS REQUIRED FOR ANCHORING POLE TO CONCRETE. CONTRACTOR TO FIELD VERIFY AND PROVIDE AS REQUIRED.
4. CONTRACTOR TO GROUND EACH POLE MOUNTED LIGHT FIXTURE. PROVIDE 3/4"Φ x 10' COPPER GROUND ROD AND BOND TO POLE. ALL GROUNDING CONDUCTORS TO BE #2 AWG COPPER (MINIMUM).

2 E-032 TYPICAL POLE MOUNTED LIGHT FIXTURE INSTALLATION DETAIL
SCALE: NTS

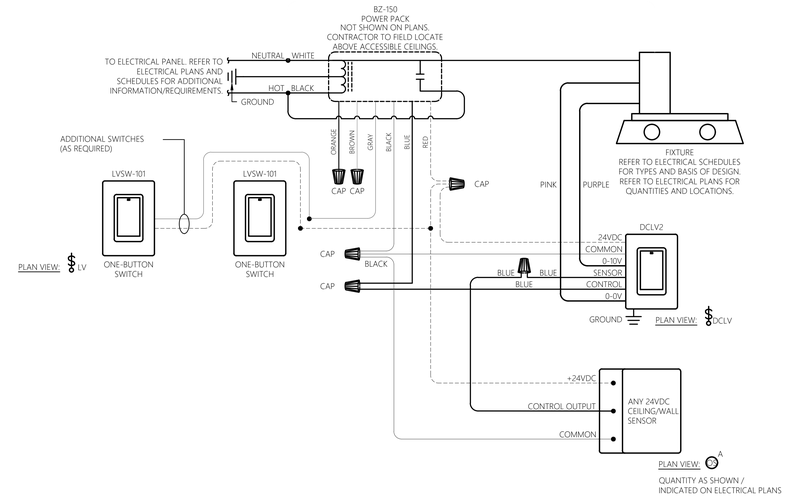

SEQUENCE OF OPERATION:

1. OCCUPANCY SENSOR SHALL BE SET TO 20 MINUTE TIME DELAY. SENSOR SHALL BE SET FOR AUTOMATIC ON OPERATION.
2. LOW VOLTAGE SWITCH SHALL TOGGLE ON/OFF LIGHTING FIXTURES.
3. REFER TO ELECTRICAL PLANS FOR EXACT QUANTITIES REQUIRED PER ROOM.

3 E-032 TYPICAL ANALOG OCCUPANCY SENSOR WITH POWER PACK & LOW VOLTAGE MOMENTARY SWITCH
SCALE: NTS

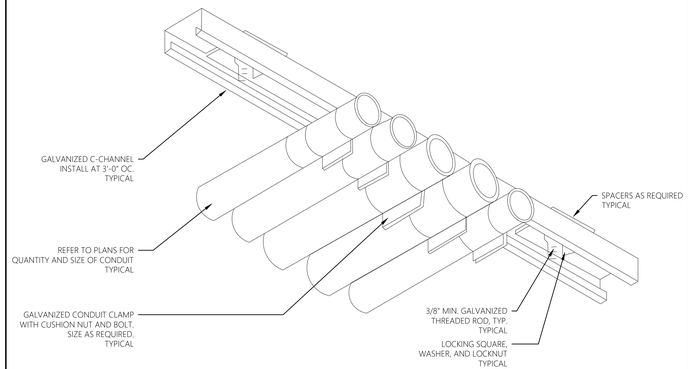

4 E-032 TYPICAL CONDUIT SUPPORT DETAIL
SCALE: NTS

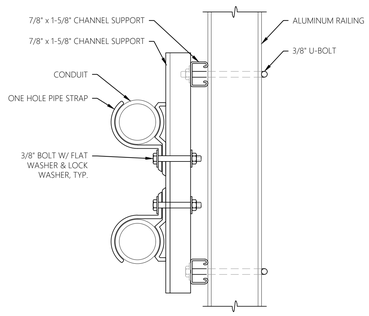

5 E-032 TYPICAL ALUMINUM RAILING CONDUIT CLAMP DETAIL
SCALE: NTS

KEY NOTES:

1. CONTRACTOR TO PROVIDE THREE (3) 120V, 20A PHOTO CONTROL WITH ADJUSTABLE SHIELD FOR CONTROL OF EXTERIOR LIGHTING CIRCUITS. INTERLOCK WITH ASTRONOMICAL TIME SWITCHES. CONFIRM FINAL LOCATION WITH THE OWNER PRIOR TO ROUGH-IN. INSTALL PER MANUFACTURER'S RECOMMENDATIONS.
2. CONTRACTOR TO PROVIDE THREE (3) WATTSTOPPER RT-200 ASTRONOMICAL TIME SWITCH OR APPROVED EQUAL WITHIN NEMA 1 ENCLOSURES. ONE SWITCH TO CONTROL PROPOSED EXTERIOR WALL MOUNTED LIGHT FIXTURES TYPES 'WP1' & 'WP1E'. THE SECOND TO CONTROL THE SBR SITE LIGHTING FIXTURES 'STPE 'S1', AND THE THIRD TO CONTROL GENERATOR SITE LIGHTING FIXTURE TYPE 'S1'. PROGRAM TIME SWITCHES FOR LIGHTING 'ON' AT ASTRONOMICAL SUNSET AND 'OFF' AT ASTRONOMICAL SUNRISE. FINAL ON/OFF PROGRAMMING PARAMETERS TO BE COORDINATED WITH THE OWNER.

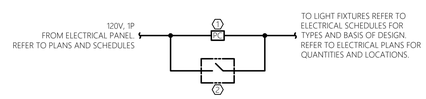

6 E-032 PHOTOCELL WIRING DIAGRAM
SCALE: NTS

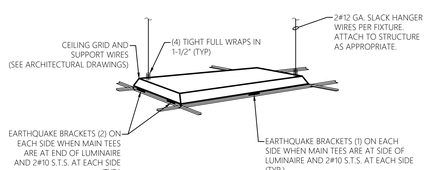

7 E-032 TYPICAL LAY-IN FIXTURE MOUNTING DETAIL
SCALE: NTS

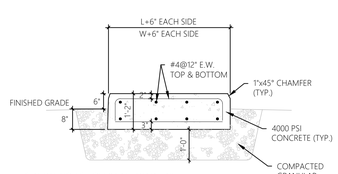

GENERAL NOTES, EQUIPMENT PAD DETAIL:

1. L = LENGTH OF EQUIPMENT
2. W = WIDTH OF EQUIPMENT
3. ANCHOR EQUIPMENT TO PAD PER MANUFACTURERS REQUIREMENTS

8 E-032 TYPICAL EXTERIOR EQUIPMENT PAD DETAIL
SCALE: NTS

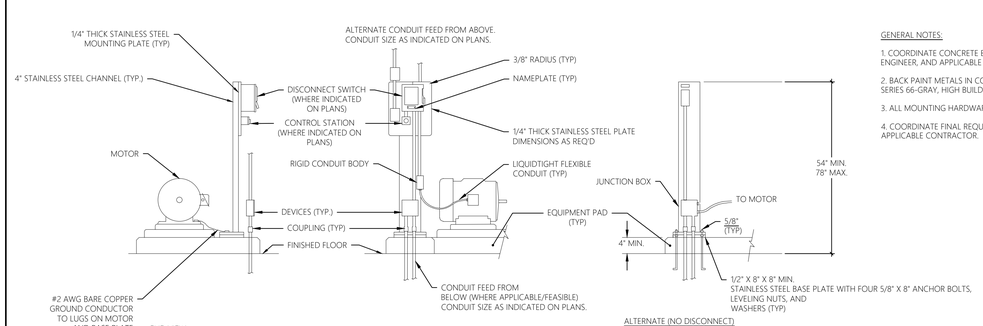

GENERAL NOTES:

1. COORDINATE CONCRETE EQUIPMENT PAD CLOSELY WITH OWNER, ENGINEER, AND APPLICABLE CONTRACTOR.
2. BACK PAINT METALS IN CONTACT WITH CONCRETE WITH 5 MILS OF TNEMEC SERIES 66-GRAY, HIGH BUILD EPOXOLINE, DUPONT 25P EPOXY, OR EQUAL.
3. ALL MOUNTING HARDWARE TO BE STAINLESS STEEL.
4. COORDINATE FINAL REQUIREMENTS CLOSELY WITH OWNER, ENGINEER, AND APPLICABLE CONTRACTOR.

9 E-032 TYPICAL MOTOR INSTALLATION DETAIL
SCALE: NTS

MHE ENGINEERING
33 Airport Center Drive, Suite 202
New Windsor, NY 12553
(845) 587-3100
111 Wheatfield Drive, Suite 1
Milford, PA 18337
(570) 296-2765

BID ADDENDUM

JADE STONE ENGINEERING

STATE OF NEW YORK
JEFFREY E. ROBINSON
095896
LICENSED PROFESSIONAL ENGINEER

HAZARDOUS MATERIAL NOTE:
THE SERVICES PROVIDED BY MHE, INCLUDING ALL WORK DEPICTED ON MHE PLANS, DO NOT INCLUDE SERVICES RELATED TO THE IDENTIFICATION, CONTROLS OR HANDLING OF HAZARDOUS MATERIALS, INCLUDING SUCH MATERIALS AS ASBESTOS AND LEAD PAINT. ALL TESTING, IDENTIFICATION, ABATEMENT, CONTROLS, AND HANDLING OF HAZARDOUS MATERIALS SHALL BE UNDERTAKEN BY A HAZARDOUS MATERIAL CONSULTANT AND CERTIFIED PROFESSIONALS. IF SUCH MATERIALS HAVE BEEN IDENTIFIED, CONTRACTOR WILL COMMUNICATE DIRECTLY WITH HAZARDOUS MATERIAL PROFESSIONAL FOR THE PERFORMANCE OF ANY WORK ON OR ADJACENT TO SAID MATERIALS. IF UNIDENTIFIED MATERIALS OF CONCERN ARE ENCOUNTERED WHILE UNDERTAKING THE WORK SHOWN HEREON, CONTRACTOR SHALL IMMEDIATELY NOTIFY ENGINEER AND OWNER, AND SHALL OBTAIN DIRECTION FROM THE HAZARDOUS MATERIAL CONSULTANT PRIOR TO THE CONTINUATION OF WORK INVOLVING SUSPECTED MATERIAL.

UDIG·NY SAFE DIGGING STARTS HERE
CALL 811

UNAUTHORIZED ADDITION OR ALTERATION OF THIS PLAN IS A VIOLATION OF SECTION 7209(2) OF THE NEW YORK STATE EDUCATION LAW.

ALL PRODUCTION & INTELLECTUAL PROPERTY RIGHT RESERVED ©

CAESARS LANE WWTP EXPANSION PROJECT: PHASE 2
145 CAESARS LN.
NEW WINDSOR, NY 12553
FOR TOWN OF NEW WINDSOR
555 UNION AVE.
NEW WINDSOR, NY 12553

ELECTRICAL DETAILS

REVISIONS

NO.	DESCRIPTION	DATE

ISSUED DATE:	06 JUNE, 2025
DESIGN BY:	RRM
DRAWN BY:	CDJ
CHECKED BY:	MGR
REVIEWED BY:	JER

SHEET NO.
E-032

PROJECT # 18-732 PHASE #

GENERAL NOTES:

1. REFER TO ELECTRICAL FLOOR PLANS FOR GENERAL LOCATIONS.
2. REFER TO ELECTRICAL SCHEDULES FOR ADDITIONAL INFORMATION/REQUIREMENTS.
3. COORDINATE FINAL REQUIREMENTS CLOSELY WITH THE EQUIPMENT MANUFACTURER AND PROVIDE AS REQUIRED.
4. COORDINATE FINAL ROUGH-IN REQUIREMENTS/LOCATIONS WITH OWNER, ENGINEER, AND APPLICABLE TRADE CONTRACTOR.

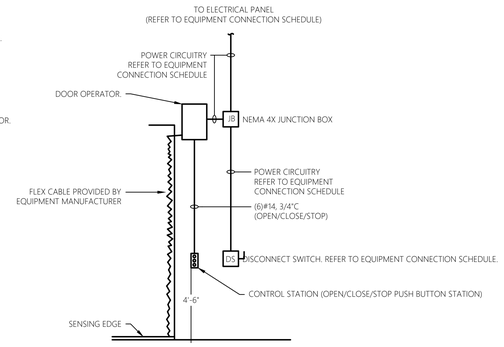

1 / E-033 TYPICAL OVERHEAD DOOR RISER DIAGRAM DETAIL

SCALE: NTS

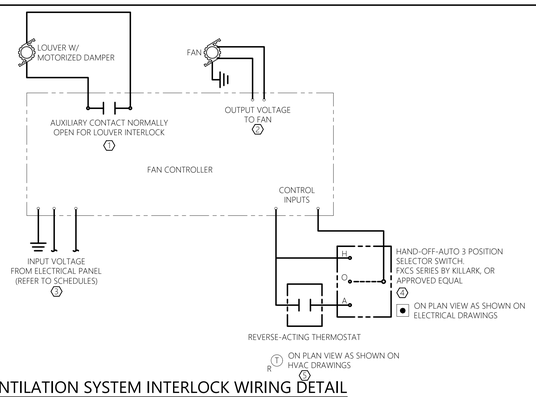

KEY NOTES:

1. MOTORIZED DAMPER TO OPEN LOUVERS WHEN FAN IS RUNNING AND CLOSE LOUVERS WHEN FAN IS OFF.
2. FAN CONTROLLER MOUNTED INTEGRAL AND PREWIRED TO FAN BY EQUIPMENT MANUFACTURER.
3. REFER TO EQUIPMENT CONNECTION SCHEDULE AND PANEL SCHEDULES FOR ADDITIONAL INFORMATION/REQUIREMENTS.
4. IN HAND MODE FAN IS TO BE ON. IN OFF MODE FAN IS TO BE OFF. IN AUTO MODE FAN IS TO OPERATE VIA REVERSE ACTING THERMOSTAT.
5. THIS CONTRACT IS RESPONSIBLE FOR PROVIDING ALL NECESSARY INTERLOCK CIRCUITRY. PROVIDE CONTROL POWER TRANSFORMER AND ENCLOSURE AS REQUIRED TO OBTAIN NECESSARY VOLTAGE FOR THERMOSTAT. REFER TO HVAC DRAWINGS AND COORDINATE WITH ALL APPLICABLE TRADE CONTRACTORS FOR THERMOSTAT LOCATIONS AND FINAL REQUIREMENTS.

8 / E-033 VENTILATION SYSTEM INTERLOCK WIRING DETAIL

SCALE: NTS

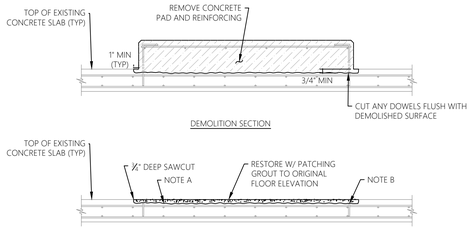

NOTES:

A. SANDBLAST OR MECHANICALLY REMOVE ALL LOOSE AND SPALLED MATERIALS. COAT EXPOSED CONCRETE WITH BONDING AGENT PRIOR TO PLACING PATCHING GROUT.

B. CUT REINFORCEMENT FLUSH AND COAT WITH CORROSION INHIBITOR.

2 / E-033 TYPICAL CONCRETE PAD DEMO/RESTORATION DETAIL

SCALE: NTS

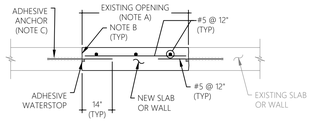

NOTES:

A. FOR OPENING DIMENSION OR DIAMETER GREATER THAN OR EQUAL TO 18", PLACE DOWELS AS SHOWN. IF OPENING DIMENSION OR DIAMETER IS LESS THAN 18", OMIT DOWELS.

B. INTENTIONALLY ROUGHEN SURFACE TO A FULL AMPLITUDE OF 1/4", CLEAN AND COAT SURFACE WITH BONDING AGENT PRIOR TO PLACING NEW CONCRETE.

C. COORDINATE EMBEDMENT LENGTH WITH ADHESIVE ANCHOR MANUFACTURER'S REQUIREMENTS TO PROVIDE FULL YIELD STRENGTH OF REINFORCING BAR.

3 / E-033 TYPICAL OPENING RESTORATION DETAIL

SCALE: NTS

GENERAL NOTES:

1. PROVIDE ALL LINE VOLTAGE WIRING (120V AND ABOVE).
2. PROVIDE NEMA-4X ENCLOSURES FOR CONTROL RELAY 'CR1' AND REQUIRED TERMINAL STRIPS. CONTRACTOR TO FIELD LOCATE AS REQUIRED.
3. ALL CONTACTS, WIRING, AND RELAYS TO BE PROVIDED BY CONTRACTOR FOR AN OVERALL COMPLETE AND OPERABLE ROOM LIGHTING / VENTILATION SYSTEM. TO CLARIFY VENTILATION SYSTEM TO BE INTERLOCKED WITH ROOM LIGHTING CIRCUIT. REFER TO ELECTRICAL PLANS AND SCHEDULES FOR LOCATIONS AND COORDINATE FINAL REQUIREMENTS CLOSELY WITH THE MECHANICAL CONTRACTOR.
4. ALL REQUIRED ELECTRICAL EQUIPMENT, COMPONENTS, DEVICES, & WIRING METHODS TO BE SUITABLE FOR ENVIRONMENT INSTALLED, INCLUDING, BUT NOT LIMITED TO, HAZARDOUS, DAMP, WET, AND CORROSIVE ENVIRONMENTS. ALL REQUIREMENTS TO BE PER NEC.
5. CR1 TO BE RIB RELAY, OR APPROVED EQUAL. PROVIDE REQUIRED CONTROL RELAY TO INTERLOCK WITH 120V LIGHTING SYSTEM.

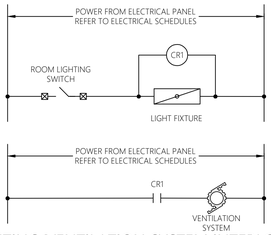

4 / E-033 TYPICAL ROOM LIGHTING/VENTILATION SYSTEM INTERLOCK CIRCUITRY DETAIL

SCALE: NTS

GENERAL NOTES:

1. DETAIL IS TYPICAL OF EACH GAS-FIRED EQUIPMENT SYSTEM.
2. PROVIDE ALL LINE VOLTAGE WIRING (120V AND ABOVE).
3. CR1 CONTACT PROVIDED FOR LOW VOLTAGE INTERLOCK WITH REFERENCED EQUIPMENT.
4. PROVIDE 30MM MUSHROOM HEAD EMERGENCY STOP. PROVIDE LABEL. SEE ELECTRICAL PLANS FOR LOCATION OF EMERGENCY STOP. INSTALL EMERGENCY STOP AT 4 FT ABOVE FINISHED FLOOR.
5. EMERGENCY STOP TO BE PUSH-TO-OPEN / TWIST-AND-PULL-TO-RESET (TO NORMALLY CLOSED).
6. PROVIDE NEMA4X ENCLOSURES FOR CR1 AND REQUIRED TERMINAL STRIPS.
7. ALL CONTACTS, WIRING, AND EMERGENCY STOPS TO BE PROVIDED BY CONTRACTOR FOR AN OVERALL COMPLETE AND OPERABLE FURNACE EMERGENCY SHUT DOWN FUNCTION .
8. COORDINATE ALL REQUIREMENTS WITH ALL APPLICABLE TRADE CONTRACTORS.

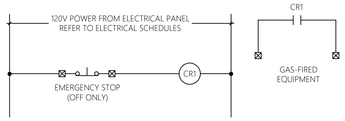

5 / E-033 TYPICAL GAS-FIRED EQUIPMENT EMERGENCY SHUT-DOWN WIRING DIAGRAM

SCALE: NTS

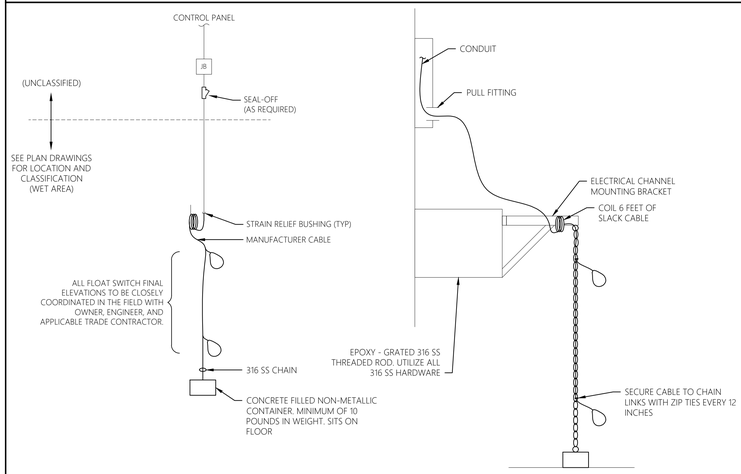

6 / E-033 TYPICAL BACKUP FLOAT WIRING DETAIL

SCALE: NTS

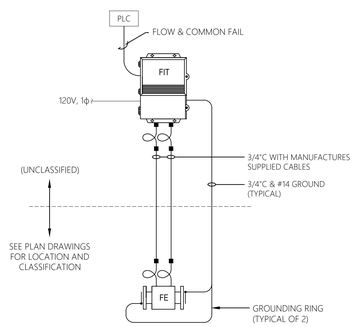

7 / E-033 TYPICAL MAGNETIC FLOWMETER WIRING DETAIL

SCALE: NTS

GENERAL NOTES:

1. CONTRACTOR TO WORK WITH CERTIFIED LIGHTNING PROTECTION INSTALLER TO PROVIDE COMPLETE BUILDING & STRUCTURE LIGHTNING PROTECTION SYSTEM IN ACCORDANCE WITH NFPA. UPON COMPLETION PROVIDE UL MASTER LABEL FOR EACH INSTALLED SYSTEM.
2. REFER TO SPECIFICATION SECTION 26 4113 - LIGHTING PROTECTION FOR ADDITIONAL INFORMATION/REQUIREMENTS.

LIGHTNING PROTECTION SYSTEMS TO BE PROVIDED FOR ALL STRUCTURES/BUILDINGS. REFER TO SPECIFICATIONS AND FLOOR PLANS.

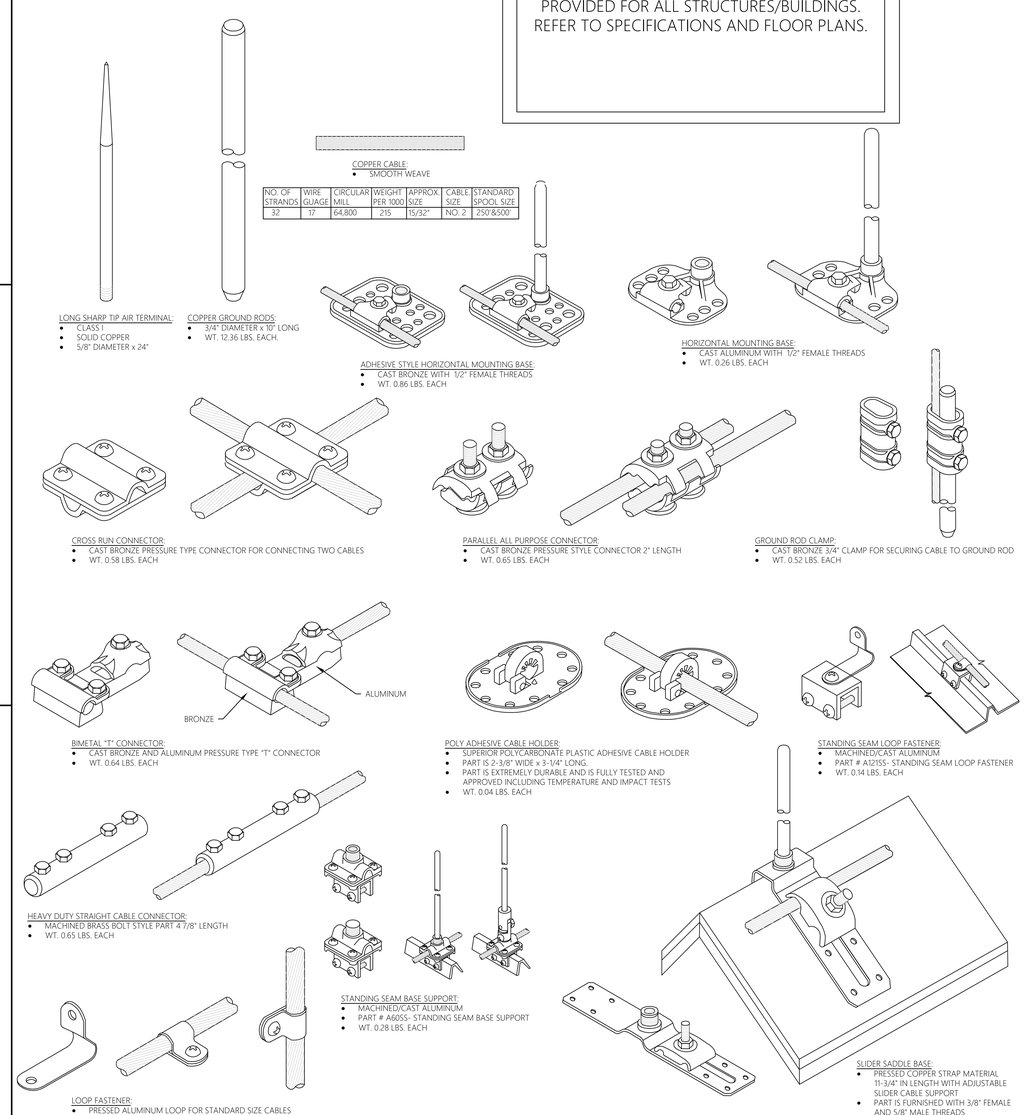

NO. OF STRANDS	WIRE GUAGE	CIRCULAR MILL	WEIGHT PER 1000'	APPROX SIZE	CABLE SIZE	STANDARD SPOOL SIZE
32	17	64,800	215	15/32"	NO. 2	250'&500'

9 / E-033 TYPICAL LIGHTNING PROTECTION & GROUNDING DETAILS

SCALE: NTS

MHE ENGINEERING
33 Airport Center Drive, Suite 202
New Windsor, NY 12553
(845) 567-3100
111 Wheatfield Drive, Suite 1
Milford, PA 18337
(570) 296-2765

BID ADDENDUM

JADE STONE ENGINEERING

STATE OF NEW YORK · JEFFREY E. ROBINSON · 095896 · PROFESSIONAL ENGINEER

HAZARDOUS MATERIAL NOTE:

THE SERVICES PROVIDED BY MHE, INCLUDING ALL WORK DEPICTED ON MHE PLANS, DO NOT INCLUDE SERVICES RELATED TO THE IDENTIFICATION, CONTROLS OR HANDLING OF HAZARDOUS MATERIALS, INCLUDING SUCH MATERIALS AS ASBESTOS AND LEAD PAINT. ALL TESTING, IDENTIFICATION, ABATEMENT, CONTROLS, AND HANDLING OF HAZARDOUS MATERIALS SHALL BE UNDERTAKEN BY A HAZARDOUS MATERIAL CONSULTANT AND CERTIFIED PROFESSIONALS. IF SUCH MATERIALS HAVE BEEN IDENTIFIED, CONTRACTOR WILL COMMUNICATE DIRECTLY WITH HAZARDOUS MATERIAL PROFESSIONAL FOR THE PERFORMANCE OF ANY WORK ON OR ADJACENT TO SAID MATERIALS. IF UNIDENTIFIED MATERIALS OF CONCERN ARE ENCOUNTERED WHILE UNDERTAKING THE WORK SHOWN HEREON, CONTRACTOR SHALL IMMEDIATELY NOTIFY ENGINEER AND OWNER, AND SHALL OBTAIN DIRECTION FROM THE HAZARDOUS MATERIAL CONSULTANT PRIOR TO THE CONTINUATION OF WORK INVOLVING SUSPECTED MATERIAL.

UDIG·NY SAFE DIGGING STARTS HERE
CALL 811

UNAUTHORIZED ADDITION OR ALTERATION OF THIS PLAN IS A VIOLATION OF SECTION 7209(2) OF THE NEW YORK STATE EDUCATION LAW.

ALL PRODUCTION & INTELLECTUAL PROPERTY RIGHT RESERVED ©

CAESARS LANE WWTP EXPANSION PROJECT: PHASE 2
145 CAESARS LN.
NEW WINDSOR, NY 12553
FOR TOWN OF NEW WINDSOR
555 UNION AVE.
NEW WINDSOR, NY 12553

ELECTRICAL DETAILS

REVISIONS

NO.	DESCRIPTION	DATE

ISSUED DATE:	06 JUNE, 2025
DESIGN BY:	RRM
DRAWN BY:	CDJ
CHECKED BY:	MGR
REVIEWED BY:	JER

SHEET NO.

E-033

PROJECT # 18-732 PHASE #

WIRING LEGEND

A	2 PAIR #14AWG FIRE ALARM WIRE, 3/4"C

GENERAL CABLING NOTES:
1. ALL FIRE ALARM CABLE SHALL BE INSTALLED WITHIN RED RGS CONDUIT, PER RACEWAY SCHEDULE. PROVIDE LABEL ON RACEWAY INDICATING FIRE ALARM CIRCUITRY WITHIN.
2. ALL WIRING TO COMPLY WITH NEC ARTICLE 760.
3. CONDUIT/RACEWAY SIZE LISTED ABOVE IS UNLESS OTHERWISE INDICATED.

FIRE ALARM LEGEND

STROBES
- FIRE ALARM STROBE WALL MOUNTED

COMBINATION HORN/STROBES
- FIRE ALARM HORN/STROBE WALL MOUNTED

INITIATION DEVICES
- F — FIRE ALARM PULL STATION
- SD — FIRE ALARM SMOKE DETECTOR
- HD — FIRE ALARM HEAT DETECTOR
- C/O — FIRE ALARM CARBON MONOXIDE DETECTOR

FIRE ALARM EQUIPMENT
- FACP — FIRE ALARM CONTROL PANEL
- NAC — NOTIFICATION APPLIANCE POWER SUPPLY
- FAA — FIRE ALARM ANNUNCIATOR PANEL
- CR — ADDRESSABLE CONTROL RELAY MODULE

NOTE, WP INDICATES WEATHERPROOF RATED DEVICE.

F/A DEVICE MOUNTING LEGEND

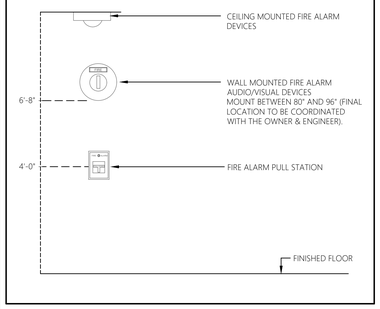

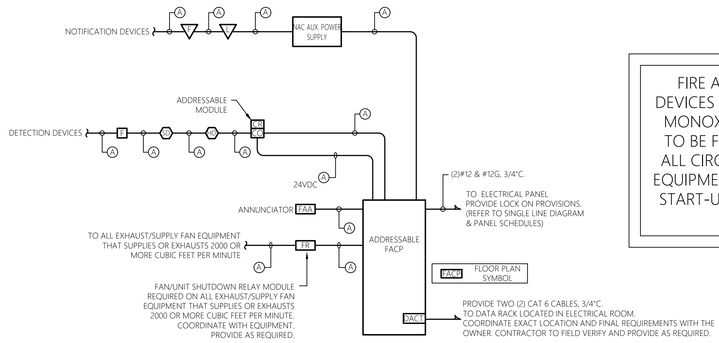

FIRE ALARM CONTROL PANEL AND ALL ASSOCIATED EQUIPMENT, COMPONENTS, AND DEVICES (HORNS, STROBES, PULL STATIONS, SMOKE DETECTORS, HEAT DETECTORS, CARBON MONOXIDE DETECTORS, ANNUNCIATORS, CONTROL RELAYS, POWER SUPPLIES, ETC...) ARE TO BE FURNISHED THRU THE CONTRACT ALLOWANCE. CONTRACTOR IS RESPONSIBLE FOR ALL CIRCUITRY (CONDUIT AND CONDUCTORS), TERMINATIONS, AND INSTALLATION OF ALL EQUIPMENT, COMPONENTS, AND DEVICES AS SHOWN AND SPECIFIED. INSPECTION, TESTING, START-UP, AND TRAINING SERVICES ARE INCLUDED BY THE EQUIPMENT SUPPLIER THRU THE CONTRACT ALLOWANCE.

1 / E-034 TYPICAL FIRE ALARM DETAIL
SCALE: NTS

GENERAL SHEET NOTES:

1. REFER TO E-001 FOR ELECTRICAL LEGENDS, ABBREVIATIONS AND GENERAL NOTES.
2. ALL CABLING SHALL BE LABELED AT EACH END, AND AT FACEPLATE. FOLLOW ADJACENT LABELING SCHEME. CABLE LABELS SHALL BE SELF LAMINATING, PANDUIT OR EQUAL. FINAL LABELING REQUIREMENTS TO BE CLOSELY COORDINATED WITH OWNER.
3. ALL CABLING SHALL BE NEATLY RUN AND SUFFICIENTLY SUPPORTED. FOLLOW NECA 1-2010 GUIDELINES.
4. PROVIDE GROUNDING PER NEC FOR ALL ELECTRICAL EQUIPMENT AND ASSOCIATED EQUIPMENT.
5. ALL PENETRATIONS TO BE PERFORMED IN A NEAT MANOR AND CAULKED. PROVIDE FIRE RATED CAULK WHERE REQUIRED.
6. ALL CABLING SHALL BE TESTED FOR PROPER IDENTIFICATION AND CONTINUITY. ALL OPENS, SHORTS, CROSSES, GROUNDS AND REVERSALS SHALL BE CORRECTED.
7. CONTRACTOR TO COORDINATE ALL PROPOSED WORK WITH THE OWNER.
8. EXACT ROUTING OF HORIZONTAL CABLING SHALL BE DETERMINED BY CONTRACTOR IN FIELD.
9. CONTRACTOR SHALL SUBMIT PRODUCT/SUBMITTAL DATA ON ALL MATERIALS SHOWN ON THIS SHEET FOR APPROVAL BY ENGINEER AND OWNER, PRIOR TO PURCHASE/INSTALL.

SHEET KEY NOTES:

1. CONTRACTOR TO PROVIDE UTP PATCH PANEL FOR ALL NEW DEVICES. UTP PATCH PANEL TO BE MODEL 49255-D24 (24 PORT), 1RU AS MANUFACTURED BY LEVITON OR APPROVED EQUAL. PROVIDE PATCH CABLES AS REQUIRED. PATCH CABLES TO BE AS MANUFACTURED BY SUPERIOR ESSEX OR APPROVED EQUAL. FINAL REQUIREMENTS TO BE CLOSELY COORDINATED WITH OWNER PRIOR TO INSTALLATION & TERMINATIONS.
2. CONTRACTOR TO PROVIDE VERTICAL CABLE MANAGEMENT SYSTEMS WITHIN THE RACK ENCLOSURE ON EACH SIDE AS REQUIRED TO FACILITATE A NEAT CABLE MANAGEMENT SYSTEM. VERTICAL CABLE MANAGEMENT SYSTEMS TO BE VERSI DUCT (LENGTH TO SUIT RACK HEIGHT) AS MANUFACTURED BY LEVITON OR APPROVED EQUAL. FINAL REQUIREMENTS TO BE CLOSELY COORDINATED WITH OWNER PRIOR TO PURCHASE AND INSTALLATION.
3. CONTRACTOR TO PROVIDE HORIZONTAL CABLE MANAGEMENT SYSTEMS WITHIN THE RACK ENCLOSURE AS REQUIRED TO FACILITATE A NEAT CABLE MANAGEMENT SYSTEM. HORIZONTAL CABLE MANAGEMENT SYSTEMS TO BE MODEL 49253-LPM, 1RU, 4" D-SHAPE RINGS AS MANUFACTURED BY LEVITON OR APPROVED EQUAL. FINAL REQUIREMENTS TO BE CLOSELY COORDINATED WITH OWNER PRIOR TO PURCHASE AND INSTALLATION.
4. CONTRACTOR SHALL DETERMINE HOMERUN ROUTE IN FIELD. ALL THRU-WALL PENETRATIONS TO BE PROPERLY SEALED WITH APPROPRIATE FIRE PROOFING.
5. CONTRACTOR TO PROVIDE 10-SPACE SBX SERIES WALL MOUNTED RACK WITH TOP AND BOTTOM 4-1/2" FANS MODEL #AXS-FAN, BOTH AS MANUFACTURED BY MIDDLE ATLANTIC OR APPROVED EQUAL. CONTRACTOR TO PROVIDE ALL REQUIRED CIRCUITRY FOR FAN CONNECTION/OPERATION. FINAL REQUIREMENTS TO BE CLOSELY COORDINATED WITH OWNER PRIOR TO INSTALLATION & TERMINATIONS.
6. CONTRACTOR TO PROVIDE ALL REQUIRED EQUIPMENT WITHIN RACK ENCLOSURE TO FACILITATE MOUNTING OF PROPOSED EQUIPMENT INCLUDING BUT NOT LIMITED TO; REAR RACKRAIL (RRF10) AS MANUFACTURED BY MIDDLE ATLANTIC OR APPROVED EQUAL. FINAL REQUIREMENTS TO BE CLOSELY COORDINATED WITH OWNER PRIOR TO INSTALLATION & TERMINATIONS.
7. CONTRACTOR TO PROVIDE 24-PORT FULLY MANAGED NETWORK SWITCH AS MANUFACTURED BY CISCO MERAKI MS130-24P WITH LIC-MS130-24-5YR, OR APPROVED EQUAL. PROVIDE WITH WIRELESS ACCESS POINT AS MANUFACTURED BY CISCO MERAKI MR28-HW WITH LIC-ENT-5YR, OR APPROVED EQUAL. PROVIDE SFP MODULES AXS85-192-M3 MANUFACTURED BY 10GTEK, OR APPROVED EQUAL. CONTRACTOR TO INSTALL WITHIN THE RACK UNDER THIS CONTRACT. FINAL REQUIREMENTS TO BE CLOSELY COORDINATED WITH OWNER PRIOR TO INSTALLATION & TERMINATIONS.
8. CONTRACTOR SHALL BE RESPONSIBLE FOR TERMINATIONS, TESTING, AND GROUNDING. COORDINATE ALL REQUIREMENTS WITH THE OWNER. INSTALLATION TO COMPLY WITH ALL APPLICABLE CODES AND STANDARDS. UPON COMPLETION OF TESTING TURN A COPY OF THE TESTING REPORT OVER TO THE OWNER AND ENGINEER.
9. CONTRACTOR TO PROVIDE FIBER OPTIC PATCH PANEL WITHIN DATA RACK. CONTRACTOR TO PROVIDE REQUIRED CONNECTORS AND TERMINATE CABLE. CONTRACTOR TO COORDINATE FINAL REQUIREMENTS WITH THE OWNER.
10. CONTRACTOR TO FUSION SPLICE PROPOSED FIBER OPTIC CABLE ON PROPOSED FIBER OPTIC PATCH PANEL WITHIN DATA RACK.
11. PROVIDE 3/4" CONDUIT WITH CAT 6 CABLE BACK TO LOCATION OF SECURITY CONTROL PANEL. REFER TO ELECTRICAL PLANS FOR QUANTITIES AND GENERAL LOCATIONS. COORDINATE FINAL QUANTITIES AND LOCATIONS WITH OWNER AND ENGINEER PRIOR TO ROUGH-IN.
12. 12-STRAND, MULTI-MODE (50 MICRON CORE / 125 MICRON CLADDING DIAMETER), FIBER OPTIC CABLE, 4"C. PROVIDE MAXCELL FABRIC INNERDUCT WITHIN 4" CONDUIT. PROVIDE AS MAXCELL 4" 3-CELL PRODUCT. INSTALL PROPOSED FIBER OPTIC CABLE WITHIN 1-CELL OF THE PROPOSED INNERDUCT AND A PULL STRING THROUGH THE OTHER TWO (2) CELLS. FIBER OPTIC CABLE TO BE CONTINUOUS (NO SPLICES) AND SUITABLE FOR INDOOR/OUTDOOR APPLICATIONS, AS WELL AS, SUITABLE FOR DIRECT BURIAL APPLICATIONS. FIBER OPTIC CABLE TO BE MODEL CLEARCURVE AS MANUFACTURED BY CORNING OR APPROVED EQUAL. SUBMIT PRODUCT DATA TO ENGINEER FOR REVIEW DURING SUBMITTAL PHASE. CONTRACTOR RESPONSIBLE FOR ALL REQUIRED CONNECTORS, TERMINATIONS, AND TESTING. PROVIDE PATCH CABLES AS REQUIRED. COORDINATE FINAL LOCATIONS AND TERMINATION REQUIREMENTS WITH OWNER AND ENGINEER.
13. SECURITY CONTROL PANEL AND ALL ASSOCIATED EQUIPMENT, COMPONENTS, AND DEVICES (ACCESS CARD READERS, CAMERAS, ETC...) ARE TO BE FURNISHED THRU THE CONTRACT ALLOWANCE. CONTRACTOR IS RESPONSIBLE FOR ALL CIRCUITRY (CONDUIT AND CONDUCTORS), TERMINATIONS, AND INSTALLATION OF ALL EQUIPMENT, COMPONENTS, AND DEVICES AS SHOWN AND SPECIFIED. INSPECTION, TESTING, START-UP, AND TRAINING SERVICES ARE INCLUDED BY THE EQUIPMENT SUPPLIER THRU THE CONTRACT ALLOWANCE.
14. CONTRACTOR TO INSTALL RECEPTACLE WITHIN RACK AND POWER FROM BUILDING LVP PANEL. REFER TO ELECTRICAL SCHEDULES FOR ADDITIONAL INFORMATION / REQUIREMENTS. CONTRACTOR TO PROVIDE AND INSTALL AN UNINTERRUPTIBLE POWER SUPPLY (UPS) WITHIN RACK. UPS TO BE MANUFACTURED BY CYBERPOWER MODEL OR500LCDRM1U, OR APPROVED EQUAL.

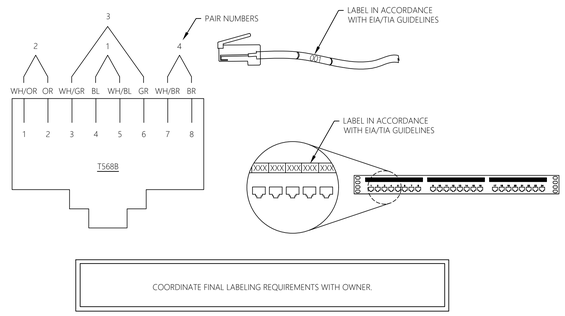

2 / E-034 TYPICAL UTP PUNCHDOWN & LABLING DETAIL
SCALE: NTS

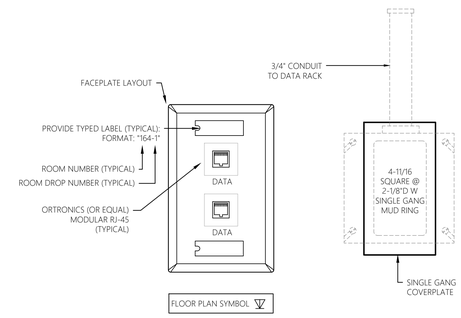

4 / E-034 TYPICAL DATA BOX INSTALLATION DETAIL
SCALE: NTS

TYPICAL OF FIVE (5) DATA RACKS. MBR BUILDING, ATAD BUILDING, DEWATERING BUILDING, HEADWORKS BUILDING, & GARAGE.

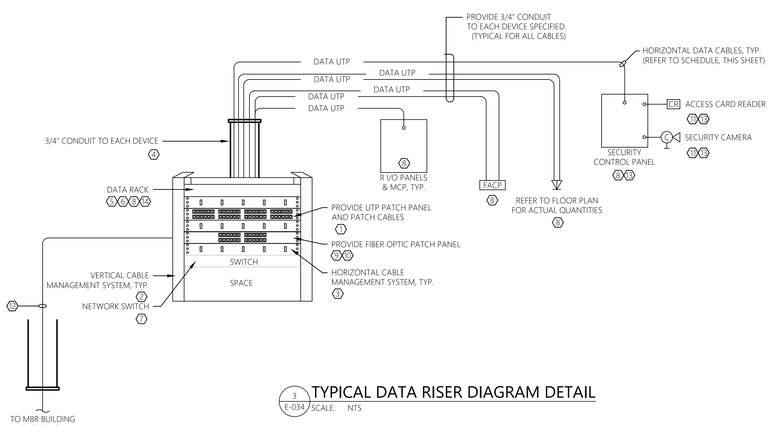

3 / E-034 TYPICAL DATA RISER DIAGRAM DETAIL
SCALE: NTS

HORIZONTAL UTP CABLING

	CABLE COLOR				UTP TYPE				INSULATION			RJXX JACK COLOR				CONFIG.		HOMERUN LOCATION
	BLUE	WHITE	PURPLE	RED	GRAY	CAT 5e	CAT 6	CAT 6A	CAT 3 CAT5E	RG-8	PLENUM	RISER	GENERAL	RED	BLACK	IVORY	BLUE	OTHER	T568A	T568B	
DATA	●				●		●				●							●		●	DATA RACK (ELECTRICAL ROOM)

GENERAL SCHEDULE NOTES:

1. COORDINATE FINAL CABLING, DEVICE, AND FACEPLATE COLORS WITH OWNER AND ENGINEER. CONTRACTOR TO COORDINATE FINAL COLORS DURING THE SUBMITTAL PHASE.
2. ALL CABLING TO BE LABELED AT EACH END.

REMARKS:

1. PROVIDE A DEDICATED CABLE FOR EACH JACK IDENTIFIED ON THE PLANS/DETAILS.
2. REFER TO ELECTRICAL PLANS FOR QUANTITIES & GENERAL LOCATIONS.
3. CONFIRM PUNCHDOWN SCHEME REQUIRED (T568B OR T568A) WITH OWNER PRIOR TO PUNCHDOWN (T568B SHOWN ON THIS DRAWING).

MHE ENGINEERING
33 Airport Center Drive, Suite 202
New Windsor, NY 12553
(845) 587-3100
111 Wheatfield Drive, Suite 1
Milford, PA 18337
(570) 296-2765

BID ADDENDUM

JADE STONE ENGINEERING

STATE OF NEW YORK — JEFFREY E. ROBINSON — 095896 — LICENSED PROFESSIONAL ENGINEER

HAZARDOUS MATERIAL NOTE:
THE SERVICES PROVIDED BY MHE, INCLUDING ALL WORK DEPICTED ON MHE PLANS, DO NOT INCLUDE SERVICES RELATED TO THE IDENTIFICATION, CONTROLS OR HANDLING OF HAZARDOUS MATERIALS, INCLUDING SUCH MATERIALS AS ASBESTOS AND LEAD PAINT. ALL TESTING, IDENTIFICATION, ABATEMENT, CONTROLS, AND HANDLING OF HAZARDOUS MATERIALS SHALL BE UNDERTAKEN BY A HAZARDOUS MATERIAL CONSULTANT AND CERTIFIED PROFESSIONALS. IF SUCH MATERIALS HAVE BEEN IDENTIFIED, CONTRACTOR WILL COMMUNICATE DIRECTLY WITH HAZARDOUS MATERIAL PROFESSIONAL FOR THE PERFORMANCE OF ANY WORK ON OR ADJACENT TO SAID MATERIALS. IF UNIDENTIFIED MATERIALS OF CONCERN ARE ENCOUNTERED WHILE UNDERTAKING THE WORK SHOWN HEREON, CONTRACTOR SHALL IMMEDIATELY NOTIFY ENGINEER AND OWNER, AND SHALL OBTAIN DIRECTION FROM THE HAZARDOUS MATERIAL CONSULTANT PRIOR TO THE CONTINUATION OF WORK INVOLVING SUSPECTED MATERIAL.

UDIG·NY SAFE DIGGING STARTS HERE
CALL 811

UNAUTHORIZED ADDITION OR ALTERATION OF THIS PLAN IS A VIOLATION OF SECTION 7209(2) OF THE NEW YORK STATE EDUCATION LAW.

ALL PRODUCTION & INTELLECTUAL PROPERTY RIGHT RESERVED ©

CAESARS LANE WWTP EXPANSION PROJECT: PHASE 2
145 CAESARS LN.
NEW WINDSOR, NY 12553
FOR TOWN OF NEW WINDSOR
555 UNION AVE.
NEW WINDSOR, NY 12553

ELECTRICAL DETAILS

REVISIONS

NO.	DESCRIPTION	DATE

ISSUED DATE:	06 JUNE, 2025
DESIGN BY:	RRM
DRAWN BY:	CDJ
CHECKED BY:	MGR
REVIEWED BY:	JER

SHEET NO.
E-034

PROJECT # 18-732 PHASE #

FIG. 17

SHEET 1 OF 4

E 01-04-002.3

SINGLE HELIX SCREW ANCHORS

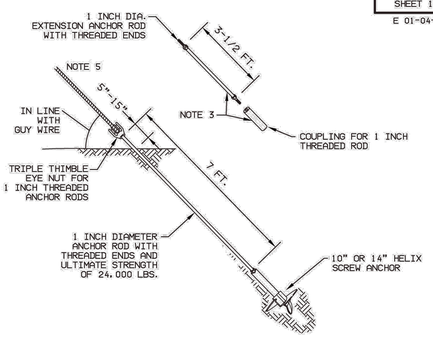

INSTALLATION REQUIREMENTS								
SOIL CLASS (SEE ANCHOR MANUFACTURER LITERATURE)		2	3	4	5	6	7
10" HELIX	INSTALL TORQUE (FT/LBS)	6,000	4,000	2,500	1,750	1,250	500
	EXPECTED HOLDING CAPACITY (LBS.)	28,000	24,500	20,500	16,000	14,000	8,500
14" HELIX	INSTALL TORQUE (FT/LBS)	7,000	4,000	3,000	2,000	1,500	750
	EXPECTED HOLDING CAPACITY (LBS.)	32,000	28,000	24,000	20,000	16,000	12,500

NOTES:

1. A TORQUE INDICATOR SHALL BE USED ON EACH INSTALLATION TO INSURE THAT PROPER TORQUE IS OBTAINED.
2. EXCESSIVE DOWNWARD THRUST ON INSTALLATION WILL CLOSE THE HELIX AND MAKE INSTALLATION IMPOSSIBLE.
3. IF SOIL IS NOT FIRM ENOUGH TO PROVIDE PROPER TORQUE, ADD UP TO TWO (2) EXTENSIONS. IF PROPER TORQUE ISN'T MET AFTER ADDING TWO EXTENSIONS, REMOVE ANCHOR AND INSTALL APPROPRIATE ALTERNATE ANCHOR.
4. AFTER ACHIEVING PROPER TORQUE, INSTALL ANCHOR ROD BETWEEN 5" AND 15" ABOVE GROUND.

ELECTRIC STANDARDS	CENTRAL HUDSON GAS & ELECTRIC CORP.	DATE 10-1-18
DRWN. ____ CLEAR. ____ ENGR. ____ APPD. ____	ANCHOR INSTALLATIONS	ISSUE / APP. / APP.

1 E-035 TYPICAL GUY SCREW ANCHOR DETAIL
SCALE: NTS

FIG. 19

SHEET 1 OF 2

E 01-08-001.0

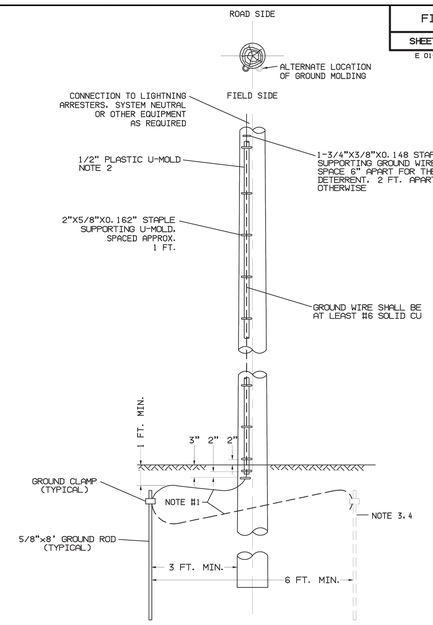

ELECTRIC STANDARDS	CENTRAL HUDSON GAS & ELECTRIC CORP.	DATE 8-7-18
DRWN. ____ DSGN. ____ APPD. ____	GENERAL - GROUNDS AND GROUND GRIDS GROUND INSTALLATION AT WOOD POLE BASE MULTI - GROUNDED COMMON NEUTRAL SYSTEM	ISSUE / APP. / APP.

2 E-035 TYPICAL POLE GOUNDING DETAIL
SCALE: NTS

FIG. 19

SHEET 2 OF 2

NOTES:

1. CONNECTING WIRES TO BE SLACK TO AVOID BREAKAGE DUE TO FROST ACTION.
2. PLASTIC MOLDING TO COVER GROUND WIRE ALONG FULL RUN ON POLE.
3. AT THE LAST GROUND INSTALLATION ON PRIMARY LINES, INCLUDING PRIVATE SPURS, DRIVE ONE ADDITIONAL ROD AND CONNECT AS SHOWN.
4. ADDITIONAL ROD TO BE CONNECTED WITH CONTINUOUS WIRE LOOPED THROUGH ROD CONNECTORS.
5. A COMMON NEUTRAL CONDUCTOR REQUIRES A MINIMUM OF FOUR GROUNDS AT SEPARATE LOCATIONS PER MILE EITHER AS EQUIPMENT GROUNDS OR AS SEPARATE INSTALLATIONS.
6. IF NECESSARY TO SPLICE GROUNDING CONDUCTOR ABOVE GROUND, USE COMPRESSION SPLICE.

ELECTRIC STANDARDS	CENTRAL HUDSON GAS & ELECTRIC CORP.	DATE 8-7-18
DRWN. ____ DSGN. ____ APPD. ____	GENERAL - GROUNDS AND GROUND GRIDS GROUND INSTALLATION AT WOOD POLE BASE MULTI - GROUNDED COMMON NEUTRAL SYSTEM	ISSUE / APP. / APP.

FIG. 21

SHEET 1 OF 1

E 05-01-004.0

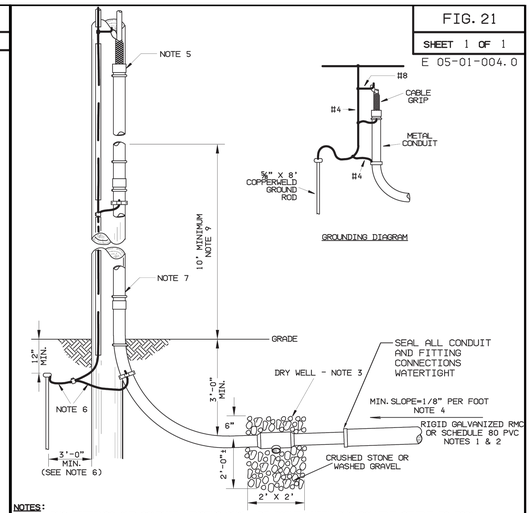

NOTES:

1. ALL PVC FITTINGS AND CONDUIT LENGTHS SHALL BE JOINED WITH PVC SOLVENT CEMENT TO FORM WATERTIGHT JOINTS. SCHEDULE 80 PVC SHALL BE USED UNDER AREAS SUBJECT TO VEHICLE TRAFFIC. SCHEDULE 40 PVC IS ACCEPTABLE IN OTHER AREAS.
2. SEAL TERMINAL END OF ACTIVE CONDUITS WITH FOAM OR CAULK DESIGNED TO RESIST WATER PENETRATION. MATCH FOAM OR CAULK WITH CONDUIT MATERIAL.
3. DRY WELL NOT REQUIRED IF DUCTS TERMINATE IN A MANHOLE OR PULLBOX.
4. DUCTS SHOULD SLOPE TOWARDS DRY WELL WHEN DRY WELL IS USED. OTHERWISE SLOPE DUCTS TOWARD MANHOLE OR PULLBOX.
5. SEAL TOP OF DUCT AFTER CABLE IS IN PLACE.
6. CONNECTING WIRES TO BE SLACK TO AVOID BREAKAGE DUE TO FROST ACTION.
7. LOCATE RISER CONDUIT ON SIDE OF POLE OPPOSITE TO TRAFFIC DIRECTION.
8. SUPPLEMENTAL GROUND IS REQUIRED IF GROUND RESISTANCE IS GREATER THAN 25 OHMS. SEE NEC SECTION 250.53.
9. FOR SECONDARY RISER SYSTEMS, RIGID METAL CONDUIT IS REQUIRED FOR THE FIRST 10 FEET ABOVE GRADE. RIGID METAL CONDUIT IS REQUIRED FOR ALL ABOVE GRADE CONDUIT FOR PRIMARY RISER SYSTEMS.

ELECTRIC STANDARDS	CENTRAL HUDSON GAS & ELECTRIC CORP.	DATE 8/29/23
DRWN. GC CLEAR. ____ ENGR. ____ APPD. ____	UNDERGROUND CONSTRUCTION CONDUIT RISER INSTALLATION NON VENTILATED	ISSUE 1 / APP. / APP.

3 E-035 TYPICAL PRIMARY CONDUIT RISER DETAIL
SCALE: NTS

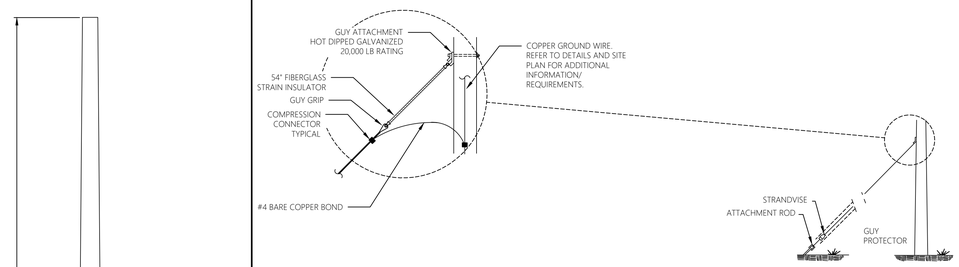

5 E-035 TYPICAL GROUNDED GUY DETAIL
SCALE: NTS

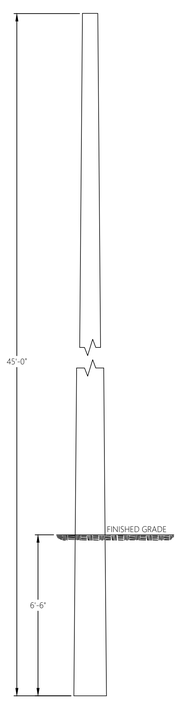

NOTES:

1. PROVIDE UTILITY POLE AS 45-FOOT, CLASS 2, TREATED SOUTHERN YELLOW PINE, OR AS REQUIRED BY THE UTILITY.
2. POLE IS TO BURIED 6'-6" BELOW FINISHED GRADE, OR AS REQUIRED BY UTILITY.
3. REFER TO OTHER DETAILS ON THIS SHEET FOR EQUIPMENT TO BE MOUNTED TO POLE BY THIS CONTRACT.
4. COORDINATE ALL REQUIREMENTS WITH ENGINEER AND UTILITY.

4 E-035 TYPICAL WOOD POLE INSTALLATION DETAIL
SCALE: NTS

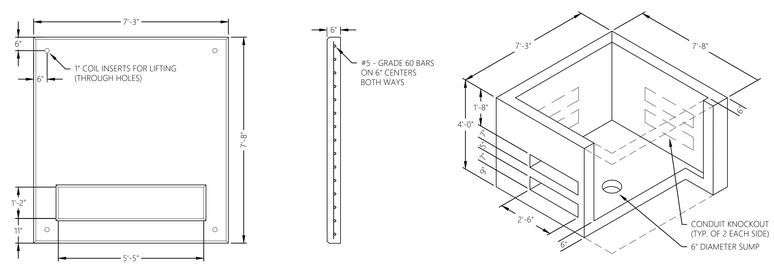

PAD - PLAN PAD - SECTION VAULT

NOTES:

1. ALL MATERIALS AND WORKMANSHIP SHALL CONFORM TO ACI-318.
2. CONCRETE TO HAVE A MINIMUM STRENGTH OF 5000 P.S.I. AFTER 28 DAYS. AIR ENTRAINMENT TO BE 6% ±1%. ALL EXPOSED EDGES TO HAVE A 3/4" CHAMFER.
3. REINFORCING TO BE #5 - GRADE 60 BARS AND SHALL CONFORM TO ASTM A-615 OF LATEST DATE. REINFORCING TO BE PLACED A MINIMUM OF 2" CLEAR FROM FACE OF CONCRETE.
4. ALL OPENINGS SHALL HAVE ADDITIONAL REBAR REINFORCEMENT OF 1-#5 EACH CORNER, MID-DEPTH.
5. LIFTING ANCHORS SHALL BE INSTALLED WITH APPROPRIATE DAYTON LIFTING ANCHORS OR EQUIVALENT.
6. CONTRACTOR SHALL SEAL SECONDARY CONDUITS WITH EXPANDING FOAM AND SHALL ALSO GROUT PRIMARY & SECONDARY CONDUIT OPENINGS ON PAD.
7. REFER TO ELECTRICAL SITE PLAN FOR GENERAL LOCATIONS OF EQUIPMENT AND ELECTRICAL SINGLE LINE DIAGRAM FOR ADDITIONAL INFORMATION/REQUIREMENTS.
8. TRANSFORMER PAD SHALL BE CAST IN PLACE OR MANUFACTURED PRECAST TYPE AS MANUFACTURED BY LAKELANDS CONCRETE PRODUCTS, OR APPROVED EQUAL.
9. COORDINATE FINAL REQUIREMENTS CLOSELY WITH THE UTILITY. PROVIDE AS REQUIRED. REFER TO 'GENERAL NOTES' SECTION ON SHEET E-001 FOR UTILITY CONTACT INFORMATION AND PROJECT WORK ORDER NUMBER. CONTRACTOR IS TO REFERENCE WORK ORDER NUMBER WHEN CONTACTING THE UTILITY.
10. REFER TO SITE PLAN AND SINGLE LINE DIAGRAM FOR GROUNDING INFORMATION/REQUIREMENTS.

6 E-035 TYPICAL TRANSFORMER PAD AND VAULT DETAIL
SCALE: NTS

FIG. 50

SHEET 1 OF 1

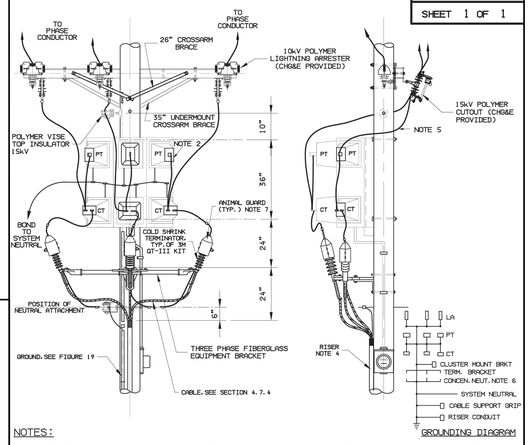

NOTES:

1. COMPANY SHALL SUPPLY CUTOUTS, METER TEST SWITCHES, CURRENT AND POTENTIAL TRANSFORMERS, METER WIRE, CT/PT MOUNTING CLUSTER, AND CONDUIT. COMPANY WILL ENERGIZE THE METER AND TERMINATIONS. POLE INSTALLATION AND ALL OTHER WORK SHALL BE BY CUSTOMER ON CUSTOMER OWNED POLES.
2. PT'S MAY BE ROTATED 90° IF NECESSARY.
3. HARDWARE TO BE 5/8" AND GALVANIZED. USE DOUBLE COIL WASHERS ON ALL POLE MOUNTED HARDWARE.
4. MINIMUM CONDUIT SIZE: 4 INCH. CONDUIT FILL SHALL NOT EXCEED 40%
5. CONDUCTOR FROM OPEN WIRE TO TERMINATOR SHALL BE COVERED CONDUCTOR AND SHALL BE AT LEAST ELECTRICALLY EQUIVALENT (AMPACITY) TO RISER CABLE CONDUCTOR. FOR EXAMPLE, USE #2 CU FOR 1/0 AL CABLE.
6. LEAD BETWEEN CONCENTRIC NEUTRAL AND SYSTEM NEUTRAL SHALL BE ELECTRICALLY EQUIVALENT (AMPACITY) TO THE CONCENTRIC NEUTRAL:

   30-55-349 & 30-55-420: 15KV #2 AL URD CABLE WITH 10-#14 AWG CONCENTRIC NEUTRAL - USE #4 CU.

   30-55-361: 15KV 4/0 AL URD CABLE WITH 20-#12 AWG CONCENTRIC NEUTRAL - USE 1/0 CU.
7. ANIMAL GUARDS MUST BE INSTALLED FOLLOWING MANUFACTURER RECOMMENDATIONS ON TERMINATOR TO PROTECT AGAINST ANIMAL CONTACT.
8. THE COMPANY MAINTAINS 34.5KV DISTRIBUTION SYSTEMS IN THE TOWNS OF HUNTER, JEWETT & LEXINGTON. COORDINATE WITH THE COMPANY IF 34.5KV EQUIPMENT IS REQUIRED PRIOR TO INSTALLATION WHERE WORKING IN THESE LOCATIONS.

ELECTRIC STANDARDS	CENTRAL HUDSON GAS & ELECTRIC CORP.	DATE 9/18/23
DRWN. GC CLEAR. ____ ENGR. ____ APPD. ____	CUSTOMER POLE - 13.2kV THREE PHASE PRIMARY METERING INSTALLATION - RISER POLE TO OVERHEAD	ISSUE 1 / APP. / APP.

7 E-035 TYPICAL PRIMARY METERING INSTALLATION DETAIL
SCALE: NTS

MHE ENGINEERING

33 Airport Center Drive, Suite 202
New Windsor, NY 12553
(845) 567-3100

111 Wheatfield Drive, Suite 1
Milford, PA 18337
(570) 296-2765

BID ADDENDUM

JADE STONE ENGINEERING

STATE OF NEW YORK · JEFFREY E. ROBINSON · 095896 · LICENSED PROFESSIONAL ENGINEER

HAZARDOUS MATERIAL NOTE:

THE SERVICES PROVIDED BY MHE, INCLUDING ALL WORK DEPICTED ON MHE PLANS, DO NOT INCLUDE SERVICES RELATED TO THE IDENTIFICATION, CONTROLS OR HANDLING OF HAZARDOUS MATERIALS, INCLUDING SUCH MATERIALS AS ASBESTOS AND LEAD PAINT. ALL TESTING, IDENTIFICATION, ABATEMENT, CONTROLS, AND HANDLING OF HAZARDOUS MATERIALS SHALL BE UNDERTAKEN BY A HAZARDOUS MATERIAL CONSULTANT AND CERTIFIED PROFESSIONALS. IF SUCH MATERIALS HAVE BEEN IDENTIFIED, CONTRACTOR WILL COMMUNICATE DIRECTLY WITH HAZARDOUS MATERIAL PROFESSIONAL FOR THE PERFORMANCE OF ANY WORK ON OR ADJACENT TO SAID MATERIALS. IF UNIDENTIFIED MATERIALS OF CONCERN ARE ENCOUNTERED WHILE UNDERTAKING THE WORK SHOWN HEREON, CONTRACTOR SHALL IMMEDIATELY NOTIFY ENGINEER AND OWNER, AND SHALL OBTAIN DIRECTION FROM THE HAZARDOUS MATERIAL CONSULTANT PRIOR TO THE CONTINUATION OF WORK INVOLVING SUSPECTED MATERIAL.

UDIG·NY SAFE DIGGING STARTS HERE CALL 811

UNAUTHORIZED ADDITION OR ALTERATION OF THIS PLAN IS A VIOLATION OF SECTION 7209(2) OF THE NEW YORK STATE EDUCATION LAW.

ALL PRODUCTION & INTELLECTUAL PROPERTY RIGHT RESERVED ©

CAESARS LANE WWTP EXPANSION PROJECT: PHASE 2

145 CAESARS LN.
NEW WINDSOR, NY 12553

FOR TOWN OF NEW WINDSOR
555 UNION AVE.
NEW WINDSOR, NY 12553

ELECTRICAL DETAILS

REVISIONS

NO.	DESCRIPTION	DATE

ISSUED DATE:	06 JUNE, 2025
DESIGN BY:	RRM
DRAWN BY:	CDJ
CHECKED BY:	MGR
REVIEWED BY:	JER

SHEET NO.

E-035

PROJECT # 18-732 PHASE #

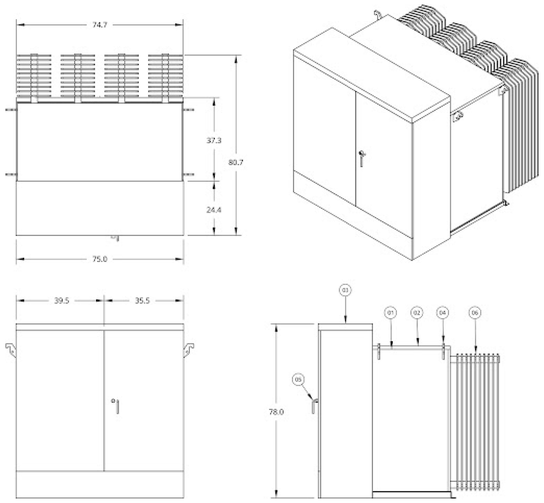

LEGEND	
ITEM	DESCRIPTION
01	TANK
02	BOLT-ON LID
03	CABINET
04	LIFTING HOOKS
05	PAD-LOCKABLE DOOR HANDLE
06	COOLING RADIATORS

TAP SETTINGS		
TAPS	VOLTAGE	AMPERAGE
A	13860	104.1
B	13530	106.7
C	13200	109.3
D	12870	112.2
E	12540	115.1

APPROX. WEIGHT: 15667 LBS

DESCRIPTION		
KVA:	2500	AMPS
HIGH VOLTAGE:	13200 GY/ 7620, 95 kV BIL	109.3
LOW VOLTAGE:	480 Y/ 277, 30 kV BIL	3007.1
HV BUSHINGS:	(6) 15kV 200A Wells & Inserts (dead front loop feed)	
LV BUSHINGS:	(4) 10-Hole Spades w/ Supports, Common H0/X0	
TEMP RISE:	65C	
COOLING CLASS:	KNAN	
CONDUCTOR:	Al / Al	
FLUID:	FR3	
TYPE:	General Purpose	
ARRESTERS:	(3) 10 kV, 8.4 kV MCOV Arresters	
PROTECTION:	Current Sensing Bayonets w/ CLFs	
SWITCH:	4 Pos. LBOR	
ACCESSORIES:	-Dial-Type Thermometer	
	-Liquid Level Gauge	
	-Pressure Vacuum Gauge	
	-Grounding Provisions	
	-Schrader Valve	
	-Drain & Sample Valve	
	-Pressure Relief Valve	
	-UL Listed, Made in USA	

NOTES:

1) TRANSFORMER IS MANUFACTURED AND TESTED PER LATEST APPLICABLE ANSI AND IEEE STANDARDS
2) UNLESS OTHERWISE SPECIFIED, DIMENSIONS ARE IN INCHES
3) TRANSFORMER MEETS OR EXCEEDS 2016 EFFICIENCY STANDARDS AS APPLICABLE
4) STANDARD PAINT
5) TRANSFORMER IS UL LISTED, MADE IN USA
6) TANK MATERIAL IS STAINLESS CABINET TANK & RADIATORS

Maddox

1 / E-036 PAD-MOUNTED TRANSFROMER
SCALE: NTS

GENERAL NOTES:
1. BACK PAINT METALS IN CONTACT WITH CONCRETE WITH 5 MILS OF TNEMEC SETIES 66-GRAY, HIGH BUILD EPOXOLINE, DUPONT 25P EPOXY, OR EQUAL.
2. ALL MOUNTING HARDWARE TO BE STAINLESS STEEL.
3. COORDINATE REQUIREMENTS CLOSELY WITH CONTRACT 'IG.

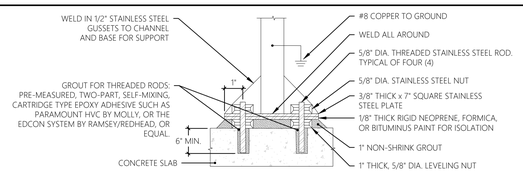

2 / E-036 TYPICAL BASE DETAIL
SCALE: NTS

GENERAL NOTES:
1. MOUNTING STAND TO BE FABRICATED/CONSTRUCTED OF STEEL MATERIALS.
2. ALL DISCONNECTS, PANELBOARDS, AND ELECTRICAL EQUIPMENT SHALL BE LOCATED FIVE (5) FEET ABOVE GRADE (ON CENTER) AND COMPLY WITH NEC REQUIREMENTS, UNLESS OTHERWISE INDICATED.
3. CONDUIT AND ELECTRICAL EQUIPMENT TO BE SUPPORTED/BRACED (UNISTRUT CROSS MEMBER) AT MINIMUM EVERY 12".
4. NOT ALL ELECTRICAL EQUIPMENT MOUNTED TO MOUNTING STAND MAY BE SHOWN. DETAIL IS DIAGRAMMATIC IN NATURE. SIZE AND ARRANGE PANELS AND ELECTRICAL EQUIPMENT TO FIT MOUNTING STAND. UTILIZE BOTH SIDES OF ELECTRICAL MOUNTING STAND AS REQUIRED.
5. ALL REQUIREMENTS TO BE PER NEC.
6. QUANTITY OF CONDUITS/CIRCUITS SHOWN IN DETAIL IS DIAGRAMMATIC IN NATURE. REFER TO ELECTRICAL SITE PLAN, SCHEDULES, AND SINGLE LINE DIAGRAMS FOR SPECIFIC QUANTITIES.
7. COORDINATE ALL ELECTRICAL EQUIPMENT MOUNTED TO ELECTRICAL MOUNTING STAND AND FINAL LOCATION WITH THE OWNER.
8. CONTRACTOR TO PROVIDE NAMEPLATE FOR ALL EQUIPMENT PER SPECIFICATIONS.
9. NOTE, SPARE CONDUITS NOT SHOWN FOR CLARITY. REFER TO SINGLE LINE DIAGRAMS AND RISER DIAGRAMS FOR ADDITIONAL REQUIREMENTS/INFORMATION.

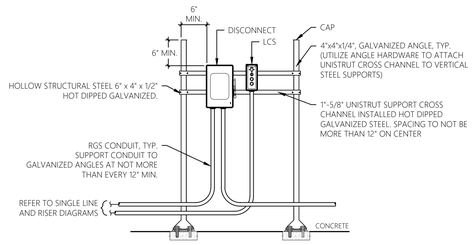

FRONT FACE

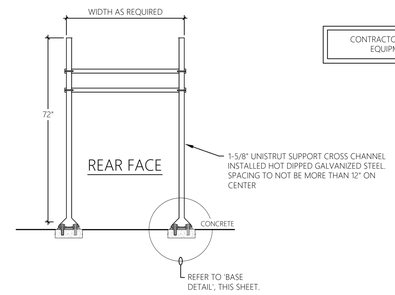

CONTRACTOR TO SIZE AND ARRANGE ELECTRICAL EQUIPMENT TO FIT MOUNTING STAND.

3 / E-036 ELECTRICAL MOUNTING STAND DETAIL
SCALE: NTS TYPICAL FOR DISCONNECT AND LCS SETUP

MHE ENGINEERING
33 Airport Center Drive, Suite 202
New Windsor, NY 12553
(845) 567-3100
111 Wheatfield Drive, Suite 1
Milford, PA 18337
(570) 296-2765

BID ADDENDUM

JADE STONE ENGINEERING

STATE OF NEW YORK · JEFFREY E. ROBINSON · 095896 · LICENSED PROFESSIONAL ENGINEER

HAZARDOUS MATERIAL NOTE:
THE SERVICES PROVIDED BY MHE, INCLUDING ALL WORK DEPICTED ON MHE PLANS, DO NOT INCLUDE SERVICES RELATED TO THE IDENTIFICATION, CONTROLS OR HANDLING OF HAZARDOUS MATERIALS, INCLUDING SUCH MATERIALS AS ASBESTOS AND LEAD PAINT. ALL TESTING, IDENTIFICATION, ABATEMENT, CONTROLS, AND HANDLING OF HAZARDOUS MATERIALS SHALL BE UNDERTAKEN BY A HAZARDOUS MATERIAL CONSULTANT AND CERTIFIED PROFESSIONALS. IF SUCH MATERIALS HAVE BEEN IDENTIFIED, CONTRACTOR WILL COMMUNICATE DIRECTLY WITH HAZARDOUS MATERIAL PROFESSIONAL FOR THE PERFORMANCE OF ANY WORK ON OR ADJACENT TO SAID MATERIALS. IF UNIDENTIFIED MATERIALS OF CONCERN ARE ENCOUNTERED WHILE UNDERTAKING THE WORK SHOWN HEREON, CONTRACTOR SHALL IMMEDIATELY NOTIFY ENGINEER AND OWNER, AND SHALL OBTAIN DIRECTION FROM THE HAZARDOUS MATERIAL CONSULTANT PRIOR TO THE CONTINUATION OF WORK INVOLVING SUSPECTED MATERIAL.

UDIG·NY SAFE DIGGING STARTS HERE
CALL 811

UNAUTHORIZED ADDITION OR ALTERATION OF THIS PLAN IS A VIOLATION OF SECTION 7209(2) OF THE NEW YORK STATE EDUCATION LAW.

ALL PRODUCTION & INTELLECTUAL PROPERTY RIGHT RESERVED ©

CAESARS LANE WWTP EXPANSION PROJECT: PHASE 2
145 CAESARS LN.
NEW WINDSOR, NY 12553
FOR TOWN OF NEW WINDSOR
555 UNION AVE.
NEW WINDSOR, NY 12553

ELECTRICAL DETAILS

REVISIONS

NO.	DESCRIPTION	DATE

ISSUED DATE:	06 JUNE, 2025
DESIGN BY:	RRM
DRAWN BY:	CDJ
CHECKED BY:	MGR
REVIEWED BY:	JER

SHEET NO.
E-036

PROJECT # 18-732 PHASE #

DUCT BANK SCHEDULE (1 OF 4)

DESIGNATION DB-XX	TYPE	ORIGIN	DESTINATION	CIRCUIT: CONDUCTORS/CONDUIT	CIRCUIT: ORIGIN	CIRCUIT: DESTINATION	REMARKS
DB-01	REINFORCED CONCRETE	PRIMARY METERING RISER POLE	PAD-MOUNTED TRANSFORMER	(4)#4/0, 4"C 15KV PRIMARY ALUMINUM FEEDER	PRIMARY METERING RISER POLE	PAD-MOUNTED TRANSFORMER	2
				4"C. SPARE	PRIMARY METERING RISER POLE	PAD-MOUNTED TRANSFORMER	
				4"C. SPARE	PRIMARY METERING RISER POLE	MBR BUILDING DATA RACK	
DB-02	REINFORCED CONCRETE	PAD-MOUNTED TRANSFORMER	MBR BUILDING	EIGHT (8) SETS OF [(4)#500, 4"C.]	PAD-MOUNTED TRANSFORMER	MAIN CIRCUIT BREAKER MCB	2
				4"C. SPARE	PAD-MOUNTED TRANSFORMER	ADJACENT TO MCB	
				4"C. SPARE	PRIMARY METERING RISER POLE	MBR BUILDING DATA RACK	
DB-03	REINFORCED CONCRETE	MBR BUILDING	EMERGENCY GENERATOR #1	4 SETS OF [(4)#500 & #4/0G, 4" C]	AUTOMATIC TRANSFER SWITCH ATS	EMERGENCY GENERATOR #1	2
				(12)#14 & (2)#18STP, 1"C.	AUTOMATIC TRANSFER SWITCH ATS	EMERGENCY GENERATOR #1	
				(3)#2 & #8G, 1-1/2"C.	PANEL LVP1	EMERGENCY GENERATOR #1 LOAD CENTER	
				BELDEN 9729, 1"C. (4)#14, 3/4"C.	REMOTE ANNUNCIATOR & DISPLAY	EMERGENCY GENERATOR #1	
				(4)#14, 3/4"C.	EMERGENCY STOP	EMERGENCY GENERATOR #1	
				4"C. SPARE	ADJACENT TO ATS	EMERGENCY GENERATOR #1	
DB-04	REINFORCED CONCRETE	MBR BUILDING	EMERGENCY GENERATOR #2	4 SETS OF [(4)#500 & #4/0G, 4" C]	AUTOMATIC TRANSFER SWITCH ATS	EMERGENCY GENERATOR #2	2
				(12)#14 & (2)#18STP, 1"C.	AUTOMATIC TRANSFER SWITCH ATS	EMERGENCY GENERATOR #2	
				(3)#2 & #8G, 1-1/2"C.	PANEL LVP1	EMERGENCY GENERATOR #2 LOAD CENTER	
				BELDEN 9729, 1"C. (4)#14, 3/4"C.	REMOTE ANNUNCIATOR & DISPLAY	EMERGENCY GENERATOR #2	
				(4)#14, 3/4"C.	EMERGENCY STOP	EMERGENCY GENERATOR #2	
				4"C. SPARE	ADJACENT TO ATS	EMERGENCY GENERATOR #2	
DB-05	REINFORCED CONCRETE	EMERGENCY GENERATOR #1	EMERGENCY GENERATOR #2	(12)#14 & (2)#18STP, 1"C.	EMERGENCY GENERATOR #1	EMERGENCY GENERATOR #2	2
				BELDEN 9729, 1"C.	EMERGENCY GENERATOR #1	EMERGENCY GENERATOR #2	
				4"C. SPARE	EMERGENCY GENERATOR #1	EMERGENCY GENERATOR #2	
DB-06	SAND FILL/ REINFORCED CONCRETE	MBR BUILDING	CONTROL BUILDING	8STRAND MULTIMODE (50 MICRON CORE / 125 MICRON CLADDING DIAMETER), FIBER OPTIC CABLE, 4"C	R I/O-1	MCP	1 2
				4" C. SPARE	ADJACENT TO R I/O-1	ADJACENT TO MCP	
				8STRAND MULTIMODE (50 MICRON CORE / 125 MICRON CLADDING DIAMETER), FIBER OPTIC CABLE, 4"C	DATA RACK	DATA RACK	
				(4)#4/0 & #4G, 4"C.	SWBD	HVP2	
				4" C. SPARE	ADJACENT TO SWBD	ADJACENT TO HVP2	
DB-07	SAND FILL/ REINFORCED CONCRETE	MBR BUILDING	HEADWORKS BUILDING	8STRAND MULTIMODE (50 MICRON CORE / 125 MICRON CLADDING DIAMETER), FIBER OPTIC CABLE, 4"C	R I/O-1	R I/O-3	1 2
				4" C. SPARE	ADJACENT TO R I/O-1	ADJACENT TO R I/O-3	
				8STRAND MULTIMODE (50 MICRON CORE / 125 MICRON CLADDING DIAMETER), FIBER OPTIC CABLE, 4"C	DATA RACK	DATA RACK	
				(4)#4/0 & #4G, 4"C.	SWBD	HVP3	
				4" C. SPARE	ADJACENT TO SWBD	ADJACENT TO HVP3	
DB-08	SAND FILL	HEADWORKS BUILDING	INFLUENT STRUCTURE/PARSHALL FLUME	(2)#18STP & (4)#14, 1"C.	R I/O-3	PARSHALL FLUME FLOW METER	2
				(2)#10 & #10G, 1"C.	LVP3	PARSHALL FLUME FLOW METER	
				2" C. SPARE	ADJACENT TO R I/O-3	ADJACENT TO PARSHALL FLUME	
DB-09	SAND FILL	HEADWORKS BUILDING	GRIT CHAMBER	(3)#10 & #10G, 1"C.	DISCONNECT SWITCH	GRIT PROPELLER DRIVE GRTPD-01	2 3
				(4)#14, 3/4"C.	DISCONNECT SWITCH	GRIT PROPELLER DRIVE GRTPD-01	
				(3)#10 & #10G, 1"C.	DISCONNECT SWITCH	GRIT PUMP GRTP-01	
				(4)#14, 3/4"C.	DISCONNECT SWITCH	GRIT PUMP GRTP-01	
				(4)#14, 3/4"C.	GRIT CONTROL PANEL GRT-CP-01	SOLENOID VALVE SOL-203	
				(24)#14, 1"C.	GRIT CONTROL PANEL GRT-CP-01	VACUUM PRIME CONTROL PANEL	
				(3)#10 & #10G, 1"C.	LVP3	VACUUM PRIME CONTROL PANEL	
				2" C. SPARE	ADJACENT TO GRT-CP-01	GRIT CHAMBER	
DB-10	SAND FILL/ REINFORCED CONCRETE	MBR BUILDING	PRIMARY SETTLING TANK NO. 1	(4)#10 & #10G, 1"C.	HVP1	PC-CP-1	1 2 3
				(4)#10 & #10G, 1"C.	HVP1	SP-CP-1	
				2" C. SPARE	ADJACENT TO HVP1	ADJACENT TO PC-CP-1	
				(12)#14 & (2)#18STP, 1"C.	R I/O-1	PC-CP-1	
				(12)#14 & (2)#18STP, 1"C.	R I/O-1	SP-CP-1	
				2" C. SPARE	ADJACENT TO R I/O-1	ADJACENT TO PC-CP-1	
				(2)#10 & #10G, 1"C.	LVP1	RECEPTACLES	
				(2)#10 & #10G, 1"C.	LVP1	LIGHTS	
DB-11 (CONTINUED ON RIGHT)	SAND FILL/ REINFORCED CONCRETE	MBR BUILDING	PRIMARY SETTLING TANK NO. 2	(4)#10 & #10G, 1"C.	HVP1	PC-CP-2	1 2 3
				(4)#10 & #10G, 1"C.	HVP1	SP-CP-2	
				2" C. SPARE	ADJACENT TO HVP1	ADJACENT TO PC-CP-2	
				(12)#14 & (2)#18STP, 1"C.	R I/O-1	PC-CP-2	
				(12)#14 & (2)#18STP, 1"C.	R I/O-1	SP-CP-2	

DUCT BANK SCHEDULE (2 OF 4)

DESIGNATION DB-XX	TYPE	ORIGIN	DESTINATION	CIRCUIT: CONDUCTORS/CONDUIT	CIRCUIT: ORIGIN	CIRCUIT: DESTINATION	REMARKS
DB-11 (CONTINUED)	SAND FILL/ REINFORCED CONCRETE	MBR BUILDING	PRIMARY SETTLING TANK NO. 2	2" C. SPARE	ADJACENT TO R I/O-1	ADJACENT TO PC-CP-2	1 2 3
				(2)#10 & #10G, 1"C.	LVP1	RECEPTACLES	
				(2)#10 & #10G, 1"C.	LVP1	LIGHTS	
DB-12	SAND FILL/ REINFORCED CONCRETE	MBR BUILDING	PRIMARY SETTLING TANK NO. 3	(4)#10 & #10G, 1"C.	HVP1	PC-CP-3	1 2 3
				(4)#10 & #10G, 1"C.	HVP1	SP-CP-3	
				2" C. SPARE	ADJACENT TO HVP1	ADJACENT TO PC-CP-3	
				(12)#14 & (2)#18STP, 1"C.	R I/O-1	PC-CP-3	
				(12)#14 & (2)#18STP, 1"C.	R I/O-1	SP-CP-3	
				2" C. SPARE	ADJACENT TO R I/O-1	ADJACENT TO PC-CP-3	
				(2)#10 & #10G, 1"C.	LVP1	RECEPTACLES	
				(2)#10 & #10G, 1"C.	LVP1	LIGHTS	
DB-13	SAND FILL/ REINFORCED CONCRETE	MBR BUILDING	PRIMARY SETTLING TANK NO. 4	(4)#10 & #10G, 1"C.	HVP1	PC-CP-4	1 2 3
				(4)#10 & #10G, 1"C.	HVP1	SP-CP-4	
				2" C. SPARE	ADJACENT TO HVP1	ADJACENT TO PC-CP-4	
				(12)#14 & (2)#18STP, 1"C.	R I/O-1	PC-CP-4	
				(12)#14 & (2)#18STP, 1"C.	R I/O-1	SP-CP-4	
				2" C. SPARE	ADJACENT TO R I/O-1	ADJACENT TO PC-CP-4	
				(2)#10 & #10G, 1"C.	LVP1	RECEPTACLES	
				(2)#10 & #10G, 1"C.	LVP1	LIGHTS	
DB-14	SAND FILL/ REINFORCED CONCRETE	MBR BUILDING	ELECTRICAL BACKBOARD	(3)#8 & #10G, 1"C.	PANEL LVP1	PRIMARY SLUDGE VALVE CONTROL PANEL	1 2 3
				(48)#14 & (8)#18STP, 2"C. CAT 6 CABLE, 1"C.	R I/O-1	PRIMARY SLUDGE VALVE CONTROL PANEL	
				(2)#10 & #10G, 1"C.	PANEL LVP1	SLUDGE CONTROL VALVE VAULT LIGHT	
				(2)#10 & #10G, 1"C.	PANEL LVP1	SLUDGE CONTROL VALVE VAULT SUMP PUMP	
				(2)#10 & #10G, 1"C.	PANEL LVP1	SLUDGE CONTROL VALVE VAULT EXHAUST FAN	
				(3)#10 & #10G, 1"C.	PANEL LVP1	SLUDGE CONTROL VALVE VAULT UNIT HEATER	
				(4)#14 & (2)#18STP, 1"C.	R I/O-1	SLUDGE CONTROL VALVE VAULT FLOOD DETECTION	
				(2)#10 & #10G, 1"C.	PANEL LVP1	SLUDGE VALVE PIT SUMP PUMP	
				(2)#10 & #10G, 1"C.	PANEL LVP1	SLUDGE VALVE PIT LIGHT	
				(4)#14 & (2)#18STP, 1"C.	R I/O-1	SLUDGE VALVE PIT FLOOD DETECTION	
				(4)#6 & #10G, 2"C.	PANEL HVP1	PRIMARY SLUDGE PUMP CONTROL PANEL	
				(12)#14 & (2)#18STP, 1"C. CAT 6 CABLE, 1"C.	R I/O-1	PRIMARY SLUDGE PUMP CONTROL PANEL	
				(2)#10 & #10G, 1"C.	PANEL LVP1	PRIMARY SLUDGE PIT LIGHT	
				(2)#10 & #10G, 1"C.	PANEL LVP1	PRIMARY SLUDGE PIT SUMP PUMP	
				(2)#10 & #10G, 1"C.	PANEL LVP1	PRIMARY SLUDGE PIT EXHAUST FAN	
				(2)#10 & #10G, 1"C.	PANEL LVP1	PRIMARY SLUDGE PIT SRV	
				(2)#10 & #10G, 1"C.	PANEL LVP1	PRIMARY SLUDGE PIT DEHUMIDIFIER	
				(3)#10 & #10G, 1"C.	PANEL HVP1	PRIMARY SLUDGE PIT UNIT HEATER	
				(4)#14 & (2)#18STP, 1"C.	R I/O-1	PRIMARY SLUDGE PIT FLOOD DETECTION	
				(2)#10 & #10G, 1"C.	PANEL LVP1	ELECTRICAL BACKBOARD LIGHT	
				(2)#10 & #10G, 1"C.	PANEL LVP1	ELECTRICAL BACKBOARD RECEPTACLE	
				(2)#10 & #10G, 1"C.	PANEL LVP1	LEVEL TRANSDUCER TRANSMITTER	
				2"C. SPARE	ADJACENT TO LVP1	ELECTRICAL BACKBOARD	
				2"C. SPARE	ADJACENT TO R I/O-1	ELECTRICAL BACKBOARD	
DB-15	SAND FILL/ REINFORCED CONCRETE	MBR BUILDING	GARAGE	8STRAND MULTIMODE (50 MICRON CORE / 125 MICRON CLADDING DIAMETER), FIBER OPTIC CABLE, 4"C	DATA RACK	DATA RACK	1 2
				(4)#4/0 & #4G, 4"C.	SWBD	HVP7	
				4" C. SPARE	ADJACENT TO SWBD	ADJACENT TO HVP7	
DB-16	SAND FILL/ REINFORCED CONCRETE	MBR BUILDING	DEWATERING BUILDING	8STRAND MULTIMODE (50 MICRON CORE / 125 MICRON CLADDING DIAMETER), FIBER OPTIC CABLE, 4"C	R I/O-1	R I/O-2	1 2
				4" C. SPARE	ADJACENT TO R I/O-1	ADJACENT TO R I/O-2	
				8STRAND MULTIMODE (50 MICRON CORE / 125 MICRON CLADDING DIAMETER), FIBER OPTIC CABLE, 4"C	DATA RACK	DATA RACK	
				TWO (2) SETS OF [(4)#4/0 & #2G, 4"C.]	SWBD	HVP4	
				4" C. SPARE	ADJACENT TO SWBD	ADJACENT TO HVP4	

MHE ENGINEERING
33 Airport Center Drive, Suite 202
New Windsor, NY 12553
(845) 567-3100
111 Wheatfield Drive, Suite 1
Milford, PA 18337
(570) 296-2765

BID ADDENDUM

JADE STONE ENGINEERING

STATE OF NEW YORK · JEFFREY E. ROBINSON · 095896 · LICENSED PROFESSIONAL ENGINEER

HAZARDOUS MATERIAL NOTE:
THE SERVICES PROVIDED BY MHE, INCLUDING ALL WORK DEPICTED ON MHE PLANS, DO NOT INCLUDE SERVICES RELATED TO THE IDENTIFICATION, CONTROLS OR HANDLING OF HAZARDOUS MATERIALS, INCLUDING SUCH MATERIALS AS ASBESTOS AND LEAD PAINT. ALL TESTING, IDENTIFICATION, ABATEMENT, CONTROLS, AND HANDLING OF HAZARDOUS MATERIALS SHALL BE UNDERTAKEN BY A HAZARDOUS MATERIAL CONSULTANT AND CERTIFIED PROFESSIONALS. IF SUCH MATERIALS HAVE BEEN IDENTIFIED, CONTRACTOR WILL COMMUNICATE DIRECTLY WITH HAZARDOUS MATERIAL PROFESSIONAL FOR THE PERFORMANCE OF ANY WORK ON OR ADJACENT TO SAID MATERIALS. IF UNIDENTIFIED MATERIALS OF CONCERN ARE ENCOUNTERED WHILE UNDERTAKING THE WORK SHOWN HEREON, CONTRACTOR SHALL IMMEDIATELY NOTIFY ENGINEER AND OWNER, AND SHALL OBTAIN DIRECTION FROM THE HAZARDOUS MATERIAL CONSULTANT PRIOR TO THE CONTINUATION OF WORK INVOLVING SUSPECTED MATERIAL.

UDIG·NY SAFE DIGGING STARTS HERE
CALL 811

UNAUTHORIZED ADDITION OR ALTERATION OF THIS PLAN IS A VIOLATION OF SECTION 7209(2) OF THE NEW YORK STATE EDUCATION LAW.

ALL PRODUCTION & INTELLECTUAL PROPERTY RIGHT RESERVED ©

CAESARS LANE WWTP EXPANSION PROJECT: PHASE 2
145 CAESARS LN.
NEW WINDSOR, NY 12553
FOR TOWN OF NEW WINDSOR
555 UNION AVE.
NEW WINDSOR, NY 12553

ELECTRICAL SCHEDULES

REVISIONS

NO.	DESCRIPTION	DATE

ISSUED DATE:	06 JUNE, 2025
DESIGN BY:	RRM
DRAWN BY:	CDJ
CHECKED BY:	MGR
REVIEWED BY:	JER

SHEET NO.
E-040

PROJECT # 18-732 PHASE #

DUCT BANK SCHEDULE (3 OF 4)

DESIGNATION DB-XX	TYPE	ORIGIN	DESTINATION	CIRCUIT CONDUCTORS/CONDUIT	CIRCUIT ORIGIN	CIRCUIT DESTINATION	REMARKS
DB-17	SAND FILL/ REINFORCED CONCRETE	MBR BUILDING	DISINFECTION BUILDING	8STRAND MULTIMODE (50 MICRON CORE / 125 MICRON CLADDING DIAMETER), FIBER OPTIC CABLE, 4"C.	R I/O-1	DBSP	1 2
				4" C. SPARE	ADJACENT TO R I/O-1	ADJACENT TO DBSP	
				TWO (2) SETS OF [(4)#4/0 & #2G, 4"C.]	SWBD	HVP8	
				4" C. SPARE	ADJACENT TO SWBD	ADJACENT TO HVP8	
DB-18	SAND FILL	DISINFECTION BUILDING	DISINFECTION TANK	(2)#10 & #10G, 1"C.	PANEL PP1	BLOWER PLATFORM LIGHTS	2 3
				(2)#10 & #10G, 1"C.	PANEL PP1	BLOWER PLATFORM RECEPTACLES	
				(2)#10 & #10G, 1"C.	PANEL PP1	BACK PULSE PUMP STATION RECEPTACLES	
				(2)#10 & #10G, 1"C.	PANEL PP1	DISSOLVED OXYGEN DOA-01	
				(2)#10 & #10G, 1"C.	PANEL PP1	DISSOLVED OXYGEN DOA-02	
				(2)#10 & #10G, 1"C.	PANEL PP1	ULTRASONIC TRANSMITTER UTT-02	
				(2)#10 & #10G, 1"C.	PANEL PP1	ULTRASONIC TRANSMITTER UTT-03	
				(2)#10 & #10G, 1"C.	PANEL PP1	ULTRASONIC TRANSMITTER UTT-04	
				(2)#10 & #10G, 1"C.	PANEL PP1	BACK PULSE TANK LEVEL TRANSDUCER	
				CAT 6 CABLE, 1"C. (4)#14, 1"C. & (4)#18STP, 1"C.	DISINFECTION BUILDING SCADA PANEL	DISSOLVED OXYGEN DOA-01	
				CAT 6 CABLE, 1"C. (4)#14, 1"C. & (4)#18STP, 1"C.	DISINFECTION BUILDING SCADA PANEL	DISSOLVED OXYGEN DOA-02	
				CAT 6 CABLE, 1"C. (4)#14, 1"C. & (4)#18STP, 1"C.	DISINFECTION BUILDING SCADA PANEL	ULTRASONIC TRANSMITTER UTT-02	
				CAT 6 CABLE, 1"C. (4)#14, 1"C. & (4)#18STP, 1"C.	DISINFECTION BUILDING SCADA PANEL	ULTRASONIC TRANSMITTER UTT-03	
				CAT 6 CABLE, 1"C. (4)#14, 1"C. & (4)#18STP, 1"C.	DISINFECTION BUILDING SCADA PANEL	ULTRASONIC TRANSMITTER UTT-04	
				CAT 6 CABLE, 1"C. (4)#14, 1"C. & (4)#18STP, 1"C.	DISINFECTION BUILDING SCADA PANEL	BACK PULSE TANK LEVEL TRANSDUCER	
				CAT 6 CABLE, 1"C. (4)#14, 1"C. & (4)#18STP, 1"C.	DISINFECTION BUILDING SCADA PANEL	PLANT WATER CONTROL PANEL PWCP-600	
				(3)#6 & #10G, 2"C.	VFD-BL1	BLOWER NO. 1	
				(4)#14, 3/4"C.	VFD-BL1	BLOWER NO. 1 DISCONNECT	
				(12)#14 & (4)#18STP, 1"C.	VFD-BL1	BLOWER NO. 1	
				(3)#6 & #10G, 2"C.	VFD-BL2	BLOWER NO. 2	
				(4)#14, 3/4"C.	VFD-BL2	BLOWER NO. 2 DISCONNECT	
				(12)#14 & (4)#18STP, 1"C.	VFD-BL2	BLOWER NO. 2	
				(3)#1/0 & #6G, 3"C.	VFD-BP1	BACK PULSE PUMP NO. 1	
				(4)#14, 3/4"C.	VFD-BP1	BACK PULSE PUMP NO. 1 DISCONNECT	
				(12)#14 & (4)#18STP, 1"C.	VFD-BP1	BACK PULSE PUMP NO. 1	
				(12)#14 & (2)#18STP, 1"C.	VFD-BP1	BACK PULSE PUMP NO. 1 LOCAL CONTROL STATION	
				(4)#14, 3/4"C.	VFD-BP1	BACK PULSE PUMP NO. 1 PRESSURE SWITCH	
				(3)#1/0 & #6G, 3"C.	VFD-BP2	BACK PULSE PUMP NO. 2	
				(4)#14, 3/4"C.	VFD-BP2	BACK PULSE PUMP NO. 2 DISCONNECT	
				(12)#14 & (4)#18STP, 1"C.	VFD-BP2	BACK PULSE PUMP NO. 2	
				(12)#14 & (2)#18STP, 1"C.	VFD-BP2	BACK PULSE PUMP NO. 2 LOCAL CONTROL STATION	
				(4)#14, 3/4"C.	VFD-BP2	BACK PULSE PUMP NO. 2 PRESSURE SWITCH	
				(4)#4/0 & #4G, 4"C.	PANEL HVP8	PLANT WATER CONTROL PANEL PWCP-600	
				4"C. SPARE	ADJACENT TO HVP8	DISINFECTION TANK	
				4"C. SPARE	ADJACENT TO DBSP	DISINFECTION TANK	
DB-19	SAND FILL/ REINFORCED CONCRETE	MBR BUILDING	SITE LIGHTING	(2)#8 & #10G, 1"C.	PANEL HVP1	POLE-MOUNTED SITE LIGHTS	1
DB-20 (CONTINUED ON RIGHT)	SAND FILL/ REINFORCED CONCRETE	ELECTRICAL BACKBOARD	SLUDGE CONTROL VALVE VAULT	(2)#10 & #10G, 1"C.	PRIMARY SLUDGE VALVE CONTROL PANEL	PRIMARY SLUDGE VALVE NO. 1	1 2 3
				(12)#14 & (2)#18STP, 1"C. CAT 6 CABLE, 1"C.	PRIMARY SLUDGE VALVE CONTROL PANEL	PRIMARY SLUDGE VALVE NO. 1	
				(2)#10 & #10G, 1"C.	PRIMARY SLUDGE VALVE CONTROL PANEL	PRIMARY SLUDGE VALVE NO. 2	
				(12)#14 & (2)#18STP, 1"C. CAT 6 CABLE, 1"C.	PRIMARY SLUDGE VALVE CONTROL PANEL	PRIMARY SLUDGE VALVE NO. 2	
				(2)#10 & #10G, 1"C.	PRIMARY SLUDGE VALVE CONTROL PANEL	PRIMARY SLUDGE VALVE NO. 3	
				(12)#14 & (2)#18STP, 1"C. CAT 6 CABLE, 1"C.	PRIMARY SLUDGE VALVE CONTROL PANEL	PRIMARY SLUDGE VALVE NO. 3	
				(2)#10 & #10G, 1"C.	PANEL LVP1	SLUDGE CONTROL VALVE VAULT LIGHT	
				(2)#10 & #10G, 1"C.	PANEL LVP1	SLUDGE CONTROL VALVE VAULT SUMP PUMP	
				(2)#10 & #10G, 1"C.	PANEL LVP1	SLUDGE CONTROL VALVE VAULT EXHAUST FAN	
				(3)#10 & #10G, 1"C.	PANEL LVP1	SLUDGE CONTROL VALVE VAULT UNIT HEATER	
				(4)#14 & (2)#18STP, 1"C.	R I/O-1	SLUDGE CONTROL VALVE VAULT FLOOD DETECTION	
				TWO (2) 2"C. SPARE	ELECTRICAL BACKBOARD	SLUDGE CONTROL VALVE VAULT	

DUCT BANK SCHEDULE (4 OF 4)

DESIGNATION DB-XX	TYPE	ORIGIN	DESTINATION	CIRCUIT CONDUCTORS/CONDUIT	CIRCUIT ORIGIN	CIRCUIT DESTINATION	REMARKS
DB-21	SAND FILL/ REINFORCED CONCRETE	MBR BUILDING	ATAD BUILDING	8STRAND MULTIMODE (50 MICRON CORE / 125 MICRON CLADDING DIAMETER), FIBER OPTIC CABLE, 4"C	R I/O-1	R I/O-4	1 2
				4" C. SPARE	ADJACENT TO R I/O-1	ADJACENT TO R I/O-4	
				8STRAND MULTIMODE (50 MICRON CORE / 125 MICRON CLADDING DIAMETER), FIBER OPTIC CABLE, 4"C	DATA RACK	DATA RACK	
				FOUR (4) SETS OF [(4)#500 & #4/0G, 4"C.]	SWBD	MCC2	
				4" C. SPARE	ADJACENT TO SWBD	ADJACENT TO MCC2	
DB-22	SAND FILL/ REINFORCED CONCRETE	CONTROL BUILDING	MOTORIZED ENTRANCE GATE	(3)#6 & #10G, 1"C.	PANEL LVP2	MOTORIZED ENTRANCE GATE	1 2
				CAT 6 CABLE, 1"C.	DATA RACK	MOTORIZED ENTRANCE GATE	
				2"C. SPARE	ADJACENT TO DATA RACK	MOTORIZED ENTRANCE GATE	
DB-23	REINFORCED CONCRETE	ATAD BUILDING	FILTRATE PUMP WET WELL	(3)#10 & #10G, 1"C.	FILTRATE PUMP CONTROL PANEL	FILTRATE PUMP FP-400	2 3
				(6)#14, 3/4"C.	FILTRATE PUMP CONTROL PANEL	FILTRATE PUMP FP-400	
				(3)#10 & #10G, 1"C.	FILTRATE PUMP CONTROL PANEL	FILTRATE PUMP FP-401	
				(6)#14, 3/4"C.	FILTRATE PUMP CONTROL PANEL	FILTRATE PUMP FP-401	
				(4)#14, 3/4"C.	FILTRATE PUMP CONTROL PANEL	FLOAT FL-400	
				(4)#14, 3/4"C.	FILTRATE PUMP CONTROL PANEL	FLOAT FL-401	
				(4)#14, 3/4"C.	FILTRATE PUMP CONTROL PANEL	FLOAT FL-402	
				2"C. SPARE	ADJACENT TO CONTROL PANEL	FILTRATE PUMP WET WELL	
DB-24	SAND FILL/ REINFORCED CONCRETE	ELECTRICAL BACKBOARD	SLUDGE VALVE PIT	(2)#10 & #10G, 1"C.	PRIMARY SLUDGE VALVE CONTROL PANEL	PRIMARY SLUDGE VALVE NO. 4	1 2 3
				(12)#14 & (2)#18STP, 1"C. CAT 6 CABLE, 1"C.	PRIMARY SLUDGE VALVE CONTROL PANEL	PRIMARY SLUDGE VALVE NO. 4	
				(2)#10 & #10G, 1"C.	PANEL LVP1	SLUDGE VALVE PIT SUMP PUMP	
				(2)#10 & #10G, 1"C.	PANEL LVP1	SLUDGE VALVE PIT LIGHT	
				(4)#14 & (2)#18STP, 1"C.	R I/O-1	SLUDGE VALVE PIT FLOOD DETECTION	
				TWO (2) 2"C. SPARE	ELECTRICAL BACKBOARD	SLUDGE VALVE PIT	
DB-25	SAND FILL	ELECTRICAL BACKBOARD	PRIMARY SLUDGE PUMP PIT	(3)#10 & #10G, 1"C.	PRIMARY SLUDGE PUMP CONTROL PANEL	PRIMARY SLUDGE PUMP NO. 1	2 3
				(6)#14, 1"C.	PRIMARY SLUDGE PUMP CONTROL PANEL	PRIMARY SLUDGE PUMP NO. 1	
				(3)#10 & #10G, 1"C.	PRIMARY SLUDGE PUMP CONTROL PANEL	PRIMARY SLUDGE PUMP NO. 2	
				(6)#14, 1"C.	PRIMARY SLUDGE PUMP CONTROL PANEL	PRIMARY SLUDGE PUMP NO. 2	
				(4)#14, 3/4"C.	PRIMARY SLUDGE PUMP CONTROL PANEL	PRESSURE SWITCH PS-SP-01	
				(4)#14, 3/4"C.	PRIMARY SLUDGE PUMP CONTROL PANEL	PRESSURE SWITCH PS-SP-02	
				(4)#14, 3/4"C.	PRIMARY SLUDGE PUMP CONTROL PANEL	BACKUP FLOAT FLS-300	
				(4)#14, 3/4"C.	PRIMARY SLUDGE PUMP CONTROL PANEL	BACKUP FLOAT FLS-301	
				(4)#14, 3/4"C.	PRIMARY SLUDGE PUMP CONTROL PANEL	BACKUP FLOAT FLS-302	
				(4)#14, 3/4"C.	PRIMARY SLUDGE PUMP CONTROL PANEL	BACKUP FLOAT FLS-303	
				(2)#18STP, 3/4"C.	PRIMARY SLUDGE PUMP CONTROL PANEL	LEVEL TRANSDUCER LT-300	
				(2)#10 & #10G, 1"C.	PANEL LVP1	PRIMARY SLUDGE PIT LIGHT	
				(2)#10 & #10G, 1"C.	PANEL LVP1	PRIMARY SLUDGE PIT SUMP PUMP	
				(2)#10 & #10G, 1"C.	PANEL LVP1	PRIMARY SLUDGE PIT EXHAUST FAN	
				(2)#10 & #10G, 1"C.	PANEL LVP1	PRIMARY SLUDGE PIT SRV	
				(2)#10 & #10G, 1"C.	PANEL LVP1	PRIMARY SLUDGE PIT DEHUMIDIFIER	
				(3)#10 & #10G, 1"C.	PANEL HVP1	PRIMARY SLUDGE PIT UNIT HEATER	
				(4)#14 & (2)#18STP, 1"C.	R I/O-1	PRIMARY SLUDGE PIT FLOOD DETECTION	
				TWO (2) 2"C. SPARE	ELECTRICAL BACKBOARD	PRIMARY SLUDGE PIT	
DB-26	SAND FILL / REINFORCED CONCRETE	ATAD BUILDING	DISINFECTION TANK	(3)#6 & #10G, 2"C.	MCC2	COOLING WATER PUMP NO. 1	1 2 3
				(8)#14, 1"C.	MCC2	COOLING WATER PUMP NO. 1	
				(4)#14, 3/4"C.	MCC2	FLOAT SWITCH FLS-601	
				(3)#6 & #10G, 2"C.	MCC2	COOLING WATER PUMP NO. 1	
				(8)#14, 1"C.	MCC2	COOLING WATER PUMP NO. 1	
				(4)#14, 3/4"C.	MCC2	FLOAT SWITCH FLS-602	
				TWO (2) 2"C. SPARE	ADJACENT TO MCC2	DISINFECTION TANK	

GENERAL SCHEDULE NOTES:

1. VERIFY CIRCUIT REQUIREMENTS WITH APPLICABLE EQUIPMENT MANUFACTURERS. PROVIDE CONDUCTORS AND CONDUIT AS REQUIRED.
2. COORDINATE DUCT BANK LOCATIONS AND INSTALLATIONS WITH EXISTING AND PROPOSED STRUCTURES, EQUIPMENT, PIPING SYSTEMS, AND WITH OWNER / ENGINEER.
3. REFER TO THE TYPICAL DUCT BANK DETAILS FOR ADDITIONAL REQUIREMENTS.
4. REFER TO THE ELECTRICAL SITE PLANS FOR GENERAL LOCATIONS, ROUTING AND ADDITIONAL INFORMATION.
5. REFER TO THE ELECTRICAL SINGLE LINE DIAGRAMS AND RISER DIAGRAMS FOR ADDITIONAL INFORMATION/REQUIREMENTS.
6. CONTRACTOR RESPONSIBLE FOR ALL ASPHALT REPAIR (IF ANY). COORDINATE FINAL REQUIREMENTS WITH THE OWNER AND ENGINEER.
7. CONTRACTOR TO CLOSELY COORDINATE FINAL DUCT BANK REQUIREMENTS WITH OWNER / ENGINEER AND SHARE A COMMON TRENCH WHERE FEASIBLE/PRACTICAL. WHERE A COMMON TRENCH BETWEEN UTILITIES IS USED CONTRACTOR TO MAINTAIN NESC SEPARATION BETWEEN UTILITIES AT ALL TIMES.
8. REFER TO ELECTRICAL SITE PLAN FOR PROPOSED HAND HOLE LOCATIONS (IF ANY). WHERE HAND HOLES ARE REQUIRED, LOCATE IN GRASSY AREAS NOT SUBJECT TO VEHICLE LOADING. REFER TO ELECTRICAL SINGLE LINE DIAGRAMS, RISER DIAGRAMS, SPECIFICATIONS, & DETAILS FOR ADDITIONAL INFORMATION. COORDINATE FINAL REQUIREMENTS WITH OVERALL SITE PLANS AND WITH OWNER / ENGINEER.
9. DUCT BANK SCHEDULES ARE NOT INTENDED TO INDICATE ALL REQUIRED UNDERGROUND CIRCUITRY, BUT RATHER A GENERAL IDEA/MAGNITUDE OF OVERALL DUCT BANK SIZE. REFER TO ELECTRICAL SINGLE LINE DIAGRAMS, RISER DIAGRAMS, DETAILS, AND FLOOR PLANS FOR ADDITIONAL INFORMATION/REQUIREMENTS.

REMARKS:

1. PROVIDE AS SAND FILLED DUCT BANK WHERE BENEATH GRASSY AREAS, OR AREAS NOT SUBJECT TO VEHICLE LOADING. PROVIDE AS REINFORCED CONCRETE DUCT BANK WHERE BENEATH PAVED AREAS, OR AREAS SUBJECT TO VEHICLE LOADING. COORDINATE FINAL REQUIREMENTS WITH THE OVERALL SITE PLANS AND WITH OWNER / ENGINEER
2. FINAL SPARE CONDUIT STUB-UP LOCATION TO BE COORDINATED WITH THE OWNER AND ENGINEER. PROVIDE PULL STRING AND CAP BOTH ENDS. CONTRACTOR TO PROVIDE LABEL FOR ALL SPARE CONDUITS INDICATING CONDUIT DESTINATION. REFER TO SPECIFICATIONS FOR ADDITIONAL INFORMATION/REQUIREMENTS.
3. CONTRACTOR MAY GROUP POWER CIRCUITS INTO LARGER CONDUIT AND GROUP CONTROL CIRCUITS INTO SEPARATE LARGER CONDUIT. GROUPING OF CIRCUITS INTO LARGER CONDUITS MUST COMPLY WITH NEC FILL AND DERATING REQUIREMENTS. REFER TO ELECTRICAL RISER DIAGRAMS FOR ADDITIONAL INFORMATION/REQUIREMENTS.

MHE ENGINEERING

33 Airport Center Drive, Suite 202
New Windsor, NY 12553
(845) 567-3100

111 Wheatfield Drive, Suite 1
Milford, PA 18337
(570) 296-2765

BID ADDENDUM

JADE STONE ENGINEERING

STATE OF NEW YORK · JEFFREY E. ROBINSON · 095896 · LICENSED PROFESSIONAL ENGINEER

HAZARDOUS MATERIAL NOTE:
THE SERVICES PROVIDED BY MHE, INCLUDING ALL WORK DEPICTED ON MHE PLANS, DO NOT INCLUDE SERVICES RELATED TO THE IDENTIFICATION, CONTROLS OR HANDLING OF HAZARDOUS MATERIALS, INCLUDING SUCH MATERIALS AS ASBESTOS AND LEAD PAINT. ALL TESTING, IDENTIFICATION, ABATEMENT, CONTROLS, AND HANDLING OF HAZARDOUS MATERIALS SHALL BE UNDERTAKEN BY A HAZARDOUS MATERIAL CONSULTANT AND CERTIFIED PROFESSIONALS. IF SUCH MATERIALS HAVE BEEN IDENTIFIED, CONTRACTOR WILL COMMUNICATE DIRECTLY WITH HAZARDOUS MATERIAL PROFESSIONAL FOR THE PERFORMANCE OF ANY WORK ON OR ADJACENT TO SAID MATERIALS. IF UNIDENTIFIED MATERIALS OF CONCERN ARE ENCOUNTERED WHILE UNDERTAKING THE WORK SHOWN HEREON, CONTRACTOR SHALL IMMEDIATELY NOTIFY ENGINEER AND OWNER, AND SHALL OBTAIN DIRECTION FROM THE HAZARDOUS MATERIAL CONSULTANT PRIOR TO THE CONTINUATION OF WORK INVOLVING SUSPECTED MATERIAL.

UDIG·NY SAFE DIGGING STARTS HERE
CALL 811

UNAUTHORIZED ADDITION OR ALTERATION OF THIS PLAN IS A VIOLATION OF SECTION 7209(2) OF THE NEW YORK STATE EDUCATION LAW.

ALL PRODUCTION & INTELLECTUAL PROPERTY RIGHT RESERVED ©

CAESARS LANE WWTP EXPANSION PROJECT: PHASE 2
145 CAESARS LN.
NEW WINDSOR, NY 12553
FOR TOWN OF NEW WINDSOR
555 UNION AVE.
NEW WINDSOR, NY 12553

ELECTRICAL SCHEDULES

REVISIONS

NO.	DESCRIPTION	DATE

ISSUED DATE:	06 JUNE, 2025
DESIGN BY:	RRM
DRAWN BY:	CDJ
CHECKED BY:	MGR
REVIEWED BY:	JER

SHEET NO.
E-041

PROJECT # 18-732 PHASE #

LUMINAIRE SCHEDULE

TYPE	DESCRIPTION	FIXTURE BASIS OF DESIGN	LENS/DIFFUSER/ FINISH	VOLTAGE	LAMPS	BALLAST BASIS OF DESIGN	MOUNTING	DIMMING	REMARKS
L1	2' X 2' TROFFER LED MODULE	COOPER - METALUX 22EN-LD2-19-UNV-L840-CD1-U	ACRYLIC	120V	LED 1,900 LUMENS / 4000K 16.5W	0-10V DIMMING DRIVER	RECESSED	YES	
L1E	2' X 2' TROFFER LED MODULE WITH EMERGENCY	COOPER - METALUX 22EN-LD2-19-UNV-EL7W-L840-CD1-U	ACRYLIC	120V	LED 1,900 LUMENS / 4000K 16.5W	0-10V DIMMING DRIVER	RECESSED	YES	① ②
L2	STAINLESS STEEL LED LIGHTING (1' x 4')	RIG-A-LITE MHLS11-L-C-2-U-MB-316	STAINLESS STEEL	120V	LED 11252 LUMENS / 4000K 77W	0-10V DIMMING DRIVER	SURFACE	NO	④ ⑮
L2E	STAINLESS STEEL LED LIGHTING W/EMERGENCY (1' x 4')	RIG-A-LITE MHLS11-L-C-2-U-MB-EM-316	STAINLESS STEEL	120V	LED 11,252 LUMENS / 4000K 77W	0-10V DIMMING DRIVER	SURFACE	NO	① ② ④ ⑮
L3	EXPLOSION PROOF LINEAR LED LIGHTING (1' x 4')	RIG-A-LITE XML-07-L-C-4-U-MB	TEMPERED GLASS	120V	LED 7,291 LUMENS / 4000K 54W	LED DRIVER	SURFACE	NO	④ ⑤
L3E	EXPLOSION PROOF LINEAR LED LIGHTING W/EM (1' x 4')	RIG-A-LITE XML-07-L-C-4-U-MB-EM	TEMPERED GLASS	120V	LED 7,291 LUMENS / 4000K 54W	LED DRIVER	SURFACE	NO	① ② ④ ⑤
L4	4' INDUSTRIAL LED LAMP (1' x 4')	COOPER - METALUX 4VT2-LD5-8-DR-UNV-L840-CD1-WL-U	TEMPERED GLASS	120V	LED 8,000 LUMENS / 4000K 58W	0-10V DIMMING DRIVER	SURFACE	NO	
L4E	4' INDUSTRIAL LED LAMP W/ EM (1' x 4')	COOPER - METALUX 4VT2-LD5-8-DR-UNV-VT-REM-EL-L840-CD1-WL-U	TEMPERED GLASS	120V	LED 8,000 LUMENS / 4000K 58W	0-10V DIMMING DRIVER	SURFACE	NO	① ②
L5	2' INDUSTRIAL LED LAMP (1' x 2')	COOPER - METALUX 2VT2-LD5-3-DR-UNV-L840-CD1-WL-U	TEMPERED GLASS	120V	LED 3,000 LUMENS / 4000K 22W	0-10V DIMMING DRIVER	SURFACE	NO	
L5E	2' INDUSTRIAL LED LAMP W/ EM (1' x 2')	COOPER - METALUX 2VT2-LD5-3-DR-UNV-VT-REM-EL-L840-CD1-WL-U	TEMPERED GLASS	120V	LED 3,000 LUMENS / 4000K 22W	0-10V DIMMING DRIVER	SURFACE	NO	① ② ④ ⑤
L6	4' INDUSTRIAL LED LAMP (1' x 4')	COOPER - METALUX 4VT2-LD5-6-DR-UNV-L840-CD1-WL-U	TEMPERED GLASS	120V	LED 6,000 LUMENS / 4000K 51W	0-10V DIMMING DRIVER	SURFACE	NO	
L6E	4' INDUSTRIAL LED LAMP W/ EM (1' x 4')	COOPER - METALUX 4VT2-LD5-6-DR-UNV-VT-REM-EL-L840-CD1-WL-U	TEMPERED GLASS	120V	LED 6,000 LUMENS / 4000K 51W	0-10V DIMMING DRIVER	SURFACE	NO	① ②
L7	LED HIGH BAY (1' x 4')	COOPER - METALUX 4ILED-LD5-11-W-UNV-L840-CD1-U-AYC-CHAIN/SET/U	WIDE BEAM	120V	LED 11,000 LUMENS / 4000K 79W	0-10V DIMMING DRIVER	CHAIN HANG	NO	① ⑰
L7E	LED HIGH BAY (1' x 4')	COOPER - METALUX 4ILED-LD5-11-W-UNV-L840-EL7W-CD1-U-AYC-CHAIN/SET/U	WIDE BEAM	120V	LED 11,000 LUMENS / 4000K 79W	0-10V DIMMING DRIVER	CHAIN HANG	NO	① ② ⑰
L8	STAINLESS STEEL LED LIGHTING (1' x 2')	RIG-A-LITE MHLS04-L-C-2-U-MB-316	STAINLESS STEEL	120V	LED 3,620 LUMENS / 4000K 27W	0-10V DIMMING DRIVER	SURFACE	NO	④ ⑮
L8E	STAINLESS STEEL LED LIGHTING W/EMERGENCY (1' x 2')	RIG-A-LITE MHLS04-L-C-2-U-MB-EM-316	STAINLESS STEEL	120V	LED 3,620 LUMENS / 4000K 27W	0-10V DIMMING DRIVER	SURFACE	NO	① ② ④ ⑮
L9	STAINLESS STEEL LED LIGHTING (1' x 2')	RIG-A-LITE MHLS05-L-C-2-U-MB-316	STAINLESS STEEL	120V	LED 4,833 LUMENS / 4000K 37W	0-10V DIMMING DRIVER	SURFACE	NO	④ ⑮
L9E	STAINLESS STEEL LED LIGHTING W/EMERGENCY (1' x 2')	RIG-A-LITE MHLS05-L-C-2-U-MB-EM-316	STAINLESS STEEL	120V	LED 4,833 LUMENS / 4000K 37W	0-10V DIMMING DRIVER	SURFACE	NO	① ② ④ ⑮
L10	6" LED MEDIUM BEAM DOWN LIGHT	COOPER (PORTFOLIO) LIGHT: LD6C-10IC-90-40-D010-B26-M-1-LI GASKET: LGSKT6IP66	SPECULAR CLEAR	120V	LED 1,000 LUMENS / 4000K 11W	0-10V DIMMING DRIVER	RECESSED	NO	⑱ ⑲ ⑳
L10E	6" LED MEDIUM BEAM DOWN LIGHT W/EMERGENCY	COOPER (PORTFOLIO) LIGHT: LD6C-10IC-90-40-D010-B26-M-1-LI-IEM7 GASKET: LGSKT6IP66	SPECULAR CLEAR	120V	LED 1,000 LUMENS / 4000K 11W	0-10V DIMMING DRIVER	RECESSED	NO	① ② ⑱ ⑲ ⑳
TL1	TELESCOPING LIGHT POLE	EATON CROUSE-HINDS POLE: V65H-S, BRACKET: MHK-RT S LIGHT FIXTURE: VMVL-17-N-J-UNV1	STAINLESS STEEL	120V	LED 17,800 LUMENS / 4000K 135W	0-10V DIMMING DRIVER	TELESCOPING POLE	NO	㉑
S1	AREA/SITE LUMINAIRE	COOPER - MCGRAW-EDISON GALN-SA3B-740-U-T4W-BK-WLS4BK	BLACK	277V	LED 17,000 LUMENS / 4000K 121W	LED DRIVER	POLE	NO	⑨ ⑩ ⑪ ⑫ ⑬ ⑭ ⑯ ㉒
S2	AREA/SITE LUMINAIRE	COOPER - MCGRAW-EDISON GALN-SA3B-740-U-5WQ-BK-WLS4BK	BLACK	277V	LED 17,000 LUMENS / 4000K 121W	LED DRIVER	POLE	NO	⑨ ⑩ ⑪ ⑫ ⑬ ⑭ ⑯ ㉒
WP1	EXTERIOR WALL MOUNT LUMINAIRE	COOPER (MCGRAW-EDISON) IST-SA1B-740-U-SL4-BZ	BRONZE	120V	LED 3,342 LUMENS / 4000K 25.4W	LED DRIVER	WALL	NO	⑦ ⑧ ⑨ ⑭
WP1E	EXTERIOR WALL MOUNT LUMINAIRE W/EMERGENCY	COOPER (MCGRAW-EDISON) IST-SA1B-740-U-SL4-CBP-BZ	BRONZE	120V	LED 3,342 LUMENS / 4000K 25.4W	LED DRIVER	WALL	NO	① ⑥ ⑦ ⑧ ⑨ ⑭
A (exit sign symbol)	ARCHITECTURAL LED EXIT SIGN	COOPER (EVENLITE) SOV-EM-R-1C-BA	BRUSHED ALUMINUM W/RED LETTERING	120V	LED 2.5W	-	CEILING OR WALL	-	① ② ③
I (exit sign symbol)	INDUSTRIAL LED EXIT SIGN	COOPER (SURE-LITES) UX7-1-BK-SD	ALUMINUM	120V	LED 1.5W	-	CEILING OR WALL	-	① ② ③
XP (exit sign symbol)	EXPLOSION PROOF LED EXIT SIGN	COOPER (RIG-A-LITE) XPEX-1-R-DT-WP-EM-SD	A356T6 ALUMINUM BODY W/ACRYLIC SIGN	120V	LED 2.5W	-	WALL	-	① ② ③ ⑤

GENERAL SCHEDULE NOTES:
1. MODELS ARE GIVEN FOR QUALITY ONLY, SUBSTITUTE LIGHT FIXTURES SHALL BE OF APPROVED EQUAL OR GREATER QUALITY.
2. ALL FIXTURES (WHERE APPLICABLE) SHALL BE POST FABRICATION PAINTED, BAKED ACRYLIC ENAMEL.
3. PROVIDE ALL NECESSARY MOUNTING HARDWARE, BRACKETS, ACCESSORIES, ETC... FOR INSTALLATION TYPE AS INDICATED.
4. ALL FIXTURES TO BE PROVIDED WITH LAMPS INSTALLED.
5. REFER TO ELECTRICAL PLANS FOR QUANTITIES AND GENERAL LOCATIONS.
6. REFER TO ELECTRICAL PLANS AND DETAILS FOR LIGHTING CONTROL AND ADDITIONAL INFORMATION/REQUIREMENTS.

REMARKS:
1. INTERCEPT & CONNECT TO NEAREST NON-SWITCHED PORTION OF LIGHTING CIRCUIT. TYPICAL FOR ALL EXIT SIGNS AND FIXTURES WITH INTEGRAL EMERGENCY BATTERY OPTION.
2. FIXTURE TO BE PROVIDED WITH INTEGRAL EMERGENCY BATTERY BACK-UP.
3. CONTRACTOR TO REFER TO ELECTRICAL FLOOR PLANS TO DETERMINE ORIENTATION OF FACES/ARROWS AND TO VERIFY MOUNTING TYPE.
4. PROVIDE EACH FIXTURE WITH STAINLESS STEEL MOUNTING BRACKETS FOR SURFACE MOUNTING AS SPECIFIED.
5. FIXTURE TO BE UL LISTED FOR USE IN A CLASS I DIVISION I GROUP D SPACE.
6. FIXTURE TO BE PROVIDED WITH INTEGRAL COLD WEATHER BATTERY PACK.
7. FIXTURE TO BE UL LISTED FOR WET LOCATIONS.
8. FIXTURE TO BE DARK SKY COMPLIANT.
9. REFER TO ELECTRICAL PLANS FOR MOUNTING HEIGHTS. FINAL MOUNTING HEIGHT TO BE COORDINATED WITH THE OWNER/ENGINEER PRIOR TO ROUGH-IN.
10. CONTRACTOR TO PROVIDE/INSTALL POLE. POLE TO BE MODEL NO. RTA30C7B4 (ROUND TAPERED ALUMINUM POLE) AS MANUFACTURED BY HAPCO OR APPROVED EQUAL. CONTRACTOR TO PROVIDE APPROPRIATE POLE TO ACHIEVE LIGHTING MOUNTING HEIGHT AS INDICATED ON THE ELECTRICAL PLANS. THIS CONTRACTOR IS RESPONSIBLE FOR PROVIDING ALL POLE MOUNTING/ANCHORING HARDWARE AS WELL AS ALL MOUNTING HARDWARE FOR ATTACHING PROPOSED LIGHT FIXTURE TO POLE. REFER TO 'TYPICAL POLE MOUNTED LIGHT FIXTURE INSTALLATION DETAIL' FOR ADDITIONAL INFORMATION/REQUIREMENTS.
11. PROVIDE LIGHT FIXTURE WITH STANDARD ARM FOR POLE MOUNTING AS INDICATED.
12. LIGHT FIXTURE TO BE DLC LISTED.
13. DRIVE CURRENT TO BE FACTORY SET AT 800MA.
14. REFER TO ELECTRICAL PLANS AND DETAILS FOR EXTERIOR LIGHTING CONTROL AND ADDITIONAL INFORMATION/REQUIREMENTS.
15. FIXTURE TO BE PROVIDED WITH 316 STAINLESS STEEL OPTION.
16. PROVIDE POLE WITH LIFETIME WARRANTY.
17. FIXTURE TO BE PROVIDED WITH EYE BOLT MOUNTING KIT AND STAINLESS STEEL MOUNTING CABLE AS REQUIRED TO SUSPEND 20'-0"A.F.F.
18. FIXTURE TO BE IC RATED.
19. FIXTURE TO BE UL LISTED FOR WET LOCATIONS WITH COVERED CEILINGS. PROVIDE GASKET KIT AS REQUIRED.
20. FIXTURE TO BE PROVIDED WITH HANGER BARS AS SPECIFIED.
21. FIXTURE TO BE PROVIDED WITH TELESCOPING POLE AND HANDRAIL MOUNTING BRACKET.
22. FIXTURE TO BE PROVIDED WITH OUTDOOR WIRELESS SENSOR WITH INTEGRAL PASSIVE INFRARED (PIR) OCCUPANCY AND PHOTOCELL. FIXTURE TO COME ON TO 100% OUTPUT WITH THE PHOTOCELL. AFTER 15 MINUTES OF NO MOTION DETECTED, FIXTURE TO DIM TO 50% OUTPUT. ONCE MOTION IS DETECTED AGAIN, FIXTURE TO GO BACK TO 100% OUTPUT WITH A 15 MINUTE TIME DELAY. PHOTOCELL TO TURN FIXTURE OFF AT DAWN. SETUP, CONFIGURATION, TIME DELAYS, AND LIGHTING OUTPUTS SHALL BE ABLE TO BE WIRELESSLY PROGRAMMED.

SWITCH TAG SCHEDULE

$ XX — TEXT ADJACENT TO SYMBOL REPRESENTS THE TAG

SWITCH TAG	DESCRIPTION	FACEPLATE COLOR	BASIS OF DESIGN FACEPLATE	SWITCH TYPE	BASIS OF DESIGN SWITCH	REMARKS
NO MARKING	STANDARD SWITCH	COORDINATE WITH OWNER/ENGINEER	THERMOPLASTIC NYLON	120V, 20A, HEAVY DUTY	PASS & SEYMOUR PT20AC1	
DCLV	DIMMABLE CONTROL LOW VOLTAGE LED SWITCH	COORDINATE WITH OWNER/ENGINEER	THERMOPLASTIC NYLON	LOW VOLTAGE	WATTSTOPPER DCLV-2	
LV	1-BUTTON LOW VOLTAGE LED SWITCH	COORDINATE WITH OWNER/ENGINEER	THERMOPLASTIC NYLON	LOW VOLTAGE	WATTSTOPPER LVSW-101	

GENERAL SCHEDULE NOTES:
1. NYLON FACEPLATE COLOR SHALL MATCH DEVICE COLOR.
2. ALL DEVICES SHALL BE PIGTAIL TYPE (WITH SEPARABLE WIRING HARNESS) WHERE AVAILABLE BY MANUFACTURER.
3. "a, b, c ..." LOWER CASE LETTERING IS USED TO INDICATE FIXTURE SWITCHING CONFIGURATION.
4. '3' OR '4' INDICATES 3 OR 4 WAY SWITCHING DEVICE. SUBSTITUTE INDICATED SWITCH TYPE (BASIS OF DESIGN COLUMN) WITH 3 OR 4 WAY VERSION.
5. REFER TO ELECTRICAL PLANS FOR TYPES, QUANTITIES, AND GENERAL LOCATIONS. REFER TO ELECTRICAL DETAILS FOR ADDITIONAL INFORMATION. COORDINATE FINAL REQUIREMENTS WITH THE OWNER AND ENGINEER.

OCCUPANCY SENSOR SCHEDULE

TYPE	TYPICAL USAGE	BASIS OF DESIGN	COVERAGE	TECHNOLOGY	MOUNTING	OPTIONS	REMARKS
A	GENERAL PURPOSE	WATTSTOPPER DT-200	2000SF WALKING/1000SF SITTING	DUAL TECHNOLOGY	CEILING/WALL	-	

GENERAL NOTES:
1. POWER PACKS NOT SHOWN ON PLAN. PROVIDE POWER PACKS AND ALL CIRCUITING AS REQUIRED FOR PROPER OPERATION OF LIGHTING SYSTEM. POWER PACKS SHALL BE MODEL "BZ" AS MANUFACTURED BY WATTSTOPPER OR APPROVED EQUAL. CONCEAL POWER PACK WITHIN CEILING/WALL ADJACENT TO SENSOR WHERE FEASIBLE.
2. CONTRACTOR TO FIELD ADJUST OCCUPANCY SENSORS AS REQUIRED TO LIGHT DESIRED AREAS. COORDINATE WITH OWNER AND ENGINEER.
3. COORDINATE FINAL DEVICE & FACEPLATE COLORS WITH OWNER.
4. "a, b, c ..." LOWER CASE LETTERING IS USED TO INDICATE FIXTURE SWITCHING CONFIGURATION.
5. REFER TO ELECTRICAL PLANS FOR TYPES, QUANTITIES, AND GENERAL LOCATIONS. REFER TO ELECTRICAL DETAILS FOR ADDITIONAL INFORMATION. COORDINATE FINAL REQUIREMENTS WITH THE OWNER AND ENGINEER.

PANEL HVP1
MBR BUILDING

400 AMP FRAME
MLO
480Y/277 VOLT 3ϕ, 4W+G
35KAIC RMS SYM

JSE

CIRCUIT NUMBER	CIRCUIT SERVED	BREAKER AMP	BREAKER POLE	BREAKER AMP	BREAKER POLE	CIRCUIT SERVED	CIRCUIT NUMBER
1	AIR COMPRESSOR A	20	3	20	3	AIR COMPRESSOR B	2
3							4
5							6
7	CRANE PANEL - 1	30	3	30	3	CRANE PANEL - 2	8
9							10
11							12
13	DRAIN PUMP CONTROL PANEL	20	3	40	3	SCUM PUMP CONTROL PANEL - 5	14
15							16
17							18
19	PRIMARY CLARIFIER CONTROL PANEL - 1	20	3	20	3	SCUM PUMP CONTROL PANEL - 1	20
21							22
23							24
25	PRIMARY CLARIFIER CONTROL PANEL - 2	20	3	20	3	SCUM PUMP CONTROL PANEL - 2	26
27							28
29							30
31	PRIMARY CLARIFIER CONTROL PANEL - 3	20	3	20	3	SCUM PUMP CONTROL PANEL - 3	32
33							34
35							36
37	PRIMARY CLARIFIER CONTROL PANEL - 4	20	3	20	3	SCUM PUMP CONTROL PANEL - 4	38
39							40
41							42
43	PRIMARY SLUDGE PUMP CONTROL PANEL	50	3	20	3	ELECTRIC UNIT HEATER EUH-300	44
45							46
47							48
49	ELECTRIC UNIT HEATER EUH-500	20	3	20	3	ELECTRIC UNIT HEATER EUH-504	50
51							52
53							54
55	ELECTRIC UNIT HEATER EUH-505	20	3	50	3	ELECTRIC UNIT HEATER EUH-507	56
57							58
59							60
61	ELECTRIC UNIT HEATER EUH-508	50	3	50	3	ELECTRIC UNIT HEATER EUH-509	62
63							64
65							66
67	ELECTRIC UNIT HEATER EUH-513	50	3	50	3	ELECTRIC UNIT HEATER EUH-514	68
69							70
71							72
73	ELECTRIC UNIT HEATER EUH-515	50	3	50	3	ELECTRIC UNIT HEATER EUH-516	74
75							76
77							78
79	ELECTRIC WATER HEATER EWH-500	30	3	100	3	SPARE	80
81							82
83							84
85	SLUICE GATE #1	20	3	60	3	SPARE	86
87							88
89							90
91	SLUICE GATE #2	20	3	30	3	SPARE	92
93							94
95							96
97	SLUICE GATE #3	20	3	15	3	SPARE	98
99							100
101							102
103	SLUICE GATE #4	20	3	20	1	POLE-MOUNTED SITE LIGHTS - NORTH	104
105				20	1	POLE-MOUNTED SITE LIGHTS - SOUTH	106
107				20	1	POLE-MOUNTED SITE LIGHTS - CENTRAL	108

GENERAL SCHEDULE NOTES:
1. PROVIDE SPARE BREAKERS AS INDICATED.
2. PROVIDE ARC FLASH WARNING LABEL PER SPECIFICATIONS.
3. PROVIDE TYPED PANEL DIRECTORY INDICATING LOADS SERVED.
4. REFER TO ELECTRICAL PLANS FOR GENERAL LOCATIONS OF EQUIPMENT.
5. PROVIDE ALL REQUIRED MOUNTING HARDWARE, BRACKETS, ACCESSORIES, ETC...
6. CONTRACTOR TO BALANCE PROPOSED PANEL LOAD ACROSS ALL PHASES EQUALLY.
7. VERIFY ALL CIRCUIT BREAKER REQUIREMENTS WITH EQUIPMENT MANUFACTURER. PROVIDE AS REQUIRED.
8. COORDINATE FINAL LABELING REQUIREMENTS WITH THE OWNER AND PROVIDE NAMEPLATE PER SPECIFICATIONS.
9. PROVIDE TOTAL NUMBER OF 1P SPACES AS INDICATED. PROVIDE BLOCK OFF PLATES FOR ALL SPACES WHICH ARE NOT UTILIZED.
10. REFER TO ELECTRICAL SINGLE LINE DIAGRAMS, RISER DIAGRAMS, SCHEDULES & SPECIFICATIONS FOR ADDITIONAL INFORMATION/REQUIREMENTS.
11. PROVIDE ALL REQUIRED GROUNDING PER PLANS AND SPECIFICATIONS. REFER TO ELECTRICAL DETAILS FOR ADDITIONAL INFORMATION/REQUIREMENTS.
12. PROVIDE LUG TERMINATION KITS, OR PIN ADAPTORS AS NECESSARY TO TERMINATE THE NUMBER OF SETS OF CONDUCTORS AND SIZE SHOWN/SPECIFIED.

ACCESSORIES & TRIM:
1. MOUNTING: SURFACE
2. NEMA 1 ENCLOSURE
3. DOOR-IN-DOOR COVER
4. COPPER BUS BARS
5. INTEGRAL SPD
6. INTEGRAL KWHD
7. TOP/BOTTOM FED
8. TWO-SECTION PANELBOARD
9. BASIS OF DESIGN: EATON

PANEL HVP3
HEADWORKS BUILDING

225 AMP FRAME
225A MCB
480Y/277 VOLT 3ϕ, 4W+G
35KAIC RMS SYM

JSE

CIRCUIT NUMBER	CIRCUIT SERVED	BREAKER AMP	BREAKER POLE	BREAKER AMP	BREAKER POLE	CIRCUIT SERVED	CIRCUIT NUMBER
1	SPACE	-	-	125	3	PANEL LVP3 VIA TRANSFORMER TR3	2
3	SPACE	-	-				4
5	SPACE	-	-				6
7	BAR SCREEN CONTROL PANEL - 1	20	3	20	3	BAR SCREEN CONTROL PANEL - 2	8
9							10
11							12
13	GRIT SYSTEM CONTROL PANEL - 1	40	3	40	3	GRIT SYSTEM CONTROL PANEL - 2	14
15							16
17							18
19	ELECTRIC UNIT HEATER EUH-200	50	3	50	3	ELECTRIC UNIT HEATER EUH-201	20
21							22
23							24
25	ELECTRIC UNIT HEATER EUH-202	50	3	20	3	ELECTRIC UNIT HEATER EUH-203	26
27							28
29							30
31	SPARE	100	3	60	3	SPARE	32
33							34
35							36
37	SPARE	30	3	15	3	SPARE	38
39							40
41							42
43	SPARE	40	2	-	-	SPACE	44
45				-	-	SPACE	46
47	SPARE	20	2	-	-	SPACE	48
49				-	-	SPACE	50
51	SPARE	20	1	-	-	SPACE	52
53	SPARE	20	1	-	-	SPACE	54

GENERAL SCHEDULE NOTES:
1. PROVIDE SPARE BREAKERS AS INDICATED.
2. PROVIDE ARC FLASH WARNING LABEL PER SPECIFICATIONS.
3. PROVIDE TYPED PANEL DIRECTORY INDICATING LOADS SERVED.
4. REFER TO ELECTRICAL PLANS FOR GENERAL LOCATIONS OF EQUIPMENT.
5. PROVIDE ALL REQUIRED MOUNTING HARDWARE, BRACKETS, ACCESSORIES, ETC...
6. CONTRACTOR TO BALANCE PROPOSED PANEL LOAD ACROSS ALL PHASES EQUALLY.
7. VERIFY ALL CIRCUIT BREAKER REQUIREMENTS WITH EQUIPMENT MANUFACTURER. PROVIDE AS REQUIRED.
8. COORDINATE FINAL LABELING REQUIREMENTS WITH THE OWNER AND PROVIDE NAMEPLATE PER SPECIFICATIONS.
9. PROVIDE TOTAL NUMBER OF 1P SPACES AS INDICATED. PROVIDE BLOCK OFF PLATES FOR ALL SPACES WHICH ARE NOT UTILIZED.
10. REFER TO ELECTRICAL SINGLE LINE DIAGRAMS, RISER DIAGRAMS, SCHEDULES & SPECIFICATIONS FOR ADDITIONAL INFORMATION/REQUIREMENTS.
11. PROVIDE ALL REQUIRED GROUNDING PER PLANS AND SPECIFICATIONS. REFER TO ELECTRICAL DETAILS FOR ADDITIONAL INFORMATION/REQUIREMENTS.
12. PROVIDE LUG TERMINATION KITS, OR PIN ADAPTORS AS NECESSARY TO TERMINATE THE NUMBER OF SETS OF CONDUCTORS AND SIZE SHOWN/SPECIFIED.

ACCESSORIES & TRIM:
1. MOUNTING: SURFACE
2. NEMA 1 ENCLOSURE
3. DOOR-IN-DOOR COVER
4. COPPER BUS BARS
5. INTEGRAL SPD
6. INTEGRAL KWHD
7. TOP/BOTTOM FED
8. BASIS OF DESIGN: EATON

PANEL LVP1
MBR BUILDING

400 AMP FRAME
400A MCB
208Y/120 VOLT 3ϕ, 4W+G
22KAIC RMS SYM

JSE

CIRCUIT NUMBER	CIRCUIT SERVED	BREAKER AMP	BREAKER POLE	BREAKER AMP	BREAKER POLE	CIRCUIT SERVED	CIRCUIT NUMBER
1	NAOH METERING PUMP 15-P-301-A	20	1	20	1	NAOH METERING PUMP 15-P-301-B	2
3	NACLO METERING PUMP 23-P-101-A	20	1	20	1	NACLO METERING PUMP 23-P-101-B	4
5	RECEPTS. - CHEMICAL ROOMS	20	1	20	1	RECEPTS. - ELECTRICAL ROOM	6
7	RECEPTS. - MECHANICAL/STORAGE ROOM	20	1	20	1	RECEPTS. - MEMBRANE ZONE	8
9	CHEMICAL ROOM EXHAUST FAN EF-500	20	1	20	1	RECEPTS. - ELEVATED OFFICE	10
11	LIGHTS - ELECTRICAL / BLOWER ROOM	20	1	20	1	LIGHTS - CHEMICAL ROOMS	12
13	LIGHTS - RAS PUMP ROOM	20	1	20	1	LIGHTS - SECOND FLOOR	14
15	LIGHTS - EXTERIOR	20	1	20	1	LIGHTS - MEMBRANE ZONE	16
17	LIGHTS - ELEVATED OFFICE	20	1	20	1	RECEPTS. - ELECTRICAL/BLOWER ROOM	18
19	RECEPTS. - EXTERIOR	20	1	20	1	CHEMICAL TRANSFER PUMP #1	20
21	CHEMICAL TRANSFER PUMP #2	20	1	20	1	LEVEL TRANSMITTER 15-LIT-301	22
23	NAOH FILL STATION CONTROL PANEL	20	1	20	1	LEVEL TRANSMITTER 15-LIT-302	24
25	NACLO FILL STATION CONTROL PANEL	20	1	20	1	LEVEL TRANSMITTER 23-LIT-101	26
27	DATA RACK	20	1	20	1	LEVEL TRANSMITTER 23-LIT-102	28
29	SECURITY CONTROL PANEL	20	1	20	1	LEVEL TRANSMITTER 23-LIT-103	30
31	FIRE ALARM CONTROL PANEL	20	1	20	1	LEAK DETECTION CONTROLLER LDC-500	32
33	HVAC MONITORING CONTROL PANEL	20	1	20	1	AUTOMATIC DRAIN VALVE 90-FV-001-A	34
35	AIR DRYER 90-DR-001-A	20	1	20	1	AUTOMATIC DRAIN VALVE 90-FV-001-B	36
37	AIR DRYER 90-DR-001-B	20	1	20	1	AUTOMATIC DRAIN VALVE 90-FV-011	38
39	OVERHEAD DOOR	20	1	20	1	OVERHEAD DOOR	40
41	REMOTE I/O PANEL #1	30	1	30	1	BLOWER COOLING FAN CONTROL PANEL	42
43	SLUDGE PIT EXHAUST FAN EF-300	20	1	30	1	ELECTRIC WATER HEATER EWH-501	44
45	SLUDGE VALVE PIT EXHAUST FAN EF-301	20	1	20	1	RECIRCULATION PUMP RCP-500	46
47	DUCTLESS SPLIT SYSTEM	20	2	20	1	STATIONARY ROOF VENTILATOR SRV-300	48
49				20	1	STATIONARY ROOF VENTILATOR SRV-500	50
51	ELECTRIC UNIT HEATER EUH-501	30	3	30	3	ELECTRIC UNIT HEATER EUH-502	52
53							54
55							56
57	ELECTRIC UNIT HEATER EUH-503	30	3	30	3	ELECTRIC UNIT HEATER EUH-506	58
59							60
61							62
63	ELECTRIC UNIT HEATER EUH-510	30	3	30	3	ELECTRIC UNIT HEATER EUH-511	64
65							66
67							68
69	ELECTRIC UNIT HEATER EUH-512	30	3	30	3	ELECTRIC UNIT HEATER EUH-519	70
71							72
73							74
75	LOUVER W/MOTORIZED DAMPER LV-500	20	1	30	3	SLUDGE VALVE PIT ELECTRIC UNIT HEATER EUH-301	76
77	LOUVER W/MOTORIZED DAMPER LV-501	20	1				78
79	LOUVER W/MOTORIZED DAMPER LV-502	20	1				80
81	LOUVER W/MOTORIZED DAMPER LV-503	20	1	30	2	HEAT TRACE SYSTEM	82
83	LOUVER W/MOTORIZED DAMPER LV-504	20	1				84
85	LOUVER W/MOTORIZED DAMPER LV-505	20	1	100	2	GENERATOR #1 LOADCENTER	86
87	LOUVER W/MOTORIZED DAMPER LV-506	20	1				88
89	LOUVER W/MOTORIZED DAMPER LV-507	20	1	100	2	GENERATOR #2 LOADCENTER	90
91	SUPPLY FAN SF-500	20	1				92
93	SPARE	100	3	60	3	SPARE	94
95							96
97							98
99	SPARE	30	3	15	3	SPARE	100
101							102
103							104
105	SPARE	40	2	20	2	SPARE	106
107							108
109	RAS PUMP ROOM EXHAUST FAN EF-501	20	2	20	2	BLOWER ROOM EXHAUST FAN EF-502	110
111							112
113	BLOWER ROOM EXHAUST FAN EF-503	20	2	20	2	MEMBRANE AREA EXHAUST FAN EF-505	114
115							116
117	MEMBRANE AREA EXHAUST FAN EF-506	20	2	20	2	MEMBRANE AREA EXHAUST FAN EF-507	118
119							120
121	ELECTRICAL ROOM EXHAUST FAN EF-504	20	1	20	2	MEMBRANE AREA EXHAUST FAN EF-508	122
123	PRIMARY SLUDGE PIT DEHUMIDIFIER	20	1				124
125	PRIMARY SETTLING TANK #1 LIGHTS	20	1	20	1	PRIMARY SETTLING TANK #1 RECEPTACLES	126
127	PRIMARY SETTLING TANK #2 LIGHTS	20	1	20	1	PRIMARY SETTLING TANK #2 RECEPTACLES	128
129	PRIMARY SETTLING TANK #3 LIGHTS	20	1	20	1	PRIMARY SETTLING TANK #3 RECEPTACLES	130
131	PRIMARY SETTLING TANK #4 LIGHTS	20	1	20	1	PRIMARY SETTLING TANK #4 RECEPTACLES	132
133	SLUDGE CONTROL VALVE VAULT LIGHT	20	1	20	1	SLUDGE CONTROL VALVE VAULT SUMP PUMP	134
135	SLUDGE VALVE PIT LIGHT	20	1	20	1	SLUDGE VALVE PIT SUMP PUMP	136
137	PRIMARY SLUDGE PIT LIGHT	20	1	20	1	PRIMARY SLUDGE PIT SUMP PUMP	138
139	ELECTRICAL BACKBOARD LIGHT	20	1	20	1	ELECTRICAL BACKBOARD RECEPTACLE	140
141	PRIMARY SLUDGE VALVE CONTROL PANEL	20	1	20	1	LEVEL TRANSDUCER TRANSMITTER LTT-300	142
143	MBR CONTROL PANEL	30	1	20	1	TEMPERATURE SENSOR TRANSMITTER 20-TIT-301	144
145	TURBIDITY PANEL #1	20	1	20	1	TURBIDITY PANEL #2	146
147	TURBIDITY PANEL #3	20	1	20	1	TURBIDITY PANEL #4	148
149	SAMPLING PUMP 20-P-321-1	20	1	20	1	SAMPLING PUMP 20-P-321-2	150
151	SAMPLING PUMP 20-P-321-3	20	1	20	1	SAMPLING PUMP 20-P-321-4	152
153	SPARE	30	1	30	1	SPARE	154
155	SPARE	15	1	15	1	SPARE	156
157	SPARE	20	1	20	1	SPARE	158
159	SPARE	20	1	20	1	SPARE	160
161	SPARE	20	1	20	1	SPARE	162
163	CITRIC ACID METERING PUMP 23-P-301-A	20	1	20	1	CITRIC ACID METERING PUMP 23-P-301-B	164
165	LEVEL TRANSMITTER 23-LIT-301	20	1	20	1	LEVEL TRANSMITTER 20-LIT-200	166
167	LEVEL TRANSMITTER 20-LIT-203-1	20	1	20	1	LEVEL TRANSMITTER 20-LIT-203-2	168
169	LEVEL TRANSMITTER 20-LIT-203-3	20	1	20	1	LEVEL TRANSMITTER 20-LIT-203-4	170
171	PRESSURE TRANSMITTER 20-PIT-301-1	20	1	20	1	PRESSURE TRANSMITTER 20-PIT-301-2	172
173	PRESSURE TRANSMITTER 20-PIT-301-3	20	1	20	1	PRESSURE TRANSMITTER 20-PIT-301-4	174
175	DO/PH PROBE CONTROLLER 16-AIT-403-1	20	1	20	1	DO/PH PROBE CONTROLLER 16-AIT-403-2	176
177	DO/PH PROBE CONTROLLER 16-AIT-403-3	20	1	20	1	DO PROBE CONTROLLER 16-AIT-405-1	178
179	DO PROBE CONTROLLER 16-AIT-405-2	20	1	20	1	DO PROBE CONTROLLER 16-AIT-405-3	180
181	FLOW TRANSMITTER 16-FIT-301-1	20	1	20	1	FLOW TRANSMITTER 16-FIT-301-2	182
183	FLOW TRANSMITTER 16-FIT-301-3	20	1	20	1	FLOW TRANSMITTER 16-FIT-301-4	184
185	FLOW TRANSMITTER 16-FIT-707	20	1	20	1	FLOW TRANSMITTER 20-FIT-602	186
187	SPACE	-	-	-	-	SPACE	188
189	SPACE	-	-	-	-	SPACE	190
191	SPACE	-	-	-	-	SPACE	192
193	SPACE	-	-	-	-	SPACE	194
195	SPACE	-	-	-	-	SPACE	196
197	SPACE	-	-	-	-	SPACE	198
199	SPACE	-	-	-	-	SPACE	200
201	SPACE	-	-	-	-	SPACE	202
203	SPACE	-	-	-	-	SPACE	204
205	SPACE	-	-	-	-	SPACE	206
207	SPACE	-	-	-	-	SPACE	208
209	SPACE	-	-	-	-	SPACE	210
211	SPACE	-	-	-	-	SPACE	212
213	SPACE	-	-	-	-	SPACE	214
215	SPACE	-	-	-	-	SPACE	216

GENERAL SCHEDULE NOTES:
1. PROVIDE SPARE BREAKERS AS INDICATED.
2. PROVIDE ARC FLASH WARNING LABEL PER SPECIFICATIONS.
3. PROVIDE TYPED PANEL DIRECTORY INDICATING LOADS SERVED.
4. REFER TO ELECTRICAL PLANS FOR GENERAL LOCATIONS OF EQUIPMENT.
5. PROVIDE ALL REQUIRED MOUNTING HARDWARE, BRACKETS, ACCESSORIES, ETC...
6. CONTRACTOR TO BALANCE PROPOSED PANEL LOAD ACROSS ALL PHASES EQUALLY.
7. VERIFY ALL CIRCUIT BREAKER REQUIREMENTS WITH EQUIPMENT MANUFACTURER. PROVIDE AS REQUIRED.
8. COORDINATE FINAL LABELING REQUIREMENTS WITH THE OWNER AND PROVIDE NAMEPLATE PER SPECIFICATIONS.
9. PROVIDE TOTAL NUMBER OF 1P SPACES AS INDICATED. PROVIDE BLOCK OFF PLATES FOR ALL SPACES WHICH ARE NOT UTILIZED.
10. REFER TO ELECTRICAL SINGLE LINE DIAGRAMS, RISER DIAGRAMS, SCHEDULES & SPECIFICATIONS FOR ADDITIONAL INFORMATION/REQUIREMENTS.
11. PROVIDE ALL REQUIRED GROUNDING PER PLANS AND SPECIFICATIONS. REFER TO ELECTRICAL DETAILS FOR ADDITIONAL INFORMATION/REQUIREMENTS.
12. PROVIDE LUG TERMINATION KITS, OR PIN ADAPTORS AS NECESSARY TO TERMINATE THE NUMBER OF SETS OF CONDUCTORS AND SIZE SHOWN/SPECIFIED.

ACCESSORIES & TRIM:
1. MOUNTING: SURFACE
2. NEMA 1 ENCLOSURE
3. DOOR-IN-DOOR COVER
4. COPPER BUS BARS
5. TOP/BOTTOM FED
6. FOUR-SECTION PANELBOARD
7. 400A FEED-THRU LUGS
8. BASIS OF DESIGN: EATON

MHE ENGINEERING
33 Airport Center Drive, Suite 202
New Windsor, NY 12553
(845) 567-3100
111 Wheatfield Drive, Suite 1
Milford, PA 18337
(570) 296-2765

BID ADDENDUM

JSE
JADE STONE ENGINEERING

STATE OF NEW YORK
JEFFREY E ROBINSON
095896
LICENSED PROFESSIONAL ENGINEER

HAZARDOUS MATERIAL NOTE:
THE SERVICES PROVIDED BY MHE, INCLUDING ALL WORK DEPICTED ON MHE PLANS, DO NOT INCLUDE SERVICES RELATED TO THE IDENTIFICATION, CONTROLS OR HANDLING OF HAZARDOUS MATERIALS, INCLUDING SUCH MATERIALS AS ASBESTOS AND LEAD PAINT. ALL TESTING, IDENTIFICATION, ABATEMENT, CONTROLS, AND HANDLING OF HAZARDOUS MATERIALS SHALL BE UNDERTAKEN BY A HAZARDOUS MATERIAL CONSULTANT AND CERTIFIED PROFESSIONALS. IF SUCH MATERIALS HAVE BEEN IDENTIFIED, CONTRACTOR WILL COMMUNICATE DIRECTLY WITH HAZARDOUS MATERIAL PROFESSIONAL FOR THE PERFORMANCE OF ANY WORK ON OR ADJACENT TO SAID MATERIALS. IF UNIDENTIFIED MATERIALS OF CONCERN ARE ENCOUNTERED WHILE UNDERTAKING THE WORK SHOWN HEREON, CONTRACTOR SHALL IMMEDIATELY NOTIFY ENGINEER AND OWNER, AND SHALL OBTAIN DIRECTION FROM THE HAZARDOUS MATERIAL CONSULTANT PRIOR TO THE CONTINUATION OF WORK INVOLVING SUSPECTED MATERIAL.

UDIG·NY
SAFE DIGGING STARTS HERE
CALL 811

UNAUTHORIZED ADDITION OR ALTERATION OF THIS PLAN IS A VIOLATION OF SECTION 7209(2) OF THE NEW YORK STATE EDUCATION LAW.

ALL PRODUCTION & INTELLECTUAL PROPERTY RIGHT RESERVED ©

CAESARS LANE WWTP EXPANSION PROJECT: PHASE 2
145 CAESARS LN.
NEW WINDSOR, NY 12553

FOR TOWN OF NEW WINDSOR
555 UNION AVE.
NEW WINDSOR, NY 12553

ELECTRICAL SCHEDULES

REVISIONS

NO.	DESCRIPTION	DATE

ISSUED DATE: 06 JUNE, 2025
DESIGN BY: RRM
DRAWN BY: CDJ
CHECKED BY: MGR
REVIEWED BY: JER
SHEET NO.

E-042

PROJECT # 18-732 PHASE #

400 AMP FRAME
400A MCB
480Y/277 VOLT 3ϕ, 4W+G
35KAIC RMS SYM

PANEL HVP4
DEWATERING BUILDING

CIRCUIT NUMBER	CIRCUIT SERVED	BREAKER AMP	BREAKER POLE	BREAKER AMP	BREAKER POLE	CIRCUIT SERVED	CIRCUIT NUMBER
1	PANEL LVP4 VIA TRANSFORMER TR4	125	3	125	3	PANEL BP-LVP VIA TRANSFORMER BP-TR	2
3							4
5							6
7	PUMP P-700	20	3	20	3	BOILER PUMP BP-700	8
9							10
11							12
13	PUMP P-701	20	3	20	3	BOILER PUMP BP-701	14
15							16
17							18
19	SUMP PUMP CONTROL PANEL	30	3	100	3	SPARE	20
21							22
23							24
25	SPARE	40	2	60	3	SPARE	26
27							28
29	SPARE	20	2				30
31				30	3	SPARE	32
33	SPARE	30	1				34
35	SPARE	15	1				36
37	SPARE	20	1	15	3	SPARE	38
39	SPARE	20	1				40
41	SPARE	20	1				42
43	SPACE	-	-	-	-	SPACE	44
45	SPACE	-	-	-	-	SPACE	46
47	SPACE	-	-	-	-	SPACE	48
49	SPACE	-	-	-	-	SPACE	50
51	SPACE	-	-	-	-	SPACE	52
53	SPACE	-	-	-	-	SPACE	54

GENERAL SCHEDULE NOTES:

1. PROVIDE SPARE BREAKERS AS INDICATED.
2. PROVIDE ARC FLASH WARNING LABEL PER SPECIFICATIONS.
3. PROVIDE TYPED PANEL DIRECTORY INDICATING LOADS SERVED.
4. REFER TO ELECTRICAL PLANS FOR GENERAL LOCATIONS OF EQUIPMENT.
5. PROVIDE ALL REQUIRED MOUNTING HARDWARE, BRACKETS, ACCESSORIES, ETC...
6. CONTRACTOR TO BALANCE PROPOSED PANEL LOAD ACROSS ALL PHASES EQUALLY.
7. VERIFY ALL CIRCUIT BREAKER REQUIREMENTS WITH EQUIPMENT MANUFACTURER. PROVIDE AS REQUIRED.
8. COORDINATE FINAL LABELING REQUIREMENTS WITH THE OWNER AND PROVIDE NAMEPLATE PER SPECIFICATIONS.
9. PROVIDE TOTAL NUMBER OF 1P SPACES AS INDICATED. PROVIDE BLOCK OFF PLATES FOR ALL SPACES WHICH ARE NOT UTILIZED.
10. REFER TO ELECTRICAL SINGLE LINE DIAGRAMS, RISER DIAGRAMS, SCHEDULES & SPECIFICATIONS FOR ADDITIONAL INFORMATION/REQUIREMENTS.
11. PROVIDE ALL REQUIRED GROUNDING PER PLANS AND SPECIFICATIONS. REFER TO ELECTRICAL DETAILS FOR ADDITIONAL INFORMATION/REQUIREMENTS.
12. PROVIDE LUG TERMINATION KITS, OR PIN ADAPTORS AS NECESSARY TO TERMINATE THE NUMBER OF SETS OF CONDUCTORS AND SIZE SHOWN/SPECIFIED.

ACCESSORIES & TRIM:

1. MOUNTING: SURFACE
2. NEMA 1 ENCLOSURE
3. DOOR-IN-DOOR COVER
4. COPPER BUS BARS
5. INTEGRAL SPD
6. INTEGRAL KWHD
7. TOP/BOTTOM FED
8. BASIS OF DESIGN: EATON

225 AMP FRAME
2225A MCB
208Y/120 VOLT 3ϕ, 4W+G
22KAIC RMS SYM

PANEL LVP4
DEWATERING BUILDING

CIRCUIT NUMBER	CIRCUIT SERVED	BREAKER AMP	BREAKER POLE	BREAKER AMP	BREAKER POLE	CIRCUIT SERVED	CIRCUIT NUMBER
1	LIGHTS - MECHANICAL OPERATIONS ROOM	20	1	20	1	LIGHTS - ELECT. / MECH. ROOMS & OFFICES	2
3	LIGHTS - ENTRY / LOBBY, KITCHEN, & OFFICE	20	1	20	1	LIGHTS - LOCKER ROOMS	4
5	RECEPTS. - ENTRY DRINKING FOUNTAIN	20	1	20	1	LIGHTS - EXTERIOR	6
7	LIGHTS - SHOP/MECHANICAL ROOM	20	1	20	1	LIGHTS - DUMPSTER AREA	8
9	RECEPTS. - MECHANICAL OPERATION ROOM	20	1	20	1	RECEPTS. - OFFICE	10
11	RECEPTS. - OFFICE	20	1	20	1	RECEPTS. - ENTRY / LOBBY	12
13	RECEPTS. - KITCHEN	20	1	20	1	RECEPTS. - KITCHEN REFRIGERATOR	14
15	RECEPTS. - LOCKER ROOM	20	1	20	1	RECEPTS. - OFFICE	16
17	RECEPTS. - BASEMENT MECHANICAL ROOM	20	1	20	1	RECEPTS. - STORAGE ROOM	18
19	RECEPTS. - DUMPSTER AREA	20	1	20	1	RECEPTS. - SHOP	20
21	RECEPTS. - EXTERIOR	20	1	20	1	RECEPTS. - MECHANICAL ROOM	22
23	FIRE ALARM CONTROL PANEL	20	1	20	1	RECEPTS. - ELECTRICAL ROOM	24
25	SECURITY CONTROL PANEL	20	1	20	1	DATA RACK	26
27	HVAC MONITORING CONTROL PANEL	20	1	30	1	REMOTE I/O PANEL #2	28
29	OVERHEAD DOOR - MECH. OPERATIONS RM.	20	1	20	1	OVERHEAD DOOR - MECH. OPERATIONS RM.	30
31	OVERHEAD DOOR - DUMPSTER AREA	20	1	20	1	OVERHEAD DOOR - DUMPSTER AREA	32
33	WATER HEATER WH-700	15	1	15	1	RECIRCULATION PUMP RCP-700	34
35	HYDRONIC UNIT HEATER HUH-700	20	1	20	1	BOILER B-700	36
37	HYDRONIC UNIT HEATER HUH-701	20	1	20	1	BOILER B-701	38
39	HYDRONIC UNIT HEATER HUH-702	20	1	20	1	LOUVER W/MOTORIZED DAMPER LV-700	40
41	HYDRONIC UNIT HEATER HUH-703	20	1	20	1	LOUVER W/MOTORIZED DAMPER LV-701	42
43	HYDRONIC UNIT HEATER HUH-704	20	1	20	1	SUPPLY FAN SF-700	44
45	HYDRONIC UNIT HEATER HUH-705	20	1	20	1	SUPPLY FAN SF-701	46
47	HYDRONIC UNIT HEATER HUH-706	20	1	20	2	EXHAUST FAN EF-700	48
49	HYDRONIC UNIT HEATER HUH-707	20	1				50
51	FURNACE F-700	20	1	20	2	EXHAUST FAN EF-701	52
53	DUCTLESS SPLIT SYSTEM DSCU-700	20	2				54
55				20	1	EXHAUST FAN EF-702	56
57	DUCTLESS SPLIT SYSTEM DSCU-701	20	2	50	2	DUCTLESS SPLIT SYSTEM DSCU-702	58
59							60
61	SPARE	100	3	60	3	SPARE	62
63							64
65							66
67	SPARE	30	3	15	3	SPARE	68
69							70
71							72
73	SPARE	40	2	20	2	SPARE	74
75							76
77	SPARE	30	1	30	1	SPARE	78
79	SPARE	15	1	15	1	SPARE	80
81	SPARE	20	1	20	1	SPARE	82
83	SPARE	20	1	20	1	SPARE	84
85	SPACE	–	–	–	–	SPACE	86
87	SPACE	–	–	–	–	SPACE	88
89	SPACE	–	–	–	–	SPACE	90
91	SPACE	–	–	–	–	SPACE	92
93	SPACE	–	–	–	–	SPACE	94
95	SPACE	–	–	–	–	SPACE	96
97	SPACE	–	–	–	–	SPACE	98
99	SPACE	–	–	–	–	SPACE	100
101	SPACE	–	–	–	–	SPACE	102
103	SPACE	–	–	–	–	SPACE	104
105	SPACE	–	–	–	–	SPACE	106
107	SPACE	–	–	–	–	SPACE	108

GENERAL SCHEDULE NOTES:

1. PROVIDE SPARE BREAKERS AS INDICATED.
2. PROVIDE ARC FLASH WARNING LABEL PER SPECIFICATIONS.
3. PROVIDE TYPED PANEL DIRECTORY INDICATING LOADS SERVED.
4. REFER TO ELECTRICAL PLANS FOR GENERAL LOCATIONS OF EQUIPMENT.
5. PROVIDE ALL REQUIRED MOUNTING HARDWARE, BRACKETS, ACCESSORIES, ETC...
6. CONTRACTOR TO BALANCE PROPOSED PANEL LOAD ACROSS ALL PHASES EQUALLY.
7. VERIFY ALL CIRCUIT BREAKER REQUIREMENTS WITH EQUIPMENT MANUFACTURER. PROVIDE AS REQUIRED.
8. COORDINATE FINAL LABELING REQUIREMENTS WITH THE OWNER AND PROVIDE NAMEPLATE PER SPECIFICATIONS.
9. PROVIDE TOTAL NUMBER OF 1P SPACES AS INDICATED. PROVIDE BLOCK OFF PLATES FOR ALL SPACES WHICH ARE NOT UTILIZED.
10. REFER TO ELECTRICAL SINGLE LINE DIAGRAMS, RISER DIAGRAMS, SCHEDULES & SPECIFICATIONS FOR ADDITIONAL INFORMATION/REQUIREMENTS.
11. PROVIDE ALL REQUIRED GROUNDING PER PLANS AND SPECIFICATIONS. REFER TO ELECTRICAL DETAILS FOR ADDITIONAL INFORMATION/REQUIREMENTS.
12. PROVIDE LUG TERMINATION KITS, OR PIN ADAPTORS AS NECESSARY TO TERMINATE THE NUMBER OF SETS OF CONDUCTORS AND SIZE SHOWN/SPECIFIED.

ACCESSORIES & TRIM:

1. MOUNTING: SURFACE
2. NEMA 1 ENCLOSURE
3. DOOR-IN-DOOR COVER
4. COPPER BUS BARS
5. TOP/BOTTOM FED
6. TWO-SECTION PANELBOARD
7. BASIS OF DESIGN: EATON

225AMP FRAME
MLO
480Y/277 VOLT 3ϕ, 4W+G
35KAIC RMS SYM

PANEL HVP5
ATAD BUILDING

CIRCUIT NUMBER	CIRCUIT SERVED	BREAKER AMP	BREAKER POLE	BREAKER AMP	BREAKER POLE	CIRCUIT SERVED	CIRCUIT NUMBER
1	PANEL LVP5 VIA TRANSFORMER TR5	50	3	40	3	BELT PRESS SLUDGE FEED PUMP BPSFP-03	2
3							4
5							6
7	ELECTRIC UNIT HEATER EUH-400	50	3	40	3	BELT PRESS SLUDGE FEED PUMP BPSFP-04	8
9							10
11							12
13	ELECTRIC UNIT HEATER EUH-401	50	3	50	3	ELECTRIC UNIT HEATER EUH-402	14
15							16
17							18
19	ELECTRIC WATER HEATER EWH-400	30	3	20	3	ELECTRIC UNIT HEATER EUH-403	20
21							22
23							24
25	SPARE	100	3	60	3	SPARE	26
27							28
29							30
31	SPARE	30	3	15	3	SPARE	32
33							34
35							36
37	SPARE	40	2	30	1	SPARE	38
39				30	1	SPARE	40
41	SPARE	20	2	15	1	SPARE	42
43				15	1	SPARE	44
45	SPARE	20	1	20	1	SPARE	46
47	SPARE	20	1	20	1	SPARE	48
49	SPACE	-	-	-	-	SPACE	50
51	SPACE	-	-	-	-	SPACE	52
53	SPACE	-	-	-	-	SPACE	54

GENERAL SCHEDULE NOTES:

1. PROVIDE SPARE BREAKERS AS INDICATED.
2. PROVIDE ARC FLASH WARNING LABEL PER SPECIFICATIONS.
3. PROVIDE TYPED PANEL DIRECTORY INDICATING LOADS SERVED.
4. REFER TO ELECTRICAL PLANS FOR GENERAL LOCATIONS OF EQUIPMENT.
5. PROVIDE ALL REQUIRED MOUNTING HARDWARE, BRACKETS, ACCESSORIES, ETC...
6. CONTRACTOR TO BALANCE PROPOSED PANEL LOAD ACROSS ALL PHASES EQUALLY.
7. VERIFY ALL CIRCUIT BREAKER REQUIREMENTS WITH EQUIPMENT MANUFACTURER. PROVIDE AS REQUIRED.
8. COORDINATE FINAL LABELING REQUIREMENTS WITH THE OWNER AND PROVIDE NAMEPLATE PER SPECIFICATIONS.
9. PROVIDE TOTAL NUMBER OF 1P SPACES AS INDICATED. PROVIDE BLOCK OFF PLATES FOR ALL SPACES WHICH ARE NOT UTILIZED.
10. REFER TO ELECTRICAL SINGLE LINE DIAGRAMS, RISER DIAGRAMS, SCHEDULES & SPECIFICATIONS FOR ADDITIONAL INFORMATION/REQUIREMENTS.
11. PROVIDE ALL REQUIRED GROUNDING PER PLANS AND SPECIFICATIONS. REFER TO ELECTRICAL DETAILS FOR ADDITIONAL INFORMATION/REQUIREMENTS.
12. PROVIDE LUG TERMINATION KITS, OR PIN ADAPTORS AS NECESSARY TO TERMINATE THE NUMBER OF SETS OF CONDUCTORS AND SIZE SHOWN/SPECIFIED.

ACCESSORIES & TRIM:

1. MOUNTING: SURFACE
2. NEMA 1 ENCLOSURE
3. DOOR-IN-DOOR COVER
4. COPPER BUS BARS
5. INTEGRAL SPD
6. INTEGRAL KWHD
7. TOP/BOTTOM FED
8. BASIS OF DESIGN: EATON

100 AMP FRAME
100A MCB
208Y/120 VOLT 3ϕ, 4W+G
22KAIC RMS SYM

PANEL LVP5
ATAD BUILDING

CIRCUIT NUMBER	CIRCUIT SERVED	BREAKER AMP	BREAKER POLE	BREAKER AMP	BREAKER POLE	CIRCUIT SERVED	CIRCUIT NUMBER
1	RECEPTS. - EQUIPMENT ROOM	20	1	20	1	LIGHTS - EQUIPMENT ROOM	2
3	RECEPTS. - THICKENING ROOM	20	1	20	1	LIGHTS - THICKENING ROOM	4
5	RECEPTS. - ELECTRICAL ROOM	20	1	20	1	LIGHTS - ELECTRICAL ROOM	6
7	RECEPTS. - EXTERIOR	20	1	20	1	LIGHTS - EXTERIOR	8
9	FERRIC SKID	20	1	20	1	OVERHEAD DOOR	10
11	FERRIC SKID	20	1	20	1	OVERHEAD DOOR	12
13	FIRE ALARM CONTROL PANEL	20	1	20	1	DATA RACK	14
15	SECURITY CONTROL PANEL	20	1	20	1	HVAC MONITORING CONTROL PANEL	16
17	REMOTE I/O PANEL 4	30	1	20	1	STATIONARY ROOF VENTILATOR SRV-400	18
19	SUPPLY FAN SF-400	20	1	20	1	LOUVER W/MOTORIZED DAMPER LV-400	20
21	EXHAUST FAN EF-400	20	2	20	1	LOUVER W/MOTORIZED DAMPER LV-401	22
23				20	1	LOUVER W/MOTORIZED DAMPER LV-402	24
25	EXHAUST FAN EF-401	20	1	100	3	SPARE	26
27	DUCTLESS SPLIT SYSTEM	30	2				28
29							30
31	SPARE	40	2	60	3	SPARE	32
33							34
35	SPARE	20	2				36
37				30	3	SPARE	38
39	SPARE	30	1				40
41	SPARE	15	1				42
43	SPARE	20	1	15	3	SPARE	44
45	SPARE	20	1				46
47	SPARE	20	1				48
49	SPACE	-	-	-	-	SPACE	50
51	SPACE	-	-	-	-	SPACE	52
53	SPACE	-	-	-	-	SPACE	54

GENERAL SCHEDULE NOTES:

1. PROVIDE SPARE BREAKERS AS INDICATED.
2. PROVIDE ARC FLASH WARNING LABEL PER SPECIFICATIONS.
3. PROVIDE TYPED PANEL DIRECTORY INDICATING LOADS SERVED.
4. REFER TO ELECTRICAL PLANS FOR GENERAL LOCATIONS OF EQUIPMENT.
5. PROVIDE ALL REQUIRED MOUNTING HARDWARE, BRACKETS, ACCESSORIES, ETC...
6. CONTRACTOR TO BALANCE PROPOSED PANEL LOAD ACROSS ALL PHASES EQUALLY.
7. VERIFY ALL CIRCUIT BREAKER REQUIREMENTS WITH EQUIPMENT MANUFACTURER. PROVIDE AS REQUIRED.
8. COORDINATE FINAL LABELING REQUIREMENTS WITH THE OWNER AND PROVIDE NAMEPLATE PER SPECIFICATIONS.
9. PROVIDE TOTAL NUMBER OF 1P SPACES AS INDICATED. PROVIDE BLOCK OFF PLATES FOR ALL SPACES WHICH ARE NOT UTILIZED.
10. REFER TO ELECTRICAL SINGLE LINE DIAGRAMS, RISER DIAGRAMS, SCHEDULES & SPECIFICATIONS FOR ADDITIONAL INFORMATION/REQUIREMENTS.
11. PROVIDE ALL REQUIRED GROUNDING PER PLANS AND SPECIFICATIONS. REFER TO ELECTRICAL DETAILS FOR ADDITIONAL INFORMATION/REQUIREMENTS.
12. PROVIDE LUG TERMINATION KITS, OR PIN ADAPTORS AS NECESSARY TO TERMINATE THE NUMBER OF SETS OF CONDUCTORS AND SIZE SHOWN/SPECIFIED.

ACCESSORIES & TRIM:

1. MOUNTING: SURFACE
2. NEMA 1 ENCLOSURE
3. DOOR-IN-DOOR COVER
4. COPPER BUS BARS
5. TOP/BOTTOM FED
6. BASIS OF DESIGN: EATON

100 AMP FRAME
100A MCB
120/240 VOLT 1ϕ, 3W+G
22KAIC RMS SYM

PANEL LPMCC
ATAD BUILDING MCC

CIRCUIT NUMBER	CIRCUIT SERVED	BREAKER AMP	BREAKER POLE	BREAKER AMP	BREAKER POLE	CIRCUIT SERVED	CIRCUIT NUMBER
1	V-910	20	1	30	1	ATAD MCP	2
3	V-911	20	1	20	1	V-811	4
5	V-912	20	1	20	1	V-812	6
7	V-913	20	1	20	1	LCS-101	8
9	V-914	20	1	20	1	LCS-201	10
11	V-915	20	1	20	1	LCS-203	12
13	V-918	20	1	20	1	LCS-401	14
15	V-702	20	1	20	1	LCS-901	16
17	V-704	20	1	20	1	LCS-902	18
19	V-705	20	1	20	1	LCS-103	20
21	LCS-503	20	1	20	1	LCS-403	22
23	LCS-700	20	1	20	1	LCS-701	24
25	LCS-601	20	1	20	1	LCS-1103	26
27	LCS-602	20	1	30	1	SPARE	28
29	THERMAER 1 INSTRUMENT CABINET #1	20	1	30	1	SPARE	30
31	THERMAER 2 INSTRUMENT CABINET #2	20	1	20	1	SPARE	32
33	SNDR INSTRUMENT CABINET #3	20	1	20	1	SPARE	34
35	HEATX INSTRUMENT CABINET #4	20	1	15	1	SPARE	36
37	BIOFILTER INSTRUMENT CABINET #5	20	1	15	1	SPARE	38
39	SPACE	-	-	-	-	SPACE	40
41	SPACE	-	-	-	-	SPACE	42

GENERAL SCHEDULE NOTES:

1. PROVIDE SPARE BREAKERS AS INDICATED.
2. PROVIDE ARC FLASH WARNING LABEL PER SPECIFICATIONS.
3. PROVIDE TYPED PANEL DIRECTORY INDICATING LOADS SERVED.
4. REFER TO ELECTRICAL PLANS FOR GENERAL LOCATIONS OF EQUIPMENT.
5. PROVIDE ALL REQUIRED MOUNTING HARDWARE, BRACKETS, ACCESSORIES, ETC...
6. CONTRACTOR TO BALANCE PROPOSED PANEL LOAD ACROSS ALL PHASES EQUALLY.
7. VERIFY ALL CIRCUIT BREAKER REQUIREMENTS WITH EQUIPMENT MANUFACTURER. PROVIDE AS REQUIRED.
8. COORDINATE FINAL LABELING REQUIREMENTS WITH THE OWNER AND PROVIDE NAMEPLATE PER SPECIFICATIONS.
9. PROVIDE TOTAL NUMBER OF 1P SPACES AS INDICATED. PROVIDE BLOCK OFF PLATES FOR ALL SPACES WHICH ARE NOT UTILIZED.
10. REFER TO ELECTRICAL SINGLE LINE DIAGRAMS, RISER DIAGRAMS, SCHEDULES & SPECIFICATIONS FOR ADDITIONAL INFORMATION/REQUIREMENTS.
11. PROVIDE ALL REQUIRED GROUNDING PER PLANS AND SPECIFICATIONS. REFER TO ELECTRICAL DETAILS FOR ADDITIONAL INFORMATION/REQUIREMENTS.
12. PROVIDE LUG TERMINATION KITS, OR PIN ADAPTORS AS NECESSARY TO TERMINATE THE NUMBER OF SETS OF CONDUCTORS AND SIZE SHOWN/SPECIFIED.

ACCESSORIES & TRIM:

1. MOUNTING: INTERNAL TO MCC
2. NEMA 1 ENCLOSURE
3. DOOR-IN-DOOR COVER
4. COPPER BUS BARS
5. TOP/BOTTOM FED
6. BASIS OF DESIGN: SAME AS MCC

400 AMP FRAME
400A MCB
480Y/277 VOLT 3ϕ, 4W+G
35KAIC RMS SYM

PANEL HVP6
MIRCROSCREEN BUILDING

CIRCUIT NUMBER	CIRCUIT SERVED	BREAKER AMP	BREAKER POLE	BREAKER AMP	BREAKER POLE	CIRCUIT SERVED	CIRCUIT NUMBER
1	MICROSCREEN CONTROL PANEL - 1	20	3	20	3	MICROSCREEN CONTROL PANEL - 2	2
3							4
5							6
7	PANEL LVP6 VIA TRANSFORMER TR6	50	3	150	3	INFLUENT PUMP #1	8
9							10
11							12
13	INFLUENT PUMP #2	150	3	150	3	INFLUENT PUMP #3	14
15							16
17							18
19	ELECTRIC UNIT HEATER EUH-517	30	3	30	3	ELECTRIC UNIT HEATER EUH-518	20
21							22
23							24
25	ELECTRIC UNIT HEATER EUH-520	30	3	100	3	SPARE	26
27							28
29							30
31	SPARE	40	2	60	3	SPARE	32
33							34
35	SPARE	20	2				36
37				30	3	SPARE	38
39	SPARE	30	1				40
41	SPARE	15	1				42
43	SPARE	20	1	15	3	SPARE	44
45	SPARE	20	1				46
47	SPARE	20	1				48
49	SPACE	-	-	-	-	SPACE	50
51	SPACE	-	-	-	-	SPACE	52
53	SPACE	-	-	-	-	SPACE	54

GENERAL SCHEDULE NOTES:

1. PROVIDE SPARE BREAKERS AS INDICATED.
2. PROVIDE ARC FLASH WARNING LABEL PER SPECIFICATIONS.
3. PROVIDE TYPED PANEL DIRECTORY INDICATING LOADS SERVED.
4. REFER TO ELECTRICAL PLANS FOR GENERAL LOCATIONS OF EQUIPMENT.
5. PROVIDE ALL REQUIRED MOUNTING HARDWARE, BRACKETS, ACCESSORIES, ETC...
6. CONTRACTOR TO BALANCE PROPOSED PANEL LOAD ACROSS ALL PHASES EQUALLY.
7. VERIFY ALL CIRCUIT BREAKER REQUIREMENTS WITH EQUIPMENT MANUFACTURER. PROVIDE AS REQUIRED.
8. COORDINATE FINAL LABELING REQUIREMENTS WITH THE OWNER AND PROVIDE NAMEPLATE PER SPECIFICATIONS.
9. PROVIDE TOTAL NUMBER OF 1P SPACES AS INDICATED. PROVIDE BLOCK OFF PLATES FOR ALL SPACES WHICH ARE NOT UTILIZED.
10. REFER TO ELECTRICAL SINGLE LINE DIAGRAMS, RISER DIAGRAMS, SCHEDULES & SPECIFICATIONS FOR ADDITIONAL INFORMATION/REQUIREMENTS.
11. PROVIDE ALL REQUIRED GROUNDING PER PLANS AND SPECIFICATIONS. REFER TO ELECTRICAL DETAILS FOR ADDITIONAL INFORMATION/REQUIREMENTS.
12. PROVIDE LUG TERMINATION KITS, OR PIN ADAPTORS AS NECESSARY TO TERMINATE THE NUMBER OF SETS OF CONDUCTORS AND SIZE SHOWN/SPECIFIED.

ACCESSORIES & TRIM:

1. MOUNTING: SURFACE
2. NEMA 1 ENCLOSURE
3. DOOR-IN-DOOR COVER
4. COPPER BUS BARS
5. INTEGRAL SPD
6. INTEGRAL KWHD
7. TOP/BOTTOM FED
8. BASIS OF DESIGN: EATON

100 AMP FRAME
100A MCB
208Y/120 VOLT 3ϕ, 4W+G
22KAIC RMS SYM

PANEL LVP6
MICROSCREEN BUILDING

CIRCUIT NUMBER	CIRCUIT SERVED	BREAKER AMP	BREAKER POLE	BREAKER AMP	BREAKER POLE	CIRCUIT SERVED	CIRCUIT NUMBER
1	RECEPTS. - EXTERIOR	20	1	20	1	RECEPTS. - INTERIOR	2
3	LIGHTS - INTERIOR	20	1	20	1	LIGHTS - EXTERIOR	4
5	RECEPTS. - INFLUENT DRY WELL	20	1	20	1	LIGHTS - INFLUENT DRY WELL	6
7	INFLUENT DRY WELL SUMP PUMP	20	1	20	1	LEVEL TRANSMITTER LIT-1	8
9	REMOTE I/O PANEL 5	30	1	20	1	LEVEL TRANSMITTER LIT-2	10
11	PUMP MONITORING SYSTEM MAS-801	20	1	20	1	LEVEL TRANSMITTER LIT-3	12
13	STATIONARY ROOF VENTILATOR SRV-500	20	1	20	1	LEVEL TRANSMITTER LIT-4	14
15	EXHAUST FAN EF-509	20	1	20	1	LOUVER W/MOTORIZED DAMPER LV-508	16
17	EXHAUST FAN EF-510	20	1	20	1	LOUVER W/MOTORIZED DAMPER LV-509	18
19	SPARE	100	3	60	3	SPARE	20
21							22
23							24
25	SPARE	30	3	15	3	SPARE	26
27							28
29							30
31	SPARE	40	2	30	1	SPARE	32
33				30	1	SPARE	34
35	SPARE	20	2	15	1	SPARE	36
37				15	1	SPARE	38
39	SPARE	20	1	20	1	SPARE	40
41	SPARE	20	1	20	1	SPARE	42
43	SPACE	-	-	-	-	SPACE	44
45	SPACE	-	-	-	-	SPACE	46
47	SPACE	-	-	-	-	SPACE	48
49	SPACE	-	-	-	-	SPACE	50
51	SPACE	-	-	-	-	SPACE	52
53	SPACE	-	-	-	-	SPACE	54

GENERAL SCHEDULE NOTES:

1. PROVIDE SPARE BREAKERS AS INDICATED.
2. PROVIDE ARC FLASH WARNING LABEL PER SPECIFICATIONS.
3. PROVIDE TYPED PANEL DIRECTORY INDICATING LOADS SERVED.
4. REFER TO ELECTRICAL PLANS FOR GENERAL LOCATIONS OF EQUIPMENT.
5. PROVIDE ALL REQUIRED MOUNTING HARDWARE, BRACKETS, ACCESSORIES, ETC...
6. CONTRACTOR TO BALANCE PROPOSED PANEL LOAD ACROSS ALL PHASES EQUALLY.
7. VERIFY ALL CIRCUIT BREAKER REQUIREMENTS WITH EQUIPMENT MANUFACTURER. PROVIDE AS REQUIRED.
8. COORDINATE FINAL LABELING REQUIREMENTS WITH THE OWNER AND PROVIDE NAMEPLATE PER SPECIFICATIONS.
9. PROVIDE TOTAL NUMBER OF 1P SPACES AS INDICATED. PROVIDE BLOCK OFF PLATES FOR ALL SPACES WHICH ARE NOT UTILIZED.
10. REFER TO ELECTRICAL SINGLE LINE DIAGRAMS, RISER DIAGRAMS, SCHEDULES & SPECIFICATIONS FOR ADDITIONAL INFORMATION/REQUIREMENTS.
11. PROVIDE ALL REQUIRED GROUNDING PER PLANS AND SPECIFICATIONS. REFER TO ELECTRICAL DETAILS FOR ADDITIONAL INFORMATION/REQUIREMENTS.
12. PROVIDE LUG TERMINATION KITS, OR PIN ADAPTORS AS NECESSARY TO TERMINATE THE NUMBER OF SETS OF CONDUCTORS AND SIZE SHOWN/SPECIFIED.

ACCESSORIES & TRIM:

1. MOUNTING: SURFACE
2. NEMA 1 ENCLOSURE
3. DOOR-IN-DOOR COVER
4. COPPER BUS BARS
5. TOP/BOTTOM FED
6. BASIS OF DESIGN: EATON

225 AMP FRAME
225A MCB
120/240 VOLT 3ϕ, 4W+G
22KAIC RMS SYM

PANEL BP-LVP
DEWATERING BUILDING

CIRCUIT NUMBER	CIRCUIT SERVED	BREAKER AMP	BREAKER POLE	BREAKER AMP	BREAKER POLE	CIRCUIT SERVED	CIRCUIT NUMBER
1	BELT PRESS CONTROL PANEL #1	100	3	100	3	BELT PRESS CONTROL PANEL #2	2
3							4
5							6
7	WINCH #1	30	3	30	3	WINCH #2	8
9							10
11							12
13	CONVEYOR CONTROL PANEL	100	3	100	3	SPARE	14
15							16
17							18
19	SPARE	15	3	60	3	SPARE	20
21							22
23							24
25	SPARE	40	2	30	3	SPARE	26
27							28
29	SPARE	20	2				30
31				20	1	SPARE	32
33	SPARE	30	1	20	1	SPARE	34
35	SPARE	15	1	20	1	SPARE	36
37	SPACE	-	-	-	-	SPACE	38
39	SPACE	-	-	-	-	SPACE	40
41	SPACE	-	-	-	-	SPACE	42
43	SPACE	-	-	-	-	SPACE	44
45	SPACE	-	-	-	-	SPACE	46
47	SPACE	-	-	-	-	SPACE	48
49	SPACE	-	-	-	-	SPACE	50
51	SPACE	-	-	-	-	SPACE	52
53	SPACE	-	-	-	-	SPACE	54

GENERAL SCHEDULE NOTES:

1. PROVIDE SPARE BREAKERS AS INDICATED.
2. PROVIDE ARC FLASH WARNING LABEL PER SPECIFICATIONS.
3. PROVIDE TYPED PANEL DIRECTORY INDICATING LOADS SERVED.
4. REFER TO ELECTRICAL PLANS FOR GENERAL LOCATIONS OF EQUIPMENT.
5. PROVIDE ALL REQUIRED MOUNTING HARDWARE, BRACKETS, ACCESSORIES, ETC...
6. CONTRACTOR TO BALANCE PROPOSED PANEL LOAD ACROSS ALL PHASES EQUALLY.
7. VERIFY ALL CIRCUIT BREAKER REQUIREMENTS WITH EQUIPMENT MANUFACTURER. PROVIDE AS REQUIRED.
8. COORDINATE FINAL LABELING REQUIREMENTS WITH THE OWNER AND PROVIDE NAMEPLATE PER SPECIFICATIONS.
9. PROVIDE TOTAL NUMBER OF 1P SPACES AS INDICATED. PROVIDE BLOCK OFF PLATES FOR ALL SPACES WHICH ARE NOT UTILIZED.
10. REFER TO ELECTRICAL SINGLE LINE DIAGRAMS, RISER DIAGRAMS, SCHEDULES & SPECIFICATIONS FOR ADDITIONAL INFORMATION/REQUIREMENTS.
11. PROVIDE ALL REQUIRED GROUNDING PER PLANS AND SPECIFICATIONS. REFER TO ELECTRICAL DETAILS FOR ADDITIONAL INFORMATION/REQUIREMENTS.
12. PROVIDE LUG TERMINATION KITS, OR PIN ADAPTORS AS NECESSARY TO TERMINATE THE NUMBER OF SETS OF CONDUCTORS AND SIZE SHOWN/SPECIFIED.

ACCESSORIES & TRIM:

1. MOUNTING: SURFACE
2. NEMA 1 ENCLOSURE
3. DOOR-IN-DOOR COVER
4. COPPER BUS BARS
5. TOP/BOTTOM FED
6. BASIS OF DESIGN: EATON

MHE ENGINEERING
33 Airport Center Drive, Suite 202
New Windsor, NY 12553
(845) 567-3100
111 Wheatfield Drive, Suite 1
Milford, PA 18337
(570) 296-2765

BID ADDENDUM

JADE STONE ENGINEERING

STATE OF NEW YORK
JEFFREY E ROBINSON
LICENSED PROFESSIONAL ENGINEER
095896

HAZARDOUS MATERIAL NOTE:

THE SERVICES PROVIDED BY MHE, INCLUDING ALL WORK DEPICTED ON MHE PLANS, DO NOT INCLUDE SERVICES RELATED TO THE IDENTIFICATION, CONTROLS OR HANDLING OF HAZARDOUS MATERIALS, INCLUDING SUCH MATERIALS AS ASBESTOS AND LEAD PAINT. ALL TESTING, IDENTIFICATION, ABATEMENT, CONTROLS, AND HANDLING OF HAZARDOUS MATERIALS SHALL BE UNDERTAKEN BY A HAZARDOUS MATERIAL CONSULTANT AND CERTIFIED PROFESSIONALS. IF SUCH MATERIALS HAVE BEEN IDENTIFIED, CONTRACTOR WILL COMMUNICATE DIRECTLY WITH HAZARDOUS MATERIAL PROFESSIONAL FOR THE PERFORMANCE OF ANY WORK ON OR ADJACENT TO SAID MATERIALS. IF UNIDENTIFIED MATERIALS OF CONCERN ARE ENCOUNTERED WHILE UNDERTAKING THE WORK SHOWN HEREON, CONTRACTOR SHALL IMMEDIATELY NOTIFY ENGINEER AND OWNER, AND SHALL OBTAIN DIRECTION FROM THE HAZARDOUS MATERIAL CONSULTANT PRIOR TO THE CONTINUATION OF WORK INVOLVING SUSPECTED MATERIAL.

UDIG·NY
SAFE DIGGING STARTS HERE
CALL 811

UNAUTHORIZED ADDITION OR ALTERATION OF THIS PLAN IS A VIOLATION OF SECTION 7209(2) OF THE NEW YORK STATE EDUCATION LAW.

ALL PRODUCTION & INTELLECTUAL PROPERTY RIGHT RESERVED ©

CAESARS LANE WWTP EXPANSION PROJECT: PHASE 2
145 CAESARS LN.
NEW WINDSOR, NY 12553

FOR TOWN OF NEW WINDSOR
555 UNION AVE.
NEW WINDSOR, NY 12553

ELECTRICAL SCHEDULES

REVISIONS

NO.	DESCRIPTION	DATE

ISSUED DATE: 06 JUNE, 2025
DESIGN BY: RRM
DRAWN BY: CDJ
CHECKED BY: MGR
REVIEWED BY: JER
SHEET NO.

E-043

PROJECT # 18-732 PHASE #

PANEL HVP7 GARAGE

225 AMP FRAME
225A MCB
480Y/277 VOLT 3ϕ, 4W+G
35KAIC RMS SYM

CIRCUIT NUMBER	CIRCUIT SERVED	BREAKER AMP	BREAKER POLE	BREAKER AMP	BREAKER POLE	CIRCUIT SERVED	CIRCUIT NUMBER
1	PANEL LVP7 VIA TRANSFORMER TR7	50	3	30	3	ELECTRIC UNIT HEATER EUH-950	2
3							4
5							6
7	AIR COMPRESSOR	20	3	30	3	ELECTRIC UNIT HEATER EUH-951	8
9							10
11							12
13	HOIST	20	3	100	3	SPARE	14
15							16
17							18
19	SPARE	40	2	60	3	SPARE	20
21							22
23	SPARE	20	2				24
25				30	3	SPARE	26
27	SPARE	30	1				28
29	SPARE	15	1				30
31	SPARE	20	1	15	3	SPARE	32
33	SPARE	20	1				34
35	SPARE	20	1				36
37	SPACE	-	-	-	-	SPACE	38
39	SPACE	-	-	-	-	SPACE	40
41	SPACE	-	-	-	-	SPACE	42

GENERAL SCHEDULE NOTES:

1. PROVIDE SPARE BREAKERS AS INDICATED.
2. PROVIDE ARC FLASH WARNING LABEL PER SPECIFICATIONS.
3. PROVIDE TYPED PANEL DIRECTORY INDICATING LOADS SERVED.
4. REFER TO ELECTRICAL PLANS FOR GENERAL LOCATIONS OF EQUIPMENT.
5. PROVIDE ALL REQUIRED MOUNTING HARDWARE, BRACKETS, ACCESSORIES, ETC...
6. CONTRACTOR TO BALANCE PROPOSED PANEL LOAD ACROSS ALL PHASES EQUALLY.
7. VERIFY ALL CIRCUIT BREAKER REQUIREMENTS WITH EQUIPMENT MANUFACTURER. PROVIDE AS REQUIRED.
8. COORDINATE FINAL LABELING REQUIREMENTS WITH THE OWNER AND PROVIDE NAMEPLATE PER SPECIFICATIONS.
9. PROVIDE TOTAL NUMBER OF 1P SPACES AS INDICATED. PROVIDE BLOCK OFF PLATES FOR ALL SPACES WHICH ARE NOT UTILIZED.
10. REFER TO ELECTRICAL SINGLE LINE DIAGRAMS, RISER DIAGRAMS, SCHEDULES & SPECIFICATIONS FOR ADDITIONAL INFORMATION/REQUIREMENTS.
11. PROVIDE ALL REQUIRED GROUNDING PER PLANS AND SPECIFICATIONS. REFER TO ELECTRICAL DETAILS FOR ADDITIONAL INFORMATION/REQUIREMENTS.
12. PROVIDE LUG TERMINATION KITS, OR PIN ADAPTORS AS NECESSARY TO TERMINATE THE NUMBER OF SETS OF CONDUCTORS AND SIZE SHOWN/SPECIFIED.

ACCESSORIES & TRIM:

1. MOUNTING: SURFACE
2. NEMA 1 ENCLOSURE
3. DOOR-IN-DOOR COVER
4. COPPER BUS BARS
5. INTEGRAL SPD
6. INTEGRAL KWHD
7. TOP/BOTTOM FED
8. BASIS OF DESIGN: EATON

PANEL LVP7 GARAGE

100 AMP FRAME
100A MCB
208Y/120 VOLT 3ϕ, 4W+G
22KAIC RMS SYM

CIRCUIT NUMBER	CIRCUIT SERVED	BREAKER AMP	BREAKER POLE	BREAKER AMP	BREAKER POLE	CIRCUIT SERVED	CIRCUIT NUMBER
1	LIGHTS - INTERIOR	20	1	20	1	RECEPTS. - NORTH INTERIOR	2
3	LIGHTS - EXTERIOR	20	1	20	1	RECEPTS. - SOUTH INTERIOR	4
5	OVERHEAD DOOR	20	1	20	1	RECEPTACLES - EXTERIOR	6
7	OVERHEAD DOOR	20	1	20	1	OVERHEAD DOOR	8
9	DATA RACK	20	1	20	1	SECURITY CONTROL PANEL	10
11	ELECTRIC WATER HEATER	20	1	20	1	FIRE ALARM CONTROL PANEL	12
13	EXHAUST FAN	20	1	20	1	LOUVER W/MOTORIZED DAMPER	14
15	WELDER RECEPTACLE	50	2	50	2	WELDER RECEPTACLE	16
17							18
19	AIR COMPRESSOR	60	2	30	2	LATHE MILLING MACHINE	20
21							22
23	SAND BLASTER	20	1	100	3	SPARE	24
25	HOIST	40	3				26
27							28
29				60	3	SPARE	30
31	SPARE	40	2				32
33							34
35	SPARE	20	2	30	3	SPARE	36
37							38
39	SPARE	30	1				40
41	SPARE	30	1	15	3	SPARE	42
43	SPARE	20	1				44
45	SPARE	20	1				46
47	SPARE	15	1	15	1	SPARE	48
49	SPACE	-	-	–	–	SPACE	50
51	SPACE	-	-	–	–	SPACE	52
53	SPACE	-	-	–	–	SPACE	54

GENERAL SCHEDULE NOTES:

1. PROVIDE SPARE BREAKERS AS INDICATED.
2. PROVIDE ARC FLASH WARNING LABEL PER SPECIFICATIONS.
3. PROVIDE TYPED PANEL DIRECTORY INDICATING LOADS SERVED.
4. REFER TO ELECTRICAL PLANS FOR GENERAL LOCATIONS OF EQUIPMENT.
5. PROVIDE ALL REQUIRED MOUNTING HARDWARE, BRACKETS, ACCESSORIES, ETC...
6. CONTRACTOR TO BALANCE PROPOSED PANEL LOAD ACROSS ALL PHASES EQUALLY.
7. VERIFY ALL CIRCUIT BREAKER REQUIREMENTS WITH EQUIPMENT MANUFACTURER. PROVIDE AS REQUIRED.
8. COORDINATE FINAL LABELING REQUIREMENTS WITH THE OWNER AND PROVIDE NAMEPLATE PER SPECIFICATIONS.
9. PROVIDE TOTAL NUMBER OF 1P SPACES AS INDICATED. PROVIDE BLOCK OFF PLATES FOR ALL SPACES WHICH ARE NOT UTILIZED.
10. REFER TO ELECTRICAL SINGLE LINE DIAGRAMS, RISER DIAGRAMS, SCHEDULES & SPECIFICATIONS FOR ADDITIONAL INFORMATION/REQUIREMENTS.
11. PROVIDE ALL REQUIRED GROUNDING PER PLANS AND SPECIFICATIONS. REFER TO ELECTRICAL DETAILS FOR ADDITIONAL INFORMATION/REQUIREMENTS.
12. PROVIDE LUG TERMINATION KITS, OR PIN ADAPTORS AS NECESSARY TO TERMINATE THE NUMBER OF SETS OF CONDUCTORS AND SIZE SHOWN/SPECIFIED.

ACCESSORIES & TRIM:

1. MOUNTING: SURFACE
2. NEMA 1 ENCLOSURE
3. DOOR-IN-DOOR COVER
4. COPPER BUS BARS
5. TOP/BOTTOM FED
6. BASIS OF DESIGN: EATON

PANEL LVP3 HEADWORKS BUILDING

225 AMP FRAME
225A MCB
208Y/120 VOLT 3ϕ, 4W+G
22KAIC RMS SYM

CIRCUIT NUMBER	CIRCUIT SERVED	BREAKER AMP	BREAKER POLE	BREAKER AMP	BREAKER POLE	CIRCUIT SERVED	CIRCUIT NUMBER
1	LIGHTS - INTERIOR	20	1	20	1	LIGHTS - EXTERIOR	2
3	RECEPTS. - ELECTRICAL ROOM	20	1	20	1	RECEPTS. - INFLUENT ROOM	4
5	RECEPTS. - EXTERIOR	20	1	30	1	REMOTE I/O PANEL	6
7	FLOW METER TRANSMITTER FMT-200	20	1	30	1	GAS DETECTION SYSTEM	8
9	EXHAUST FAN EF-200	20	1	30	1	VACUUM PRIME CONTROL PANEL	10
11	EXHAUST FAN EF-201	20	1	30	1	VACUUM PRIME CONTROL PANEL	12
13	SUPPLY FAN SF-200	20	1	20	1	SECURITY PANEL	14
15	LOUVER W/MOTORIZED DAMPER LV-200	20	1	20	1	DATA RACK	16
17	LOUVER W/MOTORIZED DAMPER LV-201	20	1	20	1	COMBIN. CARBON MONOXIDE/SMOKE DETECTOR	18
19	LOUVER W/MOTORIZED DAMPER LV-202	20	1	20	1	DOWNSTREAM ULTRASONIC LEVEL TRANSMITTER	20
21	LOUVER W/MOTORIZED DAMPER LV-203	20	1	20	1	UPSTREAM ULTRASONIC LEVEL TRANSMITTER	22
23	HEAT TRACE SYSTEM	30	2	30	2	HEAT TRACE SYSTEM	24
25							26
27	SPARE	100	3	60	3	SPARE	28
29							30
31							32
33	SPARE	30	3	15	3	SPARE	34
35							36
37							38
39	SPARE	40	2	20	2	SPARE	40
41							42
43	SPARE	30	1	–	–	SPACE	44
45	SPARE	30	1	–	–	SPACE	46
47	SPARE	20	1	–	–	SPACE	48
49	SPARE	20	1	200	3	INFLUENT STRUCTURE DISTRIBUTION PANEL	50
51	SPARE	15	1			SUB-FEED CIRCUIT BREAKER	52
53	SPARE	15	1				54

GENERAL SCHEDULE NOTES:

1. PROVIDE SPARE BREAKERS AS INDICATED.
2. PROVIDE ARC FLASH WARNING LABEL PER SPECIFICATIONS.
3. PROVIDE TYPED PANEL DIRECTORY INDICATING LOADS SERVED.
4. REFER TO ELECTRICAL PLANS FOR GENERAL LOCATIONS OF EQUIPMENT.
5. PROVIDE ALL REQUIRED MOUNTING HARDWARE, BRACKETS, ACCESSORIES, ETC...
6. CONTRACTOR TO BALANCE PROPOSED PANEL LOAD ACROSS ALL PHASES EQUALLY.
7. VERIFY ALL CIRCUIT BREAKER REQUIREMENTS WITH EQUIPMENT MANUFACTURER. PROVIDE AS REQUIRED.
8. COORDINATE FINAL LABELING REQUIREMENTS WITH THE OWNER AND PROVIDE NAMEPLATE PER SPECIFICATIONS.
9. PROVIDE TOTAL NUMBER OF 1P SPACES AS INDICATED. PROVIDE BLOCK OFF PLATES FOR ALL SPACES WHICH ARE NOT UTILIZED.
10. REFER TO ELECTRICAL SINGLE LINE DIAGRAMS, RISER DIAGRAMS, SCHEDULES & SPECIFICATIONS FOR ADDITIONAL INFORMATION/REQUIREMENTS.
11. PROVIDE ALL REQUIRED GROUNDING PER PLANS AND SPECIFICATIONS. REFER TO ELECTRICAL DETAILS FOR ADDITIONAL INFORMATION/REQUIREMENTS.
12. PROVIDE LUG TERMINATION KITS, OR PIN ADAPTORS AS NECESSARY TO TERMINATE THE NUMBER OF SETS OF CONDUCTORS AND SIZE SHOWN/SPECIFIED.

ACCESSORIES & TRIM:

1. MOUNTING: SURFACE
2. NEMA 1 ENCLOSURE
3. DOOR-IN-DOOR COVER
4. COPPER BUS BARS
5. TOP/BOTTOM FED
6. BASIS OF DESIGN: EATON

PANEL HVP8 DISINFECTION BUILDING

400 AMP FRAME
400A MCB
480Y/277 VOLT 3ϕ, 4W+G
35KAIC RMS SYM

CIRCUIT NUMBER	CIRCUIT SERVED	BREAKER AMP	BREAKER POLE	BREAKER AMP	BREAKER POLE	CIRCUIT SERVED	CIRCUIT NUMBER
1	PLANT WATER CONTROL PANEL	175	3	70	3	POWER PANEL PP-1 VIA TRANSFORMER TR8	2
3							4
5							6
7	BLOWER #1	50	3	50	3	BLOWER #2	8
9							10
11							12
13	BACKPULSE PUMP #1	150	3	150	3	BACKPULSE PUMP #2	14
15							16
17							18
19	SPARE	100	3	60	3	SPARE	20
21							22
23							24
25	SPARE	30	3	15	3	SPARE	26
27							28
29							30
31	SPARE	40	2	20	1	SPARE	32
33				20	1	SPARE	34
35	SPARE	20	2	20	1	SPARE	36
37				–	–	SPACE	38
39	SPARE	30	1	–	–	SPACE	40
41	SPARE	15	1	–	–	SPACE	42

GENERAL SCHEDULE NOTES:

1. PROVIDE SPARE BREAKERS AS INDICATED.
2. PROVIDE ARC FLASH WARNING LABEL PER SPECIFICATIONS.
3. PROVIDE TYPED PANEL DIRECTORY INDICATING LOADS SERVED.
4. REFER TO ELECTRICAL PLANS FOR GENERAL LOCATIONS OF EQUIPMENT.
5. PROVIDE ALL REQUIRED MOUNTING HARDWARE, BRACKETS, ACCESSORIES, ETC...
6. CONTRACTOR TO BALANCE PROPOSED PANEL LOAD ACROSS ALL PHASES EQUALLY.
7. VERIFY ALL CIRCUIT BREAKER REQUIREMENTS WITH EQUIPMENT MANUFACTURER. PROVIDE AS REQUIRED.
8. COORDINATE FINAL LABELING REQUIREMENTS WITH THE OWNER AND PROVIDE NAMEPLATE PER SPECIFICATIONS.
9. PROVIDE TOTAL NUMBER OF 1P SPACES AS INDICATED. PROVIDE BLOCK OFF PLATES FOR ALL SPACES WHICH ARE NOT UTILIZED.
10. REFER TO ELECTRICAL SINGLE LINE DIAGRAMS, RISER DIAGRAMS, SCHEDULES & SPECIFICATIONS FOR ADDITIONAL INFORMATION/REQUIREMENTS.
11. PROVIDE ALL REQUIRED GROUNDING PER PLANS AND SPECIFICATIONS. REFER TO ELECTRICAL DETAILS FOR ADDITIONAL INFORMATION/REQUIREMENTS.
12. PROVIDE LUG TERMINATION KITS, OR PIN ADAPTORS AS NECESSARY TO TERMINATE THE NUMBER OF SETS OF CONDUCTORS AND SIZE SHOWN/SPECIFIED.

ACCESSORIES & TRIM:

1. MOUNTING: SURFACE
2. NEMA 1 ENCLOSURE
3. DOOR-IN-DOOR COVER
4. COPPER BUS BARS
5. INTEGRAL SPD
6. INTEGRAL KWHD
7. TOP/BOTTOM FED
8. BASIS OF DESIGN: EATON

RACEWAY SCHEDULE

AREA	CABLING/RACEWAY METHOD	REMARKS
EXTERIOR EXPOSED	RGS	SEE NOTES BELOW
RISERS FROM UNDERGROUND	RGS	SEE NOTES BELOW
UNDERGROUND 90 DEGREE SWEEPS	RGS	SEE NOTES BELOW
UNDERGROUND (SAND FILL DUCT BANK)	PVC #80	SEE NOTES BELOW
UNDERGROUND (REINFORCED CONCRETE DUCT BANK)	PVC #40	SEE NOTES BELOW
IN SLAB	PVC #40	SEE NOTES BELOW
CLASSIFIED AREAS	PVC COATED RGS	SEE NOTES BELOW
CORROSIVE AREAS	PVC COATED RGS	SEE NOTES BELOW
FORCEMAIN DISCHARGE CHAMBER - INTERIOR	PVC COATED RGS	SEE NOTES BELOW
FLOW CONTROL BUILDING - INTERIOR	RGS	SEE NOTES BELOW
INFLUENT BUILDING - ELECTRICAL ROOM	RGS	SEE NOTES BELOW
INFLUENT BUILDING - PUMP ROOM	RGS	SEE NOTES BELOW
INFLUENT BUILDING - INFLUENT ROOM	PVC COATED RGS	SEE NOTES BELOW
INFLUENT BUILDING - WET WELL	PVC COATED RGS	SEE NOTES BELOW
INFLUENT BUILDING - FOG VAULT	PVC COATED RGS	SEE NOTES BELOW
SBR - PRE-REACT BASINS	PVC COATED RGS	SEE NOTES BELOW
SBR - AERATION BASINS	PVC COATED RGS	SEE NOTES BELOW
AEROBIC DIGESTERS - INTERIOR	PVC COATED RGS	SEE NOTES BELOW
SLUDGE HOLDING TANK - INTERIOR	PVC COATED RGS	SEE NOTES BELOW
FOUNDATION DRAIN PUMP STATION - INTERIOR	PVC COATED RGS	SEE NOTES BELOW
METERING MANHOLE - INTERIOR	RGS	SEE NOTES BELOW
POST AERATION TANK - INTERIOR	RGS	SEE NOTES BELOW
PROCESS BUILDING - CHEMICAL ROOM	PVC COATED RGS	SEE NOTES BELOW
PROCESS BUILDING - FILTER / UV ROOM	RGS	SEE NOTES BELOW
PROCESS BUILDING - BLOWER ROOM	RGS	SEE NOTES BELOW
PROCESS BUILDING - ELECTRICAL & RPZ ROOM	RGS	SEE NOTES BELOW
PROCESS BUILDING - LAB, OFFICE, LOCKERS, & BATHROOM	EMT	SEE NOTES BELOW
PROCESS BUILDING - BASEMENT	RGS	SEE NOTES BELOW
SOLIDS HANDLING FACILITY - CONT, ELECT, & BATHROOM	RGS	SEE NOTES BELOW
SOLIDS HANDLING FACILITY - BELT PRESS ROOM	RGS	SEE NOTES BELOW
SOLIDS HANDLING FACILITY - DRYER AREA (FUTURE)	RGS	SEE NOTES BELOW
SOLIDS HANDLING FACILITY - BIOSOLIDS STORAGE AREA	RGS	SEE NOTES BELOW
SEPTAGE RECEIVING STATION - WET WELL	PVC COATED RGS	SEE NOTES BELOW
SEPTAGE RECEIVING STATION - DRY WELL	PVC COATED RGS	SEE NOTES BELOW
SEPTAGE RECEIVING STATION - BASEMENT / PUMP ROOM	RGS	SEE NOTES BELOW
SEPTAGE RECEIVING STATION - SHOP AREA	RGS	SEE NOTES BELOW
UNPROTECTED SERVICE CONDUCTORS - WITHIN A BUILDING	RGS	SEE NOTES BELOW

GENERAL CONDUIT SCHEDULE NOTES:

1. FITTINGS:
   - RGS: THREADED
   - PVC: BELL OR GLUE
   - EMT : SET SCREW TYPE
2. ALL CIRCUITS SHALL CONTAIN DEDICATED NEUTRALS (NO MULTI-WIRE CIRCUITS PERMITTED)
3. CONDUIT SHALL NOT BE UTILIZED FOR EFFECTIVE GROUND FAULT RETURN PATH - ALL CIRCUITS SHALL CONTAIN DEDICATED GREEN INSULATED CONDUCTOR, SIZED PER DRAWINGS, OR IN ACCORDANCE WITH APPLICABLE NEC CRITERIA.
4. ALL RACEWAY TYPES ARE UNLESS OTHERWISE NOTED ON THE DRAWINGS.
5. PVC COATED RGS CONDUIT AND ASSOCIATED COMPONENTS TO BE BY PLASTI-BOND OR APPROVED EQUAL. WHEN USING PVC COATED RGS CONDUIT CONTRACTOR TO USE A CORROSION RESISTANT PRODUCT LINE AS MANUFACTURED BY POWER-STRUT DEFENDER OR APPROVED EQUAL FOR ALL ASSOCIATED CHANNEL, FITTINGS, AND CONDUIT CLAMPS/SUPPORTS.
6. "UNPROTECTED SERVICE CONDUCTORS - WITHIN A BUILDING" REFERS TO BUILDING SERVICE/FEEDER CONDUCTORS BETWEEN THE POINT THEY ENTER THE BUILDING UNTIL THE POINT AT WHICH THEY REACH THE FIRST DISCONNECTING DEVICE WITHIN THAT BUILDING.
7. CONTRACTOR TO PROVIDE TRANSITION FITTINGS TO SWITCH BETWEEN RACEWAY TYPES AS REQUIRED.

TRANSFORMER SCHEDULE

DESIGNATION	LOCATION	RATING	TYPE	VOLTAGE PRIMARY	VOLTAGE SECONDARY	TAPS	DEGREE C TEMPERATURE RISE	NEMA ENCLOSURE	REMARKS
TR1	MBR BLDG	112.5KVA	DRY-TYPE	480V Δ, 3Ø	208Y/120V, 3Ø	4 AT -2.5% FCBN 2 AT +2.5% FCAN	115	1	-
TR2 (E.T.R.)	CONTROL BLDG	75KVA	DRY-TYPE	480V Δ, 3Ø	208Y/120V, 3Ø	4 AT -2.5% FCBN 2 AT +2.5% FCAN	115	1	-
TR3	HEADWORKS BLDG	75KVA	DRY-TYPE	480V Δ, 3Ø	208Y/120V, 3Ø	4 AT -2.5% FCBN 2 AT +2.5% FCAN	115	1	-
CS-CP-1-TR	HEADWORKS BLDG	15KVA	DRY-TYPE	480V Δ, 3Ø	120/240V, 3Ø	4 AT -2.5% FCBN 2 AT +2.5% FCAN	115	1	-
TR4	DEWATERING BLDG	75KVA	DRY-TYPE	480V Δ, 3Ø	208Y/120V, 3Ø	4 AT -2.5% FCBN 2 AT +2.5% FCAN	115	1	-
BP-TR	DEWATERING BLDG	75KVA	DRY-TYPE	480V Δ, 3Ø	120/240V, 3Ø	4 AT -2.5% FCBN 2 AT +2.5% FCAN	115	1	-
TR5	ATAD BLDG	30KVA	DRY-TYPE	480V Δ, 3Ø	208Y/120V, 3Ø	4 AT -2.5% FCBN 2 AT +2.5% FCAN	115	1	-
TR-MCC	ATAD MCC2	30KVA	DRY-TYPE	480V Δ, 3Ø	208Y/120V, 3Ø	4 AT -2.5% FCBN 2 AT +2.5% FCAN	115	1	-
TR6	MICROSCREEN BLDG	30KVA	DRY-TYPE	480V Δ, 3Ø	208Y/120V, 3Ø	4 AT -2.5% FCBN 2 AT +2.5% FCAN	115	1	-
TR7	GARAGE	30KVA	DRY-TYPE	480V Δ, 3Ø	208Y/120V, 3Ø	4 AT -2.5% FCBN 2 AT +2.5% FCAN	115	1	-
TR8	DISINFECTION BLDG	45KVA	DRY-TYPE	480V Δ, 3Ø	208Y/120V, 3Ø	4 AT -2.5% FCBN 2 AT +2.5% FCAN	115	1	-

GENERAL SCHEDULE NOTES:
1. REFER TO SPECIFICATIONS FOR ADDITIONAL INFORMATION/REQUIREMENTS.
2. PROVIDE 4" CONCRETE HOUSEKEEPING PAD AND ALL REQUIRED ANCHORING EQUIPMENT, MOUNTING HARDWARE, BRACKETS, ACCESSORIES, ETC... FOR EACH TRANSFORMER. REFER TO ELECTRICAL DETAILS FOR ADDITIONAL INFORMATION/REQUIREMENTS.
3. TRANSFORMERS TO BE PROVIDED WITH COPPER WINDINGS.
4. TRANSFORMERS TO MEET MINIMUM ENERGY EFFICIENCY STANDARDS SET FORTH IN 10 CFR PART 431 (DOE 2016).
5. TRANSFORMERS TO BE INSTALLED A MINIMUM OF 4" OFF WALL(S) TO ALLOW FOR VENTILATION. FINAL REQUIREMENTS TO BE COORDINATED WITH EQUIPMENT MANUFACTURERS RECOMMENDATIONS.

TRANSFER SWITCH SCHEDULE

DESIGNATION	LOCATION	TRANSFER TYPE	VOLTAGE	AMPERAGE	MAIN INPUT BREAKER	POLE	KAIC	NEUTRAL	NEMA ENCLOSURE	REMARKS
ATS	MBR BLDG	AUTOMATIC	480V, 3Ø, 4W	3,000A	N/A	3	65	SOLID	1	-

GENERAL SCHEDULE NOTES:
1. SWITCH TO HAVE A SOLID GROUND BAR.
2. REFER TO SINGLE LINE DIAGRAM FOR ADDITIONAL INFORMATION/REQUIREMENTS.
3. TRANSFER SWITCH TO BE RATED AT MINIMUM 65KAIC.
4. TRANSFER SWITCH TO BE OF THE OPEN TRANSITION TYPE.
5. ATS TO BE PROVIDED WITH PROGRAMMABLE EXERCISER CLOCK.

EXISTING DISTRIBUTION PANEL PP1

LOAD	CONDUCTORS	C.B.	C.B.	CONDUCTORS	LOAD
EF-1	(2) #12 THHN COPPER & (1) #12 GRND.	20	20	(2) #12 THHN COPPER & (1) #12 GRND.	RECEPTACLES
EUH-1	(2) #12 THHN COPPER & (1) #12 GRND.	20	20	(2) #12 THHN COPPER & (1) #12 GRND.	RECEPTACLES
			20	(2) #12 THHN COPPER & (1) #12 GRND.	FEED PUMP RECEPTS.
WH-1	(3) #2 THHN COPPER & (1) #8 GRND.	90	20	(2) #12 THHN COPPER & (1) #12 GRND.	FLOW METER
			20	(2) #12 THHN COPPER & (1) #12 GRND.	INTERIOR LIGHTING
			20	(2) #12 THHN COPPER & (1) #12 GRND.	MOTORIZED ACTUATOR
20-LIT-602	(2)#10 & #10G, 1"C.	20	20	(2) #12 THHN COPPER & (1) #12 GRND.	EXTERIOR LIGHTING
PUMP CONTROL PANEL	(2) #12 THHN COPPER & (1) #12 GRND.	20	20	(2) #12 THHN COPPER & (1) #12 GRND.	CL ANALYZER
SUBMERSIBLE PUMP	(2) #10 THHN COPPER & (1) #10 GRND.	20	20	(2) #10 THHN COPPER & (1) #10 GRND.	SUBMERSIBLE PUMP
SUBMERSIBLE PUMP	(2) #10 THHN COPPER & (1) #10 GRND.	20	30	(2) #10 THHN COPPER & (1) #10 GRND.	EFFLUENT PUMP
ACC-1 / AC-1	(2) #12 THHN COPPER & (1) #12 GRND.	20	20	(2) #12 THHN COPPER & (1) #12 GRND.	TANK RECEPTACLES
			20	(2)#10 & #10G, 1"C.	DOA-01
UTT-04	(2)#10 & #10G, 1"C.	20	20	(2)#10 & #10G, 1"C.	DOA-02
BLOWER PLATFORM LIGHTS & RECEPTS	(2)#10 & #10G, 1"C.	20	20	(2)#10 & #10G, 1"C.	UTT-02
BACKPULSE PUMP STATION RECEPTS.	(2)#10 & #10G, 1"C.	20	20	(2)#10 & #10G, 1"C.	UTT-03

GENERAL SCHEDULE NOTES:

CONTRACTOR TO UTILIZE SPARE CIRCUIT BREAKERS WITHIN EXISTING PANEL TO SERVE PROPOSED EQUIPMENT AS SHOWN / INDICATED. UPDATE PANELBOARD'S CIRCUIT DIRECTORY. TYPICAL OF ALL PROPOSED LOADS SERVED FROM EXISTING PANEL.

BRANCH CIRCUIT SCHEDULE

CIRCUIT BREAKER	PHASE CONDUCTORS AND/OR NEUTRAL CONDUCTORS	GROUND CONDUCTOR	CONDUIT
3 POLE CIRCUITS			
50/3	(3)#6	#10	1-1/2" CONDUIT
40/3	(3)#8	#10	1" CONDUIT
30/3	(3)#10	#10	3/4" CONDUIT
20/3	(3)#12	#12	3/4" CONDUIT
15/3	(3)#12	#12	3/4" CONDUIT
2 POLE CIRCUITS			
50/2	(2)#6	#10	1-1/4" CONDUIT
40/2	(2)#8	#10	1" CONDUIT
30/2	(2)#10	#10	3/4" CONDUIT
20/2	(2)#12	#12	3/4" CONDUIT
15/2	(2)#12	#12	3/4" CONDUIT
1 POLE CIRCUITS			
50/1	(2)#6	#10	1-1/4" CONDUIT
40/1	(2)#8	#10	1" CONDUIT
30/1	(2)#10	#10	3/4" CONDUIT
20/1	(2)#12	#12	3/4" CONDUIT
15/1	(2)#12	#12	3/4" CONDUIT

NOTES REGARDING THE USE OF THIS SCHEDULE:

1. USE THIS SCHEDULE FOR:
   - ALL RECEPTACLE AND LIGHTING CIRCUITS.
   - WHERE SPECIFIC CONDUCTOR/CONDUIT SIZING IS NOT INDICATED ELSEWHERE ON THE DRAWING SET.
   - FOR ANY BRANCH CIRCUITS THAT ARE REQUIRED TO BE RELOCATED/EXTENDED, ETC.
2. DO NOT USE THIS SCHEDULE:
   - FOR LARGE MECHANICAL LOADS (ANYTHING SHOWN WITHIN THE EQUIPMENT CONNECTION SCHEDULE).
   - FOR SERVICE ENTRANCE CONDUCTORS.
   - WHERE SPECIFIC CONDUCTOR/CONDUIT IS CALLED FOR ON THE DRAWINGS.
3. WHERE CIRCUIT LENGTH EXCEEDS 100' - CONTRACTOR SHALL USE NEXT HIGHER PHASE/NEUTRAL CONDUCTOR SIZE, TO COMPENSATE FOR VOLTAGE DROP.
4. NOTE MC CABLE IS NOT ALLOWED.

MHE ENGINEERING
33 Airport Center Drive, Suite 202
New Windsor, NY 12553
(845) 567-3100
111 Wheatfield Drive, Suite 1
Milford, PA 18337
(570) 296-2765

BID ADDENDUM

JADE STONE ENGINEERING

STATE OF NEW YORK · JEFFREY E ROBINSON · LICENSED PROFESSIONAL ENGINEER · 095896

HAZARDOUS MATERIAL NOTE:
THE SERVICES PROVIDED BY MHE, INCLUDING ALL WORK DEPICTED ON MHE PLANS, DO NOT INCLUDE SERVICES RELATED TO THE IDENTIFICATION, CONTROLS OR HANDLING OF HAZARDOUS MATERIALS, INCLUDING SUCH MATERIALS AS ASBESTOS AND LEAD PAINT. ALL TESTING, IDENTIFICATION, ABATEMENT, CONTROLS, AND HANDLING OF HAZARDOUS MATERIALS SHALL BE UNDERTAKEN BY A HAZARDOUS MATERIAL CONSULTANT AND CERTIFIED PROFESSIONALS. IF SUCH MATERIALS HAVE BEEN IDENTIFIED, CONTRACTOR WILL COMMUNICATE DIRECTLY WITH HAZARDOUS MATERIAL PROFESSIONAL FOR THE PERFORMANCE OF ANY WORK ON OR ADJACENT TO SAID MATERIALS. IF UNIDENTIFIED MATERIALS OF CONCERN ARE ENCOUNTERED WHILE UNDERTAKING THE WORK SHOWN HEREON, CONTRACTOR SHALL IMMEDIATELY NOTIFY ENGINEER AND OWNER, AND SHALL OBTAIN DIRECTION FROM THE HAZARDOUS MATERIAL CONSULTANT PRIOR TO THE CONTINUATION OF WORK INVOLVING SUSPECTED MATERIAL.

UDIG·NY
SAFE DIGGING STARTS HERE
CALL 811

UNAUTHORIZED ADDITION OR ALTERATION OF THIS PLAN IS A VIOLATION OF SECTION 7209(2) OF THE NEW YORK STATE EDUCATION LAW.

ALL PRODUCTION & INTELLECTUAL PROPERTY RIGHT RESERVED ©

CAESARS LANE WWTP EXPANSION PROJECT: PHASE 2
145 CAESARS LN.
NEW WINDSOR, NY 12553

FOR TOWN OF NEW WINDSOR
555 UNION AVE.
NEW WINDSOR, NY 12553

ELECTRICAL SCHEDULES

REVISIONS

NO.	DESCRIPTION	DATE

ISSUED DATE:	06 JUNE, 2025
DESIGN BY:	RRM
DRAWN BY:	CDJ
CHECKED BY:	MGR
REVIEWED BY:	JER

SHEET NO.
E-044

PROJECT # 18-732 PHASE #

INDICATED BY ⬡ ON PLAN SHEETS

EQUIPMENT CONNECTION SCHEDULE (SHEET 1 OF 4)

SPECIFIC NOTES:

1. WHEN LOCATION IS NOT REFERENCED ON 'E' SHEETS, REFER TO ASSOCIATED CONTRACT DRAWINGS.
2. LOCATIONS SHOWN ARE GENERAL IN NATURE. COORDINATE WITH ALL TRADE CONTRACTORS PRIOR TO ROUGH-IN.

DISCONNECT/SAFETY SWITCH — TYPES:
A: NON-FUSED
B: FUSED
M: MOTOR RATED SWITCH
R: RECEPTACLE/CORD/PLUG
N: NOT REQUIRED
C: CKT BREAKER WITHIN SIGHT

DISCONNECT/SAFETY SWITCH — SIZES:
AF: AMPERE FRAME
NF: NON-FUSED
AT: FUSE SIZE (RK5, UON)

STARTER — TYPES:
VFD: VARIABLE FREQUENCY DRIVE
CMS: COMBINATION MOTOR STARTER WITH DISCONNECT
ATL: ACROSS THE LINE, FVNR MAGNETIC STARTER
M: MOTOR RATED SWITCH - MANUAL STARTER
P: PACKAGED CONTROLLER BY MANUFACTURER
LVT: THERMOSTAT

EQUIPMENT			ELECTRICAL LOAD				POWER CONNECTION			CONTROL CONNECTION		DISCONNECT/SAFETY SWITCH		STARTER		REMARKS
EQUIPMENT TAG	EQUIPMENT TYPE	LOCATION ON PLAN	FLA	HP (KW)	V	PH	HOMERUN TO	CIRCUIT BREAKER	CONDUCTORS & CONDUIT	HOMERUN / INTERLOCK TO	CONDUCTORS & CONDUIT	DISCONNECT TYPE/SIZE	NEMA ENCLOSURE TYPE	STARTER TYPE	NEMA ENCLOSURE TYPE	
PCD-01	PRIMARY DRIVE #1	PRIMARY SETTLING TANK #1	2.1	1	480	3	PC-CP-1	REFER TO RISER DIAGRAM		PC-CP-1	REFER TO RISER DIAGRAM	-	-	ATL	-	1,2
PCD-02	PRIMARY DRIVE #2	PRIMARY SETTLING TANK #2	2.1	1	480	3	PC-CP-2	REFER TO RISER DIAGRAM		PC-CP-2	REFER TO RISER DIAGRAM	-	-	ATL	-	1,2
PCD-03	PRIMARY DRIVE #3	PRIMARY SETTLING TANK #3	2.1	1	480	3	PC-CP-3	REFER TO RISER DIAGRAM		PC-CP-3	REFER TO RISER DIAGRAM	-	-	ATL	-	1,2
PCD-04	PRIMARY DRIVE #4	PRIMARY SETTLING TANK #4	2.1	1	480	3	PC-CP-4	REFER TO RISER DIAGRAM		PC-CP-4	REFER TO RISER DIAGRAM	-	-	ATL	-	1,2
PC-CP-1	CLARIFIER CONTROL PANEL #1	PRIMARY SETTLING TANK #1	-	-	480	3	HVP1	REFER TO SINGLE LINE DIAGRAM		R I/O-1	REFER TO RISER DIAGRAM	-	-	-	-	-
PC-CP-2	CLARIFIER CONTROL PANEL #2	PRIMARY SETTLING TANK #2	-	-	480	3	HVP1	REFER TO SINGLE LINE DIAGRAM		R I/O-1	REFER TO RISER DIAGRAM	-	-	-	-	-
PC-CP-3	CLARIFIER CONTROL PANEL #3	PRIMARY SETTLING TANK #3	-	-	480	3	HVP1	REFER TO SINGLE LINE DIAGRAM		R I/O-1	REFER TO RISER DIAGRAM	-	-	-	-	-
PC-CP-4	CLARIFIER CONTROL PANEL #4	PRIMARY SETTLING TANK #4	-	-	480	3	HVP1	REFER TO SINGLE LINE DIAGRAM		R I/O-1	REFER TO RISER DIAGRAM	-	-	-	-	-
SP-01	SCUM PUMP #1	PRIMARY SETTLING TANK #1	7.6	5	480	3	SP-CP-1	REFER TO RISER DIAGRAM		SP-CP-1	REFER TO RISER DIAGRAM	-	-	ATL	-	1,2
SP-02	SCUM PUMP #2	PRIMARY SETTLING TANK #2	7.6	5	480	3	SP-CP-1	REFER TO RISER DIAGRAM		SP-CP-1	REFER TO RISER DIAGRAM	-	-	ATL	-	1,2
SP-03	SCUM PUMP #3	PRIMARY SETTLING TANK #3	7.6	5	480	3	SP-CP-1	REFER TO RISER DIAGRAM		SP-CP-1	REFER TO RISER DIAGRAM	-	-	ATL	-	1,2
SP-04	SCUM PUMP #4	PRIMARY SETTLING TANK #4	7.6	5	480	3	SP-CP-1	REFER TO RISER DIAGRAM		SP-CP-1	REFER TO RISER DIAGRAM	-	-	ATL	-	1,2
SP-CP-1	SCUM PUMP CONTROL PANEL #1	PRIMARY SETTLING TANK #1	-	-	480	3	HVP1	REFER TO SINGLE LINE DIAGRAM		R I/O-1	REFER TO RISER DIAGRAM	-	-	-	-	-
SP-CP-2	SCUM PUMP CONTROL PANEL #2	PRIMARY SETTLING TANK #2	-	-	480	3	HVP1	REFER TO SINGLE LINE DIAGRAM		R I/O-1	REFER TO RISER DIAGRAM	-	-	-	-	-
SP-CP-3	SCUM PUMP CONTROL PANEL #3	PRIMARY SETTLING TANK #3	-	-	480	3	HVP1	REFER TO SINGLE LINE DIAGRAM		R I/O-1	REFER TO RISER DIAGRAM	-	-	-	-	-
SP-CP-4	SCUM PUMP CONTROL PANEL #4	PRIMARY SETTLING TANK #4	-	-	480	3	HVP1	REFER TO SINGLE LINE DIAGRAM		R I/O-1	REFER TO RISER DIAGRAM	-	-	-	-	-
P-SP-01	PRIMARY CLARIFIER SLUDGE PUMP #1	PRIMARY SLUDGE PUMP PIT	3	4.8	480	3	PSPCP-300	REFER TO RISER DIAGRAM		PSPCP-300	REFER TO RISER DIAGRAM	-	-	ATL	-	1
P-SP-02	PRIMARY CLARIFIER SLUDGE PUMP #2	PRIMARY SLUDGE PUMP PIT	3	4.8	480	3	PSPCP-300	REFER TO RISER DIAGRAM		PSPCP-300	REFER TO RISER DIAGRAM	-	-	ATL	-	1
PSPCP-300	PRIMARY SLUDGE PUMP CONTROL PANEL	PRIMARY SLUDGE ELECTRICAL BACKBOARD	-	-	480	3	HVP1	REFER TO SINGLE LINE DIAGRAM		R I/O-1	REFER TO RISER DIAGRAM	-	-	-	-	-
PS-AV-01	PRIMARY SLUDGE VALVE #1	SLUDGE CONTROL VALVE VAULT	4.4	FRACT.	120	1	PSVCP-300	REFER TO RISER DIAGRAM		PSVCP-300	REFER TO RISER DIAGRAM	-	-	ATL	-	1
PS-AV-02	PRIMARY SLUDGE VALVE #2	SLUDGE CONTROL VALVE VAULT	4.4	FRACT.	120	1	PSVCP-300	REFER TO RISER DIAGRAM		PSVCP-300	REFER TO RISER DIAGRAM	-	-	ATL	-	1
PS-AV-03	PRIMARY SLUDGE VALVE #3	SLUDGE CONTROL VALVE VAULT	4.4	FRACT.	120	1	PSVCP-300	REFER TO RISER DIAGRAM		PSVCP-300	REFER TO RISER DIAGRAM	-	-	ATL	-	1
PS-AV-04	PRIMARY SLUDGE VALVE #4	PROPOSED SLUDGE VALVE PIT	4.4	FRACT.	120	1	PSVCP-300	REFER TO RISER DIAGRAM		PSVCP-300	REFER TO RISER DIAGRAM	-	-	ATL	-	1,2
PSVCP-300	PRIMARY SLUDGE VALVE CONTROL PANEL	PRIMARY SLUDGE ELECTRICAL BACKBOARD	-	-	120	1	LVP1	20A/1P		R I/O-1	REFER TO RISER DIAGRAM	-	-	-	-	-
SP-300	SUMP PUMP	PRIMARY SLUDGE PUMP PIT	9.8	1/2	120	1	LVP1	20A/1P	(2)#10 & #10G, 1"C.	LOCAL CONTROL ONLY		R	WP	M	4X	3,4,5
SP-301	SUMP PUMP	SLUDGE CONTROL VALVE VAULT	9.8	1/2	120	1	LVP1	20A/1P	(2)#10 & #10G, 1"C.	LOCAL CONTROL ONLY		R	WP	M	4X	3,4,5
SP-302	SUMP PUMP	PROPOSED SLUDGE VALVE PIT	9.8	1/2	120	1	LVP1	20A/1P	(2)#10 & #10G, 1"C.	LOCAL CONTROL ONLY		R	WP	M	7	2,3,4,5
SP-05	SCUM PUMP #5	MBR BUILDING - SCUM PUMP AREA	7.6	5	480	3	SP-CP-5	REFER TO RISER DIAGRAM		SP-CP-5	REFER TO RISER DIAGRAM	-	-	ATL	-	1,2
SP-06	SCUM PUMP #6	MBR BUILDING - SCUM PUMP AREA	7.6	5	480	3	SP-CP-5	REFER TO RISER DIAGRAM		SP-CP-5	REFER TO RISER DIAGRAM	-	-	ATL	-	1,2
SP-CP-5	SCUM PUMP CONTROL PANEL #5	MBR BUILDING - SCUM PUMP AREA	-	-	480	3	HVP1	REFER TO SINGLE LINE DIAGRAM		R I/O-1	REFER TO RISER DIAGRAM	-	-	-	-	-
20-B-201-A	MEMBRANE BLOWER #1	MBR BUILDING - BLOWER ROOM	77	60	480	3	MCC1	REFER TO SINGLE LINE DIAGRAM		MCC1	REFER TO SINGLE LINE DIAGRAM	-	-	VFD	-	6
20-B-201-B	MEMBRANE BLOWER #2	MBR BUILDING - BLOWER ROOM	77	60	480	3	MCC1	REFER TO SINGLE LINE DIAGRAM		MCC1	REFER TO SINGLE LINE DIAGRAM	-	-	VFD	-	6
20-B-201-C	MEMBRANE BLOWER #3	MBR BUILDING - BLOWER ROOM	77	60	480	3	MCC1	REFER TO SINGLE LINE DIAGRAM		MCC1	REFER TO SINGLE LINE DIAGRAM	-	-	VFD	-	6
20-B-201-D	MEMBRANE BLOWER #4	MBR BUILDING - BLOWER ROOM	77	60	480	3	MCC1	REFER TO SINGLE LINE DIAGRAM		MCC1	REFER TO SINGLE LINE DIAGRAM	-	-	VFD	-	6
20-B-201-E	MEMBRANE BLOWER #5	MBR BUILDING - BLOWER ROOM	77	60	480	3	MCC1	REFER TO SINGLE LINE DIAGRAM		MCC1	REFER TO SINGLE LINE DIAGRAM	-	-	VFD	-	6
20-P-501-A	RAS PUMP #1	MBR BUILDING - RAS PUMP ROOM	40	30	480	3	MCC1	REFER TO SINGLE LINE DIAGRAM		MCC1	REFER TO SINGLE LINE DIAGRAM	A (60AF/NF)	4X	ATL	-	7
20-P-501-B	RAS PUMP #2	MBR BUILDING - RAS PUMP ROOM	40	30	480	3	MCC1	REFER TO SINGLE LINE DIAGRAM		MCC1	REFER TO SINGLE LINE DIAGRAM	A (60AF/NF)	4X	ATL	-	7
20-P-501-C	RAS PUMP #3	MBR BUILDING - RAS PUMP ROOM	40	30	480	3	MCC1	REFER TO SINGLE LINE DIAGRAM		MCC1	REFER TO SINGLE LINE DIAGRAM	A (60AF/NF)	4X	ATL	-	7
20-P-501-D	RAS PUMP #4	MBR BUILDING - RAS PUMP ROOM	40	30	480	3	MCC1	REFER TO SINGLE LINE DIAGRAM		MCC1	REFER TO SINGLE LINE DIAGRAM	A (60AF/NF)	4X	ATL	-	7
16-B-401-A	PROCESS BLOWER #1	MBR BUILDING - BLOWER ROOM	180	150	480	3	MCC1	REFER TO SINGLE LINE DIAGRAM		MCC1	REFER TO SINGLE LINE DIAGRAM	-	-	VFD	-	6
16-B-401-B	PROCESS BLOWER #2	MBR BUILDING - BLOWER ROOM	180	150	480	3	MCC1	REFER TO SINGLE LINE DIAGRAM		MCC1	REFER TO SINGLE LINE DIAGRAM	-	-	VFD	-	6
16-B-401-C	PROCESS BLOWER #3	MBR BUILDING - BLOWER ROOM	180	150	480	3	MCC1	REFER TO SINGLE LINE DIAGRAM		MCC1	REFER TO SINGLE LINE DIAGRAM	-	-	VFD	-	6
16-MX-211-1	ANOXIC SUBMERSIBLE MIXER #1	ANOXIC ZONE #1	11.2	8	480	3	MCC1	REFER TO SINGLE LINE DIAGRAM		MCC1	REFER TO SINGLE LINE DIAGRAM	A (30AF/NF)	4X	ATL	-	7
16-MX-211-2	ANOXIC SUBMERSIBLE MIXER #2	ANOXIC ZONE #2	11.2	8	480	3	MCC1	REFER TO SINGLE LINE DIAGRAM		MCC1	REFER TO SINGLE LINE DIAGRAM	A (30AF/NF)	4X	ATL	-	7
16-MX-211-3	ANOXIC SUBMERSIBLE MIXER #3	ANOXIC ZONE #3	11.2	8	480	3	MCC1	REFER TO SINGLE LINE DIAGRAM		MCC1	REFER TO SINGLE LINE DIAGRAM	A (30AF/NF)	4X	ATL	-	7
90-AC-001-A	AIR COMPRESSOR #1	MBR BUILDING - MECHANICAL ROOM	11	7.5	480	3	HVP1	REFER TO SINGLE LINE DIAGRAM		MBR-CP	REFER TO RISER DIAGRAM	A (30AF/NF)	4X	ATL	-	1
90-AC-001-B	AIR COMPRESSOR #2	MBR BUILDING - MECHANICAL ROOM	11	7.5	480	3	HVP1	REFER TO SINGLE LINE DIAGRAM		MBR-CP	REFER TO RISER DIAGRAM	A (30AF/NF)	4X	ATL	-	1
90-DR-001-A	REFRIGERATED DRYER #1	MBR BUILDING - MECHANICAL ROOM	3.4	-	120	1	LVP1	20A/1P	(2)#12 & #12G, 3/4"C.	MBR-CP	REFER TO RISER DIAGRAM	R	WP	M	4X	3,4,5
90-DR-001-B	REFRIGERATED DRYER #2	MBR BUILDING - MECHANICAL ROOM	3.4	-	120	1	LVP1	20A/1P	(2)#12 & #12G, 3/4"C.	MBR-CP	REFER TO RISER DIAGRAM	R	WP	M	4X	3,4,5
15-P-301-A	NAOH METERING PUMP	MBR BUILDING - CHEMICAL SKID ROOM	4.4	FRACTIONAL	120	1	LVP1	20A/1P	(2)#12 & #12G, 3/4"C.	MBR-CP	REFER TO RISER DIAGRAM	R	WP	M	4X	3,4,5,14
15-P-301-B	NAOH METERING PUMP	MBR BUILDING - CHEMICAL SKID ROOM	4.4	FRACTIONAL	120	1	LVP1	20A/1P	(2)#12 & #12G, 3/4"C.	MBR-CP	REFER TO RISER DIAGRAM	R	WP	M	4X	3,4,5,14
23-P-101-A	NACLO METERING PUMP	MBR BUILDING - CHEMICAL SKID ROOM	4.4	FRACTIONAL	120	1	LVP1	20A/1P	(2)#12 & #12G, 3/4"C.	MBR-CP	REFER TO RISER DIAGRAM	R	WP	M	4X	3,4,5,14
23-P-101-B	NACLO METERING PUMP	MBR BUILDING - CHEMICAL SKID ROOM	4.4	FRACTIONAL	120	1	LVP1	20A/1P	(2)#12 & #12G, 3/4"C.	MBR-CP	REFER TO RISER DIAGRAM	R	WP	M	4X	3,4,5,14
23-P-301-A	CITRIC ACID METERING PUMPS	MBR BUILDING - CASSETTE LAYDOWN AREA	4.4	FRACTIONAL	120	1	LVP1	20A/1P	(2)#12 & #12G, 3/4"C.	MBR-CP	REFER TO RISER DIAGRAM	R	WP	M	4X	3,4,5,14
23-P-301-B	CITRIC ACID METERING PUMPS	MBR BUILDING - CASSETTE LAYDOWN AREA	4.4	FRACTIONAL	120	1	LVP1	20A/1P	(2)#12 & #12G, 3/4"C.	MBR-CP	REFER TO RISER DIAGRAM	R	WP	M	4X	3,4,5,14
20-P-321-1	TURBIDITY SAMPLING PUMPS #1	MBR BUILDING - RAS PUMP ROOM	4.4	FRACTIONAL	120	1	LVP1	20A/1P	(2)#12 & #12G, 3/4"C.	MBR-CP	REFER TO RISER DIAGRAM	R	WP	M	4X	3,4,5
20-P-321-2	TURBIDITY SAMPLING PUMPS #2	MBR BUILDING - RAS PUMP ROOM	4.4	FRACTIONAL	120	1	LVP1	20A/1P	(2)#12 & #12G, 3/4"C.	MBR-CP	REFER TO RISER DIAGRAM	R	WP	M	4X	3,4,5
20-P-321-3	TURBIDITY SAMPLING PUMPS #3	MBR BUILDING - RAS PUMP ROOM	4.4	FRACTIONAL	120	1	LVP1	20A/1P	(2)#12 & #12G, 3/4"C.	MBR-CP	REFER TO RISER DIAGRAM	R	WP	M	4X	3,4,5
20-P-321-4	TURBIDITY SAMPLING PUMPS #4	MBR BUILDING - RAS PUMP ROOM	4.4	FRACTIONAL	120	1	LVP1	20A/1P	(2)#12 & #12G, 3/4"C.	MBR-CP	REFER TO RISER DIAGRAM	R	WP	M	4X	3,4,5
CTP-01	NAOH CHEMICAL TRANSFER PUMP	MBR BUILDING - CHEMICAL SKID ROOM	9.8	0.5	120	1	LVP1	20A/1P	(2)#12 & #12G, 3/4"C.	LOCAL CONTROL ONLY		R	WP	M	4X	3,4,5,14
CTP-02	NACLO CHEMICAL TRANSFER PUMP	MBR BUILDING - CHEMICAL SKID ROOM	9.8	0.5	120	1	LVP1	20A/1P	(2)#12 & #12G, 3/4"C.	LOCAL CONTROL ONLY		R	WP	M	4X	3,4,5,14
F-1	COOLING FAN #1	MBR BUILDING - BLOWER ROOM	4.4	FRACTIONAL	120	1	CFCP-1	REFER TO RISER DIAGRAM		CFCP-1	REFER TO RISER DIAGRAM	-	-	ATL	-	1
F-2	COOLING FAN #2	MBR BUILDING - BLOWER ROOM	4.4	FRACTIONAL	120	1	CFCP-1	REFER TO RISER DIAGRAM		CFCP-1	REFER TO RISER DIAGRAM	-	-	ATL	-	1
F-3	COOLING FAN #3	MBR BUILDING - BLOWER ROOM	4.4	FRACTIONAL	120	1	CFCP-1	REFER TO RISER DIAGRAM		CFCP-1	REFER TO RISER DIAGRAM	-	-	ATL	-	1
F-4	COOLING FAN #4	MBR BUILDING - BLOWER ROOM	4.4	FRACTIONAL	120	1	CFCP-1	REFER TO RISER DIAGRAM		CFCP-1	REFER TO RISER DIAGRAM	-	-	ATL	-	1
F-5	COOLING FAN #5	MBR BUILDING - BLOWER ROOM	4.4	FRACTIONAL	120	1	CFCP-1	REFER TO RISER DIAGRAM		CFCP-1	REFER TO RISER DIAGRAM	-	-	ATL	-	1
F-6	COOLING FAN #6	MBR BUILDING - BLOWER ROOM	4.4	FRACTIONAL	120	1	CFCP-1	REFER TO RISER DIAGRAM		CFCP-1	REFER TO RISER DIAGRAM	-	-	ATL	-	1
F-7	COOLING FAN #7	MBR BUILDING - BLOWER ROOM	4.4	FRACTIONAL	120	1	CFCP-1	REFER TO RISER DIAGRAM		CFCP-1	REFER TO RISER DIAGRAM	-	-	ATL	-	1
F-8	COOLING FAN #8	MBR BUILDING - BLOWER ROOM	4.4	FRACTIONAL	120	1	CFCP-1	REFER TO RISER DIAGRAM		CFCP-1	REFER TO RISER DIAGRAM	-	-	ATL	-	1
CFCP-1	BLOWER COOLING FAN CONTROL PANEL	MBR BUILDING - BLOWER ROOM	-	-	120	1	LVP1	30A/1P	(2)#10 & #10G, 3/4"C.	MBR-CP	REFER TO RISER DIAGRAM	-	-	-	-	-
DP-500	DRAIN PUMP #1	MBR BUILDING - MBR DRAIN PUMP STATION	3.4	2	480	3	DPCP-500	REFER TO RISER DIAGRAM		DPCP-500	REFER TO RISER DIAGRAM	-	-	ATL	-	1
DP-500	DRAIN PUMP #2	MBR BUILDING - MBR DRAIN PUMP STATION	3.4	2	480	3	DPCP-500	REFER TO RISER DIAGRAM		DPCP-500	REFER TO RISER DIAGRAM	-	-	ATL	-	1
DPCP-500	DRAIN PUMP CONTROL PANEL	MBR BUILDING - CASSETTE LAYDOWN AREA	-	-	480	3	HVP1	REFER TO SINGLE LINE DIAGRAM		R I/O-1	REFER TO RISER DIAGRAM	-	-	-	-	-
HST-1	BRIDGE CRANE HOIST	MBR BUILDING - RAS ROOM	11	7.2	480	3	BCCP-1	REFER TO RISER DIAGRAM		BCCP-1	REFER TO RISER DIAGRAM	-	-	VFD	-	1,6
TRLY-1	BRIDGE CRANE TROLLEY	MBR BUILDING - RAS ROOM	2.1	0.6	480	3	BCCP-1	REFER TO RISER DIAGRAM		BCCP-1	REFER TO RISER DIAGRAM	-	-	VFD	-	1,6
TRVL-1L	BRIDGE CRANE END TRUCK	MBR BUILDING - RAS ROOM	1.1	0.4	480	3	BCCP-1	REFER TO RISER DIAGRAM		BCCP-1	REFER TO RISER DIAGRAM	-	-	VFD	-	1,6
TRVL-1R	BRIDGE CRANE END TRUCK	MBR BUILDING - RAS ROOM	1.1	0.4	480	3	BCCP-1	REFER TO RISER DIAGRAM		BCCP-1	REFER TO RISER DIAGRAM	-	-	VFD	-	1,6
BCCP-1	BRIDGE CRANE CONTROL PANEL	MBR BUILDING - RAS ROOM	-	-	480	3	HVP1	REFER TO SINGLE LINE DIAGRAM		LOCAL CONTROL ONLY		-	-	-	-	-
HST-2	BRIDGE CRANE HOIST	MBR BUILDING - CASSETTE LAYDOWN AREA	11	7.2	480	3	BCCP-2	REFER TO RISER DIAGRAM		BCCP-2	REFER TO RISER DIAGRAM	-	-	VFD	-	1,6
TRLY-2	BRIDGE CRANE TROLLEY	MBR BUILDING - CASSETTE LAYDOWN AREA	2.1	0.6	480	3	BCCP-2	REFER TO RISER DIAGRAM		BCCP-2	REFER TO RISER DIAGRAM	-	-	VFD	-	1,6
TRVL-2L	BRIDGE CRANE END TRUCK	MBR BUILDING - CASSETTE LAYDOWN AREA	1.1	0.4	480	3	BCCP-2	REFER TO RISER DIAGRAM		BCCP-2	REFER TO RISER DIAGRAM	-	-	VFD	-	1,6
TRVL-2R	BRIDGE CRANE END TRUCK	MBR BUILDING - CASSETTE LAYDOWN AREA	1.1	0.4	480	3	BCCP-2	REFER TO RISER DIAGRAM		BCCP-2	REFER TO RISER DIAGRAM	-	-	VFD	-	1,6
BCCP-2	BRIDGE CRANE CONTROL PANEL	MBR BUILDING - CASSETTE LAYDOWN AREA	-	-	480	3	HVP1	REFER TO SINGLE LINE DIAGRAM		LOCAL CONTROL ONLY		-	-	-	-	-
HVAC-500	HVAC MONITORING CONTROL PANEL	MBR BUILDING - 2ND FLOOR ELECTRICAL ROOM	-	-	120	1	LVP1	20A/1P	(2)#12 & #12G, 3/4"C.	R I/O-1	REFER TO RISER DIAGRAM	-	-	-	-	-
R I/O-1	REMOTE I/O PANEL #1	MBR BUILDING - ELEVATED OFFICE	-	-	120	1	LVP1	30A/1P	(2)#10 & #10G, 1"C.	MCP	REFER TO RISER DIAGRAM	-	-	-	-	-
S-SLD-15	SLUICE GATE #1	MBR BUILDING - MEMBRANE DISCHARGE CHANNEL	5	-	480	3	HVP1	20A/3P	(3)#12 & #12G, 3/4"C.	MBR-CP	REFER TO RISER DIAGRAM	A (30AF/NF)	4X	P	-	-
S-SLD-16	SLUICE GATE #2	MBR BUILDING - MEMBRANE DISCHARGE CHANNEL	5	-	480	3	HVP1	20A/3P	(3)#12 & #12G, 3/4"C.	MBR-CP	REFER TO RISER DIAGRAM	A (30AF/NF)	4X	P	-	-
S-SLD-17	SLUICE GATE #3	MBR BUILDING - MEMBRANE DISCHARGE CHANNEL	5	-	480	3	HVP1	20A/3P	(3)#12 & #12G, 3/4"C.	MBR-CP	REFER TO RISER DIAGRAM	A (30AF/NF)	4X	P	-	-
S-SLD-18	SLUICE GATE #4	MBR BUILDING - MEMBRANE DISCHARGE CHANNEL	5	-	480	3	HVP1	20A/3P	(3)#12 & #12G, 3/4"C.	MBR-CP	REFER TO RISER DIAGRAM	A (30AF/NF)	4X	P	-	-

REFER TO SHEET E-046 FOR SCHEDULE CONTINUATION

MHE ENGINEERING
33 Airport Center Drive, Suite 202
New Windsor, NY 12553
(845) 567-3100
111 Wheatfield Drive, Suite 1
Milford, PA 18337
(570) 296-2765

BID ADDENDUM

JADE STONE ENGINEERING

STATE OF NEW YORK · JEFFREY E. ROBINSON · 095896 · LICENSED PROFESSIONAL ENGINEER

HAZARDOUS MATERIAL NOTE:
THE SERVICES PROVIDED BY MHE, INCLUDING ALL WORK DEPICTED ON MHE PLANS, DO NOT INCLUDE SERVICES RELATED TO THE IDENTIFICATION, CONTROLS OR HANDLING OF HAZARDOUS MATERIALS, INCLUDING SUCH MATERIALS AS ASBESTOS AND LEAD PAINT. ALL TESTING, IDENTIFICATION, ABATEMENT, CONTROLS, AND HANDLING OF HAZARDOUS MATERIALS SHALL BE UNDERTAKEN BY A HAZARDOUS MATERIAL CONSULTANT AND CERTIFIED PROFESSIONALS. IF SUCH MATERIALS HAVE BEEN IDENTIFIED, CONTRACTOR WILL COMMUNICATE DIRECTLY WITH HAZARDOUS MATERIAL PROFESSIONAL FOR THE PERFORMANCE OF ANY WORK ON OR ADJACENT TO SAID MATERIALS. IF UNIDENTIFIED MATERIALS OF CONCERN ARE ENCOUNTERED WHILE UNDERTAKING THE WORK SHOWN HEREON, CONTRACTOR SHALL IMMEDIATELY NOTIFY ENGINEER AND OWNER, AND SHALL OBTAIN DIRECTION FROM THE HAZARDOUS MATERIAL CONSULTANT PRIOR TO THE CONTINUATION OF WORK INVOLVING SUSPECTED MATERIAL.

UDIG·NY SAFE DIGGING STARTS HERE
CALL 811

UNAUTHORIZED ADDITION OR ALTERATION OF THIS PLAN IS A VIOLATION OF SECTION 7209(2) OF THE NEW YORK STATE EDUCATION LAW.

ALL PRODUCTION & INTELLECTUAL PROPERTY RIGHT RESERVED ©

CAESARS LANE WWTP EXPANSION PROJECT: PHASE 2
145 CAESARS LN.
NEW WINDSOR, NY 12553
FOR TOWN OF NEW WINDSOR
555 UNION AVE.
NEW WINDSOR, NY 12553

ELECTRICAL SCHEDULES

REVISIONS

NO.	DESCRIPTION	DATE

ISSUED DATE:	06 JUNE, 2025
DESIGN BY:	RRM
DRAWN BY:	CDJ
CHECKED BY:	MGR
REVIEWED BY:	JER

SHEET NO.
E-045

PROJECT # 18-732 PHASE #

INDICATED BY ⌀ ON PLAN SHEETS

EQUIPMENT CONNECTION SCHEDULE (SHEET 2 OF 4)

SPECIFIC NOTES:

1. WHEN LOCATION IS NOT REFERENCED ON 'E' SHEETS, REFER TO ASSOCIATED CONTRACT DRAWINGS.
2. LOCATIONS SHOWN ARE GENERAL IN NATURE. COORDINATE WITH ALL TRADE CONTRACTORS PRIOR TO ROUGH-IN.

DISCONNECT/SAFETY SWITCH — TYPES:
A: NON-FUSED
B: FUSED
M: MOTOR RATED SWITCH
R: RECEPTACLE/CORD/PLUG
N: NOT REQUIRED
C: CKT BREAKER WITHIN SIGHT

DISCONNECT/SAFETY SWITCH — SIZES:
AF: AMPERE FRAME
NF: NON-FUSED
AT: FUSE SIZE (RK5, UON)

STARTER — TYPES:
VFD: VARIABLE FREQUENCY DRIVE
CMS: COMBINATION MOTOR STARTER WITH DISCONNECT
ATL: ACROSS THE LINE, FVNR MAGNETIC STARTER
M: MOTOR RATED SWITCH - MANUAL STARTER
P: PACKAGED CONTROLLER BY MANUFACTURER
LVT: THERMOSTAT

EQUIPMENT			ELECTRICAL LOAD				POWER CONNECTION			CONTROL CONNECTION		DISCONNECT/SAFETY SWITCH		STARTER		REMARKS
EQUIPMENT TAG	EQUIPMENT TYPE	LOCATION ON PLAN	FLA	HP (KW)	V	PH	HOMERUN TO	CIRCUIT BREAKER	CONDUCTORS & CONDUIT	HOMERUN / INTERLOCK TO	CONDUCTORS & CONDUIT	DISCONNECT TYPE/SIZE	NEMA ENCLOSURE TYPE	STARTER TYPE	NEMA ENCLOSURE TYPE	
IP-01	INFLUENT PUMP #1	INFLUENT DRY WELL	77	60	480	3	HVP6	150A/3P	(3)#1/0 & #6G, 2" C.	R I/O-5	REFER TO RISER DIAGRAM	A (200AF/NF)	4X	VFD	-	6,7
IP-02	INFLUENT PUMP #2	INFLUENT DRY WELL	77	60	480	3	HVP6	150A/3P	(3)#1/0 & #6G, 2" C.	R I/O-5	REFER TO RISER DIAGRAM	A (200AF/NF)	4X	VFD	-	6,7
IP-03	INFLUENT PUMP #3	INFLUENT DRY WELL	77	60	480	3	HVP6	150A/3P	(3)#1/0 & #6G, 2" C.	R I/O-5	REFER TO RISER DIAGRAM	A (200AF/NF)	4X	VFD	-	6,7
SP-01	SUMP PUMP	INFLUENT DRY WELL	9.8	1/2	120	1	LVP6	20A/1P	(2)#10 & #10G, 1"C.	LOCAL CONTROL ONLY		R	WP	M	4X	3,4,5
MAS-801	PUMP MONITORING SYSTEM	MICROSCREEN BUILDING - ELECTRICAL AREA	-	-	120	1	LVP6	30A/1P	(2)#10 & #10G, 1"C.	R I/O-5	REFER TO RISER DIAGRAM	-	-	-	-	-
R I/O-5	INFLUENT PUMP CONTROL PANEL	MICROSCREEN BUILDING - ELECTRICAL AREA	-	-	120	1	LVP6	30A/1P	(2)#10 & #10G, 1"C.	R I/O-1	REFER TO RISER DIAGRAM	-	-	-	-	-
MCR-01	SCREEN DRIVE MOTOR #1	MICROSCREEN BUILDING - FINE SCREEN AREA	1.6	3/4	480	3	MS-CP-1	REFER TO RISER DIAGRAM		MC-CP-1	REFER TO RISER DIAGRAM	-	-	VFD	-	1,6
CMP-01	WASHING COMPACTOR #1	MICROSCREEN BUILDING - FINE SCREEN AREA	3	1.5	480	3	MS-CP-1	REFER TO RISER DIAGRAM		MC-CP-1	REFER TO RISER DIAGRAM	-	-	VFD	-	1,6
MS-CP-1	MICROSCREEN CONTROL PANEL #1	MICROSCREEN BUILDING - ELECTRICAL AREA	-	-	480	3	HVP6	REFER TO SINGLE LINE DIAGRAM		R I/O-5	REFER TO RISER DIAGRAM	-	-	-	-	-
MCR-02	SCREEN DRIVE MOTOR #2	MICROSCREEN BUILDING - FINE SCREEN AREA	1.6	3/4	480	3	MS-CP-2	REFER TO RISER DIAGRAM		MS-CP-2	REFER TO RISER DIAGRAM	-	-	VFD	-	1,6
CMP-02	WASHING COMPACTOR #2	MICROSCREEN BUILDING - FINE SCREEN AREA	3	1.5	480	3	MS-CP-2	REFER TO RISER DIAGRAM		MS-CP-2	REFER TO RISER DIAGRAM	-	-	VFD	-	1,6
MS-CP-2	MICROSCREEN CONTROL PANEL #2	MICROSCREEN BUILDING - ELECTRICAL AREA	-	-	480	3	HVP6	REFER TO SINGLE LINE DIAGRAM		R I/O-5	REFER TO RISER DIAGRAM	-	-	-	-	-
AC-1	AIR COMPRESSOR	GARAGE	44	7.5	208	1	LVP7	60A/2P	(2)#6 & 10G, 1"C.	LOCAL CONTROL ONLY		-	-	-	-	-
EHS-1	ELECTRONIC HOIST SYSTEM	GARAGE	16.7	5	208	3	LVP7	40A/3P	(4)#8 & 10G, 1"C.	LOCAL CONTROL ONLY		-	-	-	-	-
LMM-1	LATHE MILLING MACHINE	GARAGE	13.2	2	208	1	LVP7	30A/2P	(2)#10 & #10G, 1"C.	LOCAL CONTROL ONLY		-	-	-	-	-
ASBC-1	ABRASIVE SAND BLASTING CABINET	GARAGE	10	(1.2KW)	120	1	LVP7	20A/1P	(2)#12 & #12G, 3/4"C.	LOCAL CONTROL ONLY		-	-	-	-	-
PAB-01	BLOWER #1	POST-AERATION PLATFORM & CANOPY	27	20	480	3	HVP8	REFER TO SINGLE LINE DIAGRAM		DBSP	REFER TO RISER DIAGRAM	A (60AF/NF)	4X	VFD	-	6,7
PAB-02	BLOWER #2	POST-AERATION PLATFORM & CANOPY	27	20	480	4	HVP8	REFER TO SINGLE LINE DIAGRAM		DBSP	REFER TO RISER DIAGRAM	A (60AF/NF)	4X	VFD	-	6,7
20-P-610-A	BACKPULSE PUMP #1	DECHLORINATION BUILDING	77	58	480	3	HVP8	REFER TO SINGLE LINE DIAGRAM		DBSP	REFER TO RISER DIAGRAM	A (200AF/NF)	4X	VFD	-	6,7
20-P-610-B	BACKPULSE PUMP #2	DECHLORINATION BUILDING	77	58	480	3	HVP8	REFER TO SINGLE LINE DIAGRAM		DBSP	REFER TO RISER DIAGRAM	A (200AF/NF)	4X	VFD	-	6,7
PW-01	PLANT WATER PUMP #1	PREFAB NON-POTABLE WATER SUCTION LIFT STATION	52	40	480	3	PWCP-600	REFER TO RISER DIAGRAM		PWCP-400	REFER TO RISER DIAGRAM	-	-	VFD	-	1,6
PW-02	PLANT WATER PUMP #2	PREFAB NON-POTABLE WATER SUCTION LIFT STATION	52	40	480	3	PWCP-600	REFER TO RISER DIAGRAM		PWCP-400	REFER TO RISER DIAGRAM	-	-	VFD	-	1,6
PWCP-600	PUMP CONTROL PANEL	PREFAB NON-POTABLE WATER SUCTION LIFT STATION	-	-	480	3	HVP8	REFER TO SINGLE LINE DIAGRAM		DBSP	REFER TO RISER DIAGRAM	-	-	-	-	-
P-601	COOLING WATER PUMP #1	DISINFECTION TANK	40	30	480	3	MCC2	REFER TO SINGLE LINE DIAGRAM		ATAD-CP	REFER TO RISER DIAGRAM	A (60AF/NF)	4X	VFD	-	6,7
P-602	COOLING WATER PUMP #2	DISINFECTION TANK	40	30	480	3	MCC2	REFER TO SINGLE LINE DIAGRAM		ATAD-CP	REFER TO RISER DIAGRAM	A (60AF/NF)	4X	VFD	-	6,7
RDT-01	LEFT DRUM DRIVE MOTOR	ATAD BUILDING - THICKENING ROOM	2.1	1	480	3	RDT-CP	REFER TO RISER DIAGRAM		RDT-CP	REFER TO RISER DIAGRAM	-	-	VFD	-	1,6
RDT-02	LEFT DRUM DRIVE MOTOR	ATAD BUILDING - THICKENING ROOM	2.1	1	480	3	RDT-CP	REFER TO RISER DIAGRAM		RDT-CP	REFER TO RISER DIAGRAM	-	-	VFD	-	1,6
RDT-WW-01	WASH WATER BOOSTER PUMP	ATAD BUILDING - THICKENING ROOM	3.4	2	480	3	RDT-CP	REFER TO RISER DIAGRAM		RDT-CP	REFER TO RISER DIAGRAM	-	-	ATL	-	1
RDT-FP-01	RTD SLUDGE FEED PUMP	ATAD BUILDING - THICKENING ROOM	21	15	480	3	RDT-CP	REFER TO RISER DIAGRAM		RDT-CP	REFER TO RISER DIAGRAM	-	-	VFD	-	6
RTD-TSP-01	RTD THICKENED SLUDGE PUMP	ATAD BUILDING - THICKENING ROOM	27	20	480	3	RDT-CP	REFER TO RISER DIAGRAM		RDT-CP	REFER TO RISER DIAGRAM	-	-	VFD	-	6
P-401	POLYMER PUMP	ATAD BUILDING - THICKENING ROOM	9.8	0.5	120	1	RDT-CP	REFER TO RISER DIAGRAM		RDT-CP	REFER TO RISER DIAGRAM	-	-	ATL	-	1
P-402	BOOSTER PUMP	ATAD BUILDING - THICKENING ROOM	13.8	0.75	120	2	RDT-CP	REFER TO RISER DIAGRAM		RDT-CP	REFER TO RISER DIAGRAM	-	-	ATL	-	1
P-403	POLYMER MIXER	ATAD BUILDING - THICKENING ROOM	24	2	120	3	RDT-CP	REFER TO RISER DIAGRAM		RDT-CP	REFER TO RISER DIAGRAM	-	-	ATL	-	1
RDT-CP	ROTARY DRUM THICKENER CONTROL PANEL	ATAD BUILDING - THICKENING ROOM	-	-	480	3	MCC2	REFER TO SINGLE LINE DIAGRAM		R I/O-2	REFER TO RISER DIAGRAM	-	-	-	-	-
P-101	THERMAER JET PUMP 1	ATAD BUILDING - EQUIPMENT ROOM	124	100	480	3	MCC2	REFER TO SINGLE LINE DIAGRAM		ATAD-CP	REFER TO RISER DIAGRAM	A (200AF/NF)	4X	VFD	-	6,7
P-202	THERMAER JET PUMP 2	ATAD BUILDING - EQUIPMENT ROOM	125	100	480	4	MCC2	REFER TO SINGLE LINE DIAGRAM		ATAD-CP	REFER TO RISER DIAGRAM	A (200AF/NF)	4X	VFD	-	6,7
P-401	SNDR JET PUMP	ATAD BUILDING - EQUIPMENT ROOM	77	60	480	3	MCC2	REFER TO SINGLE LINE DIAGRAM		ATAD-CP	REFER TO RISER DIAGRAM	A (200AF/NF)	4X	VFD	-	6,7
B-103	THERMAER 1 BLOWER	ATAD BUILDING - EQUIPMENT ROOM	52	40	480	3	MCC2	REFER TO SINGLE LINE DIAGRAM		ATAD-CP	REFER TO RISER DIAGRAM	A (200AF/NF)	4X	VFD	-	6,7
B-203	THERMAER 2 BLOWER	ATAD BUILDING - EQUIPMENT ROOM	52	40	480	3	MCC2	REFER TO SINGLE LINE DIAGRAM		ATAD-CP	REFER TO RISER DIAGRAM	A (200AF/NF)	4X	VFD	-	6,7
B-403	SNDR BLOWER	ATAD BUILDING - EQUIPMENT ROOM	52	40	480	3	MCC2	REFER TO SINGLE LINE DIAGRAM		ATAD-CP	REFER TO RISER DIAGRAM	A (200AF/NF)	4X	VFD	-	6,7
B-503	SLUDGE HOLDING BLOWER	ATAD BUILDING - EQUIPMENT ROOM	77	60	480	3	MCC2	REFER TO SINGLE LINE DIAGRAM		ATAD-CP	REFER TO RISER DIAGRAM	A (200AF/NF)	4X	VFD	-	6,7
B-1103	SPARE BLOWER	ATAD BUILDING - EQUIPMENT ROOM	77	60	480	3	MCC2	REFER TO SINGLE LINE DIAGRAM		ATAD-CP	REFER TO RISER DIAGRAM	A (200AF/NF)	4X	VFD	-	6,7
P-901	TRANSFER PUMP 1	ATAD BUILDING - EQUIPMENT ROOM	14	10	480	3	MCC2	REFER TO SINGLE LINE DIAGRAM		ATAD-CP	REFER TO RISER DIAGRAM	A (30AF/NF)	4X	VFD	-	6,7
P-902	TRANSFER PUMP	ATAD BUILDING - EQUIPMENT ROOM	14	10	480	3	MCC2	REFER TO SINGLE LINE DIAGRAM		ATAD-CP	REFER TO RISER DIAGRAM	A (30AF/NF)	4X	VFD	-	6,7
B-700	BIOFILTER OFFGAS FAN	BIOFILTER - EXTERIOR	40	30	480	3	MCC2	REFER TO SINGLE LINE DIAGRAM		ATAD-CP	REFER TO RISER DIAGRAM	A (60AF/NF)	4X	VFD	-	6,7
B-701	RDT BOOSTER FAN	BIOFILTER - EXTERIOR	2.1	1	480	3	MCC2	REFER TO SINGLE LINE DIAGRAM		ATAD-CP	REFER TO RISER DIAGRAM	A (30AF/NF)	4X	VFD	-	6,7
P-601	COOLING WATER PUMP 1	ATAD BUILDING - EQUIPMENT ROOM	40	30	480	3	MCC2	REFER TO SINGLE LINE DIAGRAM		ATAD-CP	REFER TO RISER DIAGRAM	A (60AF/NF)	4X	VFD	-	6,7
P-601	COOLING WATER PUMP 2	ATAD BUILDING - EQUIPMENT ROOM	40	30	480	3	MCC2	REFER TO SINGLE LINE DIAGRAM		ATAD-CP	REFER TO RISER DIAGRAM	A (60AF/NF)	4X	VFD	-	6,7
V-702	DAMPER	ATAD BUILDING - EQUIPMENT ROOM	4.4	FRACTIONAL	120	1	LPMCC	20A/1P	(2)#12 & #12G, 3/4"C.	ATAD-CP	REFER TO RISER DIAGRAM	M	4X	-	-	-
V-704	NPW VALVE	ATAD BUILDING - EQUIPMENT ROOM	4.4	FRACTIONAL	120	1	LPMCC	20A/1P	(2)#12 & #12G, 3/4"C.	ATAD-CP	REFER TO RISER DIAGRAM	M	4X	-	-	-
V-705	NPW VALVE	ATAD BUILDING - EQUIPMENT ROOM	4.4	FRACTIONAL	120	1	LPMCC	20A/1P	(2)#12 & #12G, 3/4"C.	ATAD-CP	REFER TO RISER DIAGRAM	M	4X	-	-	-
V-811	FEED VALVE	ATAD BUILDING - EQUIPMENT ROOM	4.4	FRACTIONAL	120	1	LPMCC	20A/1P	(2)#12 & #12G, 3/4"C.	ATAD-CP	REFER TO RISER DIAGRAM	M	4X	-	-	-
V-812	FEED VALVE	ATAD BUILDING - EQUIPMENT ROOM	4.4	FRACTIONAL	120	1	LPMCC	20A/1P	(2)#12 & #12G, 3/4"C.	ATAD-CP	REFER TO RISER DIAGRAM	M	4X	-	-	-
V-910	WASTE VALVE	ATAD BUILDING - EQUIPMENT ROOM	4.4	FRACTIONAL	120	1	LPMCC	20A/1P	(2)#12 & #12G, 3/4"C.	ATAD-CP	REFER TO RISER DIAGRAM	M	4X	-	-	-
V-911	WASTE VALVE	ATAD BUILDING - EQUIPMENT ROOM	4.4	FRACTIONAL	120	1	LPMCC	20A/1P	(2)#12 & #12G, 3/4"C.	ATAD-CP	REFER TO RISER DIAGRAM	M	4X	-	-	-
V-912	WASTE VALVE	ATAD BUILDING - EQUIPMENT ROOM	4.4	FRACTIONAL	120	1	LPMCC	20A/1P	(2)#12 & #12G, 3/4"C.	ATAD-CP	REFER TO RISER DIAGRAM	M	4X	-	-	-
V-913	FEED VALVE	ATAD BUILDING - EQUIPMENT ROOM	4.4	FRACTIONAL	120	1	LPMCC	20A/1P	(2)#12 & #12G, 3/4"C.	ATAD-CP	REFER TO RISER DIAGRAM	M	4X	-	-	-
V-914	FEED VALVE	ATAD BUILDING - EQUIPMENT ROOM	4.4	FRACTIONAL	120	1	LPMCC	20A/1P	(2)#12 & #12G, 3/4"C.	ATAD-CP	REFER TO RISER DIAGRAM	M	4X	-	-	-
V-915	FEED VALVE	ATAD BUILDING - EQUIPMENT ROOM	4.4	FRACTIONAL	120	1	LPMCC	20A/1P	(2)#12 & #12G, 3/4"C.	ATAD-CP	REFER TO RISER DIAGRAM	M	4X	-	-	-
V-918	NPW VALVE	ATAD BUILDING - EQUIPMENT ROOM	4.4	FRACTIONAL	120	1	LPMCC	20A/1P	(2)#12 & #12G, 3/4"C.	ATAD-CP	REFER TO RISER DIAGRAM	M	4X	-	-	-
-	THERMAER INSTRUMENT CABINET #1	ATAD BUILDING - EQUIPMENT ROOM	-	-	120	1	LPMCC	20A/1P	(2)#12 & #12G, 3/4"C.	ATAD-CP	REFER TO RISER DIAGRAM	-	-	-	-	-
-	THERMAER INSTRUMENT CABINET #2	ATAD BUILDING - EQUIPMENT ROOM	-	-	120	1	LPMCC	20A/1P	(2)#12 & #12G, 3/4"C.	ATAD-CP	REFER TO RISER DIAGRAM	-	-	-	-	-
-	SNDR INSTRUMENT CABINET #3	ATAD BUILDING - EQUIPMENT ROOM	-	-	120	1	LPMCC	20A/1P	(2)#12 & #12G, 3/4"C.	ATAD-CP	REFER TO RISER DIAGRAM	-	-	-	-	-
-	HEATX INSTRUMENT CABINET #4	ATAD BUILDING - EQUIPMENT ROOM	-	-	120	1	LPMCC	20A/1P	(2)#12 & #12G, 3/4"C.	ATAD-CP	REFER TO RISER DIAGRAM	-	-	-	-	-
-	BIOFILTER INSTRUMENT CABINET #5	ATAD BUILDING - EQUIPMENT ROOM	-	-	120	1	LPMCC	20A/1P	(2)#12 & #12G, 3/4"C.	ATAD-CP	REFER TO RISER DIAGRAM	-	-	-	-	-
ATAD-CP	ATAD CONTROL PANEL	ATAD BUILDING - ELECTRICAL ROOM	-	-	120	1	LPMCC	20A/1P	(2)#12 & #12G, 3/4"C.	R I/O-4	REFER TO RISER DIAGRAM	-	-	-	-	-
FP-400	FILTRATE PUMP 1	FILTRATE PUMP WET WELL	3.4	2	480	3	FPCP-400	REFER TO RISER DIAGRAM		FPCP-400	REFER TO RISER DIAGRAM	-	-	ATL	-	1
FP-401	FILTRATE PUMP 2	FILTRATE PUMP WET WELL	3.4	2	480	3	FPCP-400	REFER TO RISER DIAGRAM		FPCP-400	REFER TO RISER DIAGRAM	-	-	ATL	-	1
FPCP-400	FILTRATE PUMP CONTROL PANEL	ATAD BUILDING - EXTERIOR WALL	-	-	480	3	MCC2	REFER TO SINGLE LINE DIAGRAM		R I/O-4	REFER TO RISER DIAGRAM	-	-	-	-	-
BPSFP-03	BELT PRESS #1 SLUDGE FEED PUMP	ATAD BUILDING - EQUIPMENT ROOM	21	15	480	3	HVP5	REFER TO SINGLE LINE DIAGRAM		R I/O-4	REFER TO RISER DIAGRAM	-	-	VFD	-	6
BPSFP-04	BELT PRESS #2 SLUDGE FEED PUMP	ATAD BUILDING - EQUIPMENT ROOM	21	15	480	3	HVP5	REFER TO SINGLE LINE DIAGRAM		R I/O-4	REFER TO RISER DIAGRAM	-	-	VFD	-	6
HVAC-400	HVAC MONITORING CONTROL PANEL	ATAD BUILDING - ELECTRICAL ROOM	-	-	120	1	LVP5	20A/1P	(2)#12 & #12G, 3/4"C.	R I/O-4	REFER TO RISER DIAGRAM	-	-	-	-	-
R I/O-4	REMOTE I/O PANEL #4	ATAD BUILDING - ELECTRICAL ROOM	-	-	120	1	LVP5	30A/1P	(2)#10 & #10G, 1"C.	R I/O-1	REFER TO RISER DIAGRAM	-	-	-	-	-
BPGD-01	GRAVITY DRIVE #1 (E.T.R.)	DEWATERING BUILDING - MECHANICAL OPERATIONS ROOM	6	1.5	240	3	BPCP-01	REFER TO RISER DIAGRAM		BPCP-01	REFER TO RISER DIAGRAM	-	-	VFD	-	1,6
BDP-01	BELT PRESS DRIVE #1 (E.T.R.)	DEWATERING BUILDING - MECHANICAL OPERATIONS ROOM	6	1.5	240	3	BPCP-01	REFER TO RISER DIAGRAM		BPCP-01	REFER TO RISER DIAGRAM	-	-	VFD	-	1,6
BDP-02	BELT PRESS DRIVE #2 (E.T.R.)	DEWATERING BUILDING - MECHANICAL OPERATIONS ROOM	6	1.5	240	3	BPCP-01	REFER TO RISER DIAGRAM		BPCP-01	REFER TO RISER DIAGRAM	-	-	VFD	-	1,6
FD-01	FEEDBOX DRIVE #1 (E.T.R.)	DEWATERING BUILDING - MECHANICAL OPERATIONS ROOM	2.2	1/3	240	3	BPCP-01	REFER TO RISER DIAGRAM		BPCP-01	REFER TO RISER DIAGRAM	-	-	VFD	-	1,6
BWS-01	BELT WASH SYSTEM #1	DEWATERING BUILDING - MECHANICAL OPERATIONS ROOM	15.2	5	240	3	BPCP-01	REFER TO RISER DIAGRAM		BPCP-01	REFER TO RISER DIAGRAM	-	-	ATL	-	1
HU-01	HYDRAULIC UNIT #1 (E.T.R.)	DEWATERING BUILDING - MECHANICAL OPERATIONS ROOM	6.8	2	240	3	BPCP-01	REFER TO RISER DIAGRAM		BPCP-01	REFER TO RISER DIAGRAM	-	-	ATL	-	1
PFP-01	POLYMER FEED PUMP #1	DEWATERING BUILDING - MECHANICAL OPERATIONS ROOM	9.8	0.5	120	1	PFS-01	REFER TO RISER DIAGRAM		PFS-01	REFER TO RISER DIAGRAM	-	-	VFD	-	1,6
PFM-01	POLYMER FEED MIXER #1	DEWATERING BUILDING - MECHANICAL OPERATIONS ROOM	16	1	120	1	PFS-01	REFER TO RISER DIAGRAM		PFS-01	REFER TO RISER DIAGRAM	-	-	ATL	-	1
PFS-01	POLYMER FEED SYSTEM #1	DEWATERING BUILDING - MECHANICAL OPERATIONS ROOM	-	-	120	1	BPCP-01	REFER TO RISER DIAGRAM		BPCP-01	REFER TO RISER DIAGRAM	-	-	ATL	-	1
BPCP-01	BELT PRESS CONTROL PANEL #1 (E.R.E.)	DEWATERING BUILDING - MECHANICAL OPERATIONS ROOM	-	-	240	3	BP-LVP	100A/3P	(4)1/0 & #6G, 2"C.	R I/O -2	REFER TO RISER DIAGRAM	-	-	-	-	-

REFER TO SHEET E-047 FOR SCHEDULE CONTINUATION

MHE ENGINEERING
33 Airport Center Drive, Suite 202
New Windsor, NY 12553
(845) 567-3100
111 Wheatfield Drive, Suite 1
Milford, PA 18337
(570) 296-2765

BID ADDENDUM

JADE STONE ENGINEERING

STATE OF NEW YORK · JEFFREY E. ROBINSON · 095896 · LICENSED PROFESSIONAL ENGINEER

HAZARDOUS MATERIAL NOTE:
THE SERVICES PROVIDED BY MHE, INCLUDING ALL WORK DEPICTED ON MHE PLANS, DO NOT INCLUDE SERVICES RELATED TO THE IDENTIFICATION, CONTROLS OR HANDLING OF HAZARDOUS MATERIALS, INCLUDING SUCH MATERIALS AS ASBESTOS AND LEAD PAINT. ALL TESTING, IDENTIFICATION, ABATEMENT, CONTROLS, AND HANDLING OF HAZARDOUS MATERIALS SHALL BE UNDERTAKEN BY A HAZARDOUS MATERIAL CONSULTANT AND CERTIFIED PROFESSIONALS. IF SUCH MATERIALS HAVE BEEN IDENTIFIED, CONTRACTOR WILL COMMUNICATE DIRECTLY WITH HAZARDOUS MATERIAL PROFESSIONAL FOR THE PERFORMANCE OF ANY WORK ON OR ADJACENT TO SAID MATERIALS. IF UNIDENTIFIED MATERIALS OF CONCERN ARE ENCOUNTERED WHILE UNDERTAKING THE WORK SHOWN HEREON, CONTRACTOR SHALL IMMEDIATELY NOTIFY ENGINEER AND OWNER, AND SHALL OBTAIN DIRECTION FROM THE HAZARDOUS MATERIAL CONSULTANT PRIOR TO THE CONTINUATION OF WORK INVOLVING SUSPECTED MATERIAL.

UDIG·NY SAFE DIGGING STARTS HERE
CALL 811

UNAUTHORIZED ADDITION OR ALTERATION OF THIS PLAN IS A VIOLATION OF SECTION 7209(2) OF THE NEW YORK STATE EDUCATION LAW.

ALL PRODUCTION & INTELLECTUAL PROPERTY RIGHT RESERVED ©

CAESARS LANE WWTP EXPANSION PROJECT: PHASE 2
145 CAESARS LN.
NEW WINDSOR, NY 12553
FOR TOWN OF NEW WINDSOR
555 UNION AVE.
NEW WINDSOR, NY 12553

ELECTRICAL SCHEDULES

REVISIONS

NO.	DESCRIPTION	DATE

ISSUED DATE:	06 JUNE, 2025
DESIGN BY:	RRM
DRAWN BY:	CDJ
CHECKED BY:	MGR
REVIEWED BY:	JER

SHEET NO.
E-046

PROJECT # 18-732 PHASE #

INDICATED BY ⊘ ON PLAN SHEETS

EQUIPMENT CONNECTION SCHEDULE (SHEET 3 OF 4)

SPECIFIC NOTES:

1. WHEN LOCATION IS NOT REFERENCED ON 'E' SHEETS, REFER TO ASSOCIATED CONTRACT DRAWINGS.
2. LOCATIONS SHOWN ARE GENERAL IN NATURE. COORDINATE WITH ALL TRADE CONTRACTORS PRIOR TO ROUGH-IN.

DISCONNECT/SAFETY SWITCH — TYPES:
A: NON-FUSED
B: FUSED
M: MOTOR RATED SWITCH
R: RECEPTACLE/CORD/PLUG
N: NOT REQUIRED
C: CKT BREAKER WITHIN SIGHT

DISCONNECT/SAFETY SWITCH — SIZES:
AF: AMPERE FRAME
NF: NON-FUSED
AT: FUSE SIZE (RK5, UON)

STARTER — TYPES:
VFD: VARIABLE FREQUENCY DRIVE
CMS: COMBINATION MOTOR STARTER WITH DISCONNECT
ATL: ACROSS THE LINE, FVNR MAGNETIC STARTER
M: MOTOR RATED SWITCH - MANUAL STARTER
P: PACKAGED CONTROLLER BY MANUFACTURER
LVT: THERMOSTAT

EQUIPMENT			ELECTRICAL LOAD				POWER CONNECTION			CONTROL CONNECTION		DISCONNECT/SAFETY SWITCH		STARTER		REMARKS
EQUIPMENT TAG	EQUIPMENT TYPE	LOCATION ON PLAN	FLA	HP (KW)	V	PH	HOMERUN TO	CIRCUIT BREAKER	CONDUCTORS & CONDUIT	HOMERUN / INTERLOCK TO	CONDUCTORS & CONDUIT	DISCONNECT TYPE/SIZE	NEMA ENCLOSURE TYPE	STARTER TYPE	NEMA ENCLOSURE TYPE	
BPGD-02	GRAVITY DRIVE #2	DEWATERING BUILDING - MECHANICAL OPERATIONS ROOM	6	1.5	240	3	BPCP-02	REFER TO RISER DIAGRAM		BPCP-02	REFER TO RISER DIAGRAM	-	-	VFD	-	1,6
BDP-03	BELT PRESS DRIVE #3	DEWATERING BUILDING - MECHANICAL OPERATIONS ROOM	6	1.5	240	3	BPCP-02	REFER TO RISER DIAGRAM		BPCP-02	REFER TO RISER DIAGRAM	-	-	VFD	-	1,6
BDP-04	BELT PRESS DRIVE #4	DEWATERING BUILDING - MECHANICAL OPERATIONS ROOM	6	1.5	240	3	BPCP-02	REFER TO RISER DIAGRAM		BPCP-02	REFER TO RISER DIAGRAM	-	-	VFD	-	1,6
FD-02	FEEDBOX DRIVE #2	DEWATERING BUILDING - MECHANICAL OPERATIONS ROOM	2.2	1/3	240	3	BPCP-02	REFER TO RISER DIAGRAM		BPCP-02	REFER TO RISER DIAGRAM	-	-	VFD	-	1,6
BWS-02	BELT WASH SYSTEM #2	DEWATERING BUILDING - MECHANICAL OPERATIONS ROOM	15.2	5	240	3	BPCP-02	REFER TO RISER DIAGRAM		BPCP-02	REFER TO RISER DIAGRAM	-	-	ATL	-	1
HU-02	HYDRAULIC UNIT #2	DEWATERING BUILDING - MECHANICAL OPERATIONS ROOM	6.8	2	240	3	BPCP-02	REFER TO RISER DIAGRAM		BPCP-02	REFER TO RISER DIAGRAM	-	-	ATL	-	1
PFP-02	POLYMER FEED PUMP #2	DEWATERING BUILDING - MECHANICAL OPERATIONS ROOM	9.8	0.5	120	1	PFS-02	REFER TO RISER DIAGRAM		PFS-02	REFER TO RISER DIAGRAM	-	-	VFD	-	1,6
PFM-02	POLYMER FEED MIXER #2	DEWATERING BUILDING - MECHANICAL OPERATIONS ROOM	16	1	120	1	PFS-02	REFER TO RISER DIAGRAM		PFS-02	REFER TO RISER DIAGRAM	-	-	ATL	-	1
PFS-02	POLYMER FEED SYSTEM #2	DEWATERING BUILDING - MECHANICAL OPERATIONS ROOM	-	-	120	1	BPCP-02	REFER TO RISER DIAGRAM		BPCP-02	REFER TO RISER DIAGRAM	-	-	ATL	-	1
BPCP-02	BELT PRESS CONTROL PANEL #2	DEWATERING BUILDING - MECHANICAL OPERATIONS ROOM	-	-	240	3	BP-LVP	100A/3P	(4)1/0 & #6G, 2"C.	R I/O -2	REFER TO RISER DIAGRAM	-	-	-	-	-
DC-01	DISCHARGE CONVEYER	DEWATERING BUILDING - DUMPSTER AREA	22	7.5	240	3	CCP-01	REFER TO RISER DIAGRAM		CCP-01	REFER TO RISER DIAGRAM	A (60AF/NF)	4X	ATL	-	1
LOC-01	LOADOUT CONVEYER #1	DEWATERING BUILDING - DUMPSTER AREA	22	7.5	240	3	CCP-01	REFER TO RISER DIAGRAM		CCP-01	REFER TO RISER DIAGRAM	A (60AF/NF)	4X	ATL	-	1
LOC-02	LOADOUT CONVEYER #2	DEWATERING BUILDING - DUMPSTER AREA	22	7.5	240	3	CCP-01	REFER TO RISER DIAGRAM		CCP-01	REFER TO RISER DIAGRAM	A (60AF/NF)	4X	ATL	-	1
SGA-01	SLIDE GATE ACTUATOR #1	DEWATERING BUILDING - DUMPSTER AREA	4.4	FRACTIONAL	120	1	CCP-01	REFER TO RISER DIAGRAM		CCP-01	REFER TO RISER DIAGRAM	M	4X	ATL	-	1
SGA-02	SLIDE GATE ACTUATOR #2	DEWATERING BUILDING - DUMPSTER AREA	4.4	FRACTIONAL	120	1	CCP-01	REFER TO RISER DIAGRAM		CCP-01	REFER TO RISER DIAGRAM	M	4X	ATL	-	1
SGA-03	SLIDE GATE ACTUATOR #3	DEWATERING BUILDING - DUMPSTER AREA	4.4	FRACTIONAL	120	1	CCP-01	REFER TO RISER DIAGRAM		CCP-01	REFER TO RISER DIAGRAM	M	4X	ATL	-	1
SGA-04	SLIDE GATE ACTUATOR #4	DEWATERING BUILDING - DUMPSTER AREA	4.4	FRACTIONAL	120	1	CCP-01	REFER TO RISER DIAGRAM		CCP-01	REFER TO RISER DIAGRAM	M	4X	ATL	-	1
SGA-05	SLIDE GATE ACTUATOR #5	DEWATERING BUILDING - DUMPSTER AREA	4.4	FRACTIONAL	120	1	CCP-01	REFER TO RISER DIAGRAM		CCP-01	REFER TO RISER DIAGRAM	M	4X	ATL	-	1
SGA-06	SLIDE GATE ACTUATOR #6	DEWATERING BUILDING - DUMPSTER AREA	4.4	FRACTIONAL	120	1	CCP-01	REFER TO RISER DIAGRAM		CCP-01	REFER TO RISER DIAGRAM	M	4X	ATL	-	1
SGA-07	SLIDE GATE ACTUATOR #7	DEWATERING BUILDING - DUMPSTER AREA	4.4	FRACTIONAL	120	1	CCP-01	REFER TO RISER DIAGRAM		CCP-01	REFER TO RISER DIAGRAM	M	4X	ATL	-	1
CCP-01	CONVEYER CONTROL PANEL	DEWATERING BUILDING - MECHANICAL OPERATIONS ROOM	-	-	240	3	BP-LVP	100A/3P	(4)1/0 & #6G, 2"C.	R I/O -2	REFER TO RISER DIAGRAM	-	-	-	-	-
W-01	WINCH #1	DEWATERING BUILDING - DUMPSTER AREA	15.2	5	240	3	BP-LVP	30A/3P	(4)10 & #10G, 1"C.	LOCAL CONTROL ONLY		A (30AF/NF)	4X	P	-	-
W-02	WINCH #2	DEWATERING BUILDING - DUMPSTER AREA	15.2	5	240	3	BP-LVP	30A/3P	(4)10 & #10G, 1"C.	LOCAL CONTROL ONLY		A (30AF/NF)	4X	P	-	-
SP-700	SUMP PUMP #1	DEWATERING BUILDING - MECHANICAL ROOM	3.4	2	480	3	SPCP-700	REFER TO RISER DIAGRAM		SPCP-700	REFER TO RISER DIAGRAM	-	-	ATL	-	1
SP-701	SUMP PUMP #2	DEWATERING BUILDING - MECHANICAL ROOM	3.4	2	480	3	SPCP-700	REFER TO RISER DIAGRAM		SPCP-700	REFER TO RISER DIAGRAM	-	-	ATL	-	1
SPCP-700	SUMP PUMP CONTROL PANEL	DEWATERING BUILDING - MECHANICAL ROOM	-	-	480	3	HVP4	REFER TO SINGLE LINE DIAGRAM		R I/O-2	REFER TO RISER DIAGRAM	-	-	-	-	-
HVAC-700	HVAC MONITORING CONTROL PANEL	DEWATERING BUILDING - ELECTRICAL ROOM	-	-	120	1	LVP4	20A/1P	(2)#12 & #12G, 3/4"C.	R I/O-2	REFER TO RISER DIAGRAM	-	-	-	-	-
R I/O-2	REMOTE I/O PANEL #2	DEWATERING BUILDING - ELECTRICAL ROOM	-	-	120	1	LVP4	30A/1P	(2)#10 & #10G, 1"C.	R I/O-1	REFER TO RISER DIAGRAM	-	-	-	-	-
MBS-01	BAR SCREEN DRIVE #1 (E.T.N.)	HEADWORKS BUILDING - EXISTING BAR SCREEN ROOM	4.2	1	240	3	BS-CP-1	REFER TO RISER DIAGRAM		BS-CP-1	REFER TO RISER DIAGRAM	A (30AF/NF)	7	VFD	-	1,2,6,7
BSC-01	WASHER COMPACTOR #1 (E.T.N.)	HEADWORKS BUILDING - EXISTING BAR SCREEN ROOM	4.2	1	240	3	BS-CP-1	REFER TO RISER DIAGRAM		BS-CP-1	REFER TO RISER DIAGRAM	A (30AF/NF)	7	VFD	-	1,2,6,7
BS-CP-1	BAR SCREEN CONTROL PANEL (E.R.E.)	HEADWORKS BUILDING - ELECTRICAL ROOM	-	-	240	3	HVP3	REFER TO SINGLE LINE DIAGRAM		R I/O #3	REFER TO RISER DIAGRAM	-	-	-	-	-
MBS-02	MECHANICAL BAR SCREEN #2	HEADWORKS BUILDING - NEW BAR SCREEN ROOM	2.1	1	480	3	BS-CP-2	REFER TO RISER DIAGRAM		BS-CP-2	REFER TO RISER DIAGRAM	A (30AF/NF)	7	VFD	-	1,2,6,7
BSC-02	WASHER COMPACTOR #2	HEADWORKS BUILDING - NEW BAR SCREEN ROOM	2.1	1	480	3	BS-CP-2	REFER TO RISER DIAGRAM		BS-CP-2	REFER TO RISER DIAGRAM	A (30AF/NF)	7	VFD	-	1,2,6,7
BS-CP-2	BAR SCREEN CONTROL PANEL	HEADWORKS BUILDING - ELECTRICAL ROOM	-	-	480	3	HVP3	REFER TO SINGLE LINE DIAGRAM		R I/O #3	REFER TO RISER DIAGRAM	-	-	-	-	-
GRTPD-01	GRIT PROPELLER DRIVE #1	EXISTING GRIT CHAMBER	3	1.5	480	3	GRT-CP-01	REFER TO RISER DIAGRAM		GRT-CP-01	REFER TO RISER DIAGRAM	A (30AF/NF)	7	ATL	-	1,2
GRTP-01	GRIT PUMP #1	EXISTING GRIT CHAMBER	11	7.5	480	3	GRT-CP-01	REFER TO RISER DIAGRAM		GRT-CP-01	REFER TO RISER DIAGRAM	A (30AF/NF)	7	ATL	-	1,2
GRTW-01	GRIT WASHER #1	HEADWORKS BUILDING - NEW BAR SCREEN ROOM	4.8	3	480	3	GRT-CP-01	REFER TO RISER DIAGRAM		GRT-CP-01	REFER TO RISER DIAGRAM	A (30AF/NF)	7	ATL	-	1,2
GRT-CP-01	GRIT SYSTEM CONTROL PANEL	HEADWORKS BUILDING - ELECTRICAL ROOM	-	-	480	3	HVP3	REFER TO SINGLE LINE DIAGRAM		R I/O #3	REFER TO RISER DIAGRAM	-	-	-	-	-
GRTPD-02	GRIT PROPELLER DRIVE #2	NEW GRIT CHAMBER	3	1.5	480	3	GRT-CP-01	REFER TO RISER DIAGRAM		GRT-CP-01	REFER TO RISER DIAGRAM	A (30AF/NF)	7	ATL	-	1,2
GRTP-02	GRIT PUMP #2	NEW GRIT CHAMBER	11	7.5	480	3	GRT-CP-01	REFER TO RISER DIAGRAM		GRT-CP-01	REFER TO RISER DIAGRAM	A (30AF/NF)	7	ATL	-	1,2
GRTW-02	GRIT WASHER #2	HEADWORKS BUILDING - NEW BAR SCREEN ROOM	4.8	3	480	3	GRT-CP-01	REFER TO RISER DIAGRAM		GRT-CP-01	REFER TO RISER DIAGRAM	A (30AF/NF)	7	ATL	-	1,2
GRT-CP-02	GRIT SYSTEM CONTROL PANEL	HEADWORKS BUILDING - ELECTRICAL ROOM	-	-	480	3	HVP3	REFER TO SINGLE LINE DIAGRAM		R I/O #3	REFER TO RISER DIAGRAM	-	-	-	-	-
GSDCP-200	GAS DETECTION SYSTEM CONTROL PANEL	HEADWORKS BUILDING - ELECTRICAL ROOM	-	-	120	1	LVP3	30A/1P	(2)#10 & #10G, 1"C.	R I/O #3	REFER TO RISER DIAGRAM	-	-	-	-	-
OH-1	ELECTRIC OVERHEAD DOOR	ATAD BUILDING - EQUIPMENT ROOM	9.8	1	120	1	LVP5	20A/1P	(2)#12 & #12G, 3/4"C.	REFER TO TYPICAL OVERHEAD DOOR RISER DIAGRAM		A (30AF/NF)	4X	-	-	16
OH-2	ELECTRIC OVERHEAD DOOR	ATAD BUILDING - THICKENING ROOM	9.8	1	120	2	LVP5	20A/1P	(2)#12 & #12G, 3/4"C.	REFER TO TYPICAL OVERHEAD DOOR RISER DIAGRAM		A (30AF/NF)	4X	-	-	16
OH-3	ELECTRIC OVERHEAD DOOR	MBR BUILDING - BLOWER ROOM	9.8	1	120	3	LVP5	20A/1P	(2)#12 & #12G, 3/4"C.	REFER TO TYPICAL OVERHEAD DOOR RISER DIAGRAM		A (30AF/NF)	4X	-	-	16
OH-4	ELECTRIC OVERHEAD DOOR	MBR BUILDING - CASSETTE LAYDOWN AREA	9.8	1	120	4	LVP5	20A/1P	(2)#12 & #12G, 3/4"C.	REFER TO TYPICAL OVERHEAD DOOR RISER DIAGRAM		A (30AF/NF)	4X	-	-	16
OH-5	ELECTRIC OVERHEAD DOOR	DEWATERING BUILDING - DUMPSTER AREA	9.8	1	120	5	LVP5	20A/1P	(2)#12 & #12G, 3/4"C.	REFER TO TYPICAL OVERHEAD DOOR RISER DIAGRAM		A (30AF/NF)	4X	-	-	16
OH-6	ELECTRIC OVERHEAD DOOR	DEWATERING BUILDING - DUMPSTER AREA	9.8	1	120	6	LVP5	20A/1P	(2)#12 & #12G, 3/4"C.	REFER TO TYPICAL OVERHEAD DOOR RISER DIAGRAM		A (30AF/NF)	4X	-	-	16
OH-7	ELECTRIC OVERHEAD DOOR	DEWATERING BUILDING - MECHANICAL OPERATIONS ROOM	9.8	1	120	7	LVP5	20A/1P	(2)#12 & #12G, 3/4"C.	REFER TO TYPICAL OVERHEAD DOOR RISER DIAGRAM		A (30AF/NF)	4X	-	-	16
OH-8	ELECTRIC OVERHEAD DOOR	DEWATERING BUILDING - MECHANICAL OPERATIONS ROOM	9.8	1	120	8	LVP5	20A/1P	(2)#12 & #12G, 3/4"C.	REFER TO TYPICAL OVERHEAD DOOR RISER DIAGRAM		A (30AF/NF)	4X	-	-	16
OH-9	ELECTRIC OVERHEAD DOOR	GARAGE	9.8	1	120	9	LVP5	20A/1P	(2)#12 & #12G, 3/4"C.	REFER TO TYPICAL OVERHEAD DOOR RISER DIAGRAM		A (30AF/NF)	4X	-	-	16
OH-10	ELECTRIC OVERHEAD DOOR	GARAGE	9.8	1	120	10	LVP5	20A/1P	(2)#12 & #12G, 3/4"C.	REFER TO TYPICAL OVERHEAD DOOR RISER DIAGRAM		A (30AF/NF)	4X	-	-	16
OH-11	ELECTRIC OVERHEAD DOOR	GARAGE	9.8	1	120	11	LVP5	20A/1P	(2)#12 & #12G, 3/4"C.	REFER TO TYPICAL OVERHEAD DOOR RISER DIAGRAM		A (30AF/NF)	4X	-	-	16
EUH-200	ELECTRIC UNIT HEATER	HEADWORKS BUILDING - NEW BAR SCREEN ROOM	30.1	(25KW)	480	3	HVP3	50A/3P	(3)#6 & #10G, 1-1/2"C.	LOW VOLTAGE THERMOSTAT		A (60AF/NF)	7	LVT	7	2,10
EUH-201	ELECTRIC UNIT HEATER	HEADWORKS BUILDING - NEW BAR SCREEN ROOM	30.1	(25KW)	480	3	HVP3	50A/3P	(3)#6 & #10G, 1-1/2"C.	LOW VOLTAGE THERMOSTAT		A (60AF/NF)	7	LVT	7	2,10
EUH-202	ELECTRIC UNIT HEATER	HEADWORKS BUILDING - NEW BAR SCREEN ROOM	30.1	(25KW)	480	3	HVP3	50A/3P	(3)#6 & #10G, 1-1/2"C.	LOW VOLTAGE THERMOSTAT		A (60AF/NF)	7	LVT	7	2,10
EUH-203	ELECTRIC UNIT HEATER	HEADWORKS BUILDING - ELECTRICAL ROOM	4	(3.3KW)	480	3	HVP3	20A/3P	(3)#12 & #12G, 3/4"C.	LOW VOLTAGE THERMOSTAT		A	-	LVT	-	10,11
EUH-300	ELECTRIC UNIT HEATER	SLUDGE PIT	6.1	(5KW)	480	3	HVP1	20A/3P	(3)#12 & #12G, 3/4"C.	LOW VOLTAGE THERMOSTAT		A	-	LVT	-	10,11
EUH-301	ELECTRIC UNIT HEATER	SLUDGE CONTROL VALVE VAULT	8	(3KW)	208	3	LVP1	20A/3P	(3)#12 & #12G, 3/4"C.	LOW VOLTAGE THERMOSTAT		A	-	LVT	-	13
EUH-400	ELECTRIC UNIT HEATER	ATAD BUILDING - EQUIPMENT ROOM	24.1	(20KW)	480	3	HVP5	50A/3P	(3)#6 & #10G, 1-1/2"C.	LOW VOLTAGE THERMOSTAT		A	-	LVT	-	10,11
EUH-401	ELECTRIC UNIT HEATER	ATAD BUILDING - EQUIPMENT ROOM	24.1	(20KW)	480	3	HVP5	50A/3P	(3)#6 & #10G, 1-1/2"C.	LOW VOLTAGE THERMOSTAT		A	-	LVT	-	10,11
EUH-402	ELECTRIC UNIT HEATER	ATAD BUILDING - THICKENING ROOM	30.2	(25KW)	480	3	HVP5	50A/3P	(3)#6 & #10G, 1-1/2"C.	LOW VOLTAGE THERMOSTAT		A	-	LVT	-	10,11
EUH-403	ELECTRIC UNIT HEATER	ATAD BUILDING - ELECTRICAL ROOM	4	(3.3KW)	480	3	HVP5	20A/3P	(3)#12 & #12G, 3/4"C.	LOW VOLTAGE THERMOSTAT		A	-	LVT	-	10,11
EUH-500	ELECTRIC UNIT HEATER	MBR BUILDING - CHEMICAL SKID ROOM	12.1	(10KW)	480	3	HVP1	20A/3P	(3)#12 & #12G, 3/4"C.	LOW VOLTAGE THERMOSTAT		A	-	LVT	-	10,11,14
EUH-501	ELECTRIC UNIT HEATER	MBR BUILDING - SODIUM HYPOCHLORITE CHEM STORAGE RM 1	14	(5KW)	208	3	LVP1	30A/3P	(3)#10 & #10G, 1"C.	LOW VOLTAGE THERMOSTAT		A	-	LVT	-	13,14
EUH-502	ELECTRIC UNIT HEATER	MBR BUILDING - SODIUM HYDROXIDE CHEM STORAGE RM 2	14	(5KW)	208	3	LVP1	30A/3P	(3)#10 & #10G, 1"C.	LOW VOLTAGE THERMOSTAT		A	-	LVT	-	13,14
EUH-503	ELECTRIC UNIT HEATER	MBR BUILDING - SODIUM HYDROXIDE CHEM STORAGE RM 3	14	(5KW)	208	3	LVP1	30A/3P	(3)#10 & #10G, 1"C.	LOW VOLTAGE THERMOSTAT		A	-	LVT	-	13,14
EUH-504	ELECTRIC UNIT HEATER	MBR BUILDING - BLOWER ROOM	12.1	(10KW)	480	3	HVP1	20A/3P	(3)#12 & #12G, 3/4"C.	LOW VOLTAGE THERMOSTAT		A	-	LVT	-	10,11
EUH-505	ELECTRIC UNIT HEATER	MBR BUILDING - BLOWER ROOM	12.1	(10KW)	480	3	HVP1	20A/3P	(3)#12 & #12G, 3/4"C.	LOW VOLTAGE THERMOSTAT		A	-	LVT	-	10,11
EUH-506	ELECTRIC UNIT HEATER	MBR BUILDING - 1ST FLOOR ELECTRICAL ROOM	14	(5KW)	208	3	LVP1	30A/3P	(3)#10 & #10G, 1"C.	LOW VOLTAGE THERMOSTAT		A	-	LVT	-	13
EUH-507	ELECTRIC UNIT HEATER	MBR BUILDING - RAS PUMP ROOM	30.2	(25KW)	480	3	HVP5	50A/3P	(3)#6 & #10G, 1-1/2"C.	LOW VOLTAGE THERMOSTAT		A	-	LVT	-	10,11
EUH-508	ELECTRIC UNIT HEATER	MBR BUILDING - RAS PUMP ROOM	30.2	(25KW)	480	3	HVP5	50A/3P	(3)#6 & #10G, 1-1/2"C.	LOW VOLTAGE THERMOSTAT		A	-	LVT	-	10,11
EUH-509	ELECTRIC UNIT HEATER	MBR BUILDING - RAS PUMP ROOM	30.2	(25KW)	480	3	HVP5	50A/3P	(3)#6 & #10G, 1-1/2"C.	LOW VOLTAGE THERMOSTAT		A	-	LVT	-	10,11
EUH-510	ELECTRIC UNIT HEATER	MBR BUILDING - 2ND FLOOR ELECTRICAL ROOM	8.3	(3KW)	208	3	LVP1	20A/3P	(3)#12 & #12G, 3/4"C.	LOW VOLTAGE THERMOSTAT		A	-	LVT	-	13
EUH-511	ELECTRIC UNIT HEATER	MBR BUILDING - STORAGE ROOM	14	(5KW)	208	3	LVP1	30A/3P	(3)#10 & #10G, 1"C.	LOW VOLTAGE THERMOSTAT		A	-	LVT	-	13
EUH-512	ELECTRIC UNIT HEATER	MBR BUILDING - MECHANICAL ROOM	11.1	(4KW)	208	3	LVP1	20A/3P	(3)#12 & #12G, 3/4"C.	LOW VOLTAGE THERMOSTAT		A	-	LVT	-	13
EUH-513	ELECTRIC UNIT HEATER	MBR BUILDING - CASSETTE LAYDOWN AREA	30.2	(25KW)	480	3	HVP5	50A/3P	(3)#6 & #10G, 1-1/2"C.	LOW VOLTAGE THERMOSTAT		A	-	LVT	-	10,11
EUH-514	ELECTRIC UNIT HEATER	MBR BUILDING - SCUM PUMP AREA	30.2	(25KW)	480	3	HVP5	50A/3P	(3)#6 & #10G, 1-1/2"C.	LOW VOLTAGE THERMOSTAT		A	-	LVT	-	10,11
EUH-515	ELECTRIC UNIT HEATER	MBR BUILDING - MEMBRANE AREA	30.2	(25KW)	480	3	HVP5	50A/3P	(3)#6 & #10G, 1-1/2"C.	LOW VOLTAGE THERMOSTAT		A	-	LVT	-	10,11
EUH-516	ELECTRIC UNIT HEATER	MBR BUILDING - MEMBRANE AREA	30.2	(25KW)	480	3	HVP5	50A/3P	(3)#6 & #10G, 1-1/2"C.	LOW VOLTAGE THERMOSTAT		A	-	LVT	-	10,11
EUH-517	ELECTRIC UNIT HEATER	MICROSCREEN BUILDING	18.1	(15KW)	480	3	HVP6	30A/3P	(3)#10 & #10G, 1"C.	LOW VOLTAGE THERMOSTAT		A	-	LVT	-	10,11
EUH-518	ELECTRIC UNIT HEATER	MICROSCREEN BUILDING	18.1	(15KW)	480	3	HVP6	30A/3P	(3)#10 & #10G, 1"C.	LOW VOLTAGE THERMOSTAT		A	-	LVT	-	10,11
EUH-519	ELECTRIC UNIT HEATER	MBR BUILDING - ELEVATED OFFICE	14	(5KW)	208	3	LVP1	30A/3P	(3)#10 & #10G, 1"C.	LOW VOLTAGE THERMOSTAT		A	-	LVT	-	13
EUH-520	ELECTRIC UNIT HEATER	MICROSCREEN BUILDING	18.1	(15KW)	480	3	HVP6	30A/3P	(3)#10 & #10G, 1"C.	LOW VOLTAGE THERMOSTAT		A	-	LVT	-	10,11
EUH-950	ELECTRIC UNIT HEATER	GARAGE	18.1	(15KW)	480	3	HVP6	30A/3P	(3)#10 & #10G, 1"C.	LOW VOLTAGE THERMOSTAT		A	-	LVT	-	10,11
EUH-951	ELECTRIC UNIT HEATER	GARAGE	18.1	(15KW)	480	3	HVP6	30A/3P	(3)#10 & #10G, 1"C.	LOW VOLTAGE THERMOSTAT		A	-	LVT	-	10,11

REFER TO SHEET E-048 FOR SCHEDULE CONTINUATION

MHE ENGINEERING
33 Airport Center Drive, Suite 202
New Windsor, NY 12553
(845) 567-3100
111 Wheatfield Drive, Suite 1
Milford, PA 18337
(570) 296-2765

BID ADDENDUM

JADE STONE ENGINEERING

STATE OF NEW YORK — JEFFREY E. ROBINSON — 095896 — LICENSED PROFESSIONAL ENGINEER

HAZARDOUS MATERIAL NOTE:
THE SERVICES PROVIDED BY MHE, INCLUDING ALL WORK DEPICTED ON MHE PLANS, DO NOT INCLUDE SERVICES RELATED TO THE IDENTIFICATION, CONTROLS OR HANDLING OF HAZARDOUS MATERIALS, INCLUDING SUCH MATERIALS AS ASBESTOS AND LEAD PAINT. ALL TESTING, IDENTIFICATION, ABATEMENT, CONTROLS, AND HANDLING OF HAZARDOUS MATERIALS SHALL BE UNDERTAKEN BY A HAZARDOUS MATERIAL CONSULTANT AND CERTIFIED PROFESSIONALS. IF SUCH MATERIALS HAVE BEEN IDENTIFIED, CONTRACTOR WILL COMMUNICATE DIRECTLY WITH HAZARDOUS MATERIAL PROFESSIONAL FOR THE PERFORMANCE OF ANY WORK ON OR ADJACENT TO SAID MATERIALS. IF UNIDENTIFIED MATERIALS OF CONCERN ARE ENCOUNTERED WHILE UNDERTAKING THE WORK SHOWN HEREON, CONTRACTOR SHALL IMMEDIATELY NOTIFY ENGINEER AND OWNER, AND SHALL OBTAIN DIRECTION FROM THE HAZARDOUS MATERIAL CONSULTANT PRIOR TO THE CONTINUATION OF WORK INVOLVING SUSPECTED MATERIAL.

UDIG·NY SAFE DIGGING STARTS HERE CALL 811

UNAUTHORIZED ADDITION OR ALTERATION OF THIS PLAN IS A VIOLATION OF SECTION 7209(2) OF THE NEW YORK STATE EDUCATION LAW.

ALL PRODUCTION & INTELLECTUAL PROPERTY RIGHT RESERVED ©

CAESARS LANE WWTP EXPANSION PROJECT: PHASE 2
145 CAESARS LN.
NEW WINDSOR, NY 12553
FOR TOWN OF NEW WINDSOR
555 UNION AVE.
NEW WINDSOR, NY 12553

ELECTRICAL SCHEDULES

REVISIONS

NO.	DESCRIPTION	DATE

ISSUED DATE:	06 JUNE, 2025
DESIGN BY:	RRM
DRAWN BY:	CDJ
CHECKED BY:	MGR
REVIEWED BY:	JER

SHEET NO.
E-047

PROJECT # 18-732 PHASE #

INDICATED BY ⟨S⟩ ON PLAN SHEETS

EQUIPMENT CONNECTION SCHEDULE (SHEET 4 OF 4)

SPECIFIC NOTES:

1. WHEN LOCATION IS NOT REFERENCED ON 'E' SHEETS, REFER TO ASSOCIATED CONTRACT DRAWINGS.
2. LOCATIONS SHOWN ARE GENERAL IN NATURE. COORDINATE WITH ALL TRADE CONTRACTORS PRIOR TO ROUGH-IN.

DISCONNECT/SAFETY SWITCH — TYPES:
A: NON-FUSED
B: FUSED
M: MOTOR RATED SWITCH
R: RECEPTACLE/CORD/PLUG
N: NOT REQUIRED
C: CKT BREAKER WITHIN SIGHT

DISCONNECT/SAFETY SWITCH — SIZES:
AF: AMPERE FRAME
NF: NON-FUSED
AT: FUSE SIZE (RK5, UON)

STARTER — TYPES:
VFD: VARIABLE FREQUENCY DRIVE
CMS: COMBINATION MOTOR STARTER WITH DISCONNECT
ATL: ACROSS THE LINE, FVNR MAGNETIC STARTER
M: MOTOR RATED SWITCH - MANUAL STARTER
P: PACKAGED CONTROLLER BY MANUFACTURER
LVT: THERMOSTAT

EQUIPMENT			ELECTRICAL LOAD				POWER CONNECTION			CONTROL CONNECTION		DISCONNECT/SAFETY SWITCH		STARTER		REMARKS
EQUIPMENT TAG	EQUIPMENT TYPE	LOCATION ON PLAN	FLA	HP (KW)	V	PH	HOMERUN TO	CIRCUIT BREAKER	CONDUCTORS & CONDUIT	HOMERUN / INTERLOCK TO	CONDUCTORS & CONDUIT	DISCONNECT TYPE/SIZE	NEMA ENCLOSURE TYPE	STARTER TYPE	NEMA ENCLOSURE TYPE	
EF-200	EXHAUST FAN	HEADWORKS BUILDING - NEW BAR SCREEN ROOM	9.8	1/2	120	1	LVP3	20A/1P	(2)#12 & #12G, 3/4"C.	CONTINUOUS OPERATION		A (30AF/NF)	7	-	-	2,8
EF-201	EXHAUST FAN	HEADWORKS BUILDING - ELECTRICAL ROOM	4.4	1/10	120	1	LVP3	20A/1P	(2)#12 & #12G, 3/4"C.	LINE VOLTAGE REVERSE ACTING THERMOSTAT		A	1	HOA	1	8,9
EF-300	EXHAUST FAN	SLUDGE PIT	4.4	1/15	120	1	LVP1	20A/1P	(2)#12 & #12G, 3/4"C.	CONTINUOUS OPERATION		A	4X	M	4X	11,12
EF-301	EXHAUST FAN	SLUDGE CONTROL VALVE VAULT	4.4	1/10	120	1	LVP1	20A/1P	(2)#12 & #12G, 3/4"C.	INTERLOCK WITH SPACE LIGHTING		A	4X	M	4X	11
EF-400	EXHAUST FAN	ATAD BUILDING - EQUIPMENT ROOM	7.6	3/4	208	1	LVP5	20A/2P	(2)#12 & #12G, 3/4"C.	LINE VOLTAGE REVERSE ACTING THERMOSTAT		A	4X	HOA	4X	8,9
EF-401	EXHAUST FAN	ATAD BUILDING - THICKENING ROOM	5.8	1/4	120	1	LVP5	20A/1P	(2)#12 & #12G, 3/4"C.	CONTINUOUS OPERATION		A	4X	M	4X	8,9
EF-500	EXHAUST FAN	MBR BUILDING - SODIUM HYDROXIDE CHEM STORAGE ROOM 3	4.4	1/6	120	1	LVP1	20A/1P	(2)#12 & #12G, 3/4"C.	CONTINUOUS OPERATION		A	4X	-	-	8,9,14
EF-501	EXHAUST FAN	MBR BUILDING - RAS PUMP ROOM	13.2	2	208	1	LVP1	30A/2P	(2)#10 & #10G, 1"C.	CONTINUOUS OPERATION		A	4X	-	-	8,9,12
EF-502	EXHAUST FAN	MBR BUILDING - BLOWER ROOM	13.2	2	208	1	LVP1	30A/2P	(2)#10 & #10G, 1"C.	LINE VOLTAGE REVERSE ACTING THERMOSTAT		A	4X	HOA	4X	8,9,12
EF-503	EXHAUST FAN	MBR BUILDING - BLOWER ROOM	13.2	2	208	1	LVP1	30A/2P	(2)#10 & #10G, 1"C.	LINE VOLTAGE REVERSE ACTING THERMOSTAT		A	4X	HOA	4X	8,9,12
EF-504	EXHAUST FAN	MBR BUILDING - 2ND FLOOR ELECTRICAL ROOM	1	(121W)	120	1	LVP1	20A/1P	(2)#12 & #12G, 3/4"C.	LINE VOLTAGE REVERSE ACTING THERMOSTAT		A	1	HOA	1	8,9
EF-505	EXHAUST FAN	MBR BUILDING - MEMBRANE ZONE	7.6	3/4	208	1	LVP1	20A/1P	(2)#12 & #12G, 3/4"C.	LINE VOLTAGE REVERSE ACTING THERMOSTAT		A	4X	HOA	4X	8,9,12
EF-506	EXHAUST FAN	MBR BUILDING - MEMBRANE ZONE	7.6	3/4	208	1	LVP1	20A/1P	(2)#12 & #12G, 3/4"C.	LINE VOLTAGE REVERSE ACTING THERMOSTAT		A	4X	HOA	4X	8,9,12
EF-507	EXHAUST FAN	MBR BUILDING - MEMBRANE ZONE	7.6	3/4	208	1	LVP1	20A/1P	(2)#12 & #12G, 3/4"C.	LINE VOLTAGE REVERSE ACTING THERMOSTAT		A	4X	HOA	4X	8,9,12
EF-508	EXHAUST FAN	MBR BUILDING - MEMBRANE ZONE	7.6	3/4	208	1	LVP1	20A/2P	(2)#12 & #12G, 3/4"C.	LINE VOLTAGE REVERSE ACTING THERMOSTAT		A	4X	HOA	4X	8,9,12
EF-509	EXHAUST FAN	MICROSCREEN BUILDING	5.8	1/4	120	1	LVP6	20A/1P	(2)#12 & #12G, 3/4"C.	LINE VOLTAGE REVERSE ACTING THERMOSTAT		A	4X	HOA	4X	8,9
EF-510	EXHAUST FAN	INFLUENT DRYWELL	4.4	1/10	120	1	LVP1	20A/1P	(2)#12 & #12G, 3/4"C.	CONTINUOUS OPERATION		A	4X	M	4X	11,12
EF-700	EXHAUST FAN	DEWATERING BUILDING - MECHANICAL OPERATIONS ROOM	7.6	3/4	208	1	LVP4	20A/2P	(2)#12 & #12G, 3/4"C.	CONTINUOUS OPERATION		A	4X	-	-	8,9
EF-701	EXHAUST FAN	DEWATERING BUILDING - MECHANICAL OPERATIONS ROOM	7.6	3/4	208	1	LVP4	20A/2P	(2)#12 & #12G, 3/4"C.	CONTINUOUS OPERATION		A	4X	-	-	8,9
EF-702	EXHAUST FAN	DEWATERING BUILDING - LOCKER ROOMS	4.4	1/8	120	1	LVP4	20A/1P	(2)#12 & #12G, 3/4"C.	CONTINUOUS OPERATION		A	4X	-	-	8,9,12
EF-950	EXHAUST FAN	GARAGE	9.8	1/2	120	1	LVP7	20A/1P	(2)#12 & #12G, 3/4"C.	CO/NO2 DETECTION SYSTEM WITH ON/AUTO SELECTOR SWITCH		A	4X	ON/AUTO	4X	8,9,12,15
SF-200	SUPPLY FAN	HEADWORKS BUILDING - NEW BAR SCREEN ROOM	9.8	1/2	120	1	LVP3	20A/1P	(2)#12 & #12G, 3/4"C.	CONTINUOUS OPERATION		A (30AF/NF)	7	-	-	2,8
SF-400	SUPPLY FAN	ATAD BUILDING - THICKENING ROOM	5.8	1/4	120	1	LVP5	20A/1P	(2)#12 & #12G, 3/4"C.	CONTINUOUS OPERATION / INTERCONNECT W/ EF-401		A	4X	M	4X	8,9
SF-500	SUPPLY FAN	MBR BUILDING - RAS PUMP ROOM	13.8	3/4	120	1	LVP1	30A/1P	(2)#10 & #10G, 1"C.	CONTINUOUS OPERATION		A	4X	-	-	8,9,12
SF-700	SUPPLY FAN	DEWATERING BUILDING - DUMPSTER AREA	9.8	1/2	120	1	LVP4	20A/1P	(2)#12 & #12G, 3/4"C.	CONTINUOUS OPERATION		A	4X	-	-	8,9,12
SF-701	SUPPLY FAN	DEWATERING BUILDING - DUMPSTER AREA	9.8	1/2	120	2	LVP4	20A/1P	(2)#12 & #12G, 3/4"C.	CONTINUOUS OPERATION		A	4X	-	-	8,9,12
LV-202	LOUVER W/MOTORIZED DAMPER	HEADWORKS BUILDING - ELECTRICAL ROOM	4.4	-	120	1	LVP3	20A/1P	(2)#12 & #12G, 3/4"C.	INTERLOCK W/ EXHAUST FAN EF-201		-	-	-	-	8
LV-203	LOUVER W/MOTORIZED DAMPER	HEADWORKS BUILDING - ELECTRICAL ROOM	4.4	-	120	1	LVP3	20A/1P	(2)#12 & #12G, 3/4"C.	INTERLOCK W/ EXHAUST FAN EF-201		-	-	-	-	8
LV-400	LOUVER W/MOTORIZED DAMPER	ATAD BUILDING - EQUIPMENT ROOM	4.4	-	120	1	LVP5	20A/1P	(2)#12 & #12G, 3/4"C.	INTERLOCK W/ EXHAUST FAN EF-400		-	-	-	-	8
LV-401	LOUVER W/MOTORIZED DAMPER	ATAD BUILDING - THICKENING ROOM	4.4	-	120	1	LVP5	20A/1P	(2)#12 & #12G, 3/4"C.	INTERLOCK W/ EXHAUST FAN EF-401		-	-	-	-	8
LV-402	LOUVER W/MOTORIZED DAMPER	ATAD BUILDING - THICKENING ROOM	4.4	-	120	1	LVP5	20A/1P	(2)#12 & #12G, 3/4"C.	INTERLOCK W/ SUPPLY FAN SF-400		-	-	-	-	8
LV-502	LOUVER W/MOTORIZED DAMPER	MBR BUILDING - BLOWER ROOM	4.4	-	120	1	LVP1	20A/1P	(2)#12 & #12G, 3/4"C.	INTERLOCK W/ EXHAUST FAN EF-502		-	-	-	-	8
LV-503	LOUVER W/MOTORIZED DAMPER	MBR BUILDING - BLOWER ROOM	4.4	-	120	1	LVP1	20A/1P	(2)#12 & #12G, 3/4"C.	INTERLOCK W/ EXHAUST FAN EF-503		-	-	-	-	8
LV-504	LOUVER W/MOTORIZED DAMPER	MBR BUILDING - 2ND FLOOR ELECTRICAL ROOM	4.4	-	120	1	LVP1	20A/1P	(2)#12 & #12G, 3/4"C.	INTERLOCK W/ EXHAUST FAN EF-504		-	-	-	-	8
LV-505	LOUVER W/MOTORIZED DAMPER	MBR BUILDING - 2ND FLOOR ELECTRICAL ROOM	4.4	-	120	1	LVP1	20A/1P	(2)#12 & #12G, 3/4"C.	INTERLOCK W/ EXHAUST FAN EF-504		-	-	-	-	8
LV-506	LOUVER W/MOTORIZED DAMPER	MBR BUILDING - CASSETTE LAYDOWN AREA	4.4	-	120	1	LVP1	20A/1P	(2)#12 & #12G, 3/4"C.	INTERLOCK W/ EXHAUST FAN EF-505 & EF-506		-	-	-	-	8
LV-507	LOUVER W/MOTORIZED DAMPER	MBR BUILDING - CASSETTE LAYDOWN AREA	4.4	-	120	1	LVP1	20A/1P	(2)#12 & #12G, 3/4"C.	INTERLOCK W/ EXHAUST FAN EF-507 & EF-508		-	-	-	-	8
LV-508	LOUVER W/MOTORIZED DAMPER	MICROSCREEN BUILDING	4.4	-	120	1	LVP1	20A/1P	(2)#12 & #12G, 3/4"C.	INTERLOCK W/ EXHAUST FAN EF-509		-	-	-	-	8
LV-509	LOUVER W/MOTORIZED DAMPER	MICROSCREEN BUILDING	4.4	-	120	1	LVP1	20A/1P	(2)#12 & #12G, 3/4"C.	INTERLOCK W/ EXHAUST FAN EF-509		-	-	-	-	8
LV-700	LOUVER W/MOTORIZED DAMPER	DEWATERING BUILDING - MECHANICAL OPERATIONS ROOM	4.4	-	120	1	LVP4	20A/1P	(2)#12 & #12G, 3/4"C.	INTERLOCK W/ EXHAUST FAN EF-700		-	-	-	-	8
LV-701	LOUVER W/MOTORIZED DAMPER	DEWATERING BUILDING - MECHANICAL OPERATIONS ROOM	4.4	-	120	1	LVP4	20A/1P	(2)#12 & #12G, 3/4"C.	INTERLOCK W/ EXHAUST FAN EF-701		-	-	-	-	8
LV-950	LOUVER W/MOTORIZED DAMPER	GARAGE	4.4	-	120	1	LVP2	20A/1P	(2)#12 & #12G, 3/4"C.	INTERLOCK W/ EXHAUST FAN EF-901		-	-	-	-	8
SRV-300	ROOF VENTILATOR W/ MOTORIZED DAMPER	SLUDGE PIT	4.4	-	120	1	LVP1	20A/1P	(2)#12 & #12G, 3/4"C.	INTERLOCK W/ EXHAUST FAN EF-300		-	-	-	-	8
SRV-400	ROOF VENTILATOR W/ MOTORIZED DAMPER	ATAD BUILDING - EQUIPMENT ROOM	4.4	-	120	1	LVP1	20A/1P	(2)#12 & #12G, 3/4"C.	INTERLOCK W/ EXHAUST FAN EF-400		-	-	-	-	8
SRV-500	ROOF VENTILATOR W/ MOTORIZED DAMPER	INFLUENT DRYWELL	4.4	-	120	1	LVP1	20A/1P	(2)#12 & #12G, 3/4"C.	INTERLOCK W/ EXHAUST FAN EF-510		-	-	-	-	8
HUH-700	HYDRONIC UNIT HEATER	DEWATERING BUILDING - SHOP	4.4	FRACTIONAL	120	1	LVP4	20A/1P	(2)#12 & #12G, 3/4"C.	LINE VOLTAGE THERMOSTAT		M	4X	LVT	-	10
HUH-701	HYDRONIC UNIT HEATER	DEWATERING BUILDING - MECHANICAL ROOM	4.4	1/12	120	1	LVP4	20A/1P	(2)#12 & #12G, 3/4"C.	LINE VOLTAGE THERMOSTAT		M	4X	LVT	-	10
HUH-702	HYDRONIC UNIT HEATER	DEWATERING BUILDING - MECHANICAL ROOM	4.4	1/12	120	1	LVP4	20A/1P	(2)#12 & #12G, 3/4"C.	LINE VOLTAGE THERMOSTAT		M	4X	LVT	-	10
HUH-703	HYDRONIC UNIT HEATER	DEWATERING BUILDING - STORAGE	4.4	FRACTIONAL	120	1	LVP4	20A/1P	(2)#12 & #12G, 3/4"C.	LINE VOLTAGE THERMOSTAT		M	4X	LVT	-	10
HUH-704	HYDRONIC UNIT HEATER	DEWATERING BUILDING -DUMPSTER AREA	4.4	1/12	120	1	LVP4	20A/1P	(2)#12 & #12G, 3/4"C.	LINE VOLTAGE THERMOSTAT		M	4X	LVT	-	10
HUH-705	HYDRONIC UNIT HEATER	DEWATERING BUILDING -DUMPSTER AREA	4.4	1/12	120	1	LVP4	20A/1P	(2)#12 & #12G, 3/4"C.	LINE VOLTAGE THERMOSTAT		M	4X	LVT	-	10
HUH-706	HYDRONIC UNIT HEATER	DEWATERING BUILDING - MECHANICAL OPERATIONS ROOM	7.2	1/3	120	1	LVP4	20A/1P	(2)#12 & #12G, 3/4"C.	LINE VOLTAGE THERMOSTAT		M	4X	LVT	-	10
HUH-707	HYDRONIC UNIT HEATER	DEWATERING BUILDING - MECHANICAL OPERATIONS ROOM	7.2	1/3	120	1	LVP4	20A/1P	(2)#12 & #12G, 3/4"C.	LINE VOLTAGE THERMOSTAT		M	4X	LVT	-	10
B-700	BOILER	DEWATERING BUILDING - MECHANICAL ROOM	20	-	120	1	LVP4	20A/1P	(2)#12 & #12G, 3/4"C.	REFER TO SUBMITTAL DOCUMENTATION		M	1	P	-	8
B-701	BOILER	DEWATERING BUILDING - MECHANICAL ROOM	20	-	120	1	LVP4	20A/1P	(2)#12 & #12G, 3/4"C.	REFER TO SUBMITTAL DOCUMENTATION		M	1	P	-	8
P-700	CIRCULATION PUMP	DEWATERING BUILDING - MECHANICAL ROOM	3.4	2	480	3	HVP4	20A/3P	(3)#12 & #12G, 3/4"C.	REFER TO SUBMITTAL DOCUMENTATION		A (30AF/NF)	1	VFD	1	6,8
P-701	CIRCULATION PUMP	DEWATERING BUILDING - MECHANICAL ROOM	3.4	2	480	3	HVP4	20A/3P	(3)#12 & #12G, 3/4"C.	REFER TO SUBMITTAL DOCUMENTATION		A (30AF/NF)	1	VFD	1	6,8
BP-700	BOILER PUMP	DEWATERING BUILDING - MECHANICAL ROOM	1.1	1	480	3	HVP4	20A/3P	(3)#12 & #12G, 3/4"C.	REFER TO SUBMITTAL DOCUMENTATION		A (30AF/NF)	1	CMS	1	8
BP-701	BOILER PUMP	DEWATERING BUILDING - MECHANICAL ROOM	1.1	1	480	3	HVP4	20A/3P	(3)#12 & #12G, 3/4"C.	REFER TO SUBMITTAL DOCUMENTATION		A (30AF/NF)	1	CMS	1	8
F-700	FURNACE	DEWATERING BUILDING - MECHANICAL ROOM	12.8	-	120	1	LVP4	20A/1P	(2)#12 & #12G, 3/4"C.	REFER TO SUBMITTAL DOCUMENTATION		M	1	P	-	10
DSCU-400	DUCTLESS SPLIT SYSTEM	ATAD BUILDING - ROOF	30	-	208	1	LVP5	30A/2P	(2)#10 & #10G, 1"C.	REFER TO SUBMITTAL DOCUMENTATION		A (30AF/NF)	4X	P	-	8
DSCU-500	DUCTLESS SPLIT SYSTEM	MBR BUILDING EXTERIOR WALL	20	-	208	1	LVP1	20A/2P	(2)#12 & #12G, 3/4"C.	REFER TO SUBMITTAL DOCUMENTATION		A (30AF/NF)	4X	P	-	8
DSCU-700	DUCTLESS SPLIT SYSTEM	DEWATERING BUILDING - ROOF	20	-	208	1	LVP4	20A/2P	(2)#12 & #12G, 3/4"C.	REFER TO SUBMITTAL DOCUMENTATION		A (30AF/NF)	4X	P	-	8
DSCU-701	DUCTLESS SPLIT SYSTEM	DEWATERING BUILDING - ROOF	20	-	208	1	LVP4	20A/2P	(2)#12 & #12G, 3/4"C.	REFER TO SUBMITTAL DOCUMENTATION		A (30AF/NF)	4X	P	-	8
DSCU-702	DUCTLESS SPLIT SYSTEM	DEWATERING BUILDING - ROOF	50	-	208	1	LVP4	50A/2P	(2)#6 & #10G, 1-1/2"C.	REFER TO SUBMITTAL DOCUMENTATION		A (60AF/NF)	4X	P	-	8
EWH-400	ELECTRIC WATER HEATER	ATAD BUILDING - THICKENING ROOM	14.4	(12KW)	480	3	HVP5	30A/3P	(3)#10 & #10G, 1"C.	REFER TO SUBMITTAL DOCUMENTATION		A (30AF/NF)	4X	P	-	8
EWH-500	ELECTRIC WATER HEATER	MBR BUILDING - MECHANICAL ROOM	14.4	(12KW)	480	3	HVP5	30A/3P	(3)#10 & #10G, 1"C.	REFER TO SUBMITTAL DOCUMENTATION		A (30AF/NF)	4X	P	-	8
EWH-501	ELECTRIC WATER HEATER	MBR BUILDING - SCUM PUMP AREA	20.8	(2.5KW)	120	1	LVP1	30A/1P	(2)#10 & #10G, 1"C.	REFER TO SUBMITTAL DOCUMENTATION		A (30AF/NF)	4X	P	-	8
EWH-950	ELECTRIC WATER HEATER	GARAGE	11.7	(1.4KW)	120	1	LVP7	20A/1P	(2)#12 & #12G, 3/4"C.	REFER TO SUBMITTAL DOCUMENTATION		A (30AF/NF)	4X	P	-	8
WH-700	GAS WATER HEATER	DEWATERING BUILDING - MECHANICAL ROOM	15	-	120	1	LVP4	20A/1P	(2)#12 & #12G, 3/4"C.	REFER TO SUBMITTAL DOCUMENTATION		M	4X	P	-	8
RCP-500	CIRCULATION PUMP	MBR BUILDING - MECHANICAL ROOM	7.2	1/3	120	1	LVP1	20A/1P	(2)#12 & #12G, 3/4"C.	REFER TO SUBMITTAL DOCUMENTATION		M	4X	P	-	8
RCP-700	CIRCULATION PUMP	DEWATERING BUILDING - MECHANICAL ROOM	4.4	1/12	120	1	LVP1	20A/1P	(2)#12 & #12G, 3/4"C.	REFER TO SUBMITTAL DOCUMENTATION		M	4X	P	-	8

GENERAL SCHEDULE NOTES:

1. CONTRACTOR TO INSTALL STARTER/DISCONNECT ADJACENT TO UNIT, UNLESS OTHERWISE INDICATED. INSTALLATION TO COMPLY WITH NEC ARTICLE 110.26. CONTRACTOR TO PROVIDE ALL NECESSARY STAINLESS STEEL MOUNTING HARDWARE/EQUIPMENT. REFER TO INSTALLATION DETAILS FOR ADDITIONAL INFORMATION. COORDINATE FINAL LOCATIONS WITH ALL TRADE CONTRACTORS PRIOR TO ROUGH-IN.
2. EQUIPMENT FURNISHED BY OTHERS (UNLESS OTHERWISE INDICATED ON DRAWINGS). COORDINATE WITH ASSOCIATED TRADE CONTRACTOR.
3. CONFIRM HP, VOLTAGE, AND PHASE CONNECTIONS PRIOR TO ROUGH-IN OF EQUIPMENT. COORDINATION REQUIRED BETWEEN TRADES.
4. STARTERS SHALL BE NEMA STYLE AND SIZED BASED ON ELECTRICAL LOAD DATA LISTED ON SCHEDULE.
5. MOTOR RATED SWITCHES SHALL BE EQUIPPED WITH HEATERS, WHICH SHALL BE SIZED BASED ON NAMEPLATE DATA (TO BE OBTAINED IN FIELD), NOT ON ELECTRICAL LOAD DATA ON SCHEDULE.
6. CIRCUIT BREAKERS INDICATED ON SCHEDULE ABOVE SHALL BE PROVIDED BY THE CONTRACTOR (UNLESS OTHERWISE NOTED ON THE DRAWINGS) IN THE PROPOSED OR EXISTING PANEL (THEY ARE NOT EXISTING BREAKERS, UNLESS INDICATED ON THE PANELBOARD SCHEDULE).
7. NOTE, THIS SCHEDULE DOES NOT INCLUDE THE REQUIRED ELECTRICAL CONNECTIONS FOR PROPOSED INSTRUMENTS, CONTROLLERS, VALVES, ETC... REFER TO THE SINGLE LINE DIAGRAMS AND RISER DIAGRAMS FOR REQUIRED ELECTRICAL POWER AND CONTROL CONNECTIONS FOR ALL PROPOSED INSTRUMENTS, CONTROLS, VALVES, ETC...

REMARKS:

1. STARTER INTERNAL TO OEM CONTROL PANEL.
2. EQUIPMENT LOCATED WITHIN A CLASSIFIED SPACE. REFER TO NFPA 820 TABLE FOR AREA CLASSIFICATION. ALL WIRING METHODS TO COMPLY WITH NEC ARTICLE 501. ALL ELECTRICAL EQUIPMENT, DEVICES, AND WIRING METHODS WITHIN THIS AREA TO BE EXPLOSION PROOF RATED FOR USE IN A CLASSIFIED ENVIRONMENT.
3. EQUIPMENT IS CORD+PLUG CONNECTED. COORDINATE FINAL ELECTRICAL REQUIREMENTS WITH ALL APPLICABLE TRADE CONTRACTORS.
4. PROVIDE MOTOR RATED SWITCH FOR ON/OFF CONTROL OF EQUIPMENT. SWITCH INTENDED TO CREATE A SWITCHED RECEPTACLE. INSTALL SWITCH ADJACENT TO RECEPTACLE AND EQUIPMENT.
5. CONTRACTOR TO PROVIDE RECEPTACLE AS 125-VOLT, 2-POLE, 3-WIRE, 20-AMP, HEAVY DUTY, DUPLEX, AND OF THE GFI TYPE. INSTALL RECEPTACLE AT LOCATION OF MOTOR AS INDICATED ON FLOOR PLAN VIEW. COORDINATE MOUNTING HEIGHT WITH ALL APPLICABLE TRADE CONTRACTORS.
6. PROVIDE AS VFD SHIELDED CABLE. CONDUIT SIZE IS LISTED AS MINIMUM, PROVIDE LARGER DIAMETER AS REQUIRED PER MANUFACTURER RECOMMENDATIONS. REFER TO SPECIFICATIONS FOR ADDITIONAL INFORMATION. ALL REQUIREMENTS TO BE PER NEC.
7. EQUIPMENT DISCONNECT TO BE PROVIDED WITH A SET OF AUXILIARY CONTACTS FOR CONTROL AS SHOWN/SPECIFIED ON THE ELECTRICAL SINGLE LINE DIAGRAMS AND RISER DIAGRAMS.
8. CONTRACTOR RESPONSIBLE FOR PROVIDING ALL NECESSARY INTERLOCK CIRCUITRY (CONDUIT & CONDUCTORS) FOR AN OVERALL COMPLETE AND OPERABLE SYSTEM. REFER TO HVAC DRAWINGS FOR ADDITIONAL INFORMATION AND COORDINATE FINAL REQUIREMENTS WITH ALL APPLICABLE TRADE CONTRACTORS.
9. EQUIPMENT PROVIDED WITH FACTORY MOUNTED DISCONNECT SWITCH.
10. CONTRACTOR IS RESPONSIBLE FOR PROVIDING ALL NECESSARY INTERLOCK CIRCUITRY. PROVIDE CONTROL POWER TRANSFORMER AND ENCLOSURE AS REQUIRED TO OBTAIN NECESSARY VOLTAGE FOR THERMOSTAT. REFER TO HVAC DRAWINGS AND COORDINATE WITH ALL APPLICABLE TRADE CONTRACTORS FOR THERMOSTAT LOCATIONS AND FINAL REQUIREMENTS.
11. EQUIPMENT PROVIDED WITH FACTORY MOUNTED DISCONNECT SWITCH.
12. FAN PROVIDED WITH 120V MOTORIZED DAMPER. CONTRACTOR TO PROVIDE ADDITIONAL 120V CIRCUIT PER MANUFACTURERS RECOMMENDATIONS. COORDINATE FINAL REQUIREMENTS WITH APPLICABLE TRADE CONTRACTOR, OWNER, AND ENGINEER AND PROVIDE AS REQUIRED. PROVIDE ADDITIONAL CONTROL POWER TRANSFORMER AS REQUIRED.
13. EQUIPMENT PROVIDED WITH BUILT-IN THERMOSTAT AND DISCONNECT SWITCH.
14. EQUIPMENT LOCATED IN A CORROSIVE ENVIRONMENT. ALL ELECTRICAL EQUIPMENT AND WIRING METHODS TO BE CORROSION RESISTANT. ALL MOUNTING HARDWARE, BRACKETS, ACCESSORIES, ETC... TO BE PVC COATED STAINLESS STEEL. ALL CONDUIT TO BE PVC COATED RGS. REFER TO RACEWAY SCHEDULE FOR ADDITIONAL INFORMATION/REQUIREMENTS.
15. PROVIDE CO/NO2 DETECTION SYSTEM (ARMSTRONG AMC-1BVC OR EQUAL) TO BE INSTALLED AT LOCATION SHOWN. PROVIDE INTERLOCK BETWEEN GAS DETECTION SYSTEM AND EXHAUST FAN. EF-950 SHALL BE CONTROLLED THRU CO/NO2 DETECTION SYSTEM WITH TWO POSITION SELECTOR SWITCH (ON/AUTO). ON SHALL ENABLE EXHAUST FAN. AUTO SHALL BE INTERLOCKED WITH GAS DETECTION SYSTEM.
16. PROVIDE ALL NECESSARY POWER/CONTROL CONDUCTORS, INTERLOCKS, AND CONDUIT BETWEEN ALL ASSOCIATED DEVICES. CONTRACTOR TO CIRCUIT/CONNECT PER MANUFACTURERS WRITTEN RECOMMENDATIONS FOR AN OVERALL COMPLETE AND OPERABLE ELECTRIC OVERHEAD DOOR SYSTEM. CONFIRM/COORDINATE FINAL VOLTAGE AND REQUIRED CIRCUIT BREAKER/CONDUCTOR SIZES IN THE FIELD WITH ACTUAL SUPPLIED EQUIPMENT. ALL REQUIREMENTS TO BE PER NEC. IN ADDITION CONTRACTOR TO SUBSTITUTE HARD WIRED CONNECTION FOR RECEPTACLE (CORD &PLUG) CONNECTION IF REQUIRED. FINAL REQUIREMENTS TO BE COORDINATED WITH ALL APPLICABLE TRADE CONTRACTORS AND THE OWNER. PROVIDE AS REQUIRED. REFER TO 'TYPICAL OVERHEAD DOOR RISER DIAGRAM' FOR ADDITIONAL INFORMATION.

MHE ENGINEERING
33 Airport Center Drive, Suite 202
New Windsor, NY 12553
(845) 567-3100
111 Wheatfield Drive, Suite 1
Milford, PA 18337
(570) 296-2765

BID ADDENDUM

JADE STONE ENGINEERING

STATE OF NEW YORK · JEFFREY E. ROBINSON · 095896 · LICENSED PROFESSIONAL ENGINEER

HAZARDOUS MATERIAL NOTE:
THE SERVICES PROVIDED BY MHE, INCLUDING ALL WORK DEPICTED ON MHE PLANS, DO NOT INCLUDE SERVICES RELATED TO THE IDENTIFICATION, CONTROLS OR HANDLING OF HAZARDOUS MATERIALS, INCLUDING SUCH MATERIALS AS ASBESTOS AND LEAD PAINT. ALL TESTING, IDENTIFICATION, ABATEMENT, CONTROLS, AND HANDLING OF HAZARDOUS MATERIALS SHALL BE UNDERTAKEN BY A HAZARDOUS MATERIAL CONSULTANT AND CERTIFIED PROFESSIONALS. IF SUCH MATERIALS HAVE BEEN IDENTIFIED, CONTRACTOR WILL COMMUNICATE DIRECTLY WITH HAZARDOUS MATERIAL PROFESSIONAL FOR THE PERFORMANCE OF ANY WORK ON OR ADJACENT TO SAID MATERIALS. IF UNIDENTIFIED MATERIALS OF CONCERN ARE ENCOUNTERED WHILE UNDERTAKING THE WORK SHOWN HEREON, CONTRACTOR SHALL IMMEDIATELY NOTIFY ENGINEER AND OWNER, AND SHALL OBTAIN DIRECTION FROM THE HAZARDOUS MATERIAL CONSULTANT PRIOR TO THE CONTINUATION OF WORK INVOLVING SUSPECTED MATERIAL.

UDIG·NY SAFE DIGGING STARTS HERE
CALL 811

UNAUTHORIZED ADDITION OR ALTERATION OF THIS PLAN IS A VIOLATION OF SECTION 7209(2) OF THE NEW YORK STATE EDUCATION LAW.

ALL PRODUCTION & INTELLECTUAL PROPERTY RIGHT RESERVED ©

CAESARS LANE WWTP EXPANSION PROJECT: PHASE 2
145 CAESARS LN.
NEW WINDSOR, NY 12553
FOR TOWN OF NEW WINDSOR
555 UNION AVE.
NEW WINDSOR, NY 12553

ELECTRICAL SCHEDULES

REVISIONS

NO.	DESCRIPTION	DATE

ISSUED DATE:	06 JUNE, 2025
DESIGN BY:	RRM
DRAWN BY:	CDJ
CHECKED BY:	MGR
REVIEWED BY:	JER

SHEET NO.

E-048

PROJECT # 18-732 PHASE #

I/O TABLE (1 OF 11)

EQUIPMENT	FUNCTION	HOMERUN	I/O TYPE	INDICATE	SURGE PROTECTION	UNITS/RANGE
20-P-501-A	RUNNING	MBR-CP	DO			
RAS PUMP STARTER	FAULT		DI			
	CALL TO RUN		DO			
	MOTOR HIGH TEMPERATURE		DI			
20-P-501-B	RUNNING	MBR-CP	DO			
RAS PUMP STARTER	FAULT		DI			
	CALL TO RUN		DO			
	MOTOR HIGH TEMPERATURE		DI			
20-P-501-C	RUNNING	MBR-CP	DO			
RAS PUMP STARTER	FAULT		DI			
	CALL TO RUN		DO			
	MOTOR HIGH TEMPERATURE		DI			
20-P-501-D	RUNNING	MBR-CP	DO			
RAS PUMP STARTER	FAULT		DI			
	CALL TO RUN		DO			
	MOTOR HIGH TEMPERATURE		DI			
16-B-401-A	VFD READY STATUS	MBR-CP	DO			0 - 60 HZ
PROCESS BLOWER	VFD CALL TO RUN		DI			
	VFD SPEED CONTROL		AI			
	VFD SPEED REFERENCE		AO			
	VFD FAULT		DO			
	AUTO MODE		DO			
	MOTOR HIGH TEMPERATURE		DI			
	MOTOR DISCONNECT POSITION		DO			
16-B-401-B	VFD READY STATUS	MBR-CP	DO			0 - 60 HZ
PROCESS BLOWER	VFD CALL TO RUN		DI			
	VFD SPEED CONTROL		AI			
	VFD SPEED REFERENCE		AO			
	VFD FAULT		DO			
	AUTO MODE		DO			
	MOTOR HIGH TEMPERATURE		DI			
	MOTOR DISCONNECT POSITION		DO			
16-B-401-B	VFD READY STATUS	MBR-CP	DO			0 - 60 HZ
PROCESS BLOWER	VFD CALL TO RUN		DI			
	VFD SPEED CONTROL		AI			
	VFD SPEED REFERENCE		AO			
	VFD FAULT		DO			
	AUTO MODE		DO			
	MOTOR HIGH TEMPERATURE		DI			
	MOTOR DISCONNECT POSITION		DO			
16-B-401-C	VFD READY STATUS	MBR-CP	DO			0 - 60 HZ
PROCESS BLOWER	VFD CALL TO RUN		DI			
	VFD SPEED CONTROL		AI			
	VFD SPEED REFERENCE		AO			
	VFD FAULT		DO			
	AUTO MODE		DO			
	MOTOR HIGH TEMPERATURE		DI			
	MOTOR DISCONNECT POSITION		DO			
20-B-201-A	VFD READY STATUS	MBR-CP	DO			0 - 60 HZ
MEMBRANE BLOWER	VFD CALL TO RUN		DI			
	VFD SPEED CONTROL		AI			
	VFD SPEED REFERENCE		AO			
	VFD FAULT		DO			
	AUTO MODE		DO			
	MOTOR HIGH TEMPERATURE		DI			
	MOTOR DISCONNECT POSITION		DO			
20-B-201-B	VFD READY STATUS	MBR-CP	DO			0 - 60 HZ
MEMBRANE BLOWER	VFD CALL TO RUN		DI			
	VFD SPEED CONTROL		AI			
	VFD SPEED REFERENCE		AO			
	VFD FAULT		DO			
	AUTO MODE		DO			
	MOTOR HIGH TEMPERATURE		DI			
	MOTOR DISCONNECT POSITION		DO			
20-B-201-C	VFD READY STATUS	MBR-CP	DO			0 - 60 HZ
MEMBRANE BLOWER	VFD CALL TO RUN		DI			
	VFD SPEED CONTROL		AI			
	VFD SPEED REFERENCE		AO			
	VFD FAULT		DO			
	AUTO MODE		DO			
	MOTOR HIGH TEMPERATURE		DI			
	MOTOR DISCONNECT POSITION		DO			
20-B-201-D	VFD READY STATUS	MBR-CP	DO			0 - 60 HZ
MEMBRANE BLOWER	VFD CALL TO RUN		DI			
	VFD SPEED CONTROL		AI			
	VFD SPEED REFERENCE		AO			
	VFD FAULT		DO			
	AUTO MODE		DO			
	MOTOR HIGH TEMPERATURE		DI			
	MOTOR DISCONNECT POSITION		DO			
20-B-201-E	VFD READY STATUS	MBR-CP	DO			0 - 60 HZ
MEMBRANE BLOWER	VFD CALL TO RUN		DI			
	VFD SPEED CONTROL		AI			
	VFD SPEED REFERENCE		AO			
	VFD FAULT		DO			
	AUTO MODE		DO			
	MOTOR HIGH TEMPERATURE		DI			
	MOTOR DISCONNECT POSITION		DO			
16-MX-211-1	RUNNING	MBR-CP	DO			
ANOXIC PUMP	FAULT		DI			
	CALL TO RUN		DO			
	MOTOR HIGH TEMPERATURE		DI			
16-MX-211-2	RUNNING	MBR-CP	DO			
ANOXIC PUMP	FAULT		DI			
	CALL TO RUN		DO			
	MOTOR HIGH TEMPERATURE		DI			
16-MX-211-3	RUNNING	MBR-CP	DO			
ANOXIC PUMP	FAULT		DI			
	CALL TO RUN		DO			
	MOTOR HIGH TEMPERATURE		DI			
15-LE-301	NAOH LEVEL ELEMENT	15-LIT-301	DO			
15-LIT-301	NAOH LEVEL TRANSMITTER	MBR-CP	DO			
23-LE-101	NACLO LEVEL ELEMENT	23-LIT-101	DO			
23-LIT-101	NACLO LEVEL TRANSMITTER	MBR-CP	DO			
23-LE-301	CITRIC ACID LEVEL ELEMENT	23-LIT-301	DO			
23-LIT-301	CITRIC ACID TRANSMITTER	MBR-CP	DO			
15-P-301-A	SPEED CONTROL ANALOG INPUT	MBR-CP	AI			
NAOH METERING PUMP	SPEED REFERENCE ANALOG INPUT		AI			
	RUN/STOP INPUT		AO			
	GENERAL ALARMS/STATUS INPUTS		DI			

I/O TABLE (2 OF 11)

EQUIPMENT	FUNCTION	HOMERUN	I/O TYPE	INDICATE	SURGE PROTECTION	UNITS/RANGE
15-P-301-B	SPEED CONTROL ANALOG INPUT	MBR-CP	AI			
NAOH METERING PUMP	SPEED REFERENCE ANALOG INPUT		AI			
	RUN/STOP INPUT		AO			
	GENERAL ALARMS/STATUS INPUTS		DI			
23-P-101-A	SPEED CONTROL ANALOG INPUT	MBR-CP	AI			
NACLO METERING PUMP	SPEED REFERENCE ANALOG INPUT		AI			
	RUN/STOP INPUT		AO			
	GENERAL ALARMS/STATUS INPUTS		DI			
23-P-101-B	SPEED CONTROL ANALOG INPUT	MBR-CP	AI			
NACLO METERING PUMP	SPEED REFERENCE ANALOG INPUT		AI			
	RUN/STOP INPUT		AO			
	GENERAL ALARMS/STATUS INPUTS		DI			
23-P-301-A	SPEED CONTROL ANALOG INPUT	MBR-CP	AI			
CITRIC ACID METERING PUMP	SPEED REFERENCE ANALOG INPUT		AI			
	RUN/STOP INPUT		AO			
	GENERAL ALARMS/STATUS INPUTS		DI			
23-P-301-B	SPEED CONTROL ANALOG INPUT	MBR-CP	AI			
CITRIC ACID METERING PUMP	SPEED REFERENCE ANALOG INPUT		AI			
	RUN/STOP INPUT		AO			
	GENERAL ALARMS/STATUS INPUTS		DI			
90-FV-001-A	AUTO DRAIN SOLENOID	MBR-CP	DI			
90-FV-001-B	AUTO DRAIN SOLENOID	MBR-CP	DI			
90-FV-001-C	AUTO DRAIN SOLENOID	MBR-CP	DI			
90-PSV-001-A	COMPRESSOR PRESSURE SWITCH	MBR-CP	DI			
90-PSV-001-B	COMPRESSOR PRESSURE SWITCH	MBR-CP	DI			
90-FV-011	DRAIN VALVE SOLENOID	MBR-CP	DI			
90-PSL-001-A	LOW AIR PRESSURE SWITCH	MBR-CP	DI			
90-PSL-001-B	LOW AIR PRESSURE SWITCH	MBR-CP	DI			
90-AC-001-A	RUNNING	MBR-CP	DO			
AIR COMPRESSOR	FAULT		DI			
	CALL TO RUN		DO			
	MOTOR HIGH TEMPERATURE		DI			
90-AC-001-B	RUNNING	MBR-CP	DO			
AIR COMPRESSOR	FAULT		DI			
	CALL TO RUN		DO			
	MOTOR HIGH TEMPERATURE		DI			
90-DR-001-A	RUNNING	MBR-CP	DO			
REFRIGERATED DRIER	FAULT		DI			
	CALL TO RUN		DO			
	MOTOR HIGH TEMPERATURE		DI			
90-DR-001-B	RUNNING	MBR-CP	DO			
REFRIGERATED DRIER	FAULT		DI			
	CALL TO RUN		DO			
	MOTOR HIGH TEMPERATURE		DI			
16-AE-402-1	PH PROBE	16-AIT-405A-1	DI			
16-AE-405A-1	DO PROBE	16-AIT-405A-1	DI			
16-AIT-405A-1	CONTROLLER	MBR-CP	DO			
16-AE-402-2	PH PROBE	16-AIT-405A-2	DI			
16-AE-405A-2	DO PROBE	16-AIT-405A-2	DI			
16-AIT-405A-2	CONTROLLER	MBR-CP	DO			
16-AE-402-3	PH PROBE	16-AIT-405A-3	DI			
16-AE-405A-3	DO PROBE	16-AIT-405A-3	DI			
16-AIT-405A-3	CONTROLLER	MBR-CP	DO			
16-LSHH-401-1	FLOAT SWITCH	MBR-CP	DI			
16-LSHH-401-2	FLOAT SWITCH	MBR-CP	DI			
16-LSHH-401-3	FLOAT SWITCH	MBR-CP	DI			
16-FSL-401-A	PROCESS FLOW FLOAT SWITCH	MBR-CP	DI			
16-FSL-401-B	PROCESS FLOW FLOAT SWITCH	MBR-CP	DI			
16-FSL-401-C	PROCESS FLOW FLOAT SWITCH	MBR-CP	DI			
20-FSL-201-A	MEMBRANE FLOW FLOAT SWITCH	MBR-CP	DI			
20-FSL-201-B	MEMBRANE FLOW FLOAT SWITCH	MBR-CP	DI			
20-FSL-201-C	MEMBRANE FLOW FLOAT SWITCH	MBR-CP	DI			
20-FSL-201-D	MEMBRANE FLOW FLOAT SWITCH	MBR-CP	DI			
20-FSL-201-E	MEMBRANE FLOW FLOAT SWITCH	MBR-CP	DI			
20-FCV-301-1	V-PORT CONTROL VALVE	MBR-CP	AO			
20-FCV-301-2	V-PORT CONTROL VALVE	MBR-CP	AO			
20-FCV-301-3	V-PORT CONTROL VALVE	MBR-CP	AO			
20-FCV-301-4	V-PORT CONTROL VALVE	MBR-CP	AO			
20-FV-621-1	ACTUATED BUTTERFLY VALVE	MBR-CP	DI			
20-FV-621-2	ACTUATED BUTTERFLY VALVE	MBR-CP	DI			
20-FV-621-3	ACTUATED BUTTERFLY VALVE	MBR-CP	DI			
20-FV-621-4	ACTUATED BUTTERFLY VALVE	MBR-CP	DI			
20-FV-622-1	ACTUATED BUTTERFLY VALVE	MBR-CP	DI			
20-FV-622-2	ACTUATED BUTTERFLY VALVE	MBR-CP	DI			
20-FV-622-3	ACTUATED BUTTERFLY VALVE	MBR-CP	DI			
20-FV-622-4	ACTUATED BUTTERFLY VALVE	MBR-CP	DI			
20-FM-301-1	PERMEATE FLOW METER	20-FIT-301-1	AI			
20-FIT-301-1	PERMEATE FLOW TRANSMITTER	MBR-CP	ETHERNET			
20-FM-301-2	PERMEATE FLOW METER	20-FIT-301-2	AI			
20-FIT-301-2	PERMEATE FLOW TRANSMITTER	MBR-CP	ETHERNET			
20-FM-301-3	PERMEATE FLOW METER	20-FIT-301-3	AI			
20-FIT-301-3	PERMEATE FLOW TRANSMITTER	MBR-CP	ETHERNET			
20-FM-301-4	PERMEATE FLOW METER	20-FIT-301-4	AI			
20-FIT-301-4	PERMEATE FLOW TRANSMITTER	MBR-CP	ETHERNET			

I/O TABLE (3 OF 11)

EQUIPMENT	FUNCTION	HOMERUN	I/O TYPE	INDICATE	SURGE PROTECTION	UNITS/RANGE
20-FV-803-1	PERMEATE EJECTOR VALVES	MBR-CP	DI			
20-FV-803-2	PERMEATE EJECTOR VALVES	MBR-CP	DI			
20-FV-803-3	PERMEATE EJECTOR VALVES	MBR-CP	DI			
20-FV-803-4	PERMEATE EJECTOR VALVES	MBR-CP	DI			
23-FV-130	SODIUM HYPO CONTROL VALVE	MBR-CP	DI			
23-FV-330	CITRIC ACID CONTROL VALVE	MBR-CP	DI			
20-FV-803-6	MAIN PERMEATE EJECTOR VALVE	MBR-CP	DI			
20-FV-801-5	AIR EJECTOR VALVE	MBR-CP	DI			
20-FV-802-5	AIR EJECTOR ASSEMBLY	MBR-CP	DI			
20-FV-801-6	COMMON PERMEATE EJECTOR	MBR-CP	DI			
20-FV-802-6	COMMON PERMEATE EJECTOR	MBR-CP	DI			
20-P-321-1	RUNNING	MBR-CP	DO			
TURBIDITY SAMPLING PUMP	FAULT		DI			
	CALL TO RUN		DO			
	MOTOR HIGH TEMPERATURE		DI			
20-P-321-2	RUNNING	MBR-CP	DO			
TURBIDITY SAMPLING PUMP	FAULT		DI			
	CALL TO RUN		DO			
	MOTOR HIGH TEMPERATURE		DI			
20-P-321-3	RUNNING	MBR-CP	DO			
TURBIDITY SAMPLING PUMP	FAULT		DI			
	CALL TO RUN		DO			
	MOTOR HIGH TEMPERATURE		DI			
20-P-321-4	RUNNING	MBR-CP	DO			
TURBIDITY SAMPLING PUMP	FAULT		DI			
	CALL TO RUN		DO			
	MOTOR HIGH TEMPERATURE		DI			
20-AE-320-1	TURBIDITY METER	20-AIT-320-1	DI			
20-AIT-320-1	TURBIDITY CONTROLLER	MBR-CP	DO			
20-AE-320-2	TURBIDITY METER	20-AIT-320-2	DI			
20-AIT-320-2	TURBIDITY CONTROLLER	MBR-CP	DO			
20-AE-320-3	TURBIDITY METER	20-AIT-320-3	DI			
20-AIT-320-3	TURBIDITY CONTROLLER	MBR-CP	DO			
20-AE-320-4	TURBIDITY METER	20-AIT-320-4	DI			
20-AIT-320-4	TURBIDITY CONTROLLER	MBR-CP	DO			
20-RFM-507-1	RAS FLOW METER	20-FIT-570-1	DI			
20-FIT-570-1	RAS FLOW TRANSMITTERS	MBR-CP	DO			
20-RFM-507-2	RAS FLOW METER	20-FIT-570-2	DI			
20-FIT-570-2	RAS FLOW TRANSMITTERS	MBR-CP	DO			
20-RFM-507-3	RAS FLOW METER	20-FIT-570-3	DI			
20-FIT-570-3	RAS FLOW TRANSMITTERS	MBR-CP	DO			
20-RFM-507-4	RAS FLOW METER	20-FIT-570-4	DI			
20-FIT-570-4	RAS FLOW TRANSMITTERS	MBR-CP	DO			
16-WFM-707	WAS FLOW METER	16-FIT-707	DI			
16-FIT-707	WAS FLOW TRANSMITTER	MBR-CP	DO			
16-FV-700	SLUDGE AUTOMATIC VALVE	MBR-CP	DI			
20-LE-200	LEVEL ELEMENT	20-LIT-200	DI			
20-LIT-200	LEVEL TRANSMITTER	MBR-CP	DO			
20-LE-203-1	LEVEL ELEMENT	20-LIT-203-1	DI			
20-LIT-203-1	LEVEL TRANSMITTER	MBR-CP	DO			
20-LE-203-2	LEVEL ELEMENT	20-LIT-203-2	DI			
20-LIT-203-2	LEVEL TRANSMITTER	MBR-CP	DO			
20-LE-203-3	LEVEL ELEMENT	20-LIT-203-3	DI			
20-LIT-203-3	LEVEL TRANSMITTER	MBR-CP	DO			
20-LE-203-4	LEVEL ELEMENT	20-LIT-203-4	DI			
20-LIT-203-4	LEVEL TRANSMITTER	MBR-CP	DO			
20-PE-301-1	PRESSURE ELEMENT	20-PIT-301-1	DI			
20-PIT-301-1	PRESSURE TRANSMITTER	MBR-CP	DO			
20-PE-301-2	PRESSURE ELEMENT	20-PIT-301-2	DI			
20-PIT-301-2	PRESSURE TRANSMITTER	MBR-CP	DO			
20-PE-301-3	PRESSURE ELEMENT	20-PIT-301-3	DI			
20-PIT-301-3	PRESSURE TRANSMITTER	MBR-CP	DO			
20-PE-301-4	PRESSURE ELEMENT	20-PIT-301-4	DI			
20-PIT-301-4	PRESSURE TRANSMITTER	MBR-CP	DO			
20-LSHH-201-1	FLOAT SWITCHES	MBR-CP	DI			
20-LSHH-201-2	FLOAT SWITCHES	MBR-CP	DI			
20-LSHH-201-3	FLOAT SWITCHES	MBR-CP	DI			
20-LSHH-201-4	FLOAT SWITCHES	MBR-CP	DI			
20-LSLL-201-1	FLOAT SWITCHES	MBR-CP	DI			
20-LSLL-201-2	FLOAT SWITCHES	MBR-CP	DI			
20-LSLL-201-3	FLOAT SWITCHES	MBR-CP	DI			
20-LSLL-201-4	FLOAT SWITCHES	MBR-CP	DI			
MCR-01	VFD READY STATUS	MS-CP-1	DO			0 - 60 HZ
SCREEN DRIVE MOTOR	VFD CALL TO RUN		DI			
	VFD SPEED CONTROL		AI			
	VFD SPEED REFERENCE		AO			
	VFD FAULT		DO			
	AUTO MODE		DO			
	MOTOR HIGH TEMPERATURE		DI			
	MOTOR DISCONNECT POSITION		DO			
LCS-M-601	HAND	SRSPS-700	DO			
LOCAL CONTROL STATION	OFF		DI			
	AUTO		DO			
	FORWARD		AO			
	OFF		AO			
	REVERSE		AO			
	CYCLE		AO			
	RESET		AO			
	EMERGENCY STOP		DI			
CMP-01	VFD READY STATUS	MS-CP-1	DO			0 - 60 HZ
WASHING COMPACTOR	VFD CALL TO RUN		DI			
	VFD SPEED CONTROL		AI			
	VFD SPEED REFERENCE		AO			
	VFD FAULT		DO			
	AUTO MODE		DO			
	MOTOR HIGH TEMPERATURE		DI			
	MOTOR DISCONNECT POSITION		DO			
LS-1	DOWNSTREAM ULTRASONIC LEVEL SENSOR	LT-1	DI			
LT-1	ULTRASONIC LEVEL TRANSMITTER	MS-CP-1	DO			
LS-2	UPSTREAM ULTRASONIC LEVEL SENSOR	LT-2	DI			
LT-2	ULTRASONIC LEVEL TRANSMITTER	MS-CP-1	DO			
FL-1	HIGH LEVEL FLOAT SWITCH	MS-CP-1	DI			
SV-1	SCREEN WASHWATER SOLENOID VALVE	MS-CP-1	DI			
SV-2	COMPACTOR SOLENOID VALVE	MS-CP-1	DI			
SV-3	WASH MODULE SOLENOID VALVE	MS-CP-1	DI			

MHE ENGINEERING
33 Airport Center Drive, Suite 202
New Windsor, NY 12553
(845) 567-3100
111 Wheatfield Drive, Suite 1
Milford, PA 18337
(570) 296-2765

BID ADDENDUM

JADE STONE ENGINEERING

STATE OF NEW YORK · JEFFREY E. ROBINSON · 095896 · LICENSED PROFESSIONAL ENGINEER

HAZARDOUS MATERIAL NOTE:
THE SERVICES PROVIDED BY MHE, INCLUDING ALL WORK DEPICTED ON MHE PLANS, DO NOT INCLUDE SERVICES RELATED TO THE IDENTIFICATION, CONTROLS OR HANDLING OF HAZARDOUS MATERIALS, INCLUDING SUCH MATERIALS AS ASBESTOS AND LEAD PAINT. ALL TESTING, IDENTIFICATION, ABATEMENT, CONTROLS, AND HANDLING OF HAZARDOUS MATERIALS SHALL BE UNDERTAKEN BY A HAZARDOUS MATERIAL CONSULTANT AND CERTIFIED PROFESSIONALS. IF SUCH MATERIALS HAVE BEEN IDENTIFIED, CONTRACTOR WILL COMMUNICATE DIRECTLY WITH HAZARDOUS MATERIAL PROFESSIONAL FOR THE PERFORMANCE OF ANY WORK ON OR ADJACENT TO SAID MATERIALS. IF UNIDENTIFIED MATERIALS OF CONCERN ARE ENCOUNTERED WHILE UNDERTAKING THE WORK SHOWN HEREON, CONTRACTOR SHALL IMMEDIATELY NOTIFY ENGINEER AND OWNER, AND SHALL OBTAIN DIRECTION FROM THE HAZARDOUS MATERIAL CONSULTANT PRIOR TO THE CONTINUATION OF WORK INVOLVING SUSPECTED MATERIAL.

UDIG·NY SAFE DIGGING STARTS HERE
CALL 811

UNAUTHORIZED ADDITION OR ALTERATION OF THIS PLAN IS A VIOLATION OF SECTION 7209(2) OF THE NEW YORK STATE EDUCATION LAW.

ALL PRODUCTION & INTELLECTUAL PROPERTY RIGHT RESERVED ©

CAESARS LANE WWTP EXPANSION PROJECT: PHASE 2
145 CAESARS LN.
NEW WINDSOR, NY 12553
FOR TOWN OF NEW WINDSOR
555 UNION AVE.
NEW WINDSOR, NY 12553

ELECTRICAL SCHEDULES

REVISIONS

NO.	DESCRIPTION	DATE

ISSUED DATE:	06 JUNE, 2025
DESIGN BY:	RRM
DRAWN BY:	CDJ
CHECKED BY:	MGR
REVIEWED BY:	JER

SHEET NO.
E-049

PROJECT # 18-732 PHASE #

I/O TABLE (4 OF 11)

EQUIPMENT	FUNCTION	HOMERUN	I/O TYPE	INDICATE	SURGE PROTECTION	UNITS/RANGE
PW-01	VFD READY STATUS	PWCP-400	DO			0 - 60 HZ
PLANT WATER PUMP #1	VFD CALL TO RUN		DI			
	VFD SPEED CONTROL		AI			
	VFD SPEED REFERENCE		AO			
	VFD FAULT		DO			
	AUTO MODE		DO			
	MOTOR HIGH TEMPERATURE		DI			
	MOTOR DISCONNECT POSITION		DO			
PW-02	VFD READY STATUS	PWCP-400	DO			0 - 60 HZ
PLANT WATER PUMP #2	VFD CALL TO RUN		DI			
	VFD SPEED CONTROL		AI			
	VFD SPEED REFERENCE		AO			
	VFD FAULT		DO			
	AUTO MODE		DO			
	MOTOR HIGH TEMPERATURE		DI			
	MOTOR DISCONNECT POSITION		DO			
	FLOW SENSOR	PWCP-400	DI			
	PRESSURE TRANSMITTER	PWCP-400	DI			
	ALARM LIGHT	PWCP-400	DI			
	SUBMERSIBLE LEVEL TRANSDUCER	PWCP-400	DI			
	TEMPERATURE SENSOR	PWCP-400	DI			
	HEATER	PWCP-400	DI			
	SOLENOID VALVE #1	PWCP-400	DI			
	SOLENOID VALVE #2	PWCP-400	DI			
	FLOAT SWITCH #1	PWCP-400	DI			
	FLOAT SWITCH #2	PWCP-400	DI			
	FLOAT SWITCH #3	PWCP-400	DI			
PCD-01	RUNNING	PC-CP-1	DO			
PRIMARY DRIVE	FAULT		DI			
	CALL TO RUN		DO			
	MOTOR HIGH TEMPERATURE		DI			
SP-300	SPEAR PIN TRIP BAR	PC-CP-1	DI			
HT-300	HIGH TORQUE ALARM	PC-CP-1	DI			
FS-300	FAIL SAFE TORQUE CUTOUT CONTACT	PC-CP-1	DI			
MO-300	MOTOR OVERLOAD	PC-CP-1	DI			
PCD-02	RUNNING	PC-CP-2	DO			
PRIMARY DRIVE	FAULT		DI			
	CALL TO RUN		DO			
	MOTOR HIGH TEMPERATURE		DI			
SP-301	SPEAR PIN TRIP BAR	PC-CP-2	DI			
HT-301	HIGH TORQUE ALARM	PC-CP-2	DI			
FS-301	FAIL SAFE TORQUE CUTOUT CONTACT	PC-CP-2	DI			
MO-301	MOTOR OVERLOAD	PC-CP-2	DI			
PCD-03	RUNNING	PC-CP-3	DO			
PRIMARY DRIVE	FAULT		DI			
	CALL TO RUN		DO			
	MOTOR HIGH TEMPERATURE		DI			
SP-302	SPEAR PIN TRIP BAR	PC-CP-3	DI			
HT-302	HIGH TORQUE ALARM	PC-CP-3	DI			
FS-302	FAIL SAFE TORQUE CUTOUT CONTACT	PC-CP-3	DI			
MO-302	MOTOR OVERLOAD	PC-CP-3	DI			
PCD-04	RUNNING	PC-CP-4	DO			
PRIMARY DRIVE	FAULT		DI			
	CALL TO RUN		DO			
	MOTOR HIGH TEMPERATURE		DI			
SP-303	SPEAR PIN TRIP BAR	PC-CP-4	DI			
HT-303	HIGH TORQUE ALARM	PC-CP-4	DI			
FS-303	FAIL SAFE TORQUE CUTOUT CONTACT	PC-CP-4	DI			
MO-303	MOTOR OVERLOAD	PC-CP-4	DI			
F-1	RUNNING	CFCP-1	DO			
COOLING FAN #1	FAULT		DI			
	CALL TO RUN		DO			
	MOTOR HIGH TEMPERATURE		DI			
F-2	RUNNING	CFCP-1	DO			
COOLING FAN #2	FAULT		DI			
	CALL TO RUN		DO			
	MOTOR HIGH TEMPERATURE		DI			
F-3	RUNNING	CFCP-1	DO			
COOLING FAN #3	FAULT		DI			
	CALL TO RUN		DO			
	MOTOR HIGH TEMPERATURE		DI			
F-4	RUNNING	CFCP-1	DO			
COOLING FAN #4	FAULT		DI			
	CALL TO RUN		DO			
	MOTOR HIGH TEMPERATURE		DI			
F-5	RUNNING	CFCP-1	DO			
COOLING FAN #5	FAULT		DI			
	CALL TO RUN		DO			
	MOTOR HIGH TEMPERATURE		DI			
F-6	RUNNING	CFCP-1	DO			
COOLING FAN #6	FAULT		DI			
	CALL TO RUN		DO			
	MOTOR HIGH TEMPERATURE		DI			
F-7	RUNNING	CFCP-1	DO			
COOLING FAN #7	FAULT		DI			
	CALL TO RUN		DO			
	MOTOR HIGH TEMPERATURE		DI			
F-8	RUNNING	CFCP-1	DO			
COOLING FAN #8	FAULT		DI			
	CALL TO RUN		DO			
	MOTOR HIGH TEMPERATURE		DI			
H/S-400	SYSTEM HORN/STROBES	HVAC-400	DI			
H/S-401	SYSTEM HORN/STROBES	HVAC-400	DI			
PS-400	PRESSURE SWITCH	HVAC-400	DI			
PS-401	PRESSURE SWITCH	HVAC-400	DI			
H/S-500	SYSTEM HORN/STROBES	HVAC-500	DI			
H/S-501	SYSTEM HORN/STROBES	HVAC-500	DI			
PS-500	PRESSURE SWITCH	HVAC-500	DI			
PS-501	PRESSURE SWITCH	HVAC-500	DI			
H/S-700	SYSTEM HORN/STROBES	HVAC-700	DI			
H/S-701	SYSTEM HORN/STROBES	HVAC-700	DI			
H/S-702	SYSTEM HORN/STROBES	HVAC-700	DI			
H/S-703	SYSTEM HORN/STROBES	HVAC-700	DI			
H/S-704	SYSTEM HORN/STROBES	HVAC-700	DI			
H/S-705	SYSTEM HORN/STROBES	HVAC-700	DI			
H/S-706	SYSTEM HORN/STROBES	HVAC-700	DI			
H/S-707	SYSTEM HORN/STROBES	HVAC-700	DI			
H/S-708	SYSTEM HORN/STROBES	HVAC-700	DI			
H/S-709	SYSTEM HORN/STROBES	HVAC-700	DI			
H/S-710	SYSTEM HORN/STROBES	HVAC-700	DI			

I/O TABLE (5 OF 11)

EQUIPMENT	FUNCTION	HOMERUN	I/O TYPE	INDICATE	SURGE PROTECTION	UNITS/RANGE
H/S-711	SYSTEM HORN/STROBES	HVAC-700	DI			
H/S-712	SYSTEM HORN/STROBES	HVAC-700	DI			
H/S-713	SYSTEM HORN/STROBES	HVAC-700	DI			
H/S-714	SYSTEM HORN/STROBES	HVAC-700	DI			
PS-700	PRESSURE SWITCH	HVAC-500	DI			
PS-701	PRESSURE SWITCH	HVAC-500	DI			
H/S-200	GAS DETECTION HORN/STROBE	GDSCP-200	DI			
H/S-201	GAS DETECTION HORN/STROBE	GDSCP-200	DI			
H/S-202	GAS DETECTION HORN/STROBE	GDSCP-200	DI			
H/S-203	GAS DETECTION HORN/STROBE	GDSCP-200	DI			
H/S-204	GAS DETECTION HORN/STROBE	GDSCP-200	DI			
H/S-205	GAS DETECTION HORN/STROBE	GDSCP-200	DI			
LEL-200	COMBUSTIBLE GAS SENSOR	LEL-201	DI			
LEL-201	COMBUSTIBLE GAS TRANSMITTER	GDSCP-200	DO			
LEL-202	COMBUSTIBLE GAS SENSOR	LEL-203	DI			
LEL-203	COMBUSTIBLE GAS TRANSMITTER	GDSCP-200	DO			
H2S-200	HYDROGEN SULFIDE SENSOR	H2S-201	DI			
H2S-201	HYDROGEN SULFIDE TRANSMITTER	GDSCP-200	DO			
H2S-202	HYDROGEN SULFIDE SENSOR	H2S-203	DI			
H2S-203	HYDROGEN SULFIDE TRANSMITTER	GDSCP-200	DO			
O2-200	OXYGEN DEPLETION SENSOR	O2-201	DI			
O2-201	OXYGEN DEPLETION TRANSMITTER	GDSCP-200	DO			
O2-202	OXYGEN DEPLETION SENSOR	O2-201	DI			
O2-203	OXYGEN DEPLETION TRANSMITTER	GDSCP-200	DO			
BPGD-01	RUNNING	BP-CP-1	DO			
GRAVITY DRIVE (E.T.R.)	FAULT		DI			
	CALL TO RUN		DO			
	MOTOR HIGH TEMPERATURE		DI			
BPD-01	RUNNING	BP-CP-1	DO			
PRESS DRIVE (E.T.R.)	FAULT		DI			
	CALL TO RUN		DO			
	MOTOR HIGH TEMPERATURE		DI			
BPD-02	RUNNING	BP-CP-1	DO			
PRESS DRIVE (E.T.R.)	FAULT		DI			
	CALL TO RUN		DO			
	MOTOR HIGH TEMPERATURE		DI			
BPSFP-01	VFD READY STATUS	BP-CP-1	DO			0 - 60 HZ
SLUDGE FEED PUMP #1 (E.T.R.)	VFD CALL TO RUN		DI			
	VFD SPEED CONTROL		AI			
	VFD SPEED REFERENCE		AO			
	VFD FAULT		DO			
	AUTO MODE		DO			
	MOTOR HIGH TEMPERATURE		DI			
	MOTOR DISCONNECT POSITION		DO			
BPSFP-02	VFD READY STATUS	BP-CP-1	DO			0 - 60 HZ
SLUDGE FEED PUMP #2 (E.T.R.)	VFD CALL TO RUN		DI			
	VFD SPEED CONTROL		AI			
	VFD SPEED REFERENCE		AO			
	VFD FAULT		DO			
	AUTO MODE		DO			
	MOTOR HIGH TEMPERATURE		DI			
	MOTOR DISCONNECT POSITION		DO			
BWS-01	VFD READY STATUS	BP-CP-1	DO			0 - 60 HZ
BELT WASH SYSTEM (E.T.R.)	VFD CALL TO RUN		DI			
	VFD SPEED CONTROL		AI			
	VFD SPEED REFERENCE		AO			
	VFD FAULT		DO			
	AUTO MODE		DO			
	MOTOR HIGH TEMPERATURE		DI			
	MOTOR DISCONNECT POSITION		DO			
SDC-01	VFD READY STATUS	BP-CP-1	DO			0 - 60 HZ
SLUDGE DISCHARGE CONVEYOR	VFD CALL TO RUN		DI			
	VFD SPEED CONTROL		AI			
	VFD SPEED REFERENCE		AO			
	VFD FAULT		DO			
	AUTO MODE		DO			
	MOTOR HIGH TEMPERATURE		DI			
	MOTOR DISCONNECT POSITION		DO			
PFS-01	VFD READY STATUS	PFS-CP-01	DO			0 - 60 HZ
POLYMER FEED SYSTEM (E.T.R.)	VFD CALL TO RUN		DI			
	VFD SPEED CONTROL		AI			
	VFD SPEED REFERENCE		AO			
	VFD FAULT		DO			
	AUTO MODE		DO			
	MOTOR HIGH TEMPERATURE		DI			
	MOTOR DISCONNECT POSITION		DO			
PFS-CP-01 (E.T.R.)	COMMUNICATION LINK	BP-CP-01	DO			
FE-1 (E.T.R.)	MAGNETIC FLOW METER	FIT-1	DI			
FIT-1 (E.T.R.)	MAGNETIC FLOW TRANSMITTER	BP-CP-01	DO			
PS-01	PRESSURE SWITCH	BP-CP-01	DO			
SDC-02	VFD READY STATUS	BP-CP-2	DO			0 - 60 HZ
SLUDGE DISCHARGE CONVEYOR	VFD CALL TO RUN		DI			
	VFD SPEED CONTROL		AI			
	VFD SPEED REFERENCE		AO			
	VFD FAULT		DO			
	AUTO MODE		DO			
	MOTOR HIGH TEMPERATURE		DI			
	MOTOR DISCONNECT POSITION		DO			
SDC-02	VFD READY STATUS	BP-CP-2	DO			0 - 60 HZ
SLUDGE DISCHARGE CONVEYOR	VFD CALL TO RUN		DI			
	VFD SPEED CONTROL		AI			
	VFD SPEED REFERENCE		AO			
	VFD FAULT		DO			
	AUTO MODE		DO			
	MOTOR HIGH TEMPERATURE		DI			
	MOTOR DISCONNECT POSITION		DO			
BPGD-02	VFD READY STATUS	BP-CP-2	DO			0 - 60 HZ
BELT PRESS #2 GRAVITY DRIVE	VFD CALL TO RUN		DI			
	VFD SPEED CONTROL		AI			
	VFD SPEED REFERENCE		AO			
	VFD FAULT		DO			
	AUTO MODE		DO			
	MOTOR HIGH TEMPERATURE		DI			
	MOTOR DISCONNECT POSITION		DO			

I/O TABLE (6 OF 11)

EQUIPMENT	FUNCTION	HOMERUN	I/O TYPE	INDICATE	SURGE PROTECTION	UNITS/RANGE
BPD-03	VFD READY STATUS	BP-CP-2	DO			0 - 60 HZ
BELT PRESS #2 DRIVE	VFD CALL TO RUN		DI			
	VFD SPEED CONTROL		AI			
	VFD SPEED REFERENCE		AO			
	VFD FAULT		DO			
	AUTO MODE		DO			
	MOTOR HIGH TEMPERATURE		DI			
	MOTOR DISCONNECT POSITION		DO			
BPD-03	VFD READY STATUS	BP-CP-2	DO			0 - 60 HZ
BELT PRESS #2 DRIVE	VFD CALL TO RUN		DI			
	VFD SPEED CONTROL		AI			
	VFD SPEED REFERENCE		AO			
	VFD FAULT		DO			
	AUTO MODE		DO			
	MOTOR HIGH TEMPERATURE		DI			
	MOTOR DISCONNECT POSITION		DO			
BPD-04	VFD READY STATUS	BP-CP-2	DO			0 - 60 HZ
BELT PRESS #2 DRIVE	VFD CALL TO RUN		DI			
	VFD SPEED CONTROL		AI			
	VFD SPEED REFERENCE		AO			
	VFD FAULT		DO			
	AUTO MODE		DO			
	MOTOR HIGH TEMPERATURE		DI			
	MOTOR DISCONNECT POSITION		DO			
BPSFP-03	VFD READY STATUS	BP-CP-2	DO			0 - 60 HZ
BELT PRESS SLUDGE FEED PUMP	VFD CALL TO RUN		DI			
	VFD SPEED CONTROL		AI			
	VFD SPEED REFERENCE		AO			
	VFD FAULT		DO			
	AUTO MODE		DO			
	MOTOR HIGH TEMPERATURE		DI			
	MOTOR DISCONNECT POSITION		DO			
BPSFP-03	VFD READY STATUS	BP-CP-2	DO			0 - 60 HZ
BELT PRESS SLUDGE FEED PUMP	VFD CALL TO RUN		DI			
	VFD SPEED CONTROL		AI			
	VFD SPEED REFERENCE		AO			
	VFD FAULT		DO			
	AUTO MODE		DO			
	MOTOR HIGH TEMPERATURE		DI			
	MOTOR DISCONNECT POSITION		DO			
PFS-02	VFD READY STATUS	BP-PFS-02	DO			0 - 60 HZ
DEWATERING POLYMER PUMP	VFD CALL TO RUN		DI			
	VFD SPEED CONTROL		AI			
	VFD SPEED REFERENCE		AO			
	VFD FAULT		DO			
	AUTO MODE		DO			
	MOTOR HIGH TEMPERATURE		DI			
	MOTOR DISCONNECT POSITION		DO			
PFS-CP-02	COMMUNICATION LINK	BP-CP-02	DO			
FE-2	MAGNETIC FLOW METER	FIT-2	DI			
FIT-2	MAGNETIC FLOW TRANSMITTER	BP-CP-02	DO			
PS-01	PRESSURE SWITCH	BP-CP-02	DO			
P-101	VFD READY STATUS	ATAD-CP	DO			0 - 60 HZ
THERM JET MOTIVE PUMP	VFD CALL TO RUN		DI			
	VFD SPEED CONTROL		AI			
	VFD SPEED REFERENCE		AO			
	VFD FAULT		DO			
	AUTO MODE		DO			
	MOTOR HIGH TEMPERATURE		DI			
	MOTOR DISCONNECT POSITION		DO			
FP-1	VFD READY STATUS	ATAD-CP	DO			0 - 60 HZ
FOAM PUMP	VFD CALL TO RUN		DI			
	VFD SPEED CONTROL		AI			
	VFD SPEED REFERENCE		AO			
	VFD FAULT		DO			
	AUTO MODE		DO			
	MOTOR HIGH TEMPERATURE		DI			
	MOTOR DISCONNECT POSITION		DO			
JMP-2	VFD READY STATUS	ATAD-CP	DO			0 - 60 HZ
SNDR JET MOTIVE PUMP	VFD CALL TO RUN		DI			
	VFD SPEED CONTROL		AI			
	VFD SPEED REFERENCE		AO			
	VFD FAULT		DO			
	AUTO MODE		DO			
	MOTOR HIGH TEMPERATURE		DI			
	MOTOR DISCONNECT POSITION		DO			
TP-1	VFD READY STATUS	ATAD-CP	DO			0 - 60 HZ
TRANSFER PUMP	VFD CALL TO RUN		DI			
	VFD SPEED CONTROL		AI			
	VFD SPEED REFERENCE		AO			
	VFD FAULT		DO			
	AUTO MODE		DO			
	MOTOR HIGH TEMPERATURE		DI			
	MOTOR DISCONNECT POSITION		DO			
BL-1	VFD READY STATUS	ATAD-CP	DO			0 - 60 HZ
THERMAL BLOWER 1	VFD CALL TO RUN		DI			
	VFD SPEED CONTROL		AI			
	VFD SPEED REFERENCE		AO			
	VFD FAULT		DO			
	AUTO MODE		DO			
	MOTOR HIGH TEMPERATURE		DI			
	MOTOR DISCONNECT POSITION		DO			
TP-2	VFD READY STATUS	ATAD-CP	DO			0 - 60 HZ
TRANSFER PUMP 2	VFD CALL TO RUN		DI			
	VFD SPEED CONTROL		AI			
	VFD SPEED REFERENCE		AO			
	VFD FAULT		DO			
	AUTO MODE		DO			
	MOTOR HIGH TEMPERATURE		DI			
	MOTOR DISCONNECT POSITION		DO			
BL-2	VFD READY STATUS	ATAD-CP	DO			0 - 60 HZ
THERMAL BLOWER 2	VFD CALL TO RUN		DI			
	VFD SPEED CONTROL		AI			
	VFD SPEED REFERENCE		AO			
	VFD FAULT		DO			
	AUTO MODE		DO			
	MOTOR HIGH TEMPERATURE		DI			
	MOTOR DISCONNECT POSITION		DO			

MHE ENGINEERING
33 Airport Center Drive, Suite 202
New Windsor, NY 12553
(845) 567-3100
111 Wheatfield Drive, Suite 1
Milford, PA 18337
(570) 296-2765

BID ADDENDUM

JADE STONE ENGINEERING

STATE OF NEW YORK
JEFFREY E. ROBINSON
095896
LICENSED PROFESSIONAL ENGINEER

HAZARDOUS MATERIAL NOTE:
THE SERVICES PROVIDED BY MHE, INCLUDING ALL WORK DEPICTED ON MHE PLANS, DO NOT INCLUDE SERVICES RELATED TO THE IDENTIFICATION, CONTROLS OR HANDLING OF HAZARDOUS MATERIALS, INCLUDING SUCH MATERIALS AS ASBESTOS AND LEAD PAINT. ALL TESTING, IDENTIFICATION, ABATEMENT, CONTROLS, AND HANDLING OF HAZARDOUS MATERIALS SHALL BE UNDERTAKEN BY A HAZARDOUS MATERIAL CONSULTANT AND CERTIFIED PROFESSIONALS. IF SUCH MATERIALS HAVE BEEN IDENTIFIED, CONTRACTOR WILL COMMUNICATE DIRECTLY WITH HAZARDOUS MATERIAL PROFESSIONAL FOR THE PERFORMANCE OF ANY WORK ON OR ADJACENT TO SAID MATERIALS. IF UNIDENTIFIED MATERIALS OF CONCERN ARE ENCOUNTERED WHILE UNDERTAKING THE WORK SHOWN HEREON, CONTRACTOR SHALL IMMEDIATELY NOTIFY ENGINEER AND OWNER, AND SHALL OBTAIN DIRECTION FROM THE HAZARDOUS MATERIAL CONSULTANT PRIOR TO THE CONTINUATION OF WORK INVOLVING SUSPECTED MATERIAL.

UDIG·NY SAFE DIGGING STARTS HERE
CALL 811

UNAUTHORIZED ADDITION OR ALTERATION OF THIS PLAN IS A VIOLATION OF SECTION 7209(2) OF THE NEW YORK STATE EDUCATION LAW.

ALL PRODUCTION & INTELLECTUAL PROPERTY RIGHT RESERVED ©

CAESARS LANE WWTP EXPANSION PROJECT: PHASE 2
145 CAESARS LN.
NEW WINDSOR, NY 12553
FOR TOWN OF NEW WINDSOR
555 UNION AVE.
NEW WINDSOR, NY 12553

ELECTRICAL SCHEDULES

REVISIONS

NO.	DESCRIPTION	DATE

ISSUED DATE:	06 JUNE, 2025
DESIGN BY:	RRM
DRAWN BY:	CDJ
CHECKED BY:	MGR
REVIEWED BY:	JER

SHEET NO.
E-050

PROJECT # 18-732 PHASE #

I/O TABLE (7 OF 11)

EQUIPMENT	FUNCTION	HOMERUN	I/O TYPE	INDICATE	SURGE PROTECTION	UNITS/RANGE
BL-3	VFD READY STATUS	ATAD-CP	DO			0 - 60 HZ
SNDR BLOWER	VFD CALL TO RUN		DI			
	VFD SPEED CONTROL		AI			
	VFD SPEED REFERENCE		AO			
	VFD FAULT		DO			
	AUTO MODE		DO			
	MOTOR HIGH TEMPERATURE		DI			
	MOTOR DISCONNECT POSITION		DO			
FAN-1	VFD READY STATUS	ATAD-CP	DO			0 - 60 HZ
OFFGAS FAN	VFD CALL TO RUN		DI			
	VFD SPEED CONTROL		AI			
	VFD SPEED REFERENCE		AO			
	VFD FAULT		DO			
	AUTO MODE		DO			
	MOTOR HIGH TEMPERATURE		DI			
	MOTOR DISCONNECT POSITION		DO			
BL-4	VFD READY STATUS	ATAD-CP	DO			0 - 60 HZ
SPARE BLOWER	VFD CALL TO RUN		DI			
	VFD SPEED CONTROL		AI			
	VFD SPEED REFERENCE		AO			
	VFD FAULT		DO			
	AUTO MODE		DO			
	MOTOR HIGH TEMPERATURE		DI			
	MOTOR DISCONNECT POSITION		DO			
RAD-1	RADAR FOAM LEVEL	ATAD-CP	DI			
ORP-1	ORP PROBE	LIT-ORP-2	DO			
LIT-ORP-1	ORP PROBE TRANSMITTER	ATAD-CP	DI			
VAC-1	VACUUM SENSOR	ATAD-CP	DI			
LV-1	LEVEL SENSOR	LIT-LVL-1	DO			
LIT-LV-1	LEVEL TRANSMITTER	ATAD-CP	DI			
RAD-2	RADAR FOAM LEVEL	ATAD-CP	DI			
ORP-2	ORP PROBE	LIT-ORP-2	DO			
LIT-ORP-2	ORP PROBE TRANSMITTER	ATAD-CP	DI			
VAC-2	VACUUM SENSOR	ATAD-CP	DI			
LV-2	LEVEL SENSOR	LIT-LV-2	DO			
LIT-LV-2	LEVEL TRANSMITTER	ATAD-CP	DI			
RAD-3	RADAR FOAM LEVEL	ATAD-CP	DI			
ORP-3	ORP PROBE	LIT-ORP-3	DO			
LIT-ORP-3	ORP PROBE TRANSMITTER	ATAD-CP	DI			
VAC-3	VACUUM SENSOR	ATAD-CP	DI			
LV-3	LEVEL SENSOR	LIT-LV-3	DO			
LIT-LV-3	LEVEL TRANSMITTER	ATAD-CP	DI			
FP-01	RUNNING	FPCP-700	DO			
FILTRATE PUMP	FAULT		DI			
	CALL TO RUN		DO			
	MOTOR HIGH TEMPERATURE		DI			
FP-02	RUNNING	FPCP-700	DO			
FILTRATE PUMP	FAULT		DI			
	CALL TO RUN		DO			
	MOTOR HIGH TEMPERATURE		DI			
FLS-700	LOW LEVEL ALARM FLOAT	FPCP-700	DI			
FLS-701	HIGH LEVEL ALARM FLOAT	FPCP-700	DI			
FLS-702	LAG PUMP ON	FPCP-700	DI			
FLS-703	LEAD PUMP ON	FPCP-700	DI			
FLS-704	PUMP OFF	FPCP-700	DI			
CTP-01	SPEED CONTROL ANALOG INPUT	R I/O-1	AI			
TRANSFER PUMP	SPEED REFERENCE ANALOG INPUT		AI			
	RUN/STOP INPUT		AO			
	GENERAL ALARMS/STATUS INPUTS		DI			
CTP-02	SPEED CONTROL ANALOG INPUT	R I/O-1	AI			
TRANSFER PUMP	SPEED REFERENCE ANALOG INPUT		AI			
	RUN/STOP INPUT		AO			
	GENERAL ALARMS/STATUS INPUTS		DI			
15-P-301-A	SPEED CONTROL ANALOG INPUT	R I/O-1	AI			
NAOH DUAL METERING PUMP	SPEED REFERENCE ANALOG INPUT		AI			
	RUN/STOP INPUT		AO			
	GENERAL ALARMS/STATUS INPUTS		DI			
15-P-301-B	SPEED CONTROL ANALOG INPUT	R I/O-1	AI			
NAOH DUAL METERING PUMP	SPEED REFERENCE ANALOG INPUT		AI			
	RUN/STOP INPUT		AO			
	GENERAL ALARMS/STATUS INPUTS		DI			
23-P-101-A	SPEED CONTROL ANALOG INPUT	R I/O-1	AI			
SODIUM HYPO METERING PUMPS	SPEED REFERENCE ANALOG INPUT		AI			
	RUN/STOP INPUT		AO			
	GENERAL ALARMS/STATUS INPUTS		DI			
23-P-101-B	SPEED CONTROL ANALOG INPUT	R I/O-1	AI			
SODIUM HYPO METERING PUMPS	SPEED REFERENCE ANALOG INPUT		AI			
	RUN/STOP INPUT		AO			
	GENERAL ALARMS/STATUS INPUTS		DI			
PS-AV-01	RUNNING	R I/O-1	DO			
ACTUATOR CONTROL VALVE #1	FAULT		DI			
	CALL TO RUN		DO			
	MOTOR HIGH TEMPERATURE		DI			
PS-AV-02	RUNNING	R I/O-1	DO			
ACTUATOR CONTROL VALVE #2	FAULT		DI			
	CALL TO RUN		DO			
	MOTOR HIGH TEMPERATURE		DI			
PS-AV-03	RUNNING	R I/O-1	DO			
ACTUATOR CONTROL VALVE #3	FAULT		DI			
	CALL TO RUN		DO			
	MOTOR HIGH TEMPERATURE		DI			
PS-AV-04	RUNNING	R I/O-1	DO			
ACTUATOR CONTROL VALVE #4	FAULT		DI			
	CALL TO RUN		DO			
	MOTOR HIGH TEMPERATURE		DI			
TEMP-500	TEMPERATURE SENSOR	R I/O-1	DI			
TEMP-501	TEMPERATURE SENSOR	R I/O-1	DI			
TEMP-502	TEMPERATURE SENSOR	R I/O-1	DI			
TEMP-503	TEMPERATURE SENSOR	R I/O-1	DI			
LDS-500	LEAK DETECTION SENSOR	R I/O-1	DO			
LDS-501	LEAK DETECTION SENSOR	R I/O-1	DO			
LDS-502	LEAK DETECTION SENSOR	R I/O-1	DO			
LDS-503	LEAK DETECTION SENSOR	R I/O-1	DO			
LDS-504	LEAK DETECTION SENSOR	R I/O-1	DO			
LDS-505	LEAK DETECTION SENSOR	R I/O-1	DO			
15-LIT-301	ULTRASONIC LEVEL SENSOR	15-AE-301	DO			
15-AE-301	ULTRASONIC LEVEL TRANSMITTER	R I/O-1	DI			
15-LIT-302	ULTRASONIC LEVEL SENSOR	15-AE-302	DO			
15-AE-302	ULTRASONIC LEVEL TRANSMITTER	R I/O-1	DI			
23-LIT-101	ULTRASONIC LEVEL SENSOR	23-AE-101	DO			

I/O TABLE (8 OF 11)

EQUIPMENT	FUNCTION	HOMERUN	I/O TYPE	INDICATE	SURGE PROTECTION	UNITS/RANGE
23-AE-101	ULTRASONIC LEVEL TRANSMITTER	R I/O-1	DI			
23-LIT-102	ULTRASONIC LEVEL SENSOR	23-AE-102	DO			
23-AE-102	ULTRASONIC LEVEL TRANSMITTER	R I/O-1	DI			
23-LIT-103	ULTRASONIC LEVEL SENSOR	23-AE-103	DO			
23-AE-103	ULTRASONIC LEVEL TRANSMITTER	R I/O-1	DI			
ES-100	EMERGENCY EYEWASH/SHOWER	R I/O-1	DI			
FLS-500	FLOAT SWITCH	R I/O-1	DI			
FLS-501	FLOAT SWITCH	R I/O-1	DI			
FLS-502	FLOAT SWITCH	R I/O-1	DI			
FILL STATION ALARM PANEL	COMMUNICATION LINK (HARDWIRED)	R I/O-1	DO			
FILL STATION ALARM PANEL	COMMUNICATION LINK (HARDWIRED)	R I/O-1	DO			
ATS	GENERATOR START (RUNNING)	MCP	DI			
	NORMAL POWER OFF		DO			
	EMERGENCY POWER OFF		DI			
	FAULT		DO			
	GENERATOR TEST ACTIVE		DO			
SURGE PROTECTION DEVICE	COMMUNICATION LINK (ETHERNET)	R I/O-1	DO			
KWHD	COMMUNICATION LINK (ETHERNET)	R I/O-1	DO			
MBR-CP	COMMUNICATION LINK (ETHERNET)	R I/O-1	DO			
CFCP-1	COMMUNICATION LINK (HARDWIRED)	R I/O-1	DO			
HVAC-500	COMMUNICATION LINK (HARDWIRED)	R I/O-1	DO			
FACP-500	COMMUNICATION LINK (ETHERNET)	R I/O-1	DO			
	COMMUNICATION LINK (HARDWIRED)					
SCP-500	COMMUNICATION LINK (ETHERNET)	R I/O-1	DO			
GEN. ANNUNCIATOR AND DISPLAY	COMMUNICATION LINK (HARDWIRED)	R I/O-1	DO			
	COMMUNICATION LINK (ETHERNET)					
IP-CP-1	COMMUNICATION LINK (FIBER)	R I/O-1	DO			
DPCP-01	COMMUNICATION LINK (FIBER)	R I/O-1	DO			
PC-CP-1	COMMUNICATION LINK (HARDWIRED)	R I/O-1	DO			
PC-CP-2	COMMUNICATION LINK (HARDWIRED)	R I/O-1	DO			
PC-CP-3	COMMUNICATION LINK (HARDWIRED)	R I/O-1	DO			
PC-CP-4	COMMUNICATION LINK (HARDWIRED)	R I/O-1	DO			
SP-CP-1	COMMUNICATION LINK (HARDWIRED)	R I/O-1	DO			
SP-CP-2	COMMUNICATION LINK (HARDWIRED)	R I/O-1	DO			
SP-CP-3	COMMUNICATION LINK (HARDWIRED)	R I/O-1	DO			
SP-CP-4	COMMUNICATION LINK (HARDWIRED)	R I/O-1	DO			
PSP-CP-800	COMMUNICATION LINK (HARDWIRED)	R I/O-1	DO			
R I/O-2	COMMUNICATION LINK (FIBER)	R I/O-1	DO			
R I/O-3	COMMUNICATION LINK (FIBER)	R I/O-1	DO			
R I/O-4	COMMUNICATION LINK (FIBER)	R I/O-1	DO			
DBSC (E.T.R.)	COMMUNICATION LINK (FIBER)	R I/O-1	DO			
GRTPD-01	RUNNING	GRT-CP-01	DO			
GRIT PROPELLER DRIVE	FAULT		DI			
	CALL TO RUN		DO			
	MOTOR HIGH TEMPERATURE		DI			
GRTP-01	RUNNING	GRT-CP-01	DO			
GRIT PUMP	FAULT		DI			
	CALL TO RUN		DO			
	MOTOR HIGH TEMPERATURE		DI			
GRTW-01	RUNNING	GRT-CP-01	DO			
GRIT WASHER	FAULT		DI			
	CALL TO RUN		DO			
	MOTOR HIGH TEMPERATURE		DI			
GRTPD-02	RUNNING	GRT-CP-02	DO			
GRIT PROPELLER DRIVE	FAULT		DI			
	CALL TO RUN		DO			
	MOTOR HIGH TEMPERATURE		DI			
GRTP-02	RUNNING	GRT-CP-02	DO			
GRIT PUMP	FAULT		DI			
	CALL TO RUN		DO			
	MOTOR HIGH TEMPERATURE		DI			
GRTW-02	RUNNING	GRT-CP-02	DO			
GRIT WASHER	FAULT		DI			
	CALL TO RUN		DO			
	MOTOR HIGH TEMPERATURE		DI			
UE-01	FLUME LEVEL ELEMENT	UT-01	DO			
UT-01	FLUME LEVEL TRANSMITTER	GRT-CP-02	DO			
MBS-01	VFD READY STATUS	BS-CP-1	DO			0 - 60 HZ
MECHANICAL BAR SCREEN (E.T.R.)	VFD CALL TO RUN		DI			
	VFD SPEED CONTROL		AI			
	VFD SPEED REFERENCE		AO			
	VFD FAULT		DO			
	AUTO MODE		DO			
	MOTOR HIGH TEMPERATURE		DI			
	MOTOR DISCONNECT POSITION		DO			
LCS-1	HAND	BS-CP-1	DO			
LOCAL CONTROL STATION (E.T.R.)	OFF		DI			
	AUTO		DO			
	FORWARD		AO			
	OFF		AO			
	REVERSE		AO			
	CYCLE		AO			
	RESET		AO			
	EMERGENCY STOP		DI			
BSC-1	VFD READY STATUS	BS-CP-1	DO			0 - 60 HZ
WASHER COMPACTOR (E.T.R.)	VFD CALL TO RUN		DI			
	VFD SPEED CONTROL		AI			
	VFD SPEED REFERENCE		AO			
	VFD FAULT		DO			
	AUTO MODE		DO			
	MOTOR HIGH TEMPERATURE		DI			
	MOTOR DISCONNECT POSITION		DO			
ULS-1 (E.T.R.)	DOWNSTREAM ULTRASONIC LEVEL SENSOR	ULT-1	DO			
ULT-1 (E.T.R.)	ULTRASONIC LEVEL TRANSMITTER	BS-CP-1	DI			
ULS-2 (E.T.R.)	DOWNSTREAM ULTRASONIC LEVEL SENSOR	ULT-2	DO			
ULT-2 (E.T.R.)	ULTRASONIC LEVEL TRANSMITTER	BS-CP-1	DI			
FLS-1 (E.T.R.)	HIGH LEVEL FLOAT SWITCH	BS-CP-1	DI			
SV-1 (E.T.R.)	SOLENOID VALVE	BS-CP-1	DI			
SV-2 (E.T.R.)	COMPACTOR SOLENOID VALVE	BS-CP-1	DI			
SV-3 (E.T.R.)	WASH MODULE SOLENOID VALVE	BS-CP-1	DI			
MBS-02	VFD READY STATUS	BS-CP-2	DO			0 - 60 HZ
BAR SCREEN DRIVE	VFD CALL TO RUN		DI			
	VFD SPEED CONTROL		AI			
	VFD SPEED REFERENCE		AO			
	VFD FAULT		DO			
	AUTO MODE		DO			
	MOTOR HIGH TEMPERATURE		DI			
	MOTOR DISCONNECT POSITION		DO			

I/O TABLE (9 OF 11)

EQUIPMENT	FUNCTION	HOMERUN	I/O TYPE	INDICATE	SURGE PROTECTION	UNITS/RANGE
LCS-2	HAND	BS-CP-1	DO			0 - 60 HZ
LOCAL CONTROL STATION	OFF		DI			
	AUTO		DO			
	FORWARD		AO			
	OFF		AO			
	REVERSE		AO			
	CYCLE		AO			
	RESET		AO			
	EMERGENCY STOP		DI			
MBS-02	VFD READY STATUS	BS-CP-2	DO			0 - 60 HZ
BAR SCREEN DRIVE	VFD CALL TO RUN		DI			
	VFD SPEED CONTROL		AI			
	VFD SPEED REFERENCE		AO			
	VFD FAULT		DO			
	AUTO MODE		DO			
	MOTOR HIGH TEMPERATURE		DI			
	MOTOR DISCONNECT POSITION		DO			
BCS-02	VFD READY STATUS	BS-CP-2	DO			0 - 60 HZ
BAR SCREEN DRIVE	VFD CALL TO RUN		DI			
	VFD SPEED CONTROL		AI			
	VFD SPEED REFERENCE		AO			
	VFD FAULT		DO			
	AUTO MODE		DO			
	MOTOR HIGH TEMPERATURE		DI			
	MOTOR DISCONNECT POSITION		DO			
ULS-3	DOWNSTREAM ULTRASONIC LEVEL SENSOR	ULT-3	DO			
ULT-3	ULTRASONIC LEVEL TRANSMITTER	BS-CP-2	DI			
ULS-4	DOWNSTREAM ULTRASONIC LEVEL SENSOR	ULT-4	DO			
ULT-4	ULTRASONIC LEVEL TRANSMITTER	BS-CP-2	DI			
FLS-3	HIGH LEVEL FLOAT SWITCH	BS-CP-1	DI			
SV-4	SOLENOID VALVE	BS-CP-1	DI			
SV-5	COMPACTOR SOLENOID VALVE	BS-CP-1	DI			
SV-6	WASH MODULE SOLENOID VALVE	BS-CP-1	DI			
R I/O-1	COMMUNICATION LINK (FIBER)	MCP	DO			
SURGE PROTECTION DEVICE	COMMUNICATION LINK (ETHERNET)	MCP	DO			
KWHD	COMMUNICATION LINK (ETHERNET)	MCP	DO			
SCP-900	COMMUNICATION LINK (ETHERNET)	MCP	DO			
FACP	COMMUNICATION LINK (HARDWIRED)	MCP	DO			
	COMMUNICATION LINK (ETHERNET)					
DATA RACK	COMMUNICATION LINK (ETHERNET)	MCP	DO			
WFS-900	WET FLOOR SENSOR	MCP	DO			
WFS-901	WET FLOOR SENSOR	MCP	DO			
TEMP-900	TEMPERATURE SENSOR	MCP	DO			
TEMP-901	TEMPERATURE SENSOR	MCP	DO			
DESKTOP COMPUTER	ETHERNET TUNNEL CLIENT SOFTWARE	TABLET	DO			
CHLOR-CWP-1	RUNNING	DBSC	DO			
CARRIER PUMP 1 (E.T.R.)	FAULT		DI			
	CALL TO RUN		DO			
	MOTOR HIGH TEMPERATURE		DI			
CHLOR-CWP-2	RUNNING	DBSC	DO			
CARRIER PUMP 2 (E.T.R.)	FAULT		DI			
	CALL TO RUN		DO			
	MOTOR HIGH TEMPERATURE		DI			
DECHLOR-CWP-1	RUNNING	DBSC	DO			
CARRIER PUMP 2 (E.T.R.)	FAULT		DI			
	CALL TO RUN		DO			
	MOTOR HIGH TEMPERATURE		DI			
FE-1 (E.T.R.)	FLOW ELEMENT	FET-1	DO			
FET-1 (E.T.R.)	FLOW ELEMENT TRANSMITTER	DBSC	DI			
FE-2 (E.T.R.)	CCT CHLORINE ANALYZER	FET-2	DO			
FET-2 (E.T.R.)	CHLORINE CONTROLLER	DBSC	DI			
FE-3 (E.T.R.)	RESIDUAL CHLORINE ANALYZER	FET-3	DO			
FET-3 (E.T.R.)	CHLORINE CONTROLLER	DBSC	DI			
FE-4 (E.T.R.)	LEVEL ELEMENT	FET-4	DO			
FET-4 (E.T.R.)	SODIUM HYPO LEVEL TRANSMITTER 1	DBSC	DI			
FE-5 (E.T.R.)	LEVEL ELEMENT	FET-5	DO			
FET-5 (E.T.R.)	SODIUM HYPO LEVEL TRANSMITTER 2	DBSC	DI			
FE-6 (E.T.R.)	LEVEL ELEMENT	FET-6	DO			
FET-6 (E.T.R.)	SODIUM BISULFATE LEVEL TRANSMITTER 1	DBSC	DI			
FE-7 (E.T.R.)	LEVEL ELEMENT	FET-7	DO			
FET-7 (E.T.R.)	SODIUM BISULFATE LEVEL TRANSMITTER 2	DBSC	DI			
DOS-AE-1	DISSOLVED OXYGEN ELEMENT	DOS-1	DO			
DOS-1	DISSOLVED OXYGEN TRANSMITTER	DBSC	DI			
DOS-AE-2	DISSOLVED OXYGEN ELEMENT	DOS-2	DO			
DOS-2	DISSOLVED OXYGEN TRANSMITTER	DBSC	DI			
UT-AE-03	ULTRASONIC LEVEL ELEMENT	UT-03	DO			
UT-03	ULTRASONIC TRANSMITTER	DBSC	DI			
UT-AE-04	ULTRASONIC LEVEL ELEMENT	UT-04	DO			
UT-04	ULTRASONIC TRANSMITTER	DBSC	DI			
PWCP-600	COMMUNICATION LINK (ETHERNET)	DBSC	DO			
IP-01	VFD READY STATUS	IP-CP-1	DO			0 - 60 HZ
INFLUENT PUMP #1	VFD CALL TO RUN		DI			
	VFD SPEED CONTROL		AI			
	VFD SPEED REFERENCE		AO			
	VFD FAULT		DO			
	AUTO MODE		DO			
	MOTOR HIGH TEMPERATURE		DI			
	MOTOR DISCONNECT POSITION		DO			
IP-02	VFD READY STATUS	IP-CP-1	DO			0 - 60 HZ
INFLUENT PUMP #2	VFD CALL TO RUN		DI			
	VFD SPEED CONTROL		AI			
	VFD SPEED REFERENCE		AO			
	VFD FAULT		DO			
	AUTO MODE		DO			
	MOTOR HIGH TEMPERATURE		DI			
	MOTOR DISCONNECT POSITION		DO			
IP-03	VFD READY STATUS	IP-CP-1	DO			0 - 60 HZ
INFLUENT PUMP #3	VFD CALL TO RUN		DI			
	VFD SPEED CONTROL		AI			
	VFD SPEED REFERENCE		AO			
	VFD FAULT		DO			
	AUTO MODE		DO			
	MOTOR HIGH TEMPERATURE		DI			
	MOTOR DISCONNECT POSITION		DO			
LS-5	LEVEL SENSOR	LT-5	DO			
LT-5	LEVEL TRANSMITTER	IP-CP-1	DI			
LS-6	LEVEL SENSOR	LT-6	DO			
LT-6	LEVEL TRANSMITTER	IP-CP-1	DI			
FL-3	LEVEL FLOAT	IP-CP-1	DI			
FL-4	LEVEL FLOAT	IP-CP-1	DI			

MHE ENGINEERING

33 Airport Center Drive, Suite 202
New Windsor, NY 12553
(845) 567-3100

111 Wheatfield Drive, Suite 1
Milford, PA 18337
(570) 296-2765

BID ADDENDUM

JADE STONE ENGINEERING

STATE OF NEW YORK · JEFFREY E. ROBINSON · 095896 · LICENSED PROFESSIONAL ENGINEER

HAZARDOUS MATERIAL NOTE:

THE SERVICES PROVIDED BY MHE, INCLUDING ALL WORK DEPICTED ON MHE PLANS, DO NOT INCLUDE SERVICES RELATED TO THE IDENTIFICATION, CONTROLS OR HANDLING OF HAZARDOUS MATERIALS, INCLUDING SUCH MATERIALS AS ASBESTOS AND LEAD PAINT. ALL TESTING, IDENTIFICATION, ABATEMENT, CONTROLS, AND HANDLING OF HAZARDOUS MATERIALS SHALL BE UNDERTAKEN BY A HAZARDOUS MATERIAL CONSULTANT AND CERTIFIED PROFESSIONALS. IF SUCH MATERIALS HAVE BEEN IDENTIFIED, CONTRACTOR WILL COMMUNICATE DIRECTLY WITH HAZARDOUS MATERIAL PROFESSIONAL FOR THE PERFORMANCE OF ANY WORK ON OR ADJACENT TO SAID MATERIALS. IF UNIDENTIFIED MATERIALS OF CONCERN ARE ENCOUNTERED WHILE UNDERTAKING THE WORK SHOWN HEREON, CONTRACTOR SHALL IMMEDIATELY NOTIFY ENGINEER AND OWNER, AND SHALL OBTAIN DIRECTION FROM THE HAZARDOUS MATERIAL CONSULTANT PRIOR TO THE CONTINUATION OF WORK INVOLVING SUSPECTED MATERIAL.

UDIG·NY SAFE DIGGING STARTS HERE CALL 811

UNAUTHORIZED ADDITION OR ALTERATION OF THIS PLAN IS A VIOLATION OF SECTION 7209(2) OF THE NEW YORK STATE EDUCATION LAW.

ALL PRODUCTION & INTELLECTUAL PROPERTY RIGHT RESERVED ©

CAESARS LANE WWTP EXPANSION PROJECT: PHASE 2

145 CAESARS LN.
NEW WINDSOR, NY 12553

FOR TOWN OF NEW WINDSOR
555 UNION AVE.
NEW WINDSOR, NY 12553

ELECTRICAL SCHEDULES

REVISIONS

NO.	DESCRIPTION	DATE

ISSUED DATE:	06 JUNE, 2025
DESIGN BY:	RRM
DRAWN BY:	CDJ
CHECKED BY:	MGR
REVIEWED BY:	JER

SHEET NO.

E-051

PROJECT # 18-732 PHASE #

I/O TABLE (10 OF 11)

EQUIPMENT	FUNCTION	HOMERUN	I/O TYPE	INDICATE	SURGE PROTECTION	UNITS/RANGE
FL-5	LEVEL FLOAT	IP-CP-1	DI			
FL-6	LEVEL FLOAT	IP-CP-1	DI			
TEMP-504	TEMPERATURE SENSOR	IP-CP-1	DI			
WFS-504	WET FLOOR SENSOR	IP-CP-1	DI			
SURGE PROTECTION DEVICE	COMMUNICATION LINK (ETHERNET)	IP-CP-1	DO			
MS-CP-1	COMMUNICATION LINK (ETHERNET)	IP-CP-1	DO			
MS-CP-2	COMMUNICATION LINK (ETHERNET)	IP-CP-1	DO			
RDT-01	RUNNING	RDT-CP	DO			
ROTARY DRUM THICKENER	FAULT		DI			
	CALL TO RUN		DO			
	MOTOR HIGH TEMPERATURE		DI			
RDT-FP-01	VFD READY STATUS	RDT-CP	DO			0 - 60 HZ
SLUDGE FEED PUMP	VFD CALL TO RUN		DI			
	VFD SPEED CONTROL		AI			
	VFD SPEED REFERENCE		AO			
	VFD FAULT		DO			
	AUTO MODE		DO			
	MOTOR HIGH TEMPERATURE		DI			
	MOTOR DISCONNECT POSITION		DO			
RDT-WW-01	VFD READY STATUS	RDT-CP	DO			0 - 60 HZ
SLUDGE FEED PUMP	VFD CALL TO RUN		DI			
	VFD SPEED CONTROL		AI			
	VFD SPEED REFERENCE		AO			
	VFD FAULT		DO			
	AUTO MODE		DO			
	MOTOR HIGH TEMPERATURE		DI			
	MOTOR DISCONNECT POSITION		DO			
RDT-TSP-01	RUNNING	RDT-CP	DO			
THICKENED SLUDGE PUMP	FAULT		DI			
	CALL TO RUN		DO			
	MOTOR HIGH TEMPERATURE		DI			
RDT-PB-01	VFD READY STATUS	PFS-02	DO			0 - 60 HZ
POLYMER PUMP	VFD CALL TO RUN		DI			
	VFD SPEED CONTROL		AI			
	VFD SPEED REFERENCE		AO			
	VFD FAULT		DO			
	AUTO MODE		DO			
	MOTOR HIGH TEMPERATURE		DI			
	MOTOR DISCONNECT POSITION		DO			
FE-3	MAGNETIC FLOW METER	FIT-3	DO			
FIT-3	MAGNETIC FLOW TRANSMITTER	RDT-CP	DI			
PS-03	PRESSURE SWITCH	RDT-CP	DI			
P-SP-01	RUNNING	PSCP-800	DO			
PRIMARY CLARIFIER PUMP NO. 1	FAULT		DI			
	CALL TO RUN		DO			
	MOTOR HIGH TEMPERATURE		DI			
P-SP-02	RUNNING	PSCP-800	DO			
PRIMARY CLARIFIER PUMP NO. 2	FAULT		DI			
	CALL TO RUN		DO			
	MOTOR HIGH TEMPERATURE		DI			
PS-SP-01	DISCHARGE PRESSURE SWITCH NO. 1	PSCP-800	DI			
PS-SP-02	DISCHARGE PRESSURE SWITCH NO. 2	PSCP-800	DI			
FLS-800	HIGH LEVEL BACKUP FLOAT	PSCP-800	DI			
FLS-801	LOW LEVEL BACKUP FLOAT	PSCP-800	DI			
LT-800	LEVEL TRANSDUCER	LTT-800	DO			
LTT-800	LEVEL TRANSDUCER	PSCP-800	DI			
SUBP-01	RUNNING	DPCP-01	DO			
SUBMERSIBLE PUMP	FAULT		DI			
	CALL TO RUN		DO			
	MOTOR HIGH TEMPERATURE		DI			
SUBP-02	RUNNING	DPCP-01	DO			
SUBMERSIBLE PUMP	FAULT		DI			
	CALL TO RUN		DO			
	MOTOR HIGH TEMPERATURE		DI			
FLS-01	HIGH LEVEL ALARM	DPCP-01	DI			
FLS-02	LAG PUMP ON	DPCP-01	DI			
FLS-03	LEAD PUMP ON	DPCP-01	DI			
FLS-04	PUMP OFF	DPCP-01	DI			
LT-01	LEVEL TRANSDUCER	DPCP-01	DI			
SUBP-03	RUNNING	DPCP-02	DO			
SUBMERSIBLE PUMP	FAULT		DI			
	CALL TO RUN		DO			
	MOTOR HIGH TEMPERATURE		DI			
SUBP-04	RUNNING	DPCP-02	DO			
SUBMERSIBLE PUMP	FAULT		DI			
	CALL TO RUN		DO			
	MOTOR HIGH TEMPERATURE		DI			
FLS-05	HIGH LEVEL ALARM	DPCP-02	DI			
FLS-06	LAG PUMP ON	DPCP-02	DI			
FLS-07	LEAD PUMP ON	DPCP-02	DI			
FLS-08	PUMP OFF	DPCP-02	DI			
LT-02	LEVEL TRANSDUCER	DPCP-02	DI			
SP-01	RUNNING	SP-CP-1	DO			
SCUM PUMP	FAULT		DI			
	CALL TO RUN		DO			
	MOTOR HIGH TEMPERATURE		DI			
FLS-01	HIGH LEVEL BACKUP FLOAT	SP-CP-1	DI			
FLS-02	HIGH LEVEL BACKUP FLOAT	SP-CP-1	DI			
LT-001	LEVEL TRANSDUCER	LTT-001	DI			
LTT-001	LEVEL TRANSMITTER	SP-CP-1	DO			
SP-02	RUNNING	SP-CP-2	DO			
SCUM PUMP	FAULT		DI			
	CALL TO RUN		DO			
	MOTOR HIGH TEMPERATURE		DI			
FLS-03	HIGH LEVEL BACKUP FLOAT	SP-CP-2	DI			
FLS-04	HIGH LEVEL BACKUP FLOAT	SP-CP-2	DI			
LT-002	LEVEL TRANSDUCER	LTT-002	DI			
LTT-002	LEVEL TRANSMITTER	SP-CP-2	DO			
SP-03	RUNNING	SP-CP-3	DO			
SCUM PUMP	FAULT		DI			
	CALL TO RUN		DO			
	MOTOR HIGH TEMPERATURE		DI			
FLS-05	HIGH LEVEL BACKUP FLOAT	SP-CP-3	DI			
FLS-06	HIGH LEVEL BACKUP FLOAT	SP-CP-3	DI			
LT-003	LEVEL TRANSDUCER	LTT-003	DI			
LTT-003	LEVEL TRANSMITTER	SP-CP-3	DO			

I/O TABLE (11 OF 11)

EQUIPMENT	FUNCTION	HOMERUN	I/O TYPE	INDICATE	SURGE PROTECTION	UNITS/RANGE
SP-04	RUNNING	SP-CP-4	DO			
SCUM PUMP	FAULT		DI			
	CALL TO RUN		DO			
	MOTOR HIGH TEMPERATURE		DI			
FLS-07	HIGH LEVEL BACKUP FLOAT	SP-CP-4	DI			
FLS-08	HIGH LEVEL BACKUP FLOAT	SP-CP-4	DI			
LT-004	LEVEL TRANSDUCER	LTT-004	DI			
LTT-004	LEVEL TRANSMITTER	SP-CP-4	DO			
WFS-700	WET FLOOR SENSOR	R I/O-2	DI			
WFS-701	WET FLOOR SENSOR	R I/O-2	DI			
TEMP-700	TEMPERATURE SENSOR	R I/O-2	DI			
TEMP-701	TEMPERATURE SENSOR	R I/O-2	DI			
BELT PRESS CONTROL PANEL (E.T.R.)	COMMUNICATION LINK (ETHERNET)	R I/O-2	DO			
BPCP-700	COMMUNICATION LINK (ETHERNET)	R I/O-2	DO			
HVAC-700	COMMUNICATION LINK (HARDWIRED)	R I/O-2	DO			
FPCP-700	COMMUNICATION LINK (HARDWIRED)	R I/O-2	DO			
FACP-700	COMMUNICATION LINK (HARDWIRED)	R I/O-2	DO			
	COMMUNICATION LINK (ETHERNET)					
SCP-700	COMMUNICATION LINK (HARDWIRED)	R I/O-2	DO			
DATA RACK	COMMUNICATION LINK (HARDWIRED)	R I/O-2	DO			
SURGE PROTECTION DEVICE	COMMUNICATION LINK (HARDWIRED)	R I/O-2	DO			
KWHD	COMMUNICATION LINK (HARDWIRED)	R I/O-2	DO			
TEMP-200	TEMPERATURE SENSOR	R I/O-3	DI			
TEMP-201	TEMPERATURE SENSOR	R I/O-3	DI			
TEMP-202	TEMPERATURE SENSOR	R I/O-3	DI			
WFS-200	WET FLOOR SENSOR	R I/O-3	DI			
HT-01	COMMUNICATION LINK (HARDWIRED)	R I/O-3	DO			
HT-02	COMMUNICATION LINK (HARDWIRED)	R I/O-3	DO			
UE-01	FLUME LEVEL ELEMENT	UT-01	DO			
UT-01	FLUME LEVEL TRANSMITTER	R I/O-3	DI			
SURGE PROTECTOR DEVICE	COMMUNICATION LINK (ETHERNET)	R I/O-3	DI			
KWHD	COMMUNICATION LINK (ETHERNET)	R I/O-3	DI			
SCP-4200	COMMUNICATION LINK (ETHERNET)	R I/O-3	DI			
BAR SCREEN CONTROL PANEL (E.T.R.)	COMMUNICATION LINK (HARDWIRED)	R I/O-3	DO			
	COMMUNICATION LINK (ETHERNET)					
BAR SCREEN BS-CP-2	COMMUNICATION LINK (HARDWIRED)	R I/O-3	DO			
	COMMUNICATION LINK (ETHERNET)					
GRT-CP-1	COMMUNICATION LINK (HARDWIRED)	R I/O-3	DO			
	COMMUNICATION LINK (ETHERNET)					
GRT-CP-2	COMMUNICATION LINK (HARDWIRED)	R I/O-3	DO			
	COMMUNICATION LINK (ETHERNET)					
GDSCP-200	COMMUNICATION LINK (HARDWIRED)	R I/O-3	DO			
CO	CARBON MONOXIDE/SMOKE DETECTOR	R I/O-3	DI			
TEMP-400	TEMPERATURE SENSOR	R I/O-4	DI			
TEMP-401	TEMPERATURE SENSOR	R I/O-4	DI			
WFS-1	WET FLOOR SENSOR	R I/O-4	DI			
WFS-2	WET FLOOR SENSOR	R I/O-4	DI			
RDT-400	COMMUNICATION LINK (ETHERNET)	R I/O-4	DO			
DPCP-02	COMMUNICATION LINK (HARDWIRED)	R I/O-4	DO			
SURGE PROTECTION DEVICE	COMMUNICATION LINK (ETHERNET)	R I/O-4	DO			
KWHD	COMMUNICATION LINK (ETHERNET)	R I/O-4	DO			
ATAD-CP	COMMUNICATION LINK (ETHERNET)	R I/O-4	DO			
SCP-400	COMMUNICATION LINK (ETHERNET)	R I/O-4	DO			
HVAC-400	COMMUNICATION LINK (HARDWIRED)	R I/O-4	DO			
FACP	COMMUNICATION LINK (HARDWIRED)	R I/O-4	DO			

GENERAL SCHEDULE NOTES:

1. I/O TABLE IS INTENDED TO GIVE A GENERAL PERSPECTIVE OF I/O QUANTITIES. FINAL I/O TO BE COORDINATED WITH EQUIPMENT MANUFACTURERS, OWNER, AND ENGINEER. PROVIDE 20% SPARE I/O CAPACITY IN ALL CONTROL PANELS PROVIDED AS PART OF THIS CONTRACT. REFER TO SPECIFICATIONS FOR ADDITIONAL INFORMATION.
2. REFER TO THE ELECTRICAL SINGLE LINE DIAGRAMS, RISER DIAGRAMS, AND SPECIFICATIONS FOR ADDITIONAL INFORMATION/REQUIREMENTS.
3. ALL AVAILABLE STATUS, ALARMS, AND CONTROL POINTS FOR THE WWTP PROCESS SYSTEMS SHALL BE INTEGRATED INTO THE CONTROL NETWORK. CONTRACTOR SHALL FIELD VERIFY AND COORDINATE WITH THE OWNER AND ENGINEER.
4. UNITS/RANGE COLUMN FOR INFORMATIONAL PURPOSES ONLY AND SHALL BE COORDINATED BY OTHERS.
5. GENERAL ABBREVIATIONS : DI - DIGITAL INPUT, DO - DATA OUTPUT, AI - ANALOG INPUT, AO - ANALOG OUTPUT

REMARKS:

1. ALL EXISTING SIGNALS (I/O) AVAILABLE FROM THE EXISTING EQUIPMENT ARE TO BE EXTENDED AND MODIFIED TO THE PROPOSED PANEL AS INDICATED. REFER TO THE ELECTRICAL RISER DIAGRAMS & FLOOR PLANS FOR ADDITIONAL INFORMATION/REQUIREMENTS. CONTRACTOR TO FIELD VERIFY. CLOSELY COORDINATE ALL EXISTING TO REMAIN SIGNALS WITH THE OWNER/ENGINEER AND PROVIDE CIRCUITRY (CONDUIT & CONDUCTORS) AS REQUIRED. ALL EXISTING TO REMAIN SIGNALS (I/O) AVAILABLE ARE TO BE INTEGRATED INTO THE CONTROL NETWORK AS SPECIFIED. REFER TO SPECIFICATIONS FOR ADDITIONAL INFORMATION/REQUIREMENTS. FOR BIDDING PURPOSES, CONTRACTOR TO ASSUME AN ADDITIONAL TWELVE (12) DISCRETE SIGNALS AND TWO (2) ANALOG SIGNALS ASSOCIATED WITH EXISTING I/O TO BE EXTENDED TO PROPOSED PANEL.

MHE ENGINEERING

33 Airport Center Drive, Suite 202
New Windsor, NY 12553
(845) 567-3100

111 Wheatfield Drive, Suite 1
Milford, PA 18337
(570) 296-2765

BID ADDENDUM

JADE STONE ENGINEERING

STATE OF NEW YORK · JEFFREY E. ROBINSON · 095896 · LICENSED PROFESSIONAL ENGINEER

HAZARDOUS MATERIAL NOTE:

THE SERVICES PROVIDED BY MHE, INCLUDING ALL WORK DEPICTED ON MHE PLANS, DO NOT INCLUDE SERVICES RELATED TO THE IDENTIFICATION, CONTROLS OR HANDLING OF HAZARDOUS MATERIALS, INCLUDING SUCH MATERIALS AS ASBESTOS AND LEAD PAINT. ALL TESTING, IDENTIFICATION, ABATEMENT, CONTROLS, AND HANDLING OF HAZARDOUS MATERIALS SHALL BE UNDERTAKEN BY A HAZARDOUS MATERIAL CONSULTANT AND CERTIFIED PROFESSIONALS. IF SUCH MATERIALS HAVE BEEN IDENTIFIED, CONTRACTOR WILL COMMUNICATE DIRECTLY WITH HAZARDOUS MATERIAL PROFESSIONAL FOR THE PERFORMANCE OF ANY WORK ON OR ADJACENT TO SAID MATERIALS. IF UNIDENTIFIED MATERIALS OF CONCERN ARE ENCOUNTERED WHILE UNDERTAKING THE WORK SHOWN HEREON, CONTRACTOR SHALL IMMEDIATELY NOTIFY ENGINEER AND OWNER, AND SHALL OBTAIN DIRECTION FROM THE HAZARDOUS MATERIAL CONSULTANT PRIOR TO THE CONTINUATION OF WORK INVOLVING SUSPECTED MATERIAL.

UDIG·NY SAFE DIGGING STARTS HERE
CALL 811

UNAUTHORIZED ADDITION OR ALTERATION OF THIS PLAN IS A VIOLATION OF SECTION 7209(2) OF THE NEW YORK STATE EDUCATION LAW.

ALL PRODUCTION & INTELLECTUAL PROPERTY RIGHT RESERVED ©

CAESARS LANE WWTP EXPANSION PROJECT: PHASE 2
145 CAESARS LN.
NEW WINDSOR, NY 12553

FOR TOWN OF NEW WINDSOR
555 UNION AVE.
NEW WINDSOR, NY 12553

ELECTRICAL SCHEDULES

REVISIONS

NO.	DESCRIPTION	DATE

ISSUED DATE:	06 JUNE, 2025
DESIGN BY:	RRM
DRAWN BY:	CDJ
CHECKED BY:	MGR
REVIEWED BY:	JER

SHEET NO.

E-052

PROJECT # 18-732 PHASE #

CAESARS LANE WWTP
NEW WINDSOR, NEW YORK

Demand Load Calculations

LOCATION - MAIN ELECTRICAL SERVICE

No.	Process	Item Description	Quantity	Volts	Phase	FLA	KW	PF	KVA	LOAD Diversity	Demand Load (KVA)	Load Type	LOAD (KVA) Lighting (L)	Recept. (R)	Equipment Continous (C)	Equipment Non-cont. (N)	MECHANICAL EQUIPMENT All Season (A)	MECHANICAL EQUIPMENT Cooling (AC)	MECHANICAL EQUIPMENT Heating (H)
1	CONTROL BUILDING 4500 SQFT	PROPANE WATER HEATER	1	120	1	15	1.80	1.00	1.80	1.00	1.80	N				1.80			
2	HVP2 DEMAND AMPS = 28	MISC.	1	480	3	10	8.31	1.00	8.31	1.00	8.31	N				8.31			
3		HEATING	2	480	3	4	6.65	1.00	6.65	1.00	6.65	H							6.65
4		LIGHTS	1	120	1	31	3.72	1.00	3.72	1.00	3.72	L	3.72						
5		VENTILATION	1	120	1	3.33	0.40	1.00	0.40	1.00	0.40	A					0.40		
6		RECEPTACLE	40	120	1	1.5	7.20	1.00	7.20	1.00	7.20	R		7.20					
7		FURNACE	2	120	1	12.8	3.07	1.00	3.07	1.00	3.07	H							3.07
8	HEADWORKS 2494 SQFT	MBS-01 BAR SCREEN 1/2 HP (EXISTING)	1	240	3	2.2	0.91	1.00	0.91	1.00	0.91	C			0.91				
9	HVP3 @125% = 138A	BSC-1 WASHER COMPACTOR 3/4 HP (EXISTING)	1	240	3	3.2	1.33	1.00	1.33	1.00	1.33	N				1.33			
10		MBS-02 BAR SCREEN 1 HP	1	480	3	2.1	1.75	1.00	1.75	1.00	1.75	C			1.75				
11		BSC-2 WASHER COMPACTOR 1 HP	1	480	3	2.1	1.75	1.00	1.75	1.00	1.75	N				1.75			
12		GRTPO-01, 02 GRIT PROP DRIVE 1.5 HP	2	480	3	3	4.99	1.00	4.99	1.00	4.99	C			4.99				
13		GRTP-01, 02 GRIT PUMP 7.5 HP	2	480	3	11	18.29	1.00	18.29	1.00	18.29	N				18.29			
14		GRTW-01, 02 GRIT WASHER 3 HP	2	480	3	4.8	7.98	1.00	7.98	1.00	7.98	N				7.98			
15		VENTILATION	1	120	1	6.72	0.81	1.00	0.81	1.00	0.81	A					0.81		
16		MISC.	1	480	3	10	8.31	1.00	8.31	1.00	8.31	N				8.31			
17		HEATING	1	480	3	94	78.15	1.00	78.15	1.00	78.15	H							78.15
18		LIGHTS	1	120	1	17.66	2.12	1.00	2.12	1.00	2.12	L	2.12						
19		RECEPTACLE	25	120	1	1.5	4.50	1.00	4.50	1.00	4.50	R		4.50					
20	MBR BUILDING 3744 SQFT	20-B-201-A/B/C/D/E MEMBRANE BLOWER 60 HP	5	480	3	77	320.08	1.00	320.08	0.60	192.05	C			192.05				
21	MCC1 @125% = 929A	16-B-401-A/B/C PROCESS BLOWER 150 HP	3	480	3	180	448.95	1.00	448.95	0.67	299.30	C			299.30				
22	HVP1 @125% = 318A	16-MX-211-1/2/3 AND/3C SUBMERSIBLE PUMP 8 HP	3	480	3	14	34.92	1.00	34.92	1.00	34.92	C			34.92				
23		20-P-501-A/B/C/D CENTRIFUGAL PUMP 30 HP	4	480	3	40	133.02	1.00	133.02	0.75	99.77	N				99.77			
24		90-AC-001-A/B AIR COMPRESSOR 7.5 HP	2	480	3	11	18.29	1.00	18.29	0.50	9.15	N				9.15			
25		PCD-01,02,03,04 PRIMARY DRIVE 1 HP	4	480	3	2.1	6.98	1.00	6.98	1.00	6.98	C			6.98				
26		SP-01,02,03,04 SCUM PUMPS 5 HP	4	480	3	7.6	25.27	1.00	25.27	0.75	18.96	N				18.96			
27		MISC.	1	480	3	10	8.31	1.00	8.31	1.00	8.31	N				8.31			
28		ELECTRIC WATER HEATER	1	480	3	17.44	14.50	1.00	14.50	1.00	14.50	N				14.50			
29		HEATING 208	1	208	3	100	36.03	1.00	36.03	1.00	36.03	H							36.03
30		HEATING 480	1	480	3	246.6	205.02	1.00	205.02	1.00	205.02	H							205.02
31		VENTILATION 120	1	120	1	25	3.00	1.00	3.00	1.00	3.00	A					3.00		
32		VENTILATION 208	1	208	1	75	15.60	1.00	15.60	1.00	15.60	A					15.60		
33		DEHUMIDIFIER	1	120	1	10	1.20	1.00	1.20	1.00	1.20	N				1.20			
34		90-DR-001-A/B REF AIR DRIER 1 HP	2	120	1	10	2.40	1.00	2.40	0.50	1.20	N				1.20			
35		RECEPTACLE	35	120	1	1.5	6.30	1.00	6.30	1.00	6.30	R		6.30					
36		CTP-01,02 TRANSFER PUMPS 1/2 HP	2	120	1	10	2.40	1.00	2.40	0.50	1.20	N				1.20			
37		LIGHTS	1	120	1	27	3.24	1.00	3.24	1.00	3.24	L	3.24						
38		20-P-321-1/2/3/4 TURBIDITY SAMPLING PUMPS 1/5 HP	4	120	1	4.4	2.11	1.00	2.11	0.50	1.06	N				1.06			
39		CHEMICAL METERING PUMPS	4	120	1	4.4	2.11	1.00	2.11	0.50	1.06	N				1.06			
40		P-SP-01/02 PRIMARY SLUDGE PUMP	2	480	3	4.8	7.98	1.00	7.98	0.50	3.99	N				3.99			
41		PS-AV-01/02/03/04 SLUDGE VALVES	4	120	1	4.4	2.11	1.00	2.11	0.50	1.06	N				1.06			
42		LAYDOWN PUMP	2	480	3	3.4	5.65	1.00	5.65	0.50	2.83	N				2.83			
43		DUCTLESS SPLIT SYSTEM	1	208	1	20	4.16	1.00	4.16	1.00	4.16	AC						4.16	
44	ATAD EQP BLDG 1809 SQFT	THERMAER JET 100 HP	2	480	3	124	206.18	1.00	206.18	1.00	206.18	C			206.18				
45	MCC2 @125% = 963A	SNDR JET 60 HP	1	480	3	77	64.02	1.00	64.02	1.00	64.02	C			64.02				
46		TRANSFER PUMP 10 HP	2	480	3	14	23.28	1.00	23.28	0.50	11.64	N				11.64			
47		THERMAER BLOWER 80 HP	2	480	3	52	86.46	1.00	86.46	1.00	86.46	C			86.46				
48		SNDR BLOWER 40 HP	1	480	3	52	43.23	1.00	43.23	1.00	43.23	C			43.23				
49		SPARE BLOWER 60 HP	1	480	3	77	64.02	1.00	64.02	1.00	64.02	STANDBY							
50		SLUDGE HOLDING BLOWER 60 HP	1	480	3	77	64.02	1.00	64.02	1.00	64.02	C			64.02				
51		OFF GAS FAN 30 HP	1	480	3	40	33.26	1.00	33.26	1.00	33.26	C			33.26				
52		RDT WASH WATER BOOSTER PUMP	1	480	3	3.4	2.83	1.00	2.83	1.00	2.83	N				2.83			
53		POLYMER FEED PUMP	1	120	1	9.8	2.35	2.00	1.18	1.00	1.18	N				1.18			
54		RDT-TSP-01 RDT THICKENED SLUDGE PUMP 20 HP	1	480	3	27	22.45	1.00	22.45	1.00	22.45	N				22.45			
55		RDT-FP-01 RDT SLUDGE FEED PUMP 20 HP	1	480	3	27	22.45	1.00	22.45	1.00	22.45	N				22.45			
56		POLYMER MIXER	1	120	1	9.8	1.18	1.00	1.18	1.00	1.18	N				1.18			
57		RTD-01 ROTARY DUM THICKENER 1 HP	2	480	3	2.1	3.49	1.00	3.49	1.00	3.49	N				3.49			
58		POLYMER BOOSTER PUMP	1	120	1	9.8	1.18	1.00	1.18	1.00	1.18	N				1.18			
59		COOLING WATER PUMP 30 HP	2	480	3	40	66.51	1.00	66.51	0.50	33.26	N				33.26			
60		BELT PRESS SLUDGE FEED PUMPS 15 HP	2	480	3	21	34.92	1.00	34.92	0.50	17.46	N				17.46			
61		RECEPTACLE	10	120	1	1.5	1.80	1.00	1.80	1.00	1.80	R		1.80					
62		MISC.	1	480	3	10	8.31	1.00	8.31	1.00	8.31	N				8.31			
63		LIGHTS	1	120	1	16	1.92	1.00	1.92	1.00	1.92	L	1.92						
64		VENTILATION	1	208	1	15	3.12	1.00	3.12	1.00	3.12	A					3.12		
65		ELECTRIC WATER HEATER	1	480	3	14.44	12.01	1.00	12.01	1.00	12.01	N				12.01			
66		DUCTLESS SPLIT SYSTEM	1	208	1	20	4.16	1.00	4.16	1.00	4.16	AC						4.16	
67		HEATING	1	480	3	82	68.17	1.00	68.17	1.00	68.17	H							68.17
68	GARAGE 2400 SQFT	RECEPTACLE	20	120	1	1.5	3.60	1.00	3.60	1.00	3.60	R		3.60					
69	HVP7 @125% = 75A	MISC.	1	480	3	10	8.31	1.00	8.31	1.00	8.31	N				8.31			
70		LIGHTS	1	120	1	20	2.40	1.00	2.40	1.00	2.40	L	2.40						
71		HOIST 5 HP	1	208	3	16.7	6.02	1.00	6.02	1.00	6.02	N				6.02			
72		AIR COMPRESSOR 7.5HP	1	480	3	11	9.15	1.00	9.15	1.00	9.15	N				9.15			
73		LATHE MILLING MACHINE 2 HP	1	208	1	13.2	2.75	1.00	2.75	1.00	2.75	N				2.75			
74		Welding Receptacle 208V 40A 1PH	3	208	1	32	19.97	1.00	19.97	0.33	6.66	N				6.66			
75		ELECTRIC WATER HEATER	1	120	1	11.66	1.40	1.00	1.40	1.00	1.40	N				1.40			
76		VENTILATION	1	120	1	10	1.20	1.00	1.20	1.00	1.20	A					1.20		
77		HEATING	1	480	3	37	30.76	1.00	30.76	1.00	30.76	H							30.76
78	MICROSCREEN BLDG	IP-01, 02, 03 INFLUENT PUMPS 60	3	480	3	77	192.05	1.00	192.05	0.67	128.03	C			128.03				
79	HVP6 @125% = 261A	MCR-01, 02 MICROSCREEN 3/4 HP	2	480	3	1.6	2.66	1.00	2.66	1.00	2.66	C			2.66				
80		CMP-01, 02 COMPACTOR 1.5 HP	2	480	3	3	4.99	1.00	4.99	1.00	4.99	N				4.99			
81		MISC.	1	480	3	10	8.31	1.00	8.31	1.00	8.31	N				8.31			
82		HEATING	1	480	3	54.2	45.06	1.00	45.06	1.00	45.06	H							45.06
83		RECEPTACLE	15	120	1	1.5	2.70	1.00	2.70	1.00	2.70	R		2.70					
84		LIGHTS	1	120	1	3	0.36	1.00	0.36	1.00	0.36	L	0.36						
85		VENTILATION	1	120	1	10	1.20	1.00	1.20	1.00	1.20	A					1.20		
86	CHEM FEED BLDG 630 SQFT	CHEM FEED PUMP (EXISTING)	4	120	1	4.4	2.11	1.00	2.11	0.50	1.06	N				1.06			
87	HVP8 @125% = 226A	CHEMICAL CARRIER WATER PUMP 1/2 HP (EXISTING)	3	120	1	9.8	3.53	1.00	3.53	0.66	2.33	N				2.33			
88		RECEPTACLE	25	120	1	1.5	4.50	1.00	4.50	1.00	4.50	R		4.50					
89		VENTILATION	1	120	1	10	1.20	1.00	1.20	1.00	1.20	A					1.20		
90		LIGHTS	1	120	1	5	0.60	1.00	0.60	1.00	0.60	L	0.60						
91		TANKLESS WATER HEATER	1	208	3	67	24.14	1.00	24.14	1.00	24.14	N				24.14			
92		PAB-01,02 BLOWER 20 HP	2	480	3	27	44.89	1.00	44.89	1.00	44.89	C			44.89				
93		20-P-610-A/B BACKPULSE PUMPS 58 HP	2	480	3	77	128.03	1.00	128.03	0.50	64.02	N				64.02			
94		MISC.	1	480	3	10	8.31	1.00	8.31	1.00	8.31	N				8.31			
95		HEATING	1	208	1	31	6.45	1.00	6.45	1.00	6.45	H							6.45
96		DUCTLESS SPLIT SYSTEM	1	208	1	18	3.74	1.00	3.74	1.00	3.74	AC						3.74	
97	PLANT WATER	PW-1 45 HP	2	480	3	52	86.46	1.00	86.46	0.50	43.23	N				43.23			
98	DEWATERING BLDG 3530 SQFT	BELT PRESS GRAVITY DRIVE 2 HP	2	480	3	3.4	5.65	1.00	5.65	1.00	5.65	N				5.65			
99	HVP4 @125% = 141A	BELT PRESS DRIVE 1.5 HP	4	480	3	3	9.98	1.00	9.98	1.00	9.98	N				9.98			
100		BELT PRESS FEEDBOX DRIVE	2	480	3	1.1	1.83	1.00	1.83	1.00	1.83	N				1.83			
101		POLYMER FEED SYSTEM	2	120	1	20	4.80	1.00	4.80	1.00	4.80	N				4.80			
102		BELT PRESS HYDRAULIC UNIT	2	480	3	4.8	7.98	1.00	7.98	1.00	7.98	N				7.98			
103		BELT PRESS WASH WATER 10 HP	2	480	3	14	23.28	1.00	23.28	1.00	23.28	N				23.28			
104		DISCHARGE CONVEYOR 7.5 HP	3	480	3	11	27.44	1.00	27.44	1.00	27.44	N				27.44			
105		SUMP PUMP 2 HP	2	480	3	3.4	5.65	1.00	5.65	0.50	2.83	N				2.83			
106		WINCH	2	480	3	7.6	12.64	1.00	12.64	0.50	6.32	N				6.32			
107		HOT WATER HEATER	1	120	1	20	2.40	1.00	2.40	1.00	2.40	N				2.40			
108		HEATING	1	480	3	20	16.63	1.00	16.63	1.00	16.63	H							16.63
109		VENTILATION	1	208	1	25.6	5.32	1.00	5.32	1.00	5.32	A					5.32		
110		DUCTLESS SPLIT SYSTEM	2	208	1	20	8.32	1.00	8.32	1.00	8.32	AC						8.32	
111		MISC.	1	480	3	10	8.31	1.00	8.31	1.00	8.31	N				8.31			
112		FURNACE	1	120	1	12.8	1.54	1.00	1.54	1.00	1.54	H							1.54
113		LIGHTS	1	120	1	25	3.00	1.00	3.00	1.00	3.00	L	3.00						
114		RECEPTACLE	40	120	1	1.5	7.20	1.00	7.20	1.00	7.20	R		7.20					
		SUB-TOTALS					3121.8		3120.6		2523.5		17.36	37.80	1,213.65	640.93	31.85	20.38	497.53

SERVICE ENTRANCE	
VOLTAGE	480
PHASE	3
AMPS	2451.51

TOTAL DEMAND LOAD				
Load Type	Connected kVA		Factor	Demand kVA
Lighting	17.36		1	17.36
Receptacles	10.00	27.8	0.5	23.90
Equipment: Continuous	1213.65		1	1213.65
Equipment: Non-Continuous	640.93		0.66	423.02
Mechanical: Concurrent	31.85		1	31.85
Mech: Non-Concurrent	497.53		0.66	328.37
TOTAL KVA	2,439.12			2,038.15

FEEDER DEMAND: CONSERVATIVE			
DEMAND kVA	DEMAND AMPS	%	SERVICE SIZE
2038.1	2451.5	125%	3064

	FEEDER DEMAND: NEC			
	DEMAND kVA	DEMAND AMPS	%	SERVICE SIZE
Lighting	17.4	20.9	125%	26
Receptacle	23.9	28.7	100%	29
Equipment: Continuous	1213.7	1459.8	125%	1825
Equipment: Non-Continuous	423.0	508.8	100%	509
Mech: Concurrent	31.9	38.3	100%	38
Mech: Non-Concurrent	328.4	395.0	100%	395
Largest motor	150.0	180.4	25%	45
TOTALS	2188.1	2631.9	109%	2867

1 E-053 ELECTRICAL SERVICE DEMAND/LOADING CALCULATION
SCALE: NTS
CAESAR'S LANE WWTP

MHE ENGINEERING
33 Airport Center Drive, Suite 202
New Windsor, NY 12553
(845) 567-3100
111 Wheatfield Drive, Suite 1
Milford, PA 18337
(570) 296-2765

BID ADDENDUM

JADE STONE ENGINEERING

STATE OF NEW YORK · JEFFREY E. ROBINSON · 095896 · LICENSED PROFESSIONAL ENGINEER

HAZARDOUS MATERIAL NOTE:
THE SERVICES PROVIDED BY MHE, INCLUDING ALL WORK DEPICTED ON MHE PLANS, DO NOT INCLUDE SERVICES RELATED TO THE IDENTIFICATION, CONTROLS OR HANDLING OF HAZARDOUS MATERIALS, INCLUDING SUCH MATERIALS AS ASBESTOS AND LEAD PAINT. ALL TESTING, IDENTIFICATION, ABATEMENT, CONTROLS, AND HANDLING OF HAZARDOUS MATERIALS SHALL BE UNDERTAKEN BY A HAZARDOUS MATERIAL CONSULTANT AND CERTIFIED PROFESSIONALS. IF SUCH MATERIALS HAVE BEEN IDENTIFIED, CONTRACTOR WILL COMMUNICATE DIRECTLY WITH HAZARDOUS MATERIAL PROFESSIONAL FOR THE PERFORMANCE OF ANY WORK ON OR ADJACENT TO SAID MATERIALS. IF UNIDENTIFIED MATERIALS OF CONCERN ARE ENCOUNTERED WHILE UNDERTAKING THE WORK SHOWN HEREON, CONTRACTOR SHALL IMMEDIATELY NOTIFY ENGINEER AND OWNER, AND SHALL OBTAIN DIRECTION FROM THE HAZARDOUS MATERIAL CONSULTANT PRIOR TO THE CONTINUATION OF WORK INVOLVING SUSPECTED MATERIAL.

UDIG·NY SAFE DIGGING STARTS HERE
CALL 811

UNAUTHORIZED ADDITION OR ALTERATION OF THIS PLAN IS A VIOLATION OF SECTION 7209(2) OF THE NEW YORK STATE EDUCATION LAW.

ALL PRODUCTION & INTELLECTUAL PROPERTY RIGHT RESERVED ©

CAESARS LANE WWTP EXPANSION PROJECT: PHASE 2
145 CAESARS LN.
NEW WINDSOR, NY 12553
FOR TOWN OF NEW WINDSOR
555 UNION AVE.
NEW WINDSOR, NY 12553

ELECTRICAL SCHEDULES

REVISIONS

NO.	DESCRIPTION	DATE

ISSUED DATE:	06 JUNE, 2025
DESIGN BY:	RRM
DRAWN BY:	CDJ
CHECKED BY:	MGR
REVIEWED BY:	JER
SHEET NO.	E-053

PROJECT # 18-732 PHASE #

GENERAL SHEET NOTES:

1. REFER TO E-001 FOR ELECTRICAL LEGENDS, ABBREVIATIONS, AND GENERAL PROJECT NOTES.
2. ITEMS INDICATED TO BE REMOVED:
   2.1. REMOVE ALL CONDUCTORS AND EXPOSED CONDUIT BACK TO SOURCE (UOI).
   2.2. REMOVE CIRCUIT WIRING AND CIRCUIT BREAKER FROM SOURCE PANEL (UOI).
   2.3. REMOVE ALL ASSOCIATED CONTROL CONDUCTORS, CONDUITS, AND DEVICES (UOI).
   2.4. REMOVE ASSOCIATED STARTERS, DISCONNECTS, CONTROL STATIONS, AND ALL ASSOCIATED CIRCUITRY (UOI).
   2.5. REMOVE EQUIPMENT PADS & MOUNTING HARDWARE, BRACKETS, ACCESSORIES, ETC... (UOI).
   2.6. REVISE PANELBOARD DIRECTORIES/NAME PLATES AS CHANGES OCCUR (UOI).
3. THESE DEMOLITION DRAWINGS ARE SCHEMATIC IN NATURE AND ARE BASED ON CURSORY FIELD OBSERVATION AND EXISTING DRAWINGS. IT IS NOT THE INTENTION OF THESE DRAWINGS TO INDICATE EVERY DEVICE/FIXTURE REQUIRING REMOVAL/DEMO RATHER GENERAL SYSTEMS WHICH ARE TO BE REMOVED. COORDINATE REMOVAL EFFORTS CLOSELY WITH OWNER, ENGINEER, AND APPLICABLE TRADE CONTRACTOR.
4. CIRCUITS NOT IN AREA OF WORK THAT ARE AFFECTED BY WORK SHALL BE OPERATIONAL DURING PROJECT. PROVIDE TEMPORARY CIRCUITS AS NECESSARY.
5. CIRCUIT, EQUIPMENT, AND DEVICE REMOVAL SHALL NOT AFFECT THE INTEGRITY OR FUNCTIONALITY OF CIRCUITS TO REMAIN. ALL CIRCUITS TO REMAIN SHALL BE MAINTAINED. PROVIDE ALL NECESSARY CIRCUIT MODIFICATIONS AND EXTENSIONS.
6. WHERE REMOVALS LEAVE HOLES AND DAMAGED SURFACES EXPOSED IN THE FINISHED WORK, PATCH AND REPAIR THESE HOLES AND DAMAGED SURFACES TO MATCH ADJACENT FINISHED SURFACES. WHERE NEW WORK IS TO BE APPLIED TO EXISTING SURFACES, PERFORM REMOVALS, AND PATCHING IN A MANNER TO PRODUCE SURFACES SUITABLE FOR RECEIVING NEW WORK. COORDINATE ALL WORK WITH OWNER, ENGINEER, AND APPLICABLE TRADE CONTRACTOR.
7. CONTRACTOR TO COORDINATE SEQUENCE OF REMOVALS WITH THE OWNER, ENGINEER, AND APPLICABLE TRADE CONTRACTOR. NOTE, WWTP MUST REMAIN OPERATIONAL AT ALL TIMES. REFER TO SPECIFICATIONS AND DEMOLITION SINGLE LINE DIAGRAMS FOR ADDITIONAL INFORMATION.
8. NOT ALL EQUIPMENT/DEVICES WITHIN THE WWTP ARE SHOWN FOR CLARITY. CONTRACTOR SHALL FIELD VERIFY ALL EXISTING CONDITIONS AND REPORT DISCREPANCIES TO ENGINEER PRIOR TO COMMENCEMENT OF DEMOLITION.
9. WHERE REMOVAL OF CONDUIT SYSTEM IS NOT FEASIBLE CONTRACTOR TO REMOVE ALL CONDUCTORS FROM CONDUIT SYSTEM, CUT FLUSH, CAP CONDUIT SYSTEM, AND ABANDON IN PLACE. CONTRACTOR TO FIELD VERIFY AND COORDINATE FINAL REQUIREMENTS WITH THE OWNER AND ENGINEER, TYPICAL.
10. NOT ALL EXISTING UNDERGROUND UTILITIES SHOWN FOR CLARITY. REFER TO CIVIL SITE PLANS AND GENERAL NOTES ON SHEET E-001 FOR ADDITIONAL SITE INFORMATION. CONTRACTOR TO FIELD VERIFY AS REQUIRED.
11. NOT ALL EXISTING UNDERGROUND/SUB-SURFACE ELECTRICAL DUCT BANKS, FEEDERS, AND BRANCH CIRCUITS SHOWN FOR CLARITY. REFER TO ELECTRICAL SINGLE LINE DIAGRAM DEMOLITION SHEETS FOR REMOVAL INFORMATION.
12. ALL UTILITY CHARGES RESULTING FROM THE REMOVAL OF THE EXISTING ELECTRICAL SERVICE SHALL BE BILLED DIRECTLY TO THE OWNER FROM THE UTILITY COMPANY.

GENERAL DEMOLITION NOTES:

MECHANICAL EQUIPMENT & MISC. ELECTRICAL EQUIPMENT:
WHERE INDICATED TO BE DEMOLISHED:
- REFER TO ALL TRADE CONTRACT DRAWINGS FOR AN ACCURATE DEPICTION OF ALL DEMOLITION REQUIRED AS PART OF THIS CONTRACT.
- REMOVE ALL WIRE (POWER & CONTROLS) & EXPOSED CONDUIT BACK TO SOURCE PANEL, UNLESS OTHERWISE INDICATED, UOI.
- REMOVE ANY ASSOCIATED MOTOR STARTERS, CONTROL STATIONS, &/OR DISCONNECTS, UOI.
- REMOVE CIRCUIT WIRING FROM SOURCE PANEL AND REMOVE ASSOCIATED SOURCE CIRCUIT BREAKER, UOI.
- REMOVE ALL INTERLOCK CIRCUITRY, UOI.
- PROVIDE REVISED TYPED PANELBOARD DIRECTORIES FOR ALL EXISTING TO REMAIN PANELS WHERE CIRCUITS ARE TO BE REMOVED.
- REMOVE ALL ASSOCIATED MOUNTING HARDWARE, BRACKETS, PADS, AND EQUIPMENT, UOI.

RECEPTACLES:
WHERE INDICATED TO BE DEMOLISHED:
- REMOVE ALL RECEPTACLES IMPACTED BY WALL MODIFICATIONS AND OVERALL PROJECT IMPROVEMENTS. **NOTE** ALL EXISTING RECEPTACLES MAY NOT BE SHOWN ON THESE DEMOLITION PLANS. MINOR FIELD VERIFICATION REQUIRED.
- REMOVE DEVICE, AND ALL ASSOCIATED WIRE & CONDUIT BACK TO SOURCE OR NEAREST ACTIVE JUNCTION BOX, UOI.

LIGHTING:
WHERE INDICATED TO BE DEMOLISHED:
- REMOVE ALL FIXTURES THROUGHOUT SPACE. **NOTE** ALL EXISTING LIGHTING FIXTURES MAY NOT BE SHOWN ON THESE DEMOLITION PLANS. MINOR FIELD VERIFICATION REQUIRED.
- REMOVE ALL ASSOCIATED WIRING BACK TO SOURCE, UOI.
- REMOVE SWITCHING AND CONTROL DEVICES, UOI.
- REMOVE CONTACTORS ASSOCIATED WITH LOW VOLTAGE SWITCHING DEVICES, UOI.
- DISPOSE OF ALL LAMPS IN ACCORDANCE WITH STATE/FEDERAL AND EPA REQUIREMENTS.

PANELBOARD REMOVAL AND REPLACEMENT:
- REFER TO SINGLE LINE DIAGRAMS FOR SCOPE OF WORK.

CIRCUIT AND FEEDER REMOVAL AND REPLACEMENT:
- MAINTAIN ANY EXISTING NON-IMPACTED PANELBOARDS AND ANY NON-IMPACTED CIRCUITS WHICH ARE EXISTING TO REMAIN.
- WHERE CIRCUITS ARE AFFECTED BY MODIFICATION/REMOVAL ACTIVITIES, PROVIDE NECESSARY CIRCUIT EXTENSIONS AND ALL NECESSARY LABOR/MATERIALS AS NECESSARY TO REPAIR AND RE-CONNECT CIRCUIT(S).
- ANY CIRCUITS/FEEDERS WHICH REQUIRE SHUTDOWN TO ACCOMMODATE WORK SHALL BE COORDINATED WITH THE OWNER WELL IN ADVANCE.

BUILDING/STRUCTURE GROUND SYSTEM:
- CONTRACTOR TO CAREFULLY PROTECT AND MAINTAIN ALL GROUND SYSTEMS ASSOCIATED WITH BUILDINGS/STRUCTURES EXISTING TO REMAIN.
- CONTRACTOR TO REMOVE ALL GROUND SYSTEMS ASSOCIATED WITH BUILDING/STRUCTURES TO BE REMOVED.
- GROUND SYSTEM COMPONENTS MAY INCLUDE, BUT ARE NOT LIMITED TO, GROUNDING CONDUCTORS, JUMPERS, TERMINATIONS, RODS, AND AIR TERMINALS. CONTRACTOR TO FIELD VERIFY EXISTING CONDITIONS PRIOR TO COMMENCEMENT OF DEMOLITION.

HAZARDOUS MATERIAL REMOVAL:
PERFORM WORK FOR REMOVAL AND DISPOSAL OF EQUIPMENT AND MATERIALS CONTAINING TOXIC SUBSTANCES REGULATED UNDER THE FEDERAL TOXIC SUBSTANCES CONTROL ACT (TSCA) IN ACCORDANCE WITH APPLICABLE FEDERAL, STATE, AND LOCAL REGULATIONS. APPLICABLE EQUIPMENT AND MATERIALS INCLUDE, BUT ARE NOT LIMITED TO:
- PCB-CONTAINING ELECTRICAL EQUIPMENT, INCLUDING TRANSFORMERS, CAPACITORS, AND SWITCHES.
- PCB- AND DEHP-CONTAINING LIGHTING BALLASTS.
- MERCURY-CONTAINING LAMPS AND TUBES, INCLUDING FLUORESCENT LAMPS, HIGH INTENSITY DISCHARGE (HID), ARC LAMPS, ULTRA-VIOLET, HIGH PRESSURE SODIUM, MERCURY VAPOR, IGNITRON TUBES, NEON, AND INCANDESCENT.
- CONTRACTOR TO COORDINATE ANY REQUIRED HAZARDOUS MATERIAL REMOVAL WITH THE OWNER, ENGINEER, AND APPLICABLE TRADE CONTRACTOR.

SHEET KEY NOTES:

1. DUCT BANK (DB-06) AND HANDHOLES (HH-1E AND HH-1C) ARE APART OF PHASE 1 CONSTRUCTION. CONTRACTOR TO REMOVE ALL WIRES, CLEAN CONDUITS, CAP, LABEL, AND LEAVE FOR REUSE AS SHOWN ON NEW WORK PLANS.

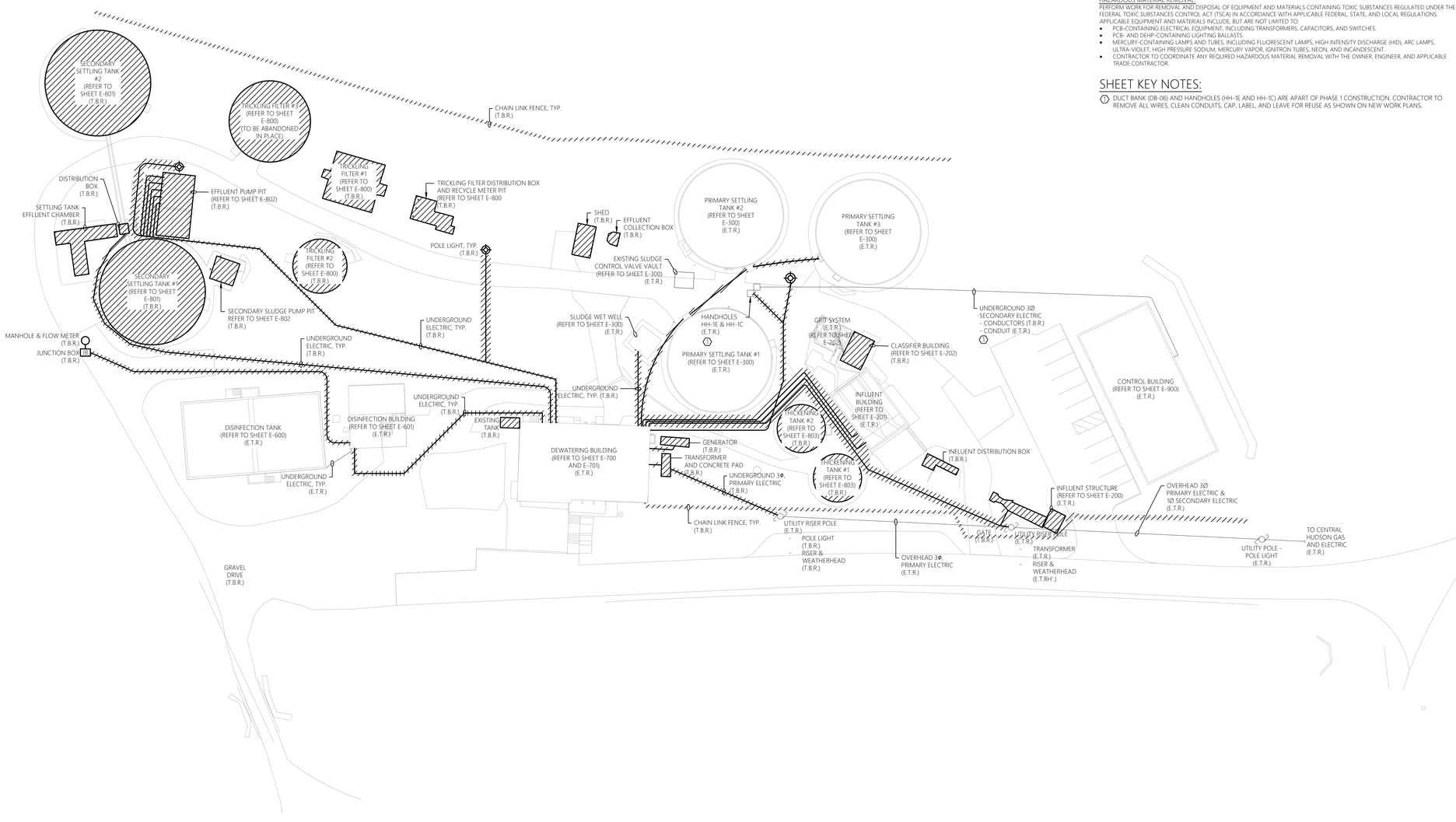

0' 10' 20' 40'
SCALE: 1" = 20'

1 / E-100 ELECTRICAL SITE PLAN - DEMOLITION
SCALE: 1" = 20'-0"
CAESARS LANE WASTEWATER TREATMENT PLANT

MHE ENGINEERING
33 Airport Center Drive, Suite 202
New Windsor, NY 12553
(845) 587-3100
111 Wheatfield Drive, Suite 1
Milford, PA 18337
(570) 296-2765

BID ADDENDUM

JADE STONE ENGINEERING

STATE OF NEW YORK · JEFFREY E. ROBINSON · 095896 · LICENSED PROFESSIONAL ENGINEER

HAZARDOUS MATERIAL NOTE:

THE SERVICES PROVIDED BY MHE, INCLUDING ALL WORK DEPICTED ON MHE PLANS, DO NOT INCLUDE SERVICES RELATED TO THE IDENTIFICATION, CONTROLS OR HANDLING OF HAZARDOUS MATERIALS, INCLUDING SUCH MATERIALS AS ASBESTOS AND LEAD PAINT. ALL TESTING, IDENTIFICATION, ABATEMENT, CONTROLS, AND HANDLING OF HAZARDOUS MATERIALS SHALL BE UNDERTAKEN BY A HAZARDOUS MATERIAL CONSULTANT AND CERTIFIED PROFESSIONALS. IF SUCH MATERIALS HAVE BEEN IDENTIFIED, CONTRACTOR WILL COMMUNICATE DIRECTLY WITH HAZARDOUS MATERIAL PROFESSIONAL FOR THE PERFORMANCE OF ANY WORK ON OR ADJACENT TO SAID MATERIALS. IF UNIDENTIFIED MATERIALS OF CONCERN ARE ENCOUNTERED WHILE UNDERTAKING THE WORK SHOWN HEREON, CONTRACTOR SHALL IMMEDIATELY NOTIFY ENGINEER AND OWNER, AND SHALL OBTAIN DIRECTION FROM THE HAZARDOUS MATERIAL CONSULTANT PRIOR TO THE CONTINUATION OF WORK INVOLVING SUSPECTED MATERIAL.

UDIG·NY SAFE DIGGING STARTS HERE
CALL 811

UNAUTHORIZED ADDITION OR ALTERATION OF THIS PLAN IS A VIOLATION OF SECTION 7209(2) OF THE NEW YORK STATE EDUCATION LAW.

ALL PRODUCTION & INTELLECTUAL PROPERTY RIGHT RESERVED ©

CAESARS LANE WWTP EXPANSION PROJECT: PHASE 2
145 CAESARS LN.
NEW WINDSOR, NY 12553
FOR TOWN OF NEW WINDSOR
555 UNION AVE.
NEW WINDSOR, NY 12553

ELECTRICAL SITE PLAN - DEMOLITION

REVISIONS

NO.	DESCRIPTION	DATE

ISSUED DATE:	06 JUNE, 2025
DESIGN BY:	RRM
DRAWN BY:	CDJ
CHECKED BY:	MGR
REVIEWED BY:	JER

SHEET NO.
E-100

PROJECT # 18-732 PHASE #

GENERAL NEW WORK NOTES:

1. REFER TO E-001 FOR ELECTRICAL LEGENDS, ABBREVIATIONS AND GENERAL PROJECT NOTES.
2. PROPOSED UG DUCT BANKS AND STRUCTURES SHOWN ARE APPROXIMATE IN LOCATION. ROUTE UG DUCT BANKS WITH GENERAL ROUTING AS SHOWN ON PLANS. ROUTE DUCT BANKS AS NECESSARY TO AVOID CONFLICTS WITH SITE CONDITIONS AND PROPOSED PIPING SYSTEMS.
3. DUCT BANKS SHALL NOT BE LOCATED ABOVE OTHER PIPING SYSTEMS EXCEPT WHERE CROSSING. MAINTAIN NESC SEPARATION BETWEEN UTILITIES.
4. REFER TO UNDERGROUND UTILITIES (GENERAL NOTES) ON SHEET E-001 FOR ADDITIONAL INFORMATION.
5. COORDINATE FINAL DUCT BANK LOCATIONS (PRIOR TO ROUGH-IN) WITH APPLICABLE CONTRACTOR AND THE OWNER TO AVOID CONFLICT WITH PROPOSED WORK AND EXISTING CONDITIONS.
6. REFER TO DUCT BANK SCHEDULE FOR ADDITIONAL INFORMATION REGARDING DUCT BANK ROUTING, PURPOSE, AND CONTENTS.
7. PROVIDE A DEDICATED GROUNDING CONDUCTOR FOR ALL ELECTRICAL EQUIPMENT AND ASSOCIATED EQUIPMENT/DEVICES.
8. EQUIPMENT AND DEVICE LOCATIONS ARE SHOWN AS GENERAL IN NATURE. REFER TO GENERAL SHEETS AND COORDINATE WITH APPLICABLE CONTRACTOR FOR EXACT LOCATIONS.
9. CONTRACTOR TO COORDINATE ALL ASPECTS OF SEQUENCE OF CONSTRUCTION WITH THE OWNER AND APPLICABLE CONTRACTOR.
10. REFER TO ELECTRICAL SINGLE LINE DIAGRAMS, FLOOR PLANS, RISER DIAGRAMS, SCHEDULES, DETAILS, & SPECIFICATIONS FOR ADDITIONAL INFORMATION/REQUIREMENTS.
11. REFER TO OVERALL SITE PLANS ON CIVIL/GENERAL SHEETS FOR ADDITIONAL SITE INFORMATION.
12. NOT ALL EXISTING/PROPOSED SITE UTILITIES SHOWN FOR CLARITY. REFER TO GENERAL/CIVIL SHEETS FOR ADDITIONAL SITE INFORMATION.
13. CONTRACTOR IS RESPONSIBLE FOR ALL SITE RESTORATION. REFER TO TYPICAL DUCT BANK SECTION DETAILS FOR ADDITIONAL INFORMATION/REQUIREMENTS.
14. CONTRACTOR TO COORDINATE PARKING & LAYDOWN AREA WITH THE OWNER AND APPLICABLE CONTRACTOR.
15. CONTRACTOR TO ADJUST FINAL AIMING ANGLE OF EXTERIOR LIGHT FIXTURES TO LIGHT DESIRED AREAS AND MINIMIZE LIGHT POLLUTION. COORDINATE WITH THE OWNER AND APPLICABLE CONTRACTOR. REFER TO THE LUMINAIRE SCHEDULE FOR ADDITIONAL INFORMATION/REQUIREMENTS.
16. NOT ALL HAND-HOLES AND PULL POINTS SHOWN FOR CLARITY. CONTRACTOR TO PROVIDE HAND-HOLES AND PULL POINTS AS REQUIRED AND PER NEC. CONTRACTOR TO FIELD VERIFY. REFER TO TYPICAL HANDHOLE DETAIL FOR ADDITIONAL INFORMATION/REQUIREMENTS.
17. ALL UTILITY CHARGES RESULTING FROM THE PROPOSED SERVICE ENTRANCE DESIGN SHALL BE BILLED DIRECTLY TO THE OWNER FROM THE UTILITY COMPANY.

SHEET KEY NOTES:

1. PROPOSED PAD-MOUNTED TRANSFORMER BY THIS CONTRACT. THIS CONTRACT RESPONSIBLE FOR THE TRANSFORMER, CONCRETE PAD, CONCRETE VAULT, AND GROUNDING AS SHOWN. REFER TO 'TYPICAL UTILITY TRANSFORMER PAD AND VAULT DETAIL' FOR ADDITIONAL INFORMATION. TRANSFORMER TO BE KEPT A MINIMUM OF 10'-0" FROM ALL STRUCTURES, ACCESS DRIVES, BUILDINGS, UNDERGROUND UTILITIES, AND ALL OTHER ABOVE GRADE EQUIPMENT. IN ADDITION, TRANSFORMER TO BE KEPT A MINIMUM OF 25'-0" FROM ABOVE GRADE EXPOSED GAS LINES, GAS METERS, WATER LINES, AND SEWER LINES. FINAL LOCATION TO BE COORDINATED IN THE FIELD WITH THE UTILITY, OWNER, ENGINEER AND APPLICABLE CONTRACTOR TO AVOID CONFLICT WITH EXISTING SITE CONDITIONS AND PROPOSED WORK, AS WELL AS COMPLY WITH ALL UTILITY REQUIREMENTS. REFER TO THE ELECTRICAL SINGLE LINE DIAGRAM & SPECIFICATIONS FOR ADDITIONAL INFORMATION/REQUIREMENTS.
2. PROPOSED EMERGENCY GENERATOR, ENCLOSURE AND CONCRETE EQUIPMENT PAD. TYPICAL OF TWO (2). GENERATORS TO BE KEPT A MINIMUM OF 10'-0" FROM ALL STRUCTURES, ACCESS DRIVES, BUILDINGS, AND EQUIPMENT. FINAL LOCATION TO BE ADJUSTED TO AVOID CONFLICT AND COMPLY WITH NEC ARTICLE 110.26 'SPACE ABOUT ELECTRICAL EQUIPMENT'. COORDINATE FINAL LOCATION AND ORIENTATION IN THE FIELD WITH THE OWNER, ENGINEER, AND APPLICABLE CONTRACTOR. REFER TO THE ELECTRICAL SINGLE LINE DIAGRAM, SPECIFICATIONS AND 'TYPICAL GENERATOR PAD DETAIL' FOR ADDITIONAL INFORMATION/REQUIREMENTS.
3. EQUIPMENT GROUND RING. GROUND RING TO BE BURIED AT MINIMUM 3 FEET BELOW FINISHED GRADE. GROUND RING TO BE KEPT AT MINIMUM OF 3 FEET AWAY FROM EQUIPMENT (GENERATORS & TRANSFORMER) AT ALL TIMES. PROVIDE AND INSTALL 3/4" Ø X 10' GROUND RODS AT EACH CORNER OF GROUND RING FOR A TOTAL OF FOUR (4) GROUND RODS. BOND ALL PROPOSED EQUIPMENT (GENERATORS & TRANSFORMER) TO GROUND RING. ALL GROUND CONDUCTORS SHALL BE #4/0 COPPER, U.O.N.
4. 3/4"Ø x 10'-0" COPPER GROUND ROD. TYPICAL OF 4, ONE AT EACH CORNER OF THE GROUND RING.
5. PROTECTIVE BOLLARD; TYPICAL OF TWENTY (20). DISTANCE FROM BOLLARD TO EQUIPMENT PAD (GENERATOR AND TRANSFORMER) TO BE 5'-0" MINIMUM TO COMPLY WITH NEC REQUIRED WORKING CLEARANCES AND ALLOW FOR ROUTINE MAINTENANCE. BOLLARDS TO BE SPACED 5'-0" APART ON CENTER. REFER TO TYPICAL BOLLARD DETAIL FOR ADDITIONAL INFORMATION/REQUIREMENTS. COORDINATE FINAL QUANTITIES / LOCATIONS IN THE FIELD WITH THE OWNER, UTILITY, ENGINEER, AND APPLICABLE CONTRACTOR PRIOR TO ROUGH-IN.
6. PROVIDE AND INSTALL TWO (2) 3/4"Ø x 10'-0" COPPER GROUND RODS. BOND ALL EQUIPMENT ON PRIMARY METERING RISER POLE AS SHOWN ON POLE DETAILS ON SHEET E-035 OR AS REQUIRED BY THE UTILITY. GROUND ROD TO BE BURIED AT MINIMUM 3 FEET BELOW FINISHED GRADE. GROUND RING TO BE KEPT AT MINIMUM OF 3 FEET AWAY FROM POLES AT ALL TIMES. ALL GROUND CONDUCTORS SHALL BE #1/0 COPPER, U.O.N.
7. CONTRACTOR TO COORDINATE FINAL LOCATION WITH OWNER, ENGINEER, AND APPLICABLE CONTRACTOR TO AVOID POTENTIAL CONFLICTS WITH EXISTING AND PROPOSED CONDITIONS. ADJUST FIXTURE TO LIGHT DESIRED AREAS AND MINIMIZE LIGHT POLLUTION. REFER TO ELECTRICAL DETAILS AND SCHEDULES FOR ADDITIONAL INSTALLATION, CONTROL, AND WIRING INFORMATION/REQUIREMENTS.
8. CONTRACTOR TO COMPLY WITH THE HIGH VOLTAGE PROXIMITY ACT AND ALL NESC REQUIREMENTS WHEN ERECTING STRUCTURES NEAR ENERGIZED UTILITY LINES. ALL EQUIPMENT, CRANES, ETC. TO BE KEPT A MINIMUM OF 10'-0" FROM ENERGIZED UTILITY LINES. COORDINATE WITH UTILITY PRIOR TO COMMENCING WORK. TYPICAL.
9. AREA IS TO BE RE-GRADED BY APPLICABLE CONTRACTOR PRIOR TO EQUIPMENT INSTALLATION. COORDINATE FINAL REQUIREMENTS CLOSELY WITH APPLICABLE CONTRACTOR, OWNER, AND ENGINEER PRIOR TO EQUIPMENT INSTALLATION TO AVOID CONFLICTS WITH EXISTING AND PROPOSED CONDITIONS. REFER TO CIVIL SITE PLANS FOR ADDITIONAL INFORMATION/REQUIREMENTS.
10. COORDINATE PROPOSED CONDUIT STUB UPS AND THROUGH SLAB CONDUIT PENETRATIONS CLOSELY WITH THE OWNER, ENGINEER, AND APPLICABLE CONTRACTOR. CONTRACTOR TO ROUTE ALL PROPOSED CONDUITS ENTERING/LEAVING THE PROPOSED BUILDING FROM BENEATH GRADE. COORDINATE ALL REQUIRED CONDUIT SLEEVES AND PENETRATIONS CLOSELY WITH THE OWNER, ENGINEER, AND APPLICABLE CONTRACTOR. AVOID VISIBLE EXTERIOR WALL PENETRATIONS TO GREATEST EXTENT POSSIBLE.
11. CONTRACTOR RESPONSIBLE TO RESTORE ALL DISTURBED SURFACES AS PART OF THIS PROJECT. COORDINATE FINAL REQUIREMENTS WITH THE OWNER AND APPLICABLE CONTRACTOR. REFER TO DUCT BANK SECTION DETAILS FOR ADDITIONAL INFORMATION. TYPICAL OF ALL PROPOSED DUCT BANKS.
12. CONTRACTOR TO COORDINATE FINAL DUCT BANK ROUTING/REQUIREMENTS WITH EXISTING FIELD CONDITIONS, PROPOSED WORK, OWNER AND APPLICABLE CONTRACTOR PRIOR TO ROUGH-IN TO AVOID CONFLICTS. TYPICAL OF ALL PROPOSED DUCT BANKS.
13. FINAL CONDUIT PENETRATION LOCATION TO BE CLOSELY COORDINATED WITH THE OWNER, ENGINEER, AND APPLICABLE CONTRACTOR. FOR BIDDING PURPOSES, ASSUME CONDUIT PENETRATIONS WILL TAKE PLACE BELOW GRADE. CONTRACTOR TO FIELD VERIFY. REFER TO ELECTRICAL DETAILS FOR ADDITIONAL INFORMATION/REQUIREMENTS.
14. FINAL CONDUIT PENETRATION LOCATION TO BE CLOSELY COORDINATED WITH THE OWNER, ENGINEER, AND APPLICABLE CONTRACTOR. FOR BIDDING PURPOSES ASSUME CONDUIT PENETRATIONS WILL TAKE PLACE ABOVE GRADE AND THEN ELBOW INTO BUILDING/STRUCTURE. PROVIDE STAINLESS STEEL UNISTRUT AND HARDWARE TO SUPPORT PROPOSED CONDUITS ALONG EXTERIOR WALL. CONTRACTOR TO FIELD VERIFY. REFER TO ELECTRICAL DETAILS FOR ADDITIONAL INFORMATION/REQUIREMENTS.
15. REFER TO ELECTRICAL SINGLE LINE DIAGRAMS, RISER DIAGRAMS, SPECIFICATIONS, AND DETAILS FOR ADDITIONAL INFORMATION/REQUIREMENTS. PROVIDE AS SPLIT HANDHOLE FOR BOTH POWER AND CONTROL.
16. ALL CONDUITS TO BE ROUTED ALONG TANK EXTERIOR WALL AND SUPPORTED INTERNALLY BY THE WALKWAY AND ALUMINUM HANDRAIL SYSTEM. ROUTING AND ATTACHMENT METHODS OF ALL CONDUITS WITHIN TANK ARE TO BE CLOSELY COORDINATED WITH THE OWNER, ENGINEER, AND APPLICABLE CONTRACTOR TO AVOID CONFLICTS. ALL RACEWAY TO BE PVC COATED RGS BY PLASTI-BOND, OR APPROVED EQUAL. ALL MOUNTING HARDWARE, BRACKETS, SUPPORTS, CHANNELS, FITTINGS, CLAMPS, ETC... TO BE A CORROSION RESISTANT PRODUCT LINE AS MANUFACTURED BY POWER-STRUT DEFENDER, OR APPROVED EQUAL. SUBMIT PRODUCT DATA TO ENGINEER DURING SUBMITTAL PHASE FOR APPROVAL. REFER TO RACEWAY SCHEDULE & CONDUIT MOUNTING DETAIL FOR ADDITIONAL INFORMATION/REQUIREMENTS.
17. BURIAL DEPTH OF 15KV CABLE SYSTEM TO BE MINIMUM 30" TO COMPLY WITH NESC REQUIREMENTS. REFER TO DUCT BANK SECTION DETAILS FOR ADDITIONAL INFORMATION.
18. REFER TO ELECTRICAL SINGLE LINE DIAGRAM, SCHEDULES, DETAILS, & SPECIFICATIONS FOR ADDITIONAL INFORMATION/REQUIREMENTS. CONTRACTOR TO COORDINATE ALL WORK AND REQUIREMENTS ASSOCIATED WITH THE PROPOSED ELECTRICAL SERVICE WITH THE UTILITY COMPANY INCLUDING BUT NOT LIMITED TO THE FOLLOWING: PRIMARY METERING RISER POLE, OVERHEAD 3Ø PRIMARY ELECTRIC, METERING, EQUIPMENT LOCATIONS, AND POINT OF SUPPLY. REFER TO SHEET E001 FOR UTILITY CONTACT INFORMATION AND ASSOCIATED WORK ORDER. CONTRACTOR TO REFERENCE WORK ORDER NUMBER WHEN CONTACTING CENTRAL HUDSON.
19. CONTRACTOR RESPONSIBLE FOR ALL BRUSH AND TREE CLEARING AS REQUIRED TO ACCOMMODATE INSTALLATION OF POLES AND OVERHEAD ELECTRIC AS SHOWN. COORDINATE CLOSELY WITH OWNER, ENGINEER, AND UTILITY.
20. CONTRACTOR RESPONSIBLE FOR COORDINATING ALL REQUIRED ELECTRICAL INSPECTIONS WITH CENTRAL HUDSON INCLUDING ALL GROUNDING (CONDUCTORS, CONNECTORS, RODS, ETC...) PRIOR TO BACKFILLING AND CONCEALING WORK. COORDINATE CLOSELY WITH CENTRAL HUDSON. REFER TO SHEET E001 FOR UTILITY CONTACT INFORMATION AND ASSOCIATED WORK ORDER. CONTRACTOR TO REFERENCE WORK ORDER NUMBER WHEN CONTACTING CENTRAL HUDSON.
21. DUCT BANK (DB-06) AND HANDHOLES (HH-1E AND HH-1C) ARE APART OF PHASE 1 CONSTRUCTION. CONTRACTOR TO REUSE HANDHOLES AND CONDUITS IN DUCT BANK FOR WIRING SHOWN ON SINGLE LINE DIAGRAMS, RISER DIAGRAMS, SCHEDULES, AND DETAILS.

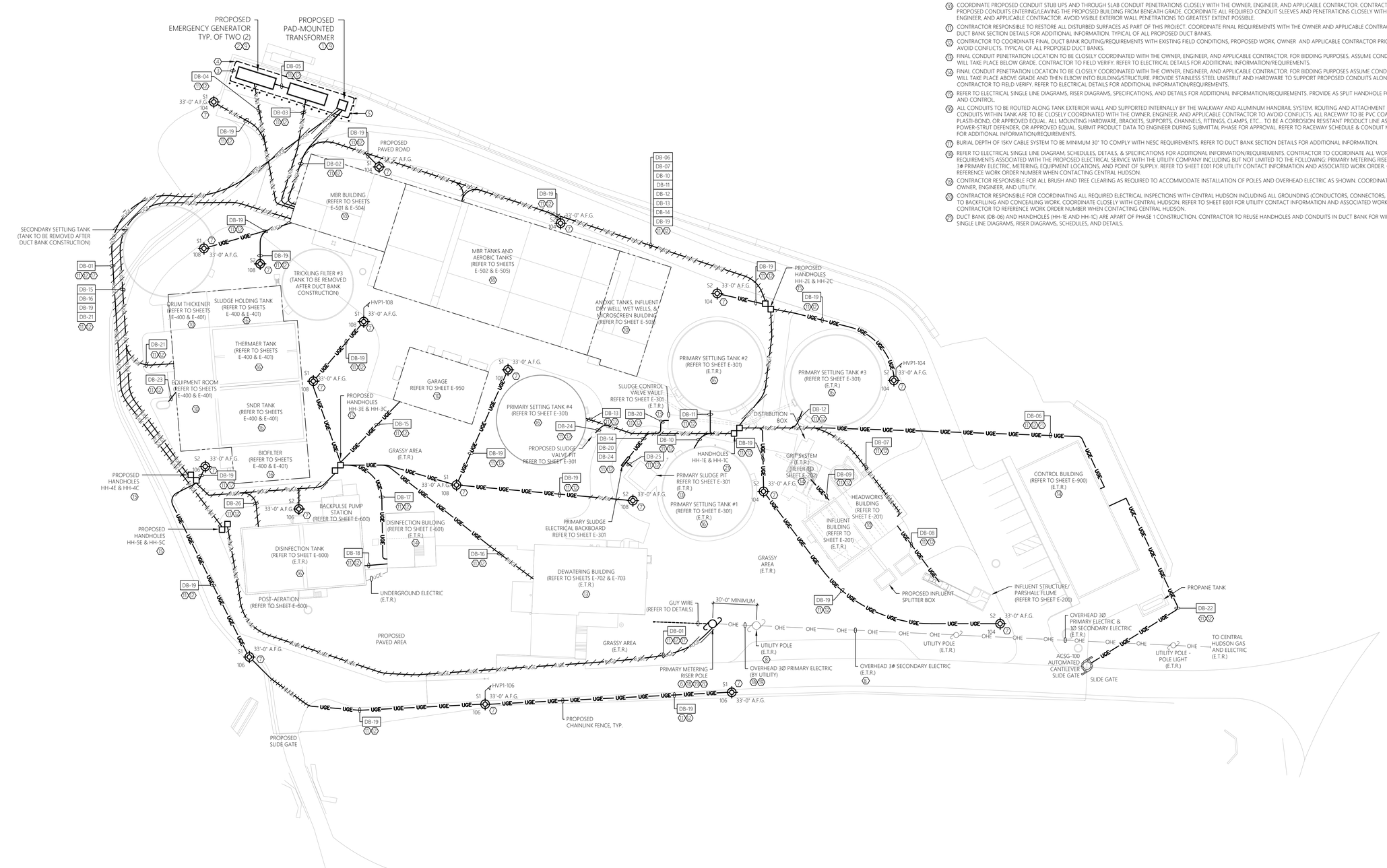

0' 30' 60'
SCALE: 1" = 30'-0"

1 E-101 ELECTRICAL SITE PLAN - NEW WORK
SCALE: 1" = 30'-0" CAESARS LANE WASTEWATER TREATMENT PLANT

MHE ENGINEERING
33 Airport Center Drive, Suite 202
New Windsor, NY 12553
(845) 587-3100
111 Wheatfield Drive, Suite 1
Milford, PA 18337
(570) 296-2765

BID ADDENDUM

JADE STONE ENGINEERING

STATE OF NEW YORK · JEFFREY E. ROBINSON · 095896 · LICENSED PROFESSIONAL ENGINEER

HAZARDOUS MATERIAL NOTE:

THE SERVICES PROVIDED BY MHE, INCLUDING ALL WORK DEPICTED ON MHE PLANS, DO NOT INCLUDE SERVICES RELATED TO THE IDENTIFICATION, CONTROLS OR HANDLING OF HAZARDOUS MATERIALS, INCLUDING SUCH MATERIALS AS ASBESTOS AND LEAD PAINT. ALL TESTING, IDENTIFICATION, ABATEMENT, CONTROLS, AND HANDLING OF HAZARDOUS MATERIALS SHALL BE UNDERTAKEN BY A HAZARDOUS MATERIAL CONSULTANT AND CERTIFIED PROFESSIONALS. IF SUCH MATERIALS HAVE BEEN IDENTIFIED, CONTRACTOR WILL COMMUNICATE DIRECTLY WITH HAZARDOUS MATERIAL PROFESSIONAL FOR THE PERFORMANCE OF ANY WORK ON OR ADJACENT TO SAID MATERIALS. IF UNIDENTIFIED MATERIALS OF CONCERN ARE ENCOUNTERED WHILE UNDERTAKING THE WORK SHOWN HEREON, CONTRACTOR SHALL IMMEDIATELY NOTIFY ENGINEER AND OWNER, AND SHALL OBTAIN DIRECTION FROM THE HAZARDOUS MATERIAL CONSULTANT PRIOR TO THE CONTINUATION OF WORK INVOLVING SUSPECTED MATERIAL.

UDIG·NY SAFE DIGGING STARTS HERE
CALL 811

UNAUTHORIZED ADDITION OR ALTERATION OF THIS PLAN IS A VIOLATION OF SECTION 7209(2) OF THE NEW YORK STATE EDUCATION LAW.

ALL PRODUCTION & INTELLECTUAL PROPERTY RIGHT RESERVED ©

CAESARS LANE WWTP EXPANSION PROJECT: PHASE 2

145 CAESARS LN.
NEW WINDSOR, NY 12553

FOR TOWN OF NEW WINDSOR
555 UNION AVE.
NEW WINDSOR, NY 12553

ELECTRICAL SITE PLAN - NEW WORK

REVISIONS

NO.	DESCRIPTION	DATE

ISSUED DATE:	06 JUNE, 2025
DESIGN BY:	RRM
DRAWN BY:	CDJ
CHECKED BY:	MGR
REVIEWED BY:	JER

SHEET NO.

E-101

PROJECT # 18-732 PHASE #

Calculation Summary							
Label	CalcType	Units	Avg	Max	Min	Avg/Min	Max/Min
BIOFILTER_Top	Illuminance	Fc	1.65	1.8	1.3	1.27	1.38
DISINFECTION TANK_Top	Illuminance	Fc	1.23	1.7	0.7	1.76	2.43
ENTIRE SITE_Planar	Illuminance	Fc	0.64	9.6	0.0	N.A.	N.A.
MBR TANKS_Top	Illuminance	Fc	1.34	4.3	0.6	2.23	7.17
PRI SETTLING TANK #1_Top_1	Illuminance	Fc	1.18	1.4	1.0	1.18	1.40
PRI SETTLING TANK #2_Top_1	Illuminance	Fc	0.93	1.4	0.8	1.16	1.75
PRI SETTLING TANK #3_Top	Illuminance	Fc	0.88	1.1	0.7	1.26	1.57
PRI SETTLING TANK #4_Top_1	Illuminance	Fc	1.22	1.4	1.1	1.11	1.27
SLUDGE-THERMAER-SNDR TANKS_Top	Illuminance	Fc	1.57	3.1	0.4	3.93	7.75

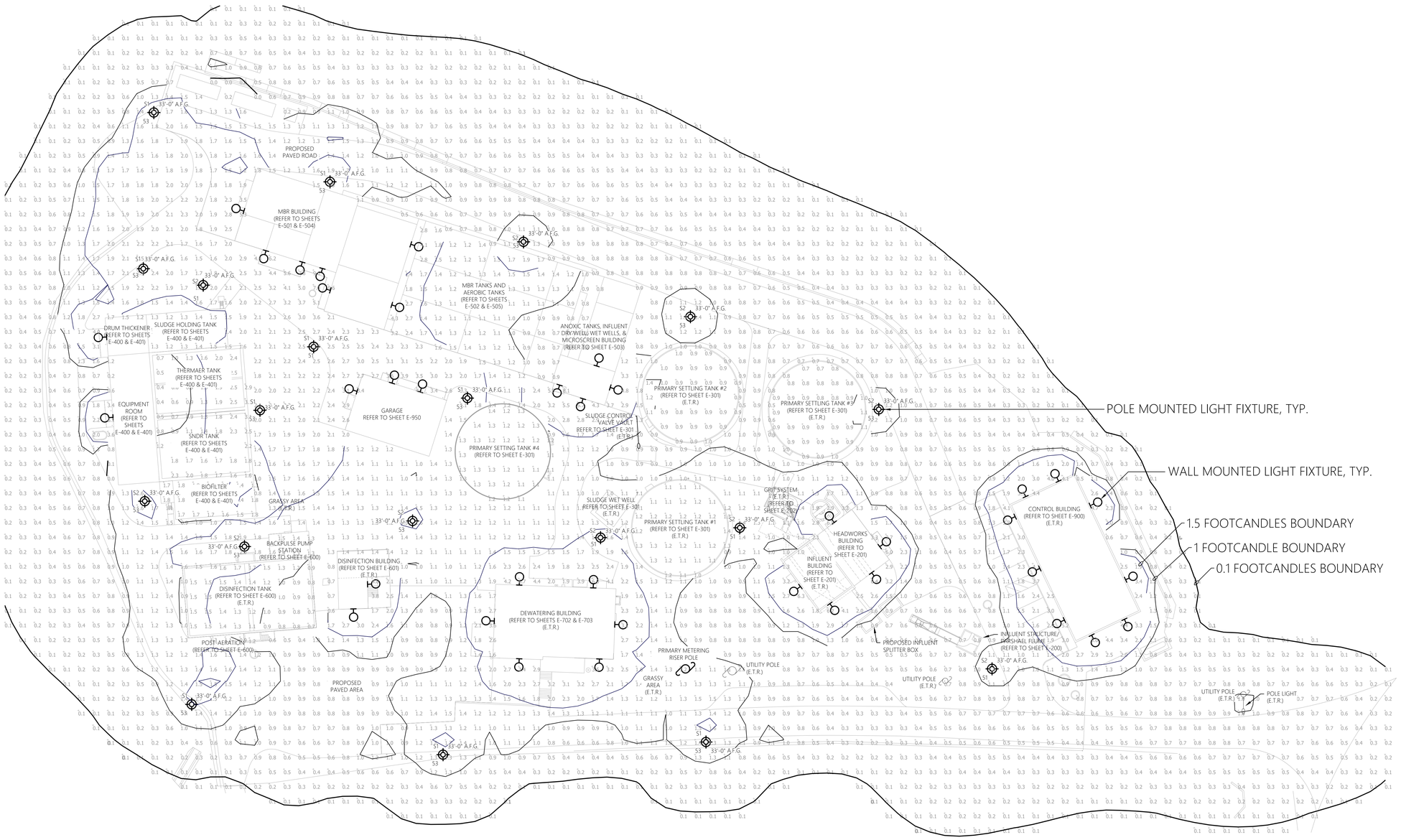

0' 30' 60'
SCALE: 1" = 30'-0"

1 ELECTRICAL SITE LIGHTING CALCULATION
E-102 SCALE: 1" = 30'-0" CAESARS LANE WASTEWATER TREATMENT PLANT

MHE ENGINEERING
33 Airport Center Drive, Suite 202
New Windsor, NY 12553
(845) 567-3100
111 Wheatfield Drive, Suite 1
Milford, PA 18337
(570) 296-2765

BID ADDENDUM

JADE STONE ENGINEERING

STATE OF NEW YORK · JEFFREY E. ROBINSON · 095896 · LICENSED PROFESSIONAL ENGINEER

HAZARDOUS MATERIAL NOTE:
THE SERVICES PROVIDED BY MHE, INCLUDING ALL WORK DEPICTED ON MHE PLANS, DO NOT INCLUDE SERVICES RELATED TO THE IDENTIFICATION, CONTROLS OR HANDLING OF HAZARDOUS MATERIALS, INCLUDING SUCH MATERIALS AS ASBESTOS AND LEAD PAINT. ALL TESTING, IDENTIFICATION, ABATEMENT, CONTROLS, AND HANDLING OF HAZARDOUS MATERIALS SHALL BE UNDERTAKEN BY A HAZARDOUS MATERIAL CONSULTANT AND CERTIFIED PROFESSIONALS. IF SUCH MATERIALS HAVE BEEN IDENTIFIED, CONTRACTOR WILL COMMUNICATE DIRECTLY WITH HAZARDOUS MATERIAL PROFESSIONAL FOR THE PERFORMANCE OF ANY WORK ON OR ADJACENT TO SAID MATERIALS. IF UNIDENTIFIED MATERIALS OF CONCERN ARE ENCOUNTERED WHILE UNDERTAKING THE WORK SHOWN HEREON, CONTRACTOR SHALL IMMEDIATELY NOTIFY ENGINEER AND OWNER, AND SHALL OBTAIN DIRECTION FROM THE HAZARDOUS MATERIAL CONSULTANT PRIOR TO THE CONTINUATION OF WORK INVOLVING SUSPECTED MATERIAL.

UDIG·NY SAFE DIGGING STARTS HERE
CALL 811

UNAUTHORIZED ADDITION OR ALTERATION OF THIS PLAN IS A VIOLATION OF SECTION 7209(2) OF THE NEW YORK STATE EDUCATION LAW.

ALL PRODUCTION & INTELLECTUAL PROPERTY RIGHT RESERVED ©

CAESARS LANE WWTP EXPANSION PROJECT: PHASE 2
145 CAESARS LN.
NEW WINDSOR, NY 12553
FOR TOWN OF NEW WINDSOR
555 UNION AVE.
NEW WINDSOR, NY 12553

ELECTRICAL SITE LIGHTING CALCULATION

REVISIONS

NO.	DESCRIPTION	DATE

ISSUED DATE:	06 JUNE, 2025
DESIGN BY:	RRM
DRAWN BY:	CDJ
CHECKED BY:	MGR
REVIEWED BY:	JER

SHEET NO.
E-102

PROJECT # 18-732 PHASE #

GENERAL DEMOLITION NOTES:

MECHANICAL EQUIPMENT & MISC. ELECTRICAL EQUIPMENT:
WHERE INDICATED TO BE DEMOLISHED:
- REFER TO GENERAL CONTRACT DRAWINGS FOR AN ACCURATE DEPICTION OF ALL DEMOLITION REQUIRED AS PART OF THIS CONTRACT.
- REMOVE ALL WIRE (POWER & CONTROLS) & EXPOSED CONDUIT BACK TO SOURCE PANEL, UNLESS OTHERWISE INDICATED (UOI).
- REMOVE ANY ASSOCIATED MOTOR STARTERS, CONTROL STATIONS, &/OR DISCONNECTS, UOI.
- REMOVE CIRCUIT WIRING FROM SOURCE PANEL AND REMOVE ASSOCIATED SOURCE CIRCUIT BREAKER, UOI.
- REMOVE ALL INTERLOCK CIRCUITRY, UOI.
- PROVIDE REVISED TYPED PANELBOARD DIRECTORIES FOR ALL EXISTING TO REMAIN PANELS WHERE CIRCUITS ARE TO BE REMOVED.
- REMOVE ALL ASSOCIATED MOUNTING HARDWARE, BRACKETS, AND EQUIPMENT, UOI.

RECEPTACLES:
WHERE INDICATED TO BE DEMOLISHED:
- REMOVE ALL RECEPTACLES IMPACTED BY WALL MODIFICATIONS AND OVERALL PROJECT IMPROVEMENTS. **NOTE** ALL EXISTING RECEPTACLES MAY NOT BE SHOWN ON THESE DEMOLITION PLANS. MINOR FIELD VERIFICATION REQUIRED.
- REMOVE DEVICE, AND ALL ASSOCIATED WIRE & CONDUIT BACK TO SOURCE OR NEAREST ACTIVE JUNCTION BOX, UOI.

LIGHTING:
WHERE INDICATED TO BE DEMOLISHED:
- REMOVE ALL FIXTURES THROUGHOUT SPACE. **NOTE** ALL EXISTING LIGHTING FIXTURES MAY NOT BE SHOWN ON THESE DEMOLITION PLANS. MINOR FIELD VERIFICATION REQUIRED.
- REMOVE ALL ASSOCIATED WIRING BACK TO SOURCE, UOI.
- REMOVE SWITCHING AND CONTROL DEVICES, UOI.
- REMOVE CONTACTORS ASSOCIATED WITH LOW VOLTAGE SWITCHING DEVICES, UOI.
- DISPOSE OF ALL LAMPS IN ACCORDANCE WITH STATE/FEDERAL AND EPA REQUIREMENTS.

PANELBOARD REMOVAL AND REPLACEMENT:
- REFER TO SINGLE LINE DIAGRAMS FOR SCOPE OF WORK.

CIRCUIT AND FEEDER REMOVAL AND REPLACEMENT:
- MAINTAIN ANY EXISTING NON-IMPACTED PANELBOARDS AND ANY NON-IMPACTED CIRCUITS WHICH ARE EXISTING TO REMAIN.
- WHERE CIRCUITS ARE AFFECTED BY MODIFICATION/REMOVAL ACTIVITIES, PROVIDE NECESSARY CIRCUIT EXTENSIONS AND ALL NECESSARY LABOR/MATERIALS AS NECESSARY TO REPAIR AND RE-CONNECT CIRCUIT(S).
- ANY CIRCUITS/FEEDERS WHICH REQUIRE SHUTDOWN TO ACCOMMODATE WORK SHALL BE COORDINATED WITH THE APPLICABLE CONTRACTOR, OWNER, AND ENGINEER WELL IN ADVANCE.

BUILDING/STRUCTURE GROUND SYSTEM:
- CONTRACTOR TO CAREFULLY PROTECT AND MAINTAIN ALL GROUND SYSTEMS ASSOCIATED WITH BUILDINGS/STRUCTURES EXISTING TO REMAIN.
- CONTRACTOR TO REMOVE ALL GROUND SYSTEMS ASSOCIATED WITH BUILDING/STRUCTURES TO BE REMOVED.
- GROUND SYSTEM COMPONENTS MAY INCLUDE, BUT ARE NOT LIMITED TO, GROUNDING CONDUCTORS, JUMPERS, TERMINATIONS, RODS, AND AIR TERMINALS. CONTRACTOR TO FIELD VERIFY EXISTING CONDITIONS PRIOR TO COMMENCEMENT OF DEMOLITION.

HAZARDOUS MATERIAL REMOVAL:
PERFORM WORK FOR REMOVAL AND DISPOSAL OF EQUIPMENT AND MATERIALS CONTAINING TOXIC SUBSTANCES REGULATED UNDER THE FEDERAL TOXIC SUBSTANCES CONTROL ACT (TSCA) IN ACCORDANCE WITH APPLICABLE FEDERAL, STATE, AND LOCAL REGULATIONS. APPLICABLE EQUIPMENT AND MATERIALS INCLUDE, BUT ARE NOT LIMITED TO:
- PCB-CONTAINING ELECTRICAL EQUIPMENT, INCLUDING TRANSFORMERS, CAPACITORS, AND SWITCHES.
- PCB- AND DEHP-CONTAINING LIGHTING BALLASTS.
- MERCURY-CONTAINING LAMPS AND TUBES, INCLUDING FLUORESCENT LAMPS, HIGH INTENSITY DISCHARGE (HID), ARC LAMPS, ULTRA-VIOLET, HIGH PRESSURE SODIUM, MERCURY VAPOR, IGNITRON TUBES, NEON, AND INCANDESCENT.
- CONTRACTOR TO COORDINATE ANY REQUIRED HAZARDOUS MATERIAL REMOVAL WITH THE APPLICABLE CONTRACTOR, OWNER, AND ENGINEER.

GENERAL SHEET NOTES:

1. REFER TO E-001 FOR ELECTRICAL LEGENDS, ABBREVIATIONS, AND GENERAL PROJECT NOTES.
2. ITEMS INDICATED TO BE REMOVED:
   2.1. REMOVE ALL CONDUCTORS AND EXPOSED CONDUIT BACK TO SOURCE (UOI).
   2.2. REMOVE CIRCUIT WIRING AND CIRCUIT BREAKER FROM SOURCE PANEL (UOI).
   2.3. REMOVE ALL ASSOCIATED CONTROL CONDUCTORS, CONDUITS, AND DEVICES (UOI).
   2.4. REMOVE ASSOCIATED STARTERS, DISCONNECTS, AND ASSOCIATED CIRCUITRY (UOI).
   2.5. REMOVE EQUIPMENT PADS & MOUNTING HARDWARE, BRACKETS, ACCESSORIES, ETC... (UOI).
   2.6. REVISE PANELBOARD AND MOTOR CONTROL CENTER DIRECTORIES/NAME PLATES AS CHANGES OCCUR (UOI).
3. THESE DEMOLITION DRAWINGS ARE SCHEMATIC IN NATURE AND ARE BASED ON CURSORY FIELD OBSERVATION AND EXISTING DRAWINGS. IT IS NOT THE INTENTION OF THESE DRAWINGS TO INDICATE EVERY DEVICE/FIXTURE REQUIRING REMOVAL/DEMO RATHER GENERAL SYSTEMS WHICH ARE TO BE REMOVED.
4. CIRCUITS NOT IN AREA OF WORK THAT ARE AFFECTED BY WORK SHALL BE OPERATIONAL DURING PROJECT. PROVIDE TEMPORARY CIRCUITS AS NECESSARY.
5. CIRCUIT, EQUIPMENT, AND DEVICE REMOVAL SHALL NOT AFFECT THE INTEGRITY OR FUNCTIONALITY OF CIRCUITS TO REMAIN. ALL CIRCUITS TO REMAIN SHALL BE MAINTAINED. PROVIDE ALL NECESSARY CIRCUIT MODIFICATIONS AND EXTENSIONS.
6. WHERE REMOVALS LEAVE HOLES AND DAMAGED SURFACES EXPOSED IN THE FINISHED WORK, PATCH AND REPAIR THESE HOLES AND DAMAGED SURFACES TO MATCH ADJACENT FINISHED SURFACES. WHERE NEW WORK IS TO BE APPLIED TO EXISTING SURFACES, PERFORM REMOVALS, AND PATCHING IN A MANNER TO PRODUCE SURFACES SUITABLE FOR RECEIVING NEW WORK. COORDINATE ALL WORK WITH APPLICABLE CONTRACTOR, OWNER, AND ENGINEER.
7. COORDINATE WITH ALL CONTRACT DRAWINGS AND TRADE CONTRACTORS FOR ADDITIONAL EQUIPMENT THAT IS TO BE DEMOLISHED. FOR ALL EQUIPMENT SHOWN/INDICATED FOR REMOVAL, DISCONNECT AND REMOVE ELECTRICAL CIRCUIT INCLUDING CONDUCTORS AND CONDUIT BACK TO SOURCE.
8. NOT ALL EQUIPMENT/DEVICES ARE SHOWN FOR CLARITY. CONTRACTOR SHALL FIELD VERIFY ALL EXISTING CONDITIONS AND REPORT DISCREPANCIES TO ENGINEER PRIOR TO COMMENCEMENT OF DEMOLITION.
9. REFER TO THE ELECTRICAL SINGLE LINE DIAGRAMS, SCHEDULES & DETAILS FOR ADDITIONAL DEMOLITION INFORMATION/REQUIREMENTS.
10. COORDINATE ALL ASPECTS OF SEQUENCE OF REMOVAL WITH THE APPLICABLE CONTRACTOR, OWNER, AND ENGINEER. REFER TO SPECIFICATIONS AND DEMOLITION SINGLE LINE DIAGRAM FOR ADDITIONAL INFORMATION.
11. WHERE REMOVAL OF CONDUIT SYSTEM IS NOT FEASIBLE, REMOVE ALL CONDUCTORS FROM CONDUIT SYSTEM, CUT FLUSH, CAP CONDUIT SYSTEM, AND ABANDON IN PLACE. FEASIBLE IS DEFINED AS BEING LOCATED WITHIN A CONCRETE DUCT BANK OR CONCRETE SLAB. ALL OTHER INSTANCES TO HAVE THE CONDUIT & CIRCUITRY TO BE REMOVED IN THERE ENTIRETY. FIELD VERIFY AND COORDINATE FINAL REQUIREMENTS WITH THE APPLICABLE CONTRACTOR, OWNER, AND ENGINEER, TYPICAL.

GENERAL NEW WORK NOTES:

1. REFER TO E-001 FOR ELECTRICAL LEGENDS, ABBREVIATIONS AND GENERAL PROJECT NOTES.
2. PROVIDE A DEDICATED GROUNDING CONDUCTOR FOR ALL ELECTRICAL EQUIPMENT AND ASSOCIATED EQUIPMENT/DEVICES.
3. EQUIPMENT & DEVICE LOCATIONS ARE SHOWN AS GENERAL IN NATURE. REFER TO ALL TRADE CONTRACT DRAWINGS AND COORDINATE WITH ALL TRADE CONTRACTORS FOR EXACT LOCATIONS. CLOSE CONTRACTOR COORDINATION REQUIRED.
4. ALL PROPOSED EQUIPMENT LOCATIONS/INSTALLATIONS TO COMPLY WITH NEC ARTICLE 110.26 'SPACES ABOUT ELECTRICAL EQUIPMENT'.
5. CONTRACTOR TO PROVIDE ALL REQUIRED MOUNTING HARDWARE, EQUIPMENT, BRACKETS, SUPPORTS, ACCESSORIES, ETC... PROVIDE AS STAINLESS STEEL IN CORROSIVE ENVIRONMENTS, EXTERIOR APPLICATIONS, OR WHERE INDICATED ON THE CONTRACT DRAWINGS.
6. NOT ALL EQUIPMENT/DEVICES MAY BE SHOWN FOR CLARITY. CONTRACTOR SHALL FIELD VERIFY ALL EXISTING AND PROPOSED CONDITIONS PRIOR TO COMMENCEMENT OF CONSTRUCTION. COORDINATE WITH APPLICABLE CONTRACTOR, OWNER, AND ENGINEER.
7. CONTRACTOR RESPONSIBLE FOR MOUNTING OF APPLICABLE CONTRACTOR FURNISHED PANELS. COORDINATE WITH APPLICABLE CONTRACTOR AND PROVIDE ALL NECESSARY MOUNTING HARDWARE/EQUIPMENT.
8. CONTRACTOR TO COORDINATE ALL ASPECTS OF SEQUENCE OF CONSTRUCTION WITH THE APPLICABLE CONTRACTOR, OWNER, AND ENGINEER.
9. CONTRACTOR TO ADJUST FINAL INTERIOR LIGHT FIXTURE LOCATIONS TO AVOID CONFLICTS WITH EQUIPMENT, PIPING SYSTEMS, AND DUCTWORK. COORDINATE WITH ALL TRADES.
10. CONTRACTOR TO ADJUST FINAL AIMING ANGLE OF EXTERIOR LIGHT FIXTURES TO LIGHT DESIRED AREAS AND MINIMIZE LIGHT POLLUTION. COORDINATE WITH APPLICABLE CONTRACTOR, OWNER, AND ENGINEER. REFER TO THE LUMINAIRE SCHEDULE FOR ADDITIONAL INFORMATION/REQUIREMENTS.
11. ALL EXTERIOR RECEPTACLES TO BE INSTALLED AT A HEIGHT OF 36" A.F.G.
12. CONTRACTOR TO COORDINATE ALL CONDUIT PENETRATIONS AND CONDUIT ROUTING WITH APPLICABLE CONTRACTOR, OWNER, AND ENGINEER PRIOR TO ROUGH-IN.
13. REFER TO ELECTRICAL SINGLE LINE DIAGRAMS, SPECIFICATIONS, RISER DIAGRAMS, SCHEDULES & DETAILS FOR ADDITIONAL INFORMATION/REQUIREMENTS.
14. CONTRACTOR TO PROVIDE LABEL FOR ALL PROPOSED ELECTRICAL EQUIPMENT. REFER TO SPECIFICATIONS FOR LABELING INFORMATION/REQUIREMENTS. PROVIDE LABEL FOR ALL LIGHT SWITCHES/TIME SWITCHES INDICATING LOAD SERVED, AS WELL AS ALARM LIGHTS/HORNS.
15. ALL EQUIPMENT/DEVICES INSTALLED ON EXTERIOR WALLS OF THE HEADWORKS ROOM TO BE INSTALLED 3'-0" MINIMUM FROM ANY OPENINGS (DOORS, LOUVERS, ETC.). FINAL REQUIREMENTS TO BE IN COMPLIANCE WITH THE LATEST EDITION OF NFPA 820.

SHEET KEY NOTES:

1. CONTRACTOR TO PROVIDE COMPLETE ELECTRICAL DEMOLITION FOR THIS AREA (UNLESS OTHERWISE INDICATED). REMOVE THE FOLLOWING DEVICES INCLUDING BUT NOT LIMITED TO; ALL ELECTRICAL DISTRIBUTION EQUIPMENT, CONTROLLERS, CONTROL PANELS, DISCONNECTS, MOTOR STARTERS, RECEPTACLES, INTERIOR/EXTERIOR LIGHTING, JUNCTION BOXES, BONDING/GROUNDING ELECTRODES, ELECTRIC VALVES, MOTORS (DISCONNECT & REMOVE BRANCH CIRCUITRY). AND INSTRUMENTATION/CONTROLS. REMOVE ALL ASSOCIATED CIRCUITRY BACK TO SOURCE. COORDINATE REMOVAL EFFORTS CLOSELY WITH APPLICABLE CONTRACTOR, OWNER, AND ENGINEER.
2. CONTRACTOR TO CLOSELY COORDINATE THE REMOVAL EFFORTS OF ALL PLANT PROCESS EQUIPMENT/DEVICES SCHEDULED FOR REMOVAL WITH APPLICABLE CONTRACTOR, OWNER, AND ENGINEER.
3. NOTE, CONTRACTOR TO ENSURE ALL ELECTRICAL BRANCH CIRCUITS AND CONDUITS ARE REMOVED IN THIS AREA ASSOCIATED WITH EQUIPMENT SCHEDULED FOR REMOVAL, TO AVOID CONFLICT WITH PROPOSED EQUIPMENT, AND PIPING SYSTEMS. COORDINATE ALL EFFORTS CLOSELY WITH APPLICABLE CONTRACTOR, OWNER, AND ENGINEER.
4. JUNCTION BOX IS TO BE REMOVED. NOTE, ALL BOXES AND RACEWAY SYSTEMS ASSOCIATED WITH EQUIPMENT SCHEDULED FOR REMOVAL ARE TO BE REMOVED IN THEIR ENTIRETY.
5. PROVIDE ALL REQUIRED STAINLESS STEEL UNISTRUT, MOUNTING HARDWARE, BRACKETS, SUPPORTS, ACCESSORIES, ETC... FOR STANCHION MOUNTING ON INFLUENT STRUCTURE HANDRAIL AS SHOWN/INDICATED.
6. STRUCTURE INTERIOR IS A CLASS I, DIVISION II, GROUP D SPACE. THE CLASS I, DIVISION II, GROUP D SPACE EXTENDS 18" ABOVE TOP OF STRUCTURE WALL AND EXTENDS 10'-0" HORIZONTALLY FROM THE STRUCTURE EXTERIOR WALL. ALL WIRING METHODS WITHIN THIS SPACE TO COMPLY WITH NEC ARTICLE 501. ALL ELECTRICAL EQUIPMENT AND DEVICES WITHIN THIS SPACE TO BE EXPLOSION PROOF RATED FOR USE IN A CLASS I, DIVISION II, GROUP D ENVIRONMENT.
7. ROUTING AND ATTACHMENT METHODS OF ALL CONDUITS WITHIN STRUCTURE ARE TO BE CLOSELY COORDINATED WITH APPLICABLE CONTRACTOR, OWNER, AND ENGINEER TO AVOID CONFLICTS. ALL RACEWAY TO BE PVC COATED RGS BY PLASTI-BOND, OR APPROVED EQUAL. ALL MOUNTING HARDWARE, BRACKETS, SUPPORTS, CHANNELS, FITTINGS, CLAMPS, ETC... TO BE A CORROSION RESISTANT PRODUCT LINE AS MANUFACTURED BY POWER-STRUT DEFENDER, OR APPROVED EQUAL. SUBMIT PRODUCT DATA TO ENGINEER DURING SUBMITTAL PHASE FOR APPROVAL. REFER TO RACEWAY SCHEDULE FOR ADDITIONAL INFORMATION.
8. ALL ELECTRICAL EQUIPMENT, COMPONENTS, DEVICES, AND RACEWAY SYSTEMS TO BE KEPT OUT OF CLASSIFIED AREAS TO GREATEST EXTENT POSSIBLE.
9. CONTRACTOR TO PROVIDE 3/4"Φ x 10' COPPER GROUND ROD. BOND ALL METAL STRUCTURES (HANDRAIL, GRATING, ETC...) TO GROUND ROD USING #2 COPPER CONDUCTOR WITHIN RGS CONDUIT. REFER TO TYPICAL GROUNDING DETAILS FOR ADDITIONAL INFORMATION/REQUIREMENTS.
10. GROUND RING. GROUND RING TO BE BURIED AT MINIMUM 3 FEET BELOW FINISHED GRADE. GROUND RING TO BE KEPT AT MINIMUM OF 3 FEET AWAY FROM STRUCTURE AT ALL TIMES. PROVIDE AND INSTALL 3/4"Ø x 10' GROUND RODS AT EACH CORNER OF GROUND RING FOR A TOTAL OF FOUR (4) GROUND RODS. ALL GROUND CONDUCTORS SHALL BE #2 COPPER, U.O.N.

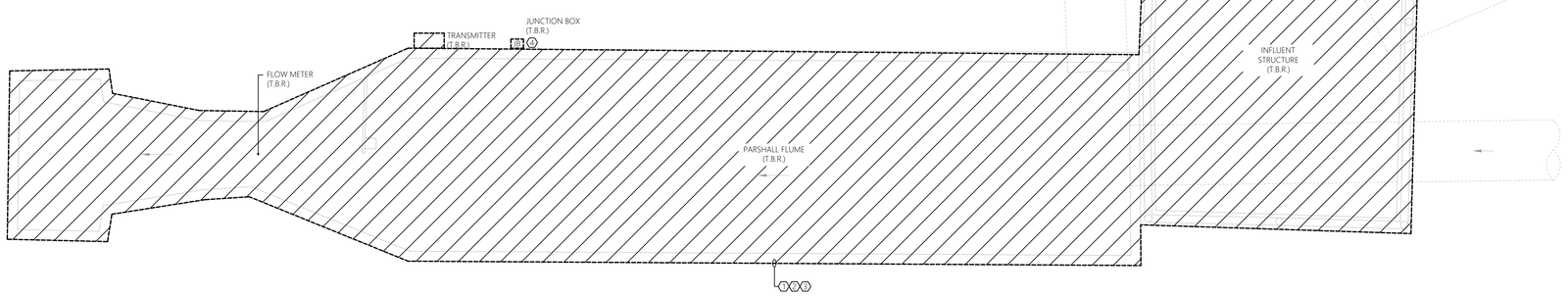

1 E-200 ELECTRICAL DEMOLITION PLAN
SCALE: 1/2" = 1'-0" INFLUENT STRUCTURE

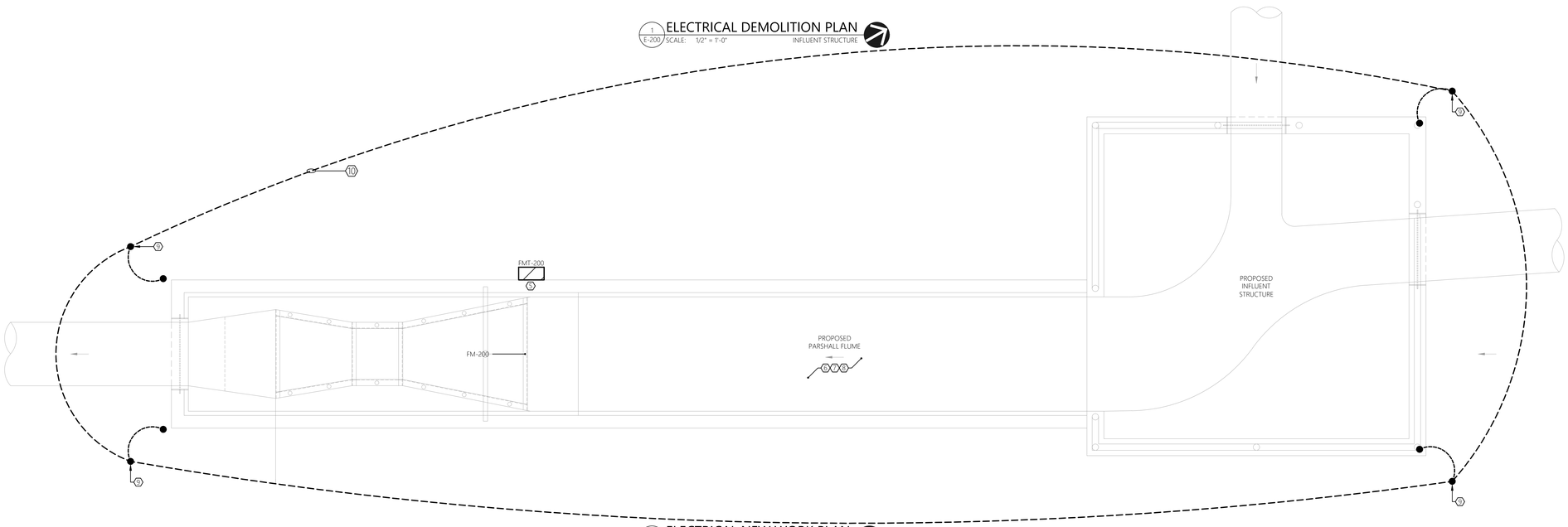

2 E-200 ELECTRICAL NEW WORK PLAN
SCALE: 1/2" = 1'-0" INFLUENT STRUCTURE

0' 1' 2' 3' 4'
SCALE: 1/2" = 1'-0"

MHE ENGINEERING
33 Airport Center Drive, Suite 202
New Windsor, NY 12553
(845) 587-3100
111 Wheatfield Drive, Suite 1
Milford, PA 18337
(570) 296-2765

BID ADDENDUM

JADE STONE ENGINEERING

STATE OF NEW YORK · JEFFREY E. ROBINSON · 095896 · LICENSED PROFESSIONAL ENGINEER

HAZARDOUS MATERIAL NOTE:
THE SERVICES PROVIDED BY MHE, INCLUDING ALL WORK DEPICTED ON MHE PLANS, DO NOT INCLUDE SERVICES RELATED TO THE IDENTIFICATION, CONTROLS OR HANDLING OF HAZARDOUS MATERIALS, INCLUDING SUCH MATERIALS AS ASBESTOS AND LEAD PAINT. ALL TESTING, IDENTIFICATION, ABATEMENT, CONTROLS, AND HANDLING OF HAZARDOUS MATERIALS SHALL BE UNDERTAKEN BY A HAZARDOUS MATERIAL CONSULTANT AND CERTIFIED PROFESSIONALS. IF SUCH MATERIALS HAVE BEEN IDENTIFIED, CONTRACTOR WILL COMMUNICATE DIRECTLY WITH HAZARDOUS MATERIAL PROFESSIONAL FOR THE PERFORMANCE OF ANY WORK ON OR ADJACENT TO SAID MATERIALS. IF UNIDENTIFIED MATERIALS OF CONCERN ARE ENCOUNTERED WHILE UNDERTAKING THE WORK SHOWN HEREON, CONTRACTOR SHALL IMMEDIATELY NOTIFY ENGINEER AND OWNER, AND SHALL OBTAIN DIRECTION FROM THE HAZARDOUS MATERIAL CONSULTANT PRIOR TO THE CONTINUATION OF WORK INVOLVING SUSPECTED MATERIAL.

UDIG·NY SAFE DIGGING STARTS HERE
CALL 811

UNAUTHORIZED ADDITION OR ALTERATION OF THIS PLAN IS A VIOLATION OF SECTION 7209(2) OF THE NEW YORK STATE EDUCATION LAW.

ALL PRODUCTION & INTELLECTUAL PROPERTY RIGHT RESERVED ©

CAESARS LANE WWTP
EXPANSION PROJECT:
PHASE 2
145 CAESARS LN.
NEW WINDSOR, NY 12553
FOR TOWN OF NEW WINDSOR
555 UNION AVE.
NEW WINDSOR, NY 12553

ELECTRICAL
FLOOR PLANS -
INFLUENT STRUCTURE

REVISIONS

NO.	DESCRIPTION	DATE

ISSUED DATE:	06 JUNE, 2025
DESIGN BY:	RRM
DRAWN BY:	CDJ
CHECKED BY:	MGR
REVIEWED BY:	JER

SHEET NO.
E-200

PROJECT # 18-732 PHASE #

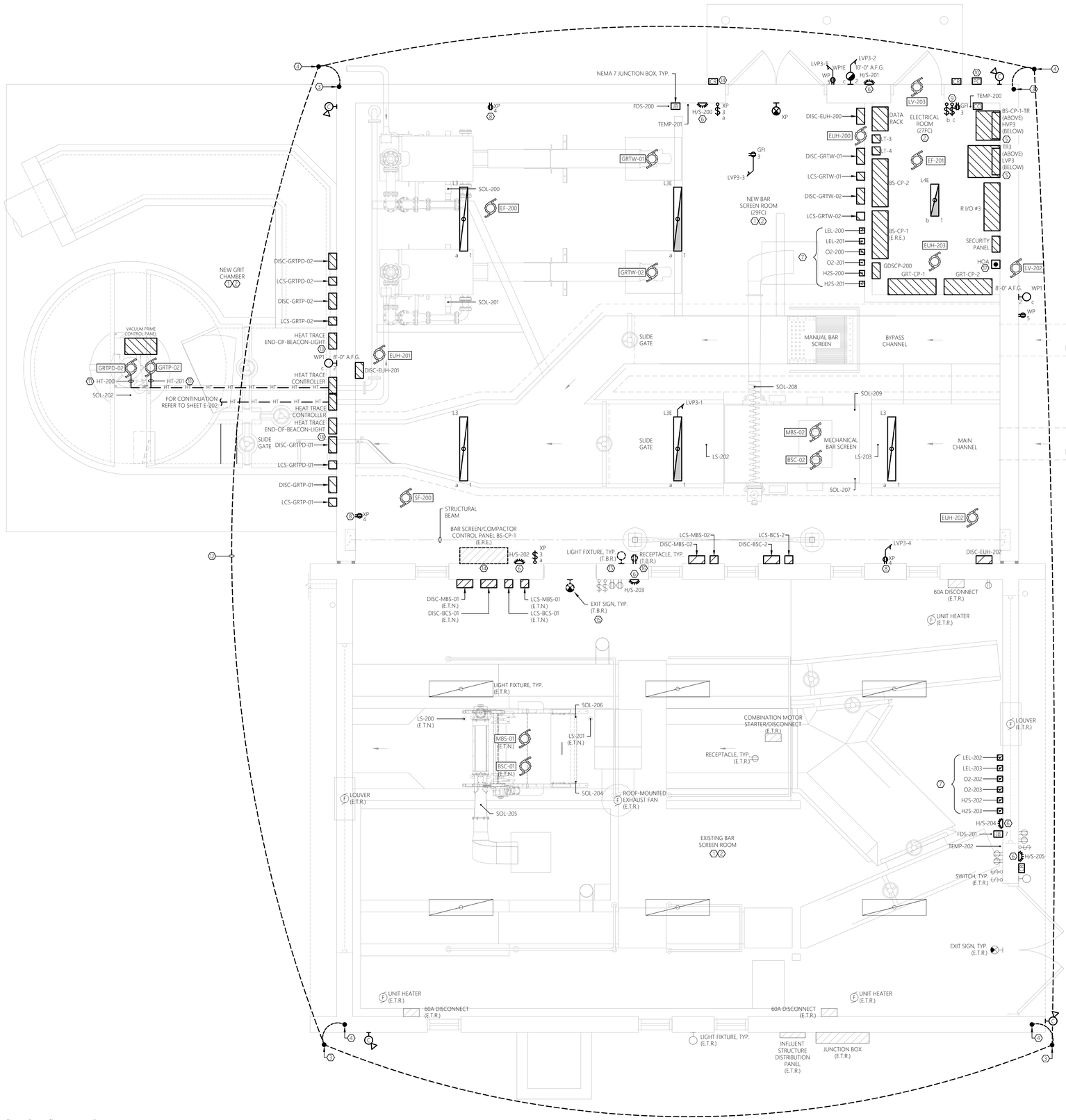

1 E-201 ELECTRICAL POWER, SYSTEMS, & LGHTING PLAN
SCALE: 1/2" = 1'-0"
HEADWORKS BUILDING

GENERAL DEMOLITION NOTES:

MECHANICAL EQUIPMENT & MISC. ELECTRICAL EQUIPMENT:
WHERE INDICATED TO BE DEMOLISHED:

- REFER TO GENERAL CONTRACT DRAWINGS FOR AN ACCURATE DEPICTION OF ALL DEMOLITION REQUIRED AS PART OF THIS CONTRACT.
- REMOVE ALL WIRE (POWER & CONTROLS) & EXPOSED CONDUIT BACK TO SOURCE PANEL, UNLESS OTHERWISE INDICATED (UOI).
- REMOVE ANY ASSOCIATED MOTOR STARTERS, CONTROL STATIONS, &/OR DISCONNECTS, UOI.
- REMOVE CIRCUIT WIRING FROM SOURCE PANEL AND REMOVE ASSOCIATED SOURCE CIRCUIT BREAKER, UOI.
- REMOVE ALL INTERLOCK CIRCUITRY, UOI.
- PROVIDE REVISED TYPED PANELBOARD DIRECTORIES FOR ALL EXISTING TO REMAIN PANELS WHERE CIRCUITS ARE TO BE REMOVED.
- REMOVE ALL ASSOCIATED MOUNTING HARDWARE, BRACKETS, AND EQUIPMENT, UOI.

RECEPTACLES:
WHERE INDICATED TO BE DEMOLISHED:

- REMOVE ALL RECEPTACLES IMPACTED BY WALL MODIFICATIONS AND OVERALL PROJECT IMPROVEMENTS. **NOTE** ALL EXISTING RECEPTACLES MAY NOT BE SHOWN ON THESE DEMOLITION PLANS. MINOR FIELD VERIFICATION REQUIRED.
- REMOVE DEVICE, AND ALL ASSOCIATED WIRE & CONDUIT BACK TO SOURCE OR NEAREST ACTIVE JUNCTION BOX, UOI.

LIGHTING:
WHERE INDICATED TO BE DEMOLISHED:

- REMOVE ALL FIXTURES THROUGHOUT SPACE. **NOTE** ALL EXISTING LIGHTING FIXTURES MAY NOT BE SHOWN ON THESE DEMOLITION PLANS. MINOR FIELD VERIFICATION REQUIRED.
- REMOVE ALL ASSOCIATED WIRING BACK TO SOURCE, UOI.
- REMOVE SWITCHING AND CONTROL DEVICES, UOI.
- REMOVE CONTACTORS ASSOCIATED WITH LOW VOLTAGE SWITCHING DEVICES, UOI.
- DISPOSE OF ALL LAMPS IN ACCORDANCE WITH STATE/FEDERAL AND EPA REQUIREMENTS.

PANELBOARD REMOVAL AND REPLACEMENT:

- REFER TO SINGLE LINE DIAGRAMS FOR SCOPE OF WORK.

CIRCUIT AND FEEDER REMOVAL AND REPLACEMENT:

- MAINTAIN ANY EXISTING NON-IMPACTED PANELBOARDS AND ANY NON-IMPACTED CIRCUITS WHICH ARE EXISTING TO REMAIN.
- WHERE CIRCUITS ARE AFFECTED BY MODIFICATION/REMOVAL ACTIVITIES, PROVIDE NECESSARY CIRCUIT EXTENSIONS AND ALL NECESSARY LABOR/MATERIALS AS NECESSARY TO REPAIR AND RE-CONNECT CIRCUIT(S).
- ANY CIRCUITS/FEEDERS WHICH REQUIRE SHUTDOWN TO ACCOMMODATE WORK SHALL BE COORDINATED WITH THE OWNER WELL IN ADVANCE.

BUILDING/STRUCTURE GROUND SYSTEM:

- CONTRACTOR TO CAREFULLY PROTECT AND MAINTAIN ALL GROUND SYSTEMS ASSOCIATED WITH BUILDINGS/STRUCTURES EXISTING TO REMAIN.
- CONTRACTOR TO REMOVE ALL GROUND SYSTEMS ASSOCIATED WITH BUILDING/STRUCTURES TO BE REMOVED.
- GROUND SYSTEM COMPONENTS MAY INCLUDE, BUT ARE NOT LIMITED TO, GROUNDING CONDUCTORS, JUMPERS, TERMINATIONS, RODS, AND AIR TERMINALS. CONTRACTOR TO FIELD VERIFY EXISTING CONDITIONS PRIOR TO COMMENCEMENT OF DEMOLITION.

HAZARDOUS MATERIAL REMOVAL:
PERFORM WORK FOR REMOVAL AND DISPOSAL OF EQUIPMENT AND MATERIALS CONTAINING TOXIC SUBSTANCES REGULATED UNDER THE FEDERAL TOXIC SUBSTANCES CONTROL ACT (TSCA) IN ACCORDANCE WITH APPLICABLE FEDERAL, STATE, AND LOCAL REGULATIONS. APPLICABLE EQUIPMENT AND MATERIALS INCLUDE, BUT ARE NOT LIMITED TO:

- PCB-CONTAINING ELECTRICAL EQUIPMENT, INCLUDING TRANSFORMERS, CAPACITORS, AND SWITCHES.
- PCB- AND DEHP-CONTAINING LIGHTING BALLASTS.
- MERCURY-CONTAINING LAMPS AND TUBES, INCLUDING FLUORESCENT LAMPS, HIGH INTENSITY DISCHARGE (HID), ARC LAMPS, ULTRA-VIOLET, HIGH PRESSURE SODIUM, MERCURY VAPOR, IGNITRON TUBES, NEON, AND INCANDESCENT.
- CONTRACTOR TO COORDINATE ANY REQUIRED HAZARDOUS MATERIAL REMOVAL WITH THE OWNER, ENGINEER, AND APPLICABLE TRADE CONTRACTOR.

GENERAL SHEET NOTES:

1. REFER TO E-001 FOR ELECTRICAL LEGENDS, ABBREVIATIONS, AND GENERAL PROJECT NOTES.
2. ITEMS INDICATED TO BE REMOVED:
   2.1. REMOVE ALL CONDUCTORS AND EXPOSED CONDUIT BACK TO SOURCE (UOI).
   2.2. REMOVE CIRCUIT WIRING AND CIRCUIT BREAKER FROM SOURCE PANEL (UOI).
   2.3. REMOVE ALL ASSOCIATED CONTROL CONDUCTORS, CONDUITS, AND DEVICES (UOI).
   2.4. REMOVE ASSOCIATED STARTERS, DISCONNECTS, AND ASSOCIATED CIRCUITRY (UOI).
   2.5. REMOVE EQUIPMENT PADS & MOUNTING HARDWARE, BRACKETS, ACCESSORIES, ETC... (UOI).
   2.6. REVISE PANELBOARD AND MOTOR CONTROL CENTER DIRECTORIES/NAME PLATES AS CHANGES OCCUR (UOI).
3. THESE DEMOLITION DRAWINGS ARE SCHEMATIC IN NATURE AND ARE BASED ON CURSORY FIELD OBSERVATION AND EXISTING DRAWINGS. IT IS NOT THE INTENTION OF THESE DRAWINGS TO INDICATE EVERY DEVICE/FIXTURE REQUIRING REMOVAL/DEMO RATHER GENERAL SYSTEMS WHICH ARE TO BE REMOVED.
4. CIRCUITS NOT IN AREA OF WORK THAT ARE AFFECTED BY WORK SHALL BE OPERATIONAL DURING PROJECT. PROVIDE TEMPORARY CIRCUITS AS NECESSARY.
5. CIRCUIT, EQUIPMENT, AND DEVICE REMOVAL SHALL NOT AFFECT THE INTEGRITY OR FUNCTIONALITY OF CIRCUITS TO REMAIN. ALL CIRCUITS TO REMAIN SHALL BE MAINTAINED. PROVIDE ALL NECESSARY CIRCUIT MODIFICATIONS AND EXTENSIONS.
6. WHERE REMOVALS LEAVE HOLES AND DAMAGED SURFACES EXPOSED IN THE FINISHED WORK, PATCH AND REPAIR THESE HOLES AND DAMAGED SURFACES TO MATCH ADJACENT FINISHED SURFACES. WHERE NEW WORK IS TO BE APPLIED TO EXISTING SURFACES, PERFORM REMOVALS, AND PATCHING IN A MANNER TO PRODUCE SURFACES SUITABLE FOR RECEIVING NEW WORK. COORDINATE ALL WORK WITH APPLICABLE TRADE CONTRACTOR, OWNER, AND ENGINEER.
7. COORDINATE WITH ALL CONTRACT DRAWINGS AND TRADE CONTRACTORS FOR ADDITIONAL EQUIPMENT THAT IS TO BE DEMOLISHED. FOR ALL EQUIPMENT SHOWN/INDICATED FOR REMOVAL, DISCONNECT AND REMOVE ELECTRICAL CIRCUIT INCLUDING CONDUCTORS AND CONDUIT BACK TO SOURCE.
8. NOT ALL EQUIPMENT/DEVICES ARE SHOWN FOR CLARITY. CONTRACTOR SHALL FIELD VERIFY ALL EXISTING CONDITIONS AND REPORT DISCREPANCIES TO ENGINEER PRIOR TO COMMENCEMENT OF DEMOLITION.
9. REFER TO THE ELECTRICAL SINGLE LINE DIAGRAMS, SCHEDULES & DETAILS FOR ADDITIONAL DEMOLITION INFORMATION/REQUIREMENTS.
10. COORDINATE ALL ASPECTS OF SEQUENCE OF REMOVAL WITH THE OWNER, ENGINEER, AND APPLICABLE TRADE CONTRACTOR. REFER TO SPECIFICATIONS AND DEMOLITION SINGLE LINE DIAGRAM FOR ADDITIONAL INFORMATION.
11. WHERE REMOVAL OF CONDUIT SYSTEM IS NOT FEASIBLE, REMOVE ALL CONDUCTORS FROM CONDUIT SYSTEM, CUT FLUSH, CAP CONDUIT SYSTEM, AND ABANDON IN PLACE. FEASIBLE IS DEFINED AS BEING LOCATED WITHIN A CONCRETE DUCT BANK OR CONCRETE SLAB. ALL OTHER INSTANCES TO HAVE THE CONDUIT & CIRCUITRY TO BE REMOVED IN THERE ENTIRETY. FIELD VERIFY AND COORDINATE FINAL REQUIREMENTS WITH THE OWNER, TYPICAL.

GENERAL NEW WORK NOTES:

1. REFER TO E-001 FOR ELECTRICAL LEGENDS, ABBREVIATIONS AND GENERAL PROJECT NOTES.
2. PROVIDE A DEDICATED GROUNDING CONDUCTOR FOR ALL ELECTRICAL EQUIPMENT AND ASSOCIATED EQUIPMENT/DEVICES.
3. EQUIPMENT & DEVICE LOCATIONS ARE SHOWN AS GENERAL IN NATURE. REFER TO ALL TRADE CONTRACT DRAWINGS AND COORDINATE WITH ALL TRADE CONTRACTORS FOR EXACT LOCATIONS. CLOSE CONTRACTOR COORDINATION REQUIRED.
4. ALL PROPOSED EQUIPMENT LOCATIONS/INSTALLATIONS TO COMPLY WITH NEC ARTICLE 110.26 'SPACES ABOUT ELECTRICAL EQUIPMENT'.
5. CONTRACTOR TO PROVIDE ALL REQUIRED MOUNTING HARDWARE, EQUIPMENT, BRACKETS, SUPPORTS, ACCESSORIES, ETC... PROVIDE AS STAINLESS STEEL IN CORROSIVE ENVIRONMENTS, EXTERIOR APPLICATIONS, OR WHERE INDICATED ON THE CONTRACT DRAWINGS.
6. NOT ALL EQUIPMENT/DEVICES MAY BE SHOWN FOR CLARITY. CONTRACTOR SHALL FIELD VERIFY ALL EXISTING AND PROPOSED CONDITIONS PRIOR TO COMMENCEMENT OF CONSTRUCTION. COORDINATE WITH ALL TRADES, OWNER, AND ENGINEER.
7. CONTRACTOR RESPONSIBLE FOR MOUNTING OF ALL PANELS FURNISHED BY OTHERS. COORDINATE WITH OWNER, ENGINEER, AND APPLICABLE TRADE CONTRACTOR AND PROVIDE ALL NECESSARY MOUNTING HARDWARE/EQUIPMENT.
8. CONTRACTOR TO COORDINATE ALL ASPECTS OF SEQUENCE OF CONSTRUCTION WITH THE OWNER, ENGINEER, AND ALL TRADE CONTRACTORS.
9. CONTRACTOR TO ADJUST FINAL INTERIOR LIGHT FIXTURE LOCATIONS TO AVOID CONFLICTS WITH EQUIPMENT, PIPING SYSTEMS, AND DUCTWORK. COORDINATE WITH ALL TRADES.
10. CONTRACTOR TO ADJUST FINAL AIMING ANGLE OF EXTERIOR LIGHT FIXTURES TO LIGHT DESIRED AREAS AND MINIMIZE LIGHT POLLUTION. COORDINATE WITH THE OWNER. REFER TO THE LUMINAIRE SCHEDULE FOR ADDITIONAL INFORMATION/REQUIREMENTS.
11. ALL WEATHERPROOF RECEPTACLES TO BE INSTALLED AT A HEIGHT OF 36" A.F.G.
12. CONTRACTOR TO COORDINATE ALL CONDUIT PENETRATIONS AND CONDUIT ROUTING WITH ALL TRADES, OWNER, AND ENGINEER PRIOR TO ROUGH-IN.
13. REFER TO ELECTRICAL SINGLE LINE DIAGRAMS, SPECIFICATIONS, RISER DIAGRAMS, SCHEDULES & DETAILS FOR ADDITIONAL INFORMATION/REQUIREMENTS.
14. CONTRACTOR TO PROVIDE LABEL FOR ALL PROPOSED ELECTRICAL EQUIPMENT. REFER TO SPECIFICATIONS FOR LABELING INFORMATION/REQUIREMENTS. PROVIDE LABEL FOR ALL LIGHT SWITCHES/TIME SWITCHES INDICATING LOAD SERVED, AS WELL AS ALARM LIGHTS/HORNS.
15. ALL EQUIPMENT/DEVICES INSTALLED ON EXTERIOR WALLS OF THE HEADWORKS ROOM TO BE INSTALLED 3'-0" MINIMUM FROM ANY OPENINGS (DOORS, LOUVERS, ETC.). FINAL REQUIREMENTS TO BE IN COMPLIANCE WITH THE LATEST EDITION OF NFPA 820.

SHEET KEY NOTES:

1. AREA IS A CLASS I, DIVISION II, GROUP D SPACE. ALL WIRING METHODS TO COMPLY WITH NEC ARTICLE 501. ALL ELECTRICAL EQUIPMENT AND DEVICES INTERIOR TO THIS AREA ARE TO BE EXPLOSION PROOF RATED FOR USE IN A CLASS I, DIVISION II, GROUP D ENVIRONMENT. ALL RACEWAY AND BOXES TO BE PVC COATED RGS BY PLASTI-BOND, OR APPROVED EQUAL. ALL MOUNTING HARDWARE, BRACKETS, SUPPORTS, CHANNELS, FITTINGS, CLAMPS, ETC... TO BE A CORROSION RESISTANT PRODUCT LINE AS MANUFACTURED BY POWER-STRUT DEFENDER, OR APPROVED EQUAL. SUBMIT PRODUCT DATA TO ENGINEER DURING SUBMITTAL PHASE FOR APPROVAL. REFER TO RACEWAY SCHEDULE FOR ADDITIONAL INFORMATION/REQUIREMENTS.
2. ROUTING & ATTACHMENT METHODS OF ALL CONDUITS TO BE CLOSELY COORDINATED WITH APPLICABLE TRADE CONTRACTOR & OWNER PRIOR TO ROUGH-IN AND VERIFIED IN FIELD TO AVOID POTENTIAL CONFLICTS WITH PROPOSED EQUIPMENT, DUCT WORK, AND PIPING SYSTEMS.
3. CONTRACTOR TO PROVIDE 3/4"Ø x 10' COPPER GROUND ROD. BOND ALL METAL STRUCTURES, EQUIPMENT, AND LIGHTING PROTECTION DOWN CONDUCTOR TO GROUND ROD USING #2 COPPER CONDUCTOR WITHIN RGS CONDUIT. REFER TO 'TYPICAL LIGHTNING PROTECTION GROUNDING DETAIL' AND 'TYPICAL PANEL GROUNDING DETAIL' FOR ADDITIONAL INFORMATION/REQUIREMENTS.
4. LIGHTNING PROTECTION DOWN CONDUCTOR. CONCEAL IN RGS CONDUIT AND ATTACH TO EXTERIOR WALL. CONTRACTOR TO WORK WITH CERTIFIED LIGHTNING PROTECTION INSTALLER TO PROVIDE COMPLETE BUILDING LIGHTNING PROTECTION SYSTEM IN ACCORDANCE WITH NFPA. UPON COMPLETION PROVIDE UL MASTER LABEL. REFER TO LIGHTNING PROTECTION FOR STRUCTURES SPECIFICATIONS FOR REQUIREMENTS AND ADDITIONAL INFORMATION.
5. CONTRACTOR TO PROVIDE WALL MOUNT BRACKETS FOR INSTALLATION OF TRANSFORMER ON WALL ABOVE PANEL.
6. GAS DETECTION SYSTEM MONITORING ALARM HORN/STROBES. INSTALL DEVICES (HORN/STROBES) AT 8'-0" ABOVE FINISHED FLOOR/GRADE. TYPICAL OF SIX (6). REFER TO SPECIFICATIONS AND RISER DIAGRAM FOR ADDITIONAL INFORMATION/REQUIREMENTS.
7. GAS DETECTION SYSTEM SENSORS AND TRANSMITTERS. INSTALL SENSORS PER MANUFACTURER'S RECOMMENDATIONS. INSTALL TRANSMITTERS AT 48" A.F.F. ON CENTER. REFER TO RISER DIAGRAM AND SPECIFICATIONS FOR ADDITIONAL INFORMATION/REQUIREMENTS.
8. CONTRACTOR TO PROVIDE 20 AMP, 125 VOLT RECEPTACLE (NEMA 5-20R) SUITABLE FOR USE IN A CLASS I DIVISION I GROUP D SPACE. PROVIDE AS CATALOG # ENR21201 M4 AS MANUFACTURED BY CROUSE-HINDS OR APPROVED EQUAL. IN ADDITION, CONTRACTOR TO PROVIDE CORRESPONDING PLUG CATALOG # ENPS201 AS MANUFACTURED BY CROUSE-HINDS, OR APPROVED EQUAL. TURN PLUG OVER TO OWNER. MOUNT RECEPTACLE AT 36" A.F.F.
9. CONTRACTOR TO PROVIDE AS WATTSTOPPER RT-200 ASTRONOMICAL TIME SWITCH OR APPROVED EQUAL WITHIN NEMA 1 ENCLOSURE. SWITCH TO CONTROL PROPOSED EXTERIOR WALL MOUNTED LIGHT FIXTURES TYPES 'WP1' & 'WP1E'. PROGRAM TIME SWITCH FOR LIGHTING 'ON' AT ASTRONOMICAL SUNSET AND 'OFF' AT ASTRONOMICAL SUNRISE. FINAL ON/OFF PROGRAMMING PARAMETERS TO BE COORDINATED WITH THE OWNER.
10. CONTRACTOR TO PROVIDE ONE (1) 120V, 20A PHOTO CONTROL WITH ADJUSTABLE SHIELD FOR CONTROL OF EXTERIOR LIGHTING CIRCUIT. INTERLOCK WITH ASTRONOMICAL TIME SWITCH. CONFIRM FINAL LOCATION WITH THE OWNER PRIOR TO ROUGH-IN. INSTALL PER MANUFACTURER'S RECOMMENDATIONS.
11. EXTERIOR 4" DUCTILE DISCHARGE AND EXTERIOR 1-1/2" POTABLE FLUSH WATER BETWEEN THE BUILDING AND GRIT CHAMBER TO HAVE HEAT TRACE SYSTEM APPLIED. PROVIDE HEAT TRACING CABLES, INSULATION, AND JACKET. REFER TO SPECIFICATIONS FOR ADDITIONAL INFORMATION/REQUIREMENTS. THIS CONTRACT RESPONSIBLE FOR ALL HEATING CABLES, PIPE INSULATION/JACKET, AND ANCILLARY EQUIPMENT AS SHOWN/SPECIFIED FOR AN OVERALL COMPLETE AND OPERABLE HEAT TRACE SYSTEM. PROVIDE 30A, 208V/1P DEDICATED CIRCUIT (2)#10 & #10G, 3/4"C) FROM PANEL 'LVP3' AS SHOWN ON PANEL SCHEDULE. NOTE, THE PIPING WILL BE PROVIDED/INSTALLED BY APPLICABLE CONTRACTOR. COORDINATE ALL EFFORTS AND FINAL REQUIREMENTS CLOSELY WITH APPLICABLE CONTRACTOR, OWNER, AND ENGINEER.
12. GROUND RING. GROUND RING TO BE BURIED AT MINIMUM 3 FEET BELOW FINISHED GRADE. GROUND RING TO BE KEPT AT MINIMUM OF 3 FEET AWAY FROM BUILDING AT ALL TIMES. PROVIDE AND INSTALL 3/4"Ø x 10' GROUND RODS AT EACH CORNER OF GROUND RING FOR A TOTAL OF FOUR (4) GROUND RODS. ALL GROUND CONDUCTORS SHALL BE #2 COPPER, U.O.N.
13. CONTRACTOR TO INSTALL END OF BEACON LIGHT ASSOCIATED WITH HEAT TRACE SYSTEM ON BUILDING EXTERIOR WALL (VISIBLE TO OWNER). COORDINATE FINAL LOCATIONS IN FIELD WITH THE OWNER (PRIOR TO ROUGH-IN) AND PROVIDE ALL NECESSARY STAINLESS STEEL MOUNTING HARDWARE, BRACKETS, ACCESSORIES, ETC... REFER TO SPECIFICATIONS FOR ADDITIONAL INFORMATION/REQUIREMENTS. TYPICAL OF FOUR (4).
14. PANEL TO BE RELOCATED TO ELECTRICAL ROOM BY THIS CONTRACT. DISCONNECT ELECTRICAL PANEL, MAKE ELECTRICALLY SAFE AND REMOVE ALL CIRCUITRY (CONDUIT & CONDUCTORS) BACK TO SOURCE.
15. CONTRACTOR TO DISCONNECT & REMOVE LIGHT FIXTURE IN ITS ENTIRETY. REMOVE CONDUIT AND CONDUCTORS BACK TO SOURCE. CONTRACTOR TO FIELD VERIFY.
16. CONTRACTOR TO DISCONNECT & REMOVE RECEPTACLE IN ITS ENTIRETY. REMOVE CONDUIT AND CONDUCTORS BACK TO SOURCE. CONTRACTOR TO FIELD VERIFY.
17. CONTRACTOR TO PROVIDE HAND-OFF-AUTO (H-O-A) SWITCH FOR CONTROL OF EXHAUST FAN 'EF-201' AND LOUVERS 'LV-202', 'LV-203'. IN HAND MODE FAN IS TO BE ON. IN OFF MODE FAN IS TO BE OFF. IN AUTO MODE FAN IS TO OPERATE VIA REVERSE ACTING THERMOSTAT. CONTRACTOR IS RESPONSIBLE FOR PROVIDING ALL NECESSARY INTERLOCK CIRCUITRY. PROVIDE CONTROL POWER TRANSFORMER AND ENCLOSURE AS REQUIRED TO OBTAIN NECESSARY VOLTAGE FOR THERMOSTAT. REFER TO HVAC DRAWINGS AND COORDINATE WITH APPLICABLE TRADE CONTRACTORS FOR THERMOSTAT LOCATIONS AND FINAL REQUIREMENTS. REFER TO VENTILATION SYSTEM INTERLOCK DETAIL FOR ADDITIONAL INFORMATION.

MHE ENGINEERING
33 Airport Center Drive, Suite 202
New Windsor, NY 12553
(845) 567-3100
111 Wheatfield Drive, Suite 1
Milford, PA 18337
(570) 296-2765

BID ADDENDUM

JADE STONE ENGINEERING

STATE OF NEW YORK · JEFFREY E. ROBINSON · 095896 · LICENSED PROFESSIONAL ENGINEER

HAZARDOUS MATERIAL NOTE:

THE SERVICES PROVIDED BY MHE, INCLUDING ALL WORK DEPICTED ON MHE PLANS, DO NOT INCLUDE SERVICES RELATED TO THE IDENTIFICATION, CONTROLS OR HANDLING OF HAZARDOUS MATERIALS, INCLUDING SUCH MATERIALS AS ASBESTOS AND LEAD PAINT. ALL TESTING, IDENTIFICATION, ABATEMENT, CONTROLS, AND HANDLING OF HAZARDOUS MATERIALS SHALL BE UNDERTAKEN BY A HAZARDOUS MATERIAL CONSULTANT AND CERTIFIED PROFESSIONALS. IF SUCH MATERIALS HAVE BEEN IDENTIFIED, CONTRACTOR WILL COMMUNICATE DIRECTLY WITH HAZARDOUS MATERIAL PROFESSIONAL FOR THE PERFORMANCE OF ANY WORK ON OR ADJACENT TO SAID MATERIALS. IF UNIDENTIFIED MATERIALS OF CONCERN ARE ENCOUNTERED WHILE UNDERTAKING THE WORK SHOWN HEREON, CONTRACTOR SHALL IMMEDIATELY NOTIFY ENGINEER AND OWNER, AND SHALL OBTAIN DIRECTION FROM THE HAZARDOUS MATERIAL CONSULTANT PRIOR TO THE CONTINUATION OF WORK INVOLVING SUSPECTED MATERIAL.

UDIG·NY SAFE DIGGING STARTS HERE
CALL 811

UNAUTHORIZED ADDITION OR ALTERATION OF THIS PLAN IS A VIOLATION OF SECTION 7209(2) OF THE NEW YORK STATE EDUCATION LAW.

ALL PRODUCTION & INTELLECTUAL PROPERTY RIGHT RESERVED ©

CAESARS LANE WWTP EXPANSION PROJECT: PHASE 2
145 CAESARS LN.
NEW WINDSOR, NY 12553
FOR TOWN OF NEW WINDSOR
555 UNION AVE.
NEW WINDSOR, NY 12553

ELECTRICAL FLOOR PLANS - HEADWORKS BUILDING

REVISIONS

NO.	DESCRIPTION	DATE

ISSUED DATE:	06 JUNE, 2025
DESIGN BY:	RRM
DRAWN BY:	CDJ
CHECKED BY:	MGR
REVIEWED BY:	JER
SHEET NO.	E-201
PROJECT # 18-732	PHASE #

GENERAL DEMOLITION NOTES:

MECHANICAL EQUIPMENT & MISC. ELECTRICAL EQUIPMENT:
WHERE INDICATED TO BE DEMOLISHED:
- REFER TO GENERAL CONTRACT DRAWINGS FOR AN ACCURATE DEPICTION OF ALL DEMOLITION REQUIRED AS PART OF THIS CONTRACT.
- REMOVE ALL WIRE (POWER & CONTROLS) & EXPOSED CONDUIT BACK TO SOURCE PANEL, UNLESS OTHERWISE INDICATED (UOI).
- REMOVE ANY ASSOCIATED MOTOR STARTERS, CONTROL STATIONS, &/OR DISCONNECTS, UOI.
- REMOVE CIRCUIT WIRING FROM SOURCE PANEL AND REMOVE ASSOCIATED SOURCE CIRCUIT BREAKER, UOI.
- REMOVE ALL INTERLOCK CIRCUITRY, UOI.
- PROVIDE REVISED TYPED PANELBOARD DIRECTORIES FOR ALL EXISTING TO REMAIN PANELS WHERE CIRCUITS ARE TO BE REMOVED.
- REMOVE ALL ASSOCIATED MOUNTING HARDWARE, BRACKETS, AND EQUIPMENT, UOI.

RECEPTACLES:
WHERE INDICATED TO BE DEMOLISHED:
- REMOVE ALL RECEPTACLES IMPACTED BY WALL MODIFICATIONS AND OVERALL PROJECT IMPROVEMENTS. **NOTE** ALL EXISTING RECEPTACLES MAY NOT BE SHOWN ON THESE DEMOLITION PLANS. MINOR FIELD VERIFICATION REQUIRED.
- REMOVE DEVICE, AND ALL ASSOCIATED WIRE & CONDUIT BACK TO SOURCE OR NEAREST ACTIVE JUNCTION BOX, UOI.

LIGHTING:
WHERE INDICATED TO BE DEMOLISHED:
- REMOVE ALL FIXTURES THROUGHOUT SPACE. **NOTE** ALL EXISTING LIGHTING FIXTURES MAY NOT BE SHOWN ON THESE DEMOLITION PLANS. MINOR FIELD VERIFICATION REQUIRED.
- REMOVE ALL ASSOCIATED WIRING BACK TO SOURCE, UOI.
- REMOVE SWITCHING AND CONTROL DEVICES, UOI.
- REMOVE CONTACTORS ASSOCIATED WITH LOW VOLTAGE SWITCHING DEVICES, UOI.
- DISPOSE OF ALL LAMPS IN ACCORDANCE WITH STATE/FEDERAL AND EPA REQUIREMENTS.

PANELBOARD REMOVAL AND REPLACEMENT:
- REFER TO SINGLE LINE DIAGRAMS FOR SCOPE OF WORK.

CIRCUIT AND FEEDER REMOVAL AND REPLACEMENT:
- MAINTAIN ANY EXISTING NON-IMPACTED PANELBOARDS AND ANY NON-IMPACTED CIRCUITS WHICH ARE EXISTING TO REMAIN.
- WHERE CIRCUITS ARE AFFECTED BY MODIFICATION/REMOVAL ACTIVITIES, PROVIDE NECESSARY CIRCUIT EXTENSIONS AND ALL NECESSARY LABOR/MATERIALS AS NECESSARY TO REPAIR AND RE-CONNECT CIRCUIT(S).
- ANY CIRCUITS/FEEDERS WHICH REQUIRE SHUTDOWN TO ACCOMMODATE WORK SHALL BE COORDINATED WITH THE OWNER WELL IN ADVANCE.

BUILDING/STRUCTURE GROUND SYSTEM:
- CONTRACTOR TO CAREFULLY PROTECT AND MAINTAIN ALL GROUND SYSTEMS ASSOCIATED WITH BUILDINGS/STRUCTURES EXISTING TO REMAIN.
- CONTRACTOR TO REMOVE ALL GROUND SYSTEMS ASSOCIATED WITH BUILDING/STRUCTURES TO BE REMOVED.
- GROUND SYSTEM COMPONENTS MAY INCLUDE, BUT ARE NOT LIMITED TO, GROUNDING CONDUCTORS, JUMPERS, TERMINATIONS, RODS, AND AIR TERMINALS. CONTRACTOR TO FIELD VERIFY EXISTING CONDITIONS PRIOR TO COMMENCEMENT OF DEMOLITION.

HAZARDOUS MATERIAL REMOVAL:
PERFORM WORK FOR REMOVAL AND DISPOSAL OF EQUIPMENT AND MATERIALS CONTAINING TOXIC SUBSTANCES REGULATED UNDER THE FEDERAL TOXIC SUBSTANCES CONTROL ACT (TSCA) IN ACCORDANCE WITH APPLICABLE FEDERAL, STATE, AND LOCAL REGULATIONS. APPLICABLE EQUIPMENT AND MATERIALS INCLUDE, BUT ARE NOT LIMITED TO:
- PCB-CONTAINING ELECTRICAL EQUIPMENT, INCLUDING TRANSFORMERS, CAPACITORS, AND SWITCHES.
- PCB- AND DEHP-CONTAINING LIGHTING BALLASTS.
- MERCURY-CONTAINING LAMPS AND TUBES, INCLUDING FLUORESCENT LAMPS, HIGH INTENSITY DISCHARGE (HID), ARC LAMPS, ULTRA-VIOLET, HIGH PRESSURE SODIUM, MERCURY VAPOR, IGNITRON TUBES, NEON, AND INCANDESCENT.
- CONTRACTOR TO COORDINATE ANY REQUIRED HAZARDOUS MATERIAL REMOVAL WITH THE OWNER AND THE APPLICABLE CONTRACTOR.

GENERAL SHEET NOTES:

1. REFER TO E-001 FOR ELECTRICAL LEGENDS, ABBREVIATIONS, AND GENERAL PROJECT NOTES.
2. ITEMS INDICATED TO BE REMOVED:
2.1. REMOVE ALL CONDUCTORS AND EXPOSED CONDUIT BACK TO SOURCE (UOI).
2.2. REMOVE CIRCUIT WIRING AND CIRCUIT BREAKER FROM SOURCE PANEL (UOI).
2.3. REMOVE ALL ASSOCIATED CONTROL CONDUCTORS, CONDUITS, AND DEVICES (UOI).
2.4. REMOVE ASSOCIATED STARTERS, DISCONNECTS, AND ASSOCIATED CIRCUITRY (UOI).
2.5. REMOVE EQUIPMENT PADS & MOUNTING HARDWARE, BRACKETS, ACCESSORIES, ETC... (UOI).
2.6. REVISE PANELBOARD AND MOTOR CONTROL CENTER DIRECTORIES/NAME PLATES AS CHANGES OCCUR (UOI).
3. THESE DEMOLITION DRAWINGS ARE SCHEMATIC IN NATURE AND ARE BASED ON CURSORY FIELD OBSERVATION AND EXISTING DRAWINGS. IT IS NOT THE INTENTION OF THESE DRAWINGS TO INDICATE EVERY DEVICE/FIXTURE REQUIRING REMOVAL/DEMO RATHER GENERAL SYSTEMS WHICH ARE TO BE REMOVED.
4. CIRCUITS NOT IN AREA OF WORK THAT ARE AFFECTED BY WORK SHALL BE OPERATIONAL DURING PROJECT. PROVIDE TEMPORARY CIRCUITS AS NECESSARY.
5. CIRCUIT, EQUIPMENT, AND DEVICE REMOVAL SHALL NOT AFFECT THE INTEGRITY OR FUNCTIONALITY OF CIRCUITS TO REMAIN. ALL CIRCUITS TO REMAIN SHALL BE MAINTAINED. PROVIDE ALL NECESSARY CIRCUIT MODIFICATIONS AND EXTENSIONS.
6. WHERE REMOVALS LEAVE HOLES AND DAMAGED SURFACES EXPOSED IN THE FINISHED WORK, PATCH AND REPAIR THESE HOLES AND DAMAGED SURFACES TO MATCH ADJACENT FINISHED SURFACES. WHERE NEW WORK IS TO BE APPLIED TO EXISTING SURFACES, PERFORM REMOVALS, AND PATCHING IN A MANNER TO PRODUCE SURFACES SUITABLE FOR RECEIVING NEW WORK. COORDINATE ALL WORK WITH THE APPLICABLE CONTRACTOR, OWNER, AND ENGINEER.
7. COORDINATE WITH ALL CONTRACT DRAWINGS AND TRADE CONTRACTORS FOR ADDITIONAL EQUIPMENT THAT IS TO BE DEMOLISHED. FOR ALL EQUIPMENT SHOWN/INDICATED FOR REMOVAL, DISCONNECT AND REMOVE ELECTRICAL CIRCUIT INCLUDING CONDUCTORS AND CONDUIT BACK TO SOURCE.
8. NOT ALL EQUIPMENT/DEVICES ARE SHOWN FOR CLARITY. CONTRACTOR SHALL FIELD VERIFY ALL EXISTING CONDITIONS AND REPORT DISCREPANCIES TO ENGINEER PRIOR TO COMMENCEMENT OF DEMOLITION.
9. REFER TO THE ELECTRICAL SINGLE LINE DIAGRAMS, SCHEDULES & DETAILS FOR ADDITIONAL DEMOLITION INFORMATION/REQUIREMENTS.
10. COORDINATE ALL ASPECTS OF SEQUENCE OF REMOVAL WITH THE OWNER, ENGINEER, AND APPLICABLE TRADE CONTRACTOR. REFER TO SPECIFICATIONS AND DEMOLITION SINGLE LINE DIAGRAM FOR ADDITIONAL INFORMATION.
11. WHERE REMOVAL OF CONDUIT SYSTEM IS NOT FEASIBLE, REMOVE ALL CONDUCTORS FROM CONDUIT SYSTEM, CUT FLUSH, CAP CONDUIT SYSTEM, AND ABANDON IN PLACE. FEASIBLE IS DEFINED AS BEING LOCATED WITHIN A CONCRETE DUCT BANK OR CONCRETE SLAB. ALL OTHER INSTANCES TO HAVE THE CONDUIT & CIRCUITRY TO BE REMOVED IN THERE ENTIRETY. FIELD VERIFY AND COORDINATE FINAL REQUIREMENTS WITH THE OWNER, TYPICAL.

GENERAL NEW WORK NOTES:

1. REFER TO E-001 FOR ELECTRICAL LEGENDS, ABBREVIATIONS AND GENERAL PROJECT NOTES.
2. PROVIDE A DEDICATED GROUNDING CONDUCTOR FOR ALL ELECTRICAL EQUIPMENT AND ASSOCIATED EQUIPMENT/DEVICES.
3. EQUIPMENT & DEVICE LOCATIONS ARE SHOWN AS GENERAL IN NATURE. REFER TO ALL TRADE CONTRACT DRAWINGS AND COORDINATE WITH ALL TRADE CONTRACTORS FOR EXACT LOCATIONS. CLOSE CONTRACTOR COORDINATION REQUIRED.
4. ALL PROPOSED EQUIPMENT LOCATIONS/INSTALLATIONS TO COMPLY WITH NEC ARTICLE 110.26 'SPACES ABOUT ELECTRICAL EQUIPMENT'.
5. CONTRACTOR TO PROVIDE ALL REQUIRED MOUNTING HARDWARE, EQUIPMENT, BRACKETS, SUPPORTS, ACCESSORIES, ETC... PROVIDE AS STAINLESS STEEL IN CORROSIVE ENVIRONMENTS, EXTERIOR APPLICATIONS, OR WHERE INDICATED ON THE CONTRACT DRAWINGS.
6. NOT ALL EQUIPMENT/DEVICES MAY BE SHOWN FOR CLARITY. CONTRACTOR SHALL FIELD VERIFY ALL EXISTING AND PROPOSED CONDITIONS PRIOR TO COMMENCEMENT OF CONSTRUCTION. COORDINATE WITH THE APPLICABLE CONTRACTOR, OWNER, AND ENGINEER.
7. CONTRACTOR RESPONSIBLE FOR MOUNTING OF THE APPLICABLE CONTRACTOR FURNISHED PANELS. COORDINATE WITH THE APPLICABLE CONTRACTOR AND PROVIDE ALL NECESSARY MOUNTING HARDWARE/EQUIPMENT.
8. CONTRACTOR TO COORDINATE ALL ASPECTS OF SEQUENCE OF CONSTRUCTION WITH THE OWNER AND THE APPLICABLE CONTRACTOR.
9. CONTRACTOR TO ADJUST FINAL INTERIOR LIGHT FIXTURE LOCATIONS TO AVOID CONFLICTS WITH EQUIPMENT, PIPING SYSTEMS, AND DUCTWORK. COORDINATE WITH ALL TRADES.
10. CONTRACTOR TO ADJUST FINAL AIMING ANGLE OF EXTERIOR LIGHT FIXTURES TO LIGHT DESIRED AREAS AND MINIMIZE LIGHT POLLUTION. COORDINATE WITH THE OWNER. REFER TO THE LUMINAIRE SCHEDULE FOR ADDITIONAL INFORMATION/REQUIREMENTS.
11. ALL WEATHERPROOF RECEPTACLES TO BE INSTALLED AT A HEIGHT OF 36" A.F.G.
12. CONTRACTOR TO COORDINATE ALL CONDUIT PENETRATIONS AND CONDUIT ROUTING WITH THE APPLICABLE CONTRACTOR, OWNER, AND ENGINEER. PRIOR TO ROUGH-IN.
13. REFER TO ELECTRICAL SINGLE LINE DIAGRAMS, SPECIFICATIONS, RISER DIAGRAMS, SCHEDULES & DETAILS FOR ADDITIONAL INFORMATION/REQUIREMENTS.
14. CONTRACTOR TO PROVIDE LABEL FOR ALL PROPOSED ELECTRICAL EQUIPMENT AND DEVICES. COORDINATE FINAL LABELING REQUIREMENTS WITH THE OWNER. REFER TO SPECIFICATION SECTION 26 0553 - IDENTIFICATION FOR ELECTRICAL SYSTEMS FOR ADDITIONAL INFORMATION/REQUIREMENTS.
15. ALL EQUIPMENT/DEVICES INSTALLED ON EXTERIOR WALLS OF CLASSIFIED SPACES TO BE INSTALLED 3'-0" MINIMUM FROM ANY OPENINGS (DOORS, LOUVERS, ETC.). FINAL REQUIREMENTS TO BE IN COMPLIANCE WITH THE LATEST EDITION OF NFPA 820.

SHEET KEY NOTES:

1. CONTRACTOR TO PROVIDE COMPLETE ELECTRICAL DEMOLITION FOR THIS AREA (UNLESS OTHERWISE INDICATED). REMOVE THE FOLLOWING DEVICES INCLUDING BUT NOT LIMITED TO; ALL ELECTRICAL DISTRIBUTION EQUIPMENT, CONTROLLERS, CONTROL PANELS, DISCONNECTS, MOTOR STARTERS, RECEPTACLES, INTERIOR/EXTERIOR LIGHTING, JUNCTION BOXES, BONDING/GROUNDING EQUIPMENT, ELECTRIC VALVES, MOTORS (DISCONNECT & REMOVE BRANCH CIRCUITRY), AND INSTRUMENTATION/CONTROLS. REMOVE ALL ASSOCIATED CIRCUITRY (CONDUIT & CONDUCTORS) BACK TO SOURCE. COORDINATE REMOVAL EFFORTS CLOSELY WITH THE APPLICABLE CONTRACTOR, OWNER, AND ENGINEER.
2. CONTRACTOR TO CLOSELY COORDINATE THE REMOVAL EFFORTS OF ALL PLANT PROCESS EQUIPMENT/DEVICES SCHEDULED FOR REMOVAL WITH THE APPLICABLE CONTRACTOR, OWNER, AND ENGINEER.
3. CONTRACTOR TO CLOSELY COORDINATE THE REMOVAL EFFORTS OF ALL HVAC EQUIPMENT SCHEDULED FOR REMOVAL WITH THE APPLICABLE CONTRACTOR, OWNER, AND ENGINEER.
4. CONTRACTOR TO CLOSELY COORDINATE THE REMOVAL EFFORTS OF ALL PLUMBING EQUIPMENT SCHEDULED FOR REMOVAL WITH THE APPLICABLE CONTRACTOR, OWNER, AND ENGINEER.
5. CONTRACTOR TO DISCONNECT & REMOVE ALL EXISTING LIGHT FIXTURES, LIGHT SWITCHES, LIGHTING CONTROL DEVICES, MOUNTING HARDWARE, AND ASSOCIATED COMPONENTS IN THEIR ENTIRETY. REMOVE CIRCUITRY (CONDUIT & CONDUCTORS) BACK TO SOURCE. CONTRACTOR TO FIELD VERIFY.
6. CONTRACTOR TO PROVIDE TEMPORARY LIGHTING INCLUDING ALL CIRCUITING AND CONTROLS FOR A COMPLETE AND OPERABLE TEMPORARY LIGHTING SYSTEM THROUGHOUT THE DURATION OF PROJECT. CONTRACTOR TO COORDINATE FINAL TEMPORARY LIGHTING REQUIREMENTS WITH THE OWNER AND PROVIDE AS NECESSARY. TEMPORARY LIGHTING SYSTEMS TO BE PROVIDED FOR ALL AREAS IN WHICH THE EXISTING LIGHTING SYSTEMS ARE DISTURBED AS PART OF THIS PROJECT.
7. NOTE, CONTRACTOR TO ENSURE ALL ELECTRICAL BRANCH CIRCUITS AND CONDUITS ARE REMOVED IN THIS AREA ASSOCIATED WITH EQUIPMENT SCHEDULED FOR REMOVAL, TO AVOID CONFLICT WITH PROPOSED EQUIPMENT, DUCT WORK, AND PIPING SYSTEMS. COORDINATE ALL EFFORTS CLOSELY WITH THE APPLICABLE CONTRACTOR, OWNER, AND ENGINEER.
8. JUNCTION BOX IS TO BE REMOVED. NOTE, ALL BOXES AND RACEWAY SYSTEMS ASSOCIATED WITH EQUIPMENT SCHEDULED FOR REMOVAL ARE TO BE REMOVED IN THEIR ENTIRETY.
9. EXTERIOR 4" DUCTILE DISCHARGE AND EXTERIOR 1-1/2" POTABLE FLUSH WATER BETWEEN THE BUILDING AND GRIT CHAMBER TO HAVE HEAT TRACE SYSTEM APPLIED. PROVIDE HEAT TRACING CABLES, INSULATION, AND JACKET. REFER TO SPECIFICATIONS FOR ADDITIONAL INFORMATION/REQUIREMENTS. THIS CONTRACT RESPONSIBLE FOR ALL HEATING CABLES, PIPE INSULATION/JACKET, AND ANCILLARY EQUIPMENT AS SHOWN/SPECIFIED FOR AN OVERALL COMPLETE AND OPERABLE HEAT TRACE SYSTEM. PROVIDE 30A, 208V/1P DEDICATED CIRCUIT ((2)#10 & #10G, 3/4"C) FROM PANEL 'LVP3' AS SHOWN ON PANEL SCHEDULE. NOTE, THE PIPING WILL BE PROVIDED/INSTALLED BY APPLICABLE CONTRACTOR. COORDINATE ALL EFFORTS AND FINAL REQUIREMENTS CLOSELY WITH APPLICABLE CONTRACTOR, OWNER, AND ENGINEER.
10. AREA IS A CLASS I, DIVISION II, GROUP D SPACE. ALL WIRING METHODS TO COMPLY WITH NEC ARTICLE 501. ALL ELECTRICAL EQUIPMENT AND DEVICES INTERIOR TO THIS AREA ARE TO BE EXPLOSION PROOF RATED FOR USE IN A CLASS I, DIVISION II, GROUP D ENVIRONMENT. ALL RACEWAY AND BOXES TO BE PVC COATED RGS BY PLASTI-BOND, OR APPROVED EQUAL. ALL MOUNTING HARDWARE, BRACKETS, SUPPORTS, CHANNELS, FITTINGS, CLAMPS, ETC... TO BE A CORROSION RESISTANT PRODUCT LINE AS MANUFACTURED BY POWER-STRUT DEFENDER, OR APPROVED EQUAL. SUBMIT PRODUCT DATA TO ENGINEER DURING SUBMITTAL PHASE FOR APPROVAL. REFER TO RACEWAY SCHEDULE FOR ADDITIONAL INFORMATION/REQUIREMENTS.
11. ROUTING & ATTACHMENT METHODS OF ALL CONDUITS TO BE CLOSELY COORDINATED WITH OWNER, ENGINEER, AND ALL TRADE CONTRACTORS PRIOR TO ROUGH-IN AND VERIFIED IN FIELD TO AVOID POTENTIAL CONFLICTS WITH PROPOSED EQUIPMENT, DUCT WORK, AND PIPING SYSTEMS.
12. CONTRACTOR TO PROVIDE 3/4"Ø x 10' COPPER GROUND ROD. BOND ALL METAL STRUCTURES (GRATING, LADDERS, HANDRAILS, STAIRS, ETC...) TO GROUND ROD USING #2 COPPER CONDUCTOR WITHIN RGS CONDUIT.

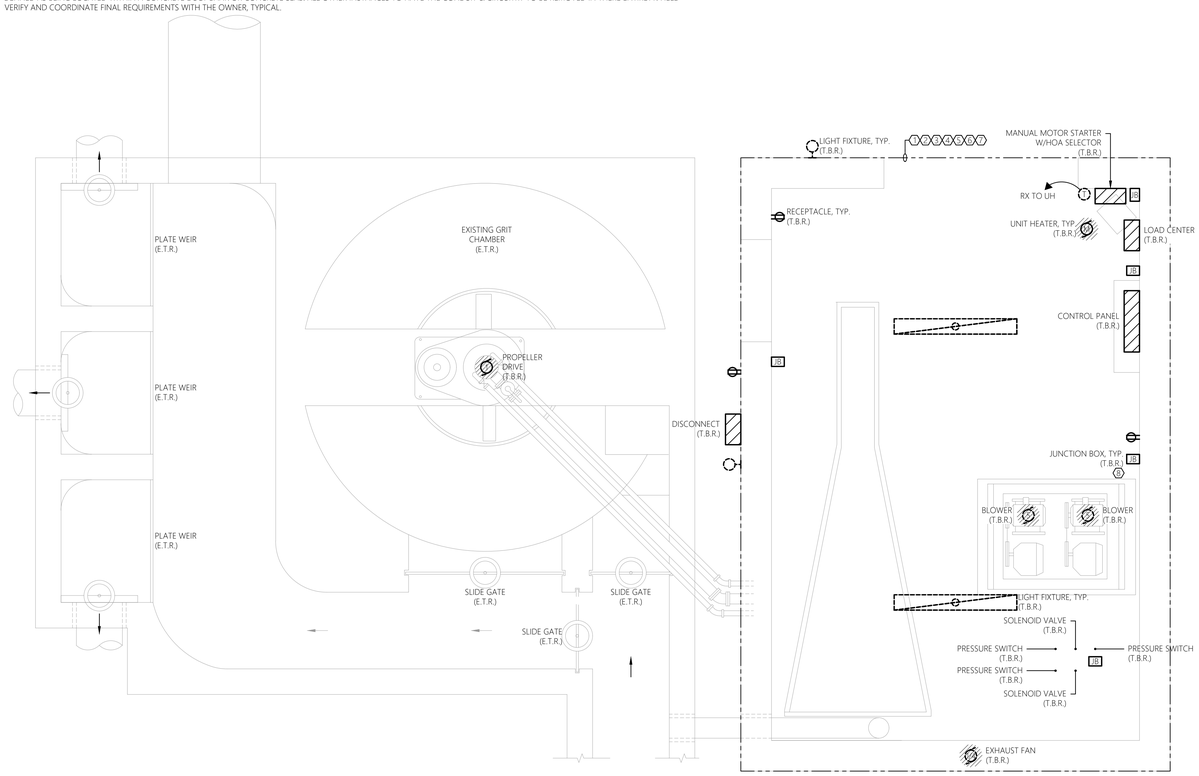

0' 1' 2' 4'
SCALE: 1/2" = 1'-0"

1 ELECTRICAL DEMOLITION PLAN
E-202 SCALE: 1/2" = 1'-0" GRIT SYSTEM

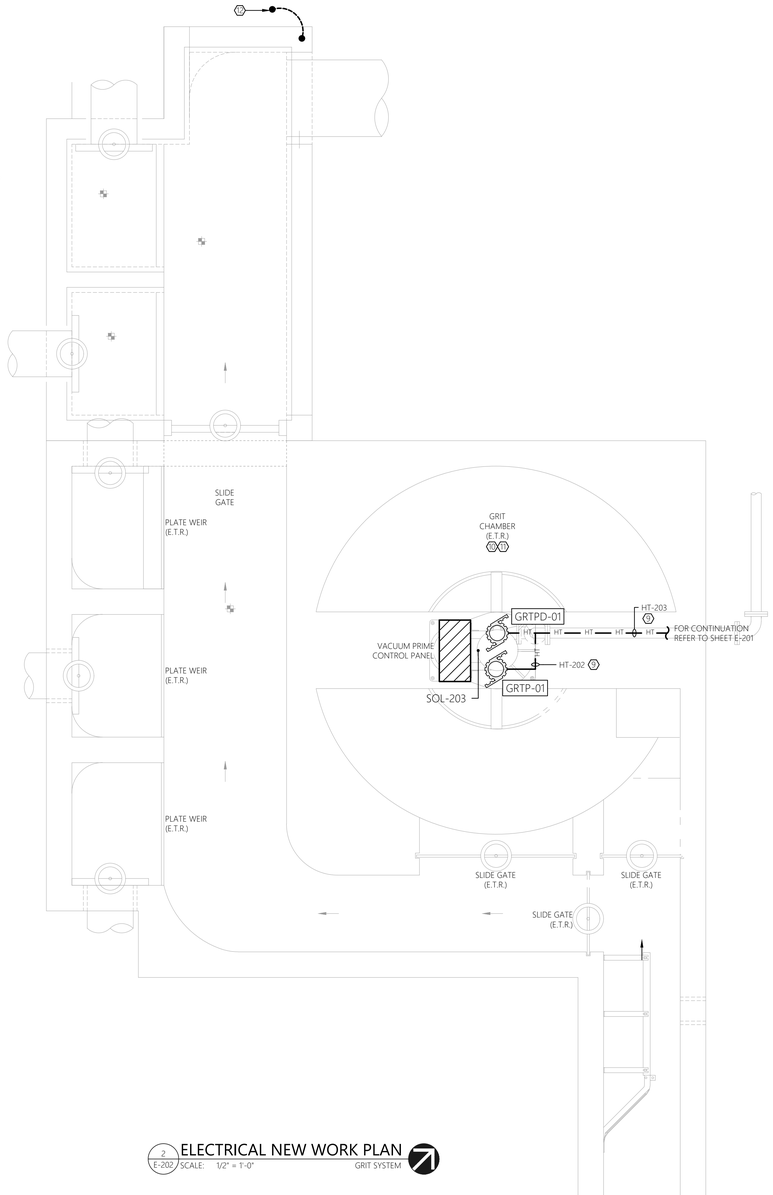

2 ELECTRICAL NEW WORK PLAN
E-202 SCALE: 1/2" = 1'-0" GRIT SYSTEM

MHE ENGINEERING
33 Airport Center Drive, Suite 202
New Windsor, NY 12553
(845) 567-3100
111 Wheatfield Drive, Suite 1
Milford, PA 18337
(570) 296-2765

BID ADDENDUM

JADE STONE ENGINEERING

STATE OF NEW YORK · JEFFREY E. ROBINSON · 095896 · LICENSED PROFESSIONAL ENGINEER

HAZARDOUS MATERIAL NOTE:
THE SERVICES PROVIDED BY MHE, INCLUDING ALL WORK DEPICTED ON MHE PLANS, DO NOT INCLUDE SERVICES RELATED TO THE IDENTIFICATION, CONTROLS OR HANDLING OF HAZARDOUS MATERIALS, INCLUDING SUCH MATERIALS AS ASBESTOS AND LEAD PAINT. ALL TESTING, IDENTIFICATION, ABATEMENT, CONTROLS, AND HANDLING OF HAZARDOUS MATERIALS SHALL BE UNDERTAKEN BY A HAZARDOUS MATERIAL CONSULTANT AND CERTIFIED PROFESSIONALS. IF SUCH MATERIALS HAVE BEEN IDENTIFIED, CONTRACTOR WILL COMMUNICATE DIRECTLY WITH HAZARDOUS MATERIAL PROFESSIONAL FOR THE PERFORMANCE OF ANY WORK ON OR ADJACENT TO SAID MATERIALS. IF UNIDENTIFIED MATERIALS OF CONCERN ARE ENCOUNTERED WHILE UNDERTAKING THE WORK SHOWN HEREON, CONTRACTOR SHALL IMMEDIATELY NOTIFY ENGINEER AND OWNER, AND SHALL OBTAIN DIRECTION FROM THE HAZARDOUS MATERIAL CONSULTANT PRIOR TO THE CONTINUATION OF WORK INVOLVING SUSPECTED MATERIAL.

UDIG·NY SAFE DIGGING STARTS HERE
CALL 811

UNAUTHORIZED ADDITION OR ALTERATION OF THIS PLAN IS A VIOLATION OF SECTION 7209(2) OF THE NEW YORK STATE EDUCATION LAW.

ALL PRODUCTION & INTELLECTUAL PROPERTY RIGHT RESERVED ©

CAESARS LANE WWTP EXPANSION PROJECT: PHASE 2
145 CAESARS LN.
NEW WINDSOR, NY 12553
FOR TOWN OF NEW WINDSOR
555 UNION AVE.
NEW WINDSOR, NY 12553

ELECTRICAL FLOOR PLANS - GRIT SYSTEM

REVISIONS

NO.	DESCRIPTION	DATE

ISSUED DATE:	06 JUNE, 2025
DESIGN BY:	RRM
DRAWN BY:	CDJ
CHECKED BY:	MGR
REVIEWED BY:	JER

SHEET NO.
E-202

PROJECT # 18-732 PHASE #

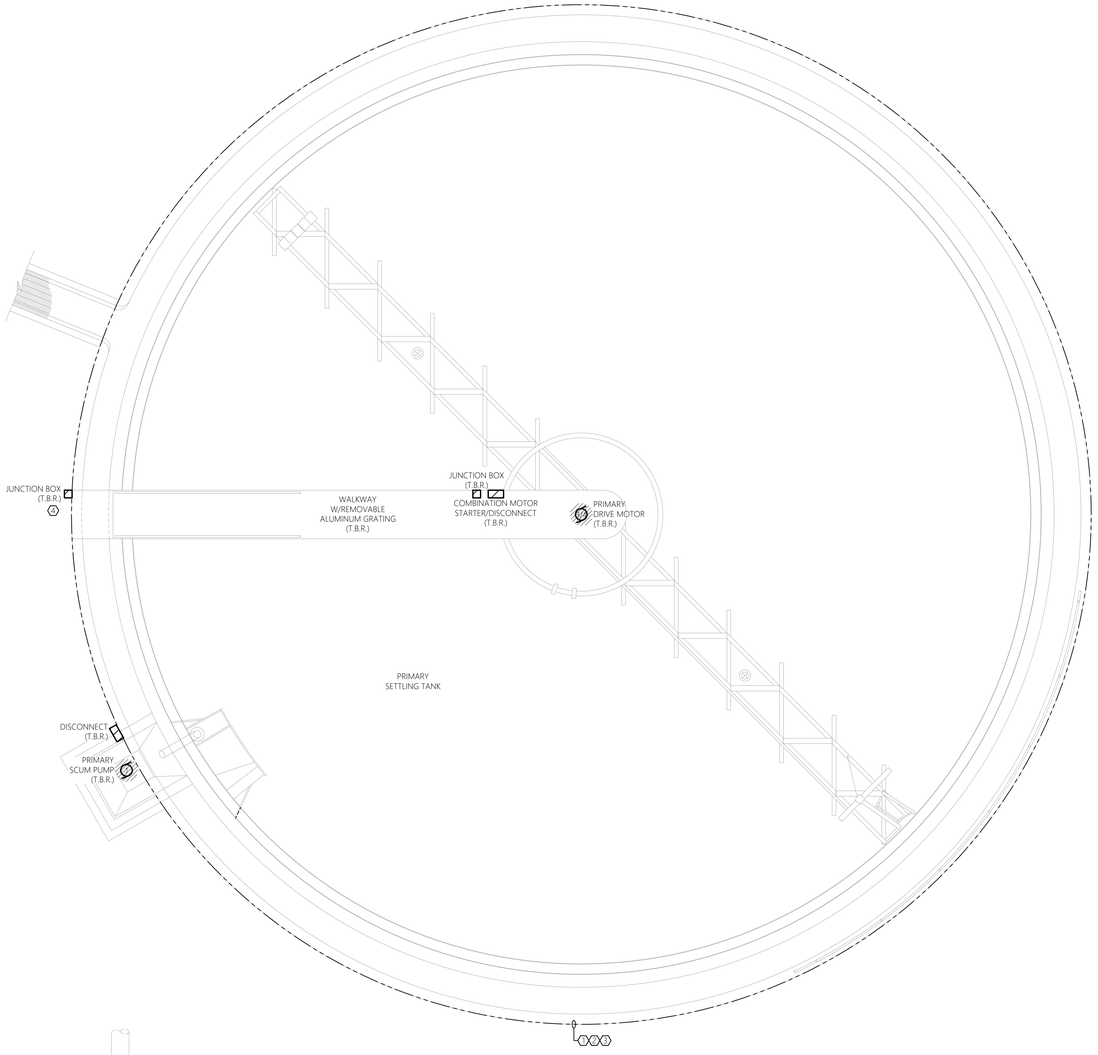

1 E-300 ELECTRICAL DEMOLITION PLAN
SCALE: 1/4" = 1'-0" PRIMARY SETTLING TANK #1, #2, AND #3

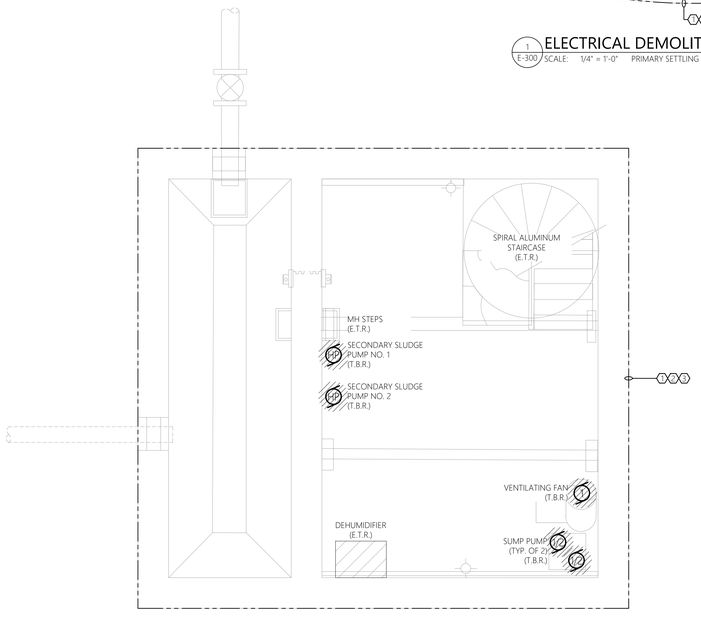

2 E-300 ELECTRICAL DEMOLITION PLAN
SCALE: 1/2" = 1'-0" PRIMARY SLUDGE PIT

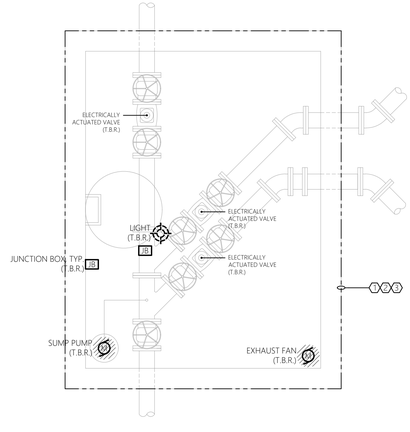

3 E-300 ELECTRICAL DEMOLITION PLAN
SCALE: 1/2" = 1'-0" PRIMARY VALVE PIT

SCALE: 1/2" = 1'-0"

SCALE: 1/4" = 1'-0"

GENERAL DEMOLITION NOTES:

MECHANICAL EQUIPMENT & MISC. ELECTRICAL EQUIPMENT:
WHERE INDICATED TO BE DEMOLISHED:
- REFER TO GENERAL CONTRACT DRAWINGS FOR AN ACCURATE DEPICTION OF ALL DEMOLITION REQUIRED AS PART OF THIS CONTRACT.
- REMOVE ALL WIRE (POWER & CONTROLS) & EXPOSED CONDUIT BACK TO SOURCE PANEL, UNLESS OTHERWISE INDICATED, UOI.
- REMOVE ANY ASSOCIATED MOTOR STARTERS, CONTROL STATIONS, &/OR DISCONNECTS, UOI.
- REMOVE CIRCUIT WIRING FROM SOURCE PANEL AND REMOVE ASSOCIATED SOURCE CIRCUIT BREAKER, UOI.
- REMOVE ALL INTERLOCK CIRCUITRY, UOI.
- PROVIDE REVISED TYPED PANELBOARD DIRECTORIES FOR ALL EXISTING TO REMAIN PANELS WHERE CIRCUITS ARE TO BE REMOVED.
- REMOVE ALL ASSOCIATED MOUNTING HARDWARE, BRACKETS, AND EQUIPMENT, UOI.

RECEPTACLES:
WHERE INDICATED TO BE DEMOLISHED:
- REMOVE ALL RECEPTACLES IMPACTED BY WALL MODIFICATIONS AND OVERALL PROJECT IMPROVEMENTS. **NOTE** ALL EXISTING RECEPTACLES MAY NOT BE SHOWN ON THESE DEMOLITION PLANS. MINOR FIELD VERIFICATION REQUIRED.
- REMOVE DEVICE, AND ALL ASSOCIATED WIRE & CONDUIT BACK TO SOURCE OR NEAREST ACTIVE JUNCTION BOX, UOI.

LIGHTING:
WHERE INDICATED TO BE DEMOLISHED:
- REMOVE ALL FIXTURES THROUGHOUT SPACE. **NOTE** ALL EXISTING LIGHTING FIXTURES MAY NOT BE SHOWN ON THESE DEMOLITION PLANS. MINOR FIELD VERIFICATION REQUIRED.
- REMOVE ALL ASSOCIATED WIRING BACK TO SOURCE, UOI.
- REMOVE SWITCHING AND CONTROL DEVICES, UOI.
- REMOVE CONTACTORS ASSOCIATED WITH LOW VOLTAGE SWITCHING DEVICES, UOI.
- DISPOSE OF ALL LAMPS IN ACCORDANCE WITH STATE/FEDERAL AND EPA REQUIREMENTS.

PANELBOARD REMOVAL AND REPLACEMENT:
- REFER TO SINGLE LINE DIAGRAMS FOR SCOPE OF WORK.

CIRCUIT AND FEEDER REMOVAL AND REPLACEMENT:
- MAINTAIN ANY EXISTING NON-IMPACTED PANELBOARDS AND ANY NON-IMPACTED CIRCUITS WHICH ARE EXISTING TO REMAIN.
- WHERE CIRCUITS ARE AFFECTED BY MODIFICATION/REMOVAL ACTIVITIES, PROVIDE NECESSARY CIRCUIT EXTENSIONS AND ALL NECESSARY LABOR/MATERIALS AS NECESSARY TO REPAIR AND RE-CONNECT CIRCUIT(S).
- ANY CIRCUITS/FEEDERS WHICH REQUIRE SHUTDOWN TO ACCOMMODATE WORK SHALL BE COORDINATED WITH THE OWNER WELL IN ADVANCE.

BUILDING/STRUCTURE GROUND SYSTEM:
- CONTRACTOR TO CAREFULLY PROTECT AND MAINTAIN ALL GROUND SYSTEMS ASSOCIATED WITH BUILDINGS/STRUCTURES EXISTING TO REMAIN.
- CONTRACTOR TO REMOVE ALL GROUND SYSTEMS ASSOCIATED WITH BUILDING/STRUCTURES TO BE REMOVED.
- GROUND SYSTEM COMPONENTS MAY INCLUDE, BUT ARE NOT LIMITED TO, GROUNDING CONDUCTORS, JUMPERS, TERMINATIONS, RODS, AND AIR TERMINALS. CONTRACTOR TO FIELD VERIFY EXISTING CONDITIONS PRIOR TO COMMENCEMENT OF DEMOLITION.

HAZARDOUS MATERIAL REMOVAL:
PERFORM WORK FOR REMOVAL AND DISPOSAL OF EQUIPMENT AND MATERIALS CONTAINING TOXIC SUBSTANCES REGULATED UNDER THE FEDERAL TOXIC SUBSTANCES CONTROL ACT (TSCA) IN ACCORDANCE WITH APPLICABLE FEDERAL, STATE, AND LOCAL REGULATIONS. APPLICABLE EQUIPMENT AND MATERIALS INCLUDE, BUT ARE NOT LIMITED TO:
- PCB-CONTAINING ELECTRICAL EQUIPMENT, INCLUDING TRANSFORMERS, CAPACITORS, AND SWITCHES.
- PCB- AND DEHP-CONTAINING LIGHTING BALLASTS.
- MERCURY-CONTAINING LAMPS AND TUBES, INCLUDING FLUORESCENT LAMPS, HIGH INTENSITY DISCHARGE (HID), ARC LAMPS, ULTRA-VIOLET, HIGH PRESSURE SODIUM, MERCURY VAPOR, IGNITRON TUBES, NEON, AND INCANDESCENT.
- CONTRACTOR TO COORDINATE ANY REQUIRED HAZARDOUS MATERIAL REMOVAL WITH THE OWNER, ENGINEER, AND APPLICABLE TRADE CONTRACTOR.

GENERAL SHEET NOTES:

1. REFER TO E-001 FOR ELECTRICAL LEGENDS, ABBREVIATIONS, AND GENERAL PROJECT NOTES.
2. ITEMS INDICATED TO BE REMOVED:
   - 2.1. REMOVE ALL CONDUCTORS AND EXPOSED CONDUIT BACK TO SOURCE (UOI).
   - 2.2. REMOVE CIRCUIT WIRING AND CIRCUIT BREAKER FROM SOURCE PANEL (UOI).
   - 2.3. REMOVE ALL ASSOCIATED CONTROL CONDUCTORS, CONDUITS, AND DEVICES (UOI).
   - 2.4. REMOVE ASSOCIATED STARTERS, DISCONNECTS, AND ASSOCIATED CIRCUITRY (UOI).
   - 2.5. REMOVE EQUIPMENT PADS & MOUNTING HARDWARE, BRACKETS, ACCESSORIES, ETC... (UOI).
   - 2.6. REVISE PANELBOARD AND MOTOR CONTROL CENTER DIRECTORIES/NAME PLATES AS CHANGES OCCUR (UOI).
3. THESE DEMOLITION DRAWINGS ARE SCHEMATIC IN NATURE AND ARE BASED ON CURSORY FIELD OBSERVATION AND EXISTING DRAWINGS. IT IS NOT THE INTENTION OF THESE DRAWINGS TO INDICATE EVERY DEVICE/FIXTURE REQUIRING REMOVAL/DEMO RATHER GENERAL SYSTEMS WHICH ARE TO BE REMOVED.
4. CIRCUITS NOT IN AREA OF WORK THAT ARE AFFECTED BY WORK SHALL BE OPERATIONAL DURING PROJECT. PROVIDE TEMPORARY CIRCUITS AS NECESSARY.
5. CIRCUIT, EQUIPMENT, AND DEVICE REMOVAL SHALL NOT AFFECT THE INTEGRITY OR FUNCTIONALITY OF CIRCUITS TO REMAIN. ALL CIRCUITS TO REMAIN SHALL BE MAINTAINED. PROVIDE ALL NECESSARY CIRCUIT MODIFICATIONS AND EXTENSIONS.
6. WHERE REMOVALS LEAVE HOLES AND DAMAGED SURFACES EXPOSED IN THE FINISHED WORK, PATCH AND REPAIR THESE HOLES AND DAMAGED SURFACES TO MATCH ADJACENT FINISHED SURFACES. WHERE NEW WORK IS TO BE APPLIED TO EXISTING SURFACES, PERFORM REMOVALS, AND PATCHING IN A MANNER TO PRODUCE SURFACES SUITABLE FOR RECEIVING NEW WORK. COORDINATE ALL WORK WITH OWNER, ENGINEER, AND APPLICABLE TRADE CONTRACTOR.
7. COORDINATE WITH ALL CONTRACT DRAWINGS AND TRADE CONTRACTORS FOR ADDITIONAL EQUIPMENT THAT IS TO BE DEMOLISHED. FOR ALL EQUIPMENT SHOWN/INDICATED FOR REMOVAL, DISCONNECT AND REMOVE ELECTRICAL CIRCUIT INCLUDING CONDUCTORS AND CONDUIT BACK TO SOURCE.
8. NOT ALL EQUIPMENT/DEVICES ARE SHOWN FOR CLARITY. CONTRACTOR SHALL FIELD VERIFY ALL EXISTING CONDITIONS AND REPORT DISCREPANCIES TO ENGINEER PRIOR TO COMMENCEMENT OF DEMOLITION.
9. REFER TO THE ELECTRICAL SINGLE LINE DIAGRAMS, SCHEDULES & DETAILS FOR ADDITIONAL DEMOLITION INFORMATION/REQUIREMENTS.
10. COORDINATE ALL ASPECTS OF SEQUENCE OF REMOVAL WITH THE OWNER, ENGINEER, AND ALL TRADE CONTRACTORS. REFER TO SPECIFICATIONS AND DEMOLITION SINGLE LINE DIAGRAM FOR ADDITIONAL INFORMATION.
11. WHERE REMOVAL OF CONDUIT SYSTEM IS NOT FEASIBLE, REMOVE ALL CONDUCTORS FROM CONDUIT SYSTEM, CUT FLUSH, CAP CONDUIT SYSTEM, AND ABANDON IN PLACE. FEASIBLE IS DEFINED AS BEING LOCATED WITHIN A CONCRETE DUCT BANK OR CONCRETE SLAB. ALL OTHER INSTANCES TO HAVE THE CONDUIT & CIRCUITRY TO BE REMOVED IN THERE ENTIRETY. FIELD VERIFY AND COORDINATE FINAL REQUIREMENTS WITH THE OWNER, TYPICAL.

SHEET KEY NOTES:

1. CONTRACTOR TO PROVIDE COMPLETE ELECTRICAL DEMOLITION FOR THIS AREA (UNLESS OTHERWISE INDICATED). REMOVE THE FOLLOWING DEVICES INCLUDING BUT NOT LIMITED TO; ALL ELECTRICAL DISTRIBUTION EQUIPMENT, CONTROLLERS, CONTROL PANELS, DISCONNECTS, MOTOR STARTERS, RECEPTACLES, INTERIOR/EXTERIOR LIGHTING, JUNCTION BOXES, BONDING/GROUNDING EQUIPMENT, ELECTRIC VALVES, MOTORS (DISCONNECT & REMOVE BRANCH CIRCUITRY), AND INSTRUMENTATION/CONTROLS. REMOVE ALL ASSOCIATED CIRCUITRY (CONDUIT & CONDUCTORS) BACK TO SOURCE. COORDINATE REMOVAL EFFORTS CLOSELY WITH ALL TRADE CONTRACTORS, OWNER, AND ENGINEER.
2. CONTRACTOR TO CLOSELY COORDINATE THE REMOVAL EFFORTS OF ALL PLANT PROCESS EQUIPMENT/DEVICES SCHEDULED FOR REMOVAL WITH GENERAL CONTRACTOR, OWNER, AND ENGINEER.
3. NOTE, CONTRACTOR TO ENSURE ALL ELECTRICAL BRANCH CIRCUITS AND CONDUITS ARE REMOVED IN THIS AREA ASSOCIATED WITH EQUIPMENT SCHEDULED FOR REMOVAL, TO AVOID CONFLICT WITH PROPOSED EQUIPMENT, DUCT WORK, AND PIPING SYSTEMS. COORDINATE ALL EFFORTS CLOSELY WITH APPLICABLE TRADE CONTRACTOR, OWNER, AND ENGINEER.
4. JUNCTION BOX IS TO BE REMOVED. NOTE, ALL BOXES AND RACEWAY SYSTEMS ASSOCIATED WITH EQUIPMENT SCHEDULED FOR REMOVAL ARE TO BE REMOVED IN THEIR ENTIRETY.

TYPICAL OF THREE (3):
PRIMARY SETTLING TANK #1,
PRIMARY SETTLING TANK #2,
AND PRIMARY SETTLING TANK #3

MHE ENGINEERING
33 Airport Center Drive, Suite 202
New Windsor, NY 12553
(845) 587-3100
111 Wheatfield Drive, Suite 1
Milford, PA 18337
(570) 296-2765

BID ADDENDUM

JADE STONE ENGINEERING

STATE OF NEW YORK
JEFFREY E. ROBINSON
095896
LICENSED PROFESSIONAL ENGINEER

HAZARDOUS MATERIAL NOTE:
THE SERVICES PROVIDED BY MHE, INCLUDING ALL WORK DEPICTED ON MHE PLANS, DO NOT INCLUDE SERVICES RELATED TO THE IDENTIFICATION, CONTROLS OR HANDLING OF HAZARDOUS MATERIALS, INCLUDING SUCH MATERIALS AS ASBESTOS AND LEAD PAINT. ALL TESTING, IDENTIFICATION, ABATEMENT, CONTROLS, AND HANDLING OF HAZARDOUS MATERIALS SHALL BE UNDERTAKEN BY A HAZARDOUS MATERIAL CONSULTANT AND CERTIFIED PROFESSIONALS. IF SUCH MATERIALS HAVE BEEN IDENTIFIED, CONTRACTOR WILL COMMUNICATE DIRECTLY WITH HAZARDOUS MATERIAL PROFESSIONAL FOR THE PERFORMANCE OF ANY WORK ON OR ADJACENT TO SAID MATERIALS. IF UNIDENTIFIED MATERIALS OF CONCERN ARE ENCOUNTERED WHILE UNDERTAKING THE WORK SHOWN HEREON, CONTRACTOR SHALL IMMEDIATELY NOTIFY ENGINEER AND OWNER, AND SHALL OBTAIN DIRECTION FROM THE HAZARDOUS MATERIAL CONSULTANT PRIOR TO THE CONTINUATION OF WORK INVOLVING SUSPECTED MATERIAL.

UDIG·NY SAFE DIGGING STARTS HERE
CALL 811

UNAUTHORIZED ADDITION OR ALTERATION OF THIS PLAN IS A VIOLATION OF SECTION 7209(2) OF THE NEW YORK STATE EDUCATION LAW.

ALL PRODUCTION & INTELLECTUAL PROPERTY RIGHT RESERVED ©

CAESARS LANE WWTP EXPANSION PROJECT: PHASE 2
145 CAESARS LN.
NEW WINDSOR, NY 12553
FOR TOWN OF NEW WINDSOR
555 UNION AVE.
NEW WINDSOR, NY 12553

ELECTRICAL DEMOLITION PLANS - PRIMARY SETTLING TANKS

REVISIONS

NO.	DESCRIPTION	DATE

ISSUED DATE:	06 JUNE, 2025
DESIGN BY:	RRM
DRAWN BY:	CDJ
CHECKED BY:	MGR
REVIEWED BY:	JER

SHEET NO.
E-300

PROJECT # 18-732 PHASE #

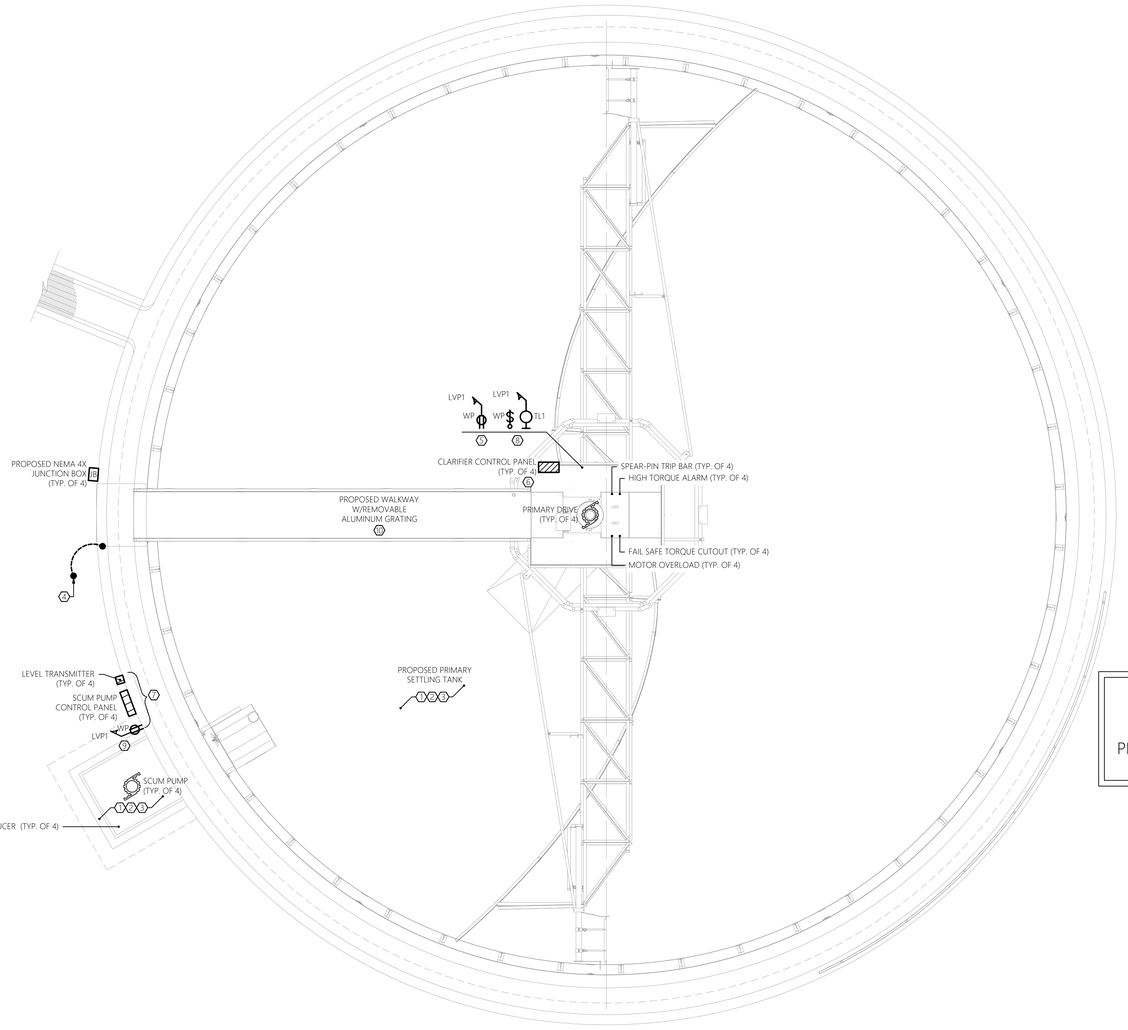

TYPICAL OF FOUR (4):
PRIMARY SETTLING TANK #1,
PRIMARY SETTLING TANK #2,
PRIMARY SETTLING TANK #3, AND
PRIMARY SETTLING TANK #4

1 E-301 ELECTRICAL NEW WORK PLAN
SCALE: 1/4" = 1'-0" PRIMARY SETTLING TANK #1, #2, #3, AND #4

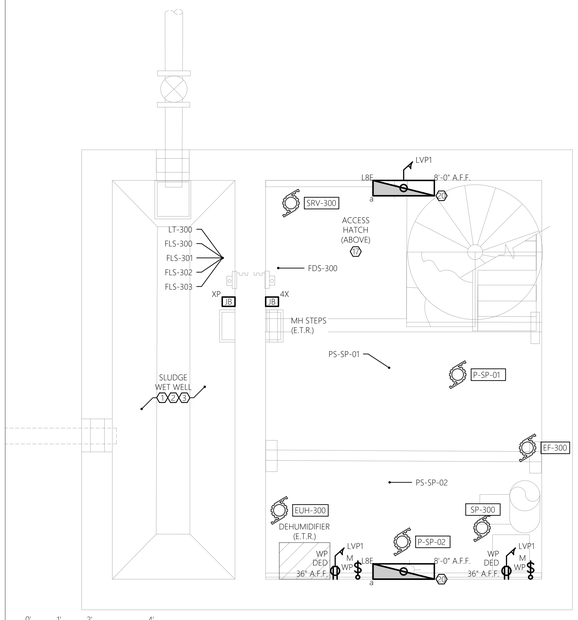

0' 1' 2' 4'
SCALE: 1/2" = 1'-0"
0' 2' 4' 8'
SCALE: 1/4" = 1'-0"

2 E-301 ELECTRICAL NEW WORK PLAN
SCALE: 1/2" = 1'-0" PRIMARY SLUDGE PIT

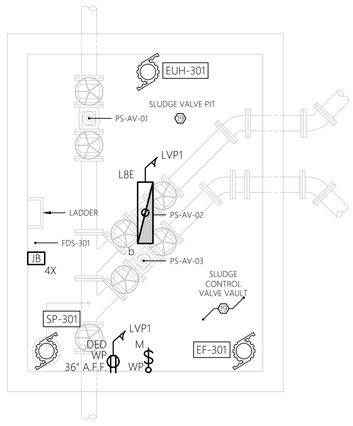

3 E-301 ELECTRICAL NEW WORK PLAN
SCALE: 1/2" = 1'-0" SLUDGE CONTROL VALVE VAULT

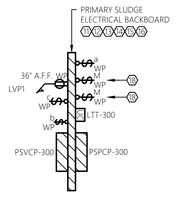

4 E-301 PRIMARY SLUDGE ELECTRICAL BACKBOARD
SCALE: 1/2" = 1'-0"

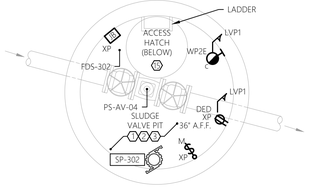

5 E-301 ELECTRICAL NEW WORK PLAN
SCALE: 1/2" = 1'-0" PROPOSED SLUDGE VALVE PIT

GENERAL NEW WORK NOTES:

1. REFER TO E-001 FOR ELECTRICAL LEGENDS, ABBREVIATIONS AND GENERAL PROJECT NOTES.
2. PROVIDE A DEDICATED GROUNDING CONDUCTOR FOR ALL ELECTRICAL EQUIPMENT AND ASSOCIATED EQUIPMENT/DEVICES.
3. EQUIPMENT & DEVICE LOCATIONS ARE SHOWN AS GENERAL IN NATURE. REFER TO ALL TRADE CONTRACT DRAWINGS AND COORDINATE WITH ALL TRADE CONTRACTORS FOR EXACT LOCATIONS. CLOSE CONTRACTOR COORDINATION REQUIRED.
4. ALL PROPOSED EQUIPMENT LOCATIONS/INSTALLATIONS TO COMPLY WITH NEC ARTICLE 110.26 'SPACES ABOUT ELECTRICAL EQUIPMENT'.
5. CONTRACTOR TO PROVIDE ALL REQUIRED MOUNTING HARDWARE, EQUIPMENT, BRACKETS, SUPPORTS, ACCESSORIES, ETC... PROVIDE AS STAINLESS STEEL IN CORROSIVE ENVIRONMENTS, EXTERIOR APPLICATIONS, OR WHERE INDICATED ON THE CONTRACT DRAWINGS.
6. NOT ALL EQUIPMENT/DEVICES MAY BE SHOWN FOR CLARITY. CONTRACTOR SHALL FIELD VERIFY ALL EXISTING AND PROPOSED CONDITIONS PRIOR TO COMMENCEMENT OF CONSTRUCTION. COORDINATE WITH APPLICABLE CONTRACTOR, OWNER, AND ENGINEER.
7. CONTRACTOR RESPONSIBLE FOR MOUNTING OF APPLICABLE CONTRACTOR, OWNER, AND ENGINEER FURNISHED PANELS. COORDINATE WITH APPLICABLE CONTRACTOR, OWNER, AND ENGINEER AND PROVIDE ALL NECESSARY MOUNTING HARDWARE/EQUIPMENT.
8. CONTRACTOR TO COORDINATE ALL ASPECTS OF SEQUENCE OF CONSTRUCTION WITH THE APPLICABLE CONTRACTOR, OWNER, AND ENGINEER.
9. CONTRACTOR TO ADJUST FINAL INTERIOR LIGHT FIXTURE LOCATIONS TO AVOID CONFLICTS WITH EQUIPMENT, PIPING SYSTEMS, AND DUCTWORK. COORDINATE WITH ALL TRADES.
10. CONTRACTOR TO ADJUST FINAL AIMING ANGLE OF EXTERIOR LIGHT FIXTURES TO LIGHT DESIRED AREAS AND MINIMIZE LIGHT POLLUTION. COORDINATE WITH THE OWNER. REFER TO THE LUMINAIRE SCHEDULE FOR ADDITIONAL INFORMATION/REQUIREMENTS.
11. ALL EXTERIOR RECEPTACLES TO BE INSTALLED AT A HEIGHT OF 36" A.F.G.
12. CONTRACTOR TO COORDINATE ALL CONDUIT PENETRATIONS AND CONDUIT ROUTING WITH APPLICABLE CONTRACTOR, OWNER, AND ENGINEER PRIOR TO ROUGH-IN.
13. REFER TO ELECTRICAL SINGLE LINE DIAGRAMS, SPECIFICATIONS, RISER DIAGRAMS, SCHEDULES & DETAILS FOR ADDITIONAL INFORMATION/REQUIREMENTS.
14. CONTRACTOR TO PROVIDE LABEL FOR ALL PROPOSED ELECTRICAL EQUIPMENT. REFER TO SPECIFICATIONS FOR LABELING INFORMATION/REQUIREMENTS. PROVIDE LABEL FOR ALL LIGHT SWITCHES/TIME SWITCHES INDICATING LOAD SERVED, AS WELL AS ALARM LIGHTS/HORNS.
15. ALL EQUIPMENT/DEVICES INSTALLED ON EXTERIOR WALLS OF THE HEADWORKS ROOM TO BE INSTALLED 3'-0" MINIMUM FROM ANY OPENINGS (DOORS, LOUVERS, ETC.). FINAL REQUIREMENTS TO BE IN COMPLIANCE WITH THE LATEST EDITION OF NFPA 820.

SHEET KEY NOTES:

1. TANK INTERIOR IS A CLASSIFIED SPACE. THE CLASS I, DIVISION II, GROUP D SPACE EXTENDS 18" ABOVE TOP OF TANK WALL AND EXTENDS 10'-0" HORIZONTALLY FROM THE TANK EXTERIOR WALL. ALL WIRING METHODS WITHIN THIS SPACE TO COMPLY WITH NEC ARTICLE 501. ALL ELECTRICAL EQUIPMENT AND DEVICES WITHIN THIS SPACE TO BE EXPLOSION PROOF RATED FOR USE IN A CLASSIFIED ENVIRONMENT. REFER TO TABLE NFPA820 TABLE FOR ADDITIONAL INFORMATION/REQUIREMENTS.
2. ROUTING AND ATTACHMENT METHODS OF ALL CONDUITS WITHIN STRUCTURE ARE TO BE CLOSELY COORDINATED WITH APPLICABLE CONTRACTOR, OWNER, AND ENGINEER TO AVOID CONFLICTS. ALL RACEWAY TO BE PVC COATED RGS BY PLASTI-BOND, OR APPROVED EQUAL. ALL MOUNTING HARDWARE, BRACKETS, SUPPORTS, CHANNELS, FITTINGS, CLAMPS, ETC... TO BE A CORROSION RESISTANT PRODUCT LINE AS MANUFACTURED BY POWER-STRUT DEFENDER, OR APPROVED EQUAL. SUBMIT PRODUCT DATA TO ENGINEER DURING SUBMITTAL PHASE FOR APPROVAL. REFER TO RACEWAY SCHEDULE FOR ADDITIONAL INFORMATION.
3. ALL ELECTRICAL EQUIPMENT, COMPONENTS, DEVICES, AND RACEWAY SYSTEMS TO BE KEPT OUT OF CLASSIFIED AREAS TO GREATEST EXTENT POSSIBLE.
4. CONTRACTOR TO PROVIDE 3/4"Ø x 10' COPPER GROUND ROD. BOND ALL METAL STRUCTURES (GRATING, LADDERS, HANDRAILS, STAIRS, ETC...) TO GROUND ROD USING #2 COPPER CONDUCTOR WITHIN RGS CONDUIT. TYPICAL OF EACH PRIMARY SETTLING TANK.
5. CONTRACTOR TO PROVIDE 125V, 2-POLE, 3-WIRE, 20-AMP, HEAVY-DUTY, WEATHER-PROOF, DUPLEX RECEPTACLE WITH INTEGRAL GFI PROTECTION AND INSTALL AT 36" ABOVE TANK WALKWAY. PROVIDE STAINLESS STEEL MOUNTING HARDWARE & UNISTRUT FOR INSTALLATION AS INDICATED. PROVIDE DEDICATED CIRCUIT FROM PANEL 'LVP4' AS SHOWN. CIRCUIT IS TO BE SHARED WITH RECEPTACLE NEAR SCUM PUMP CONTROL PANEL. REFER TO 'LVPT' PANEL SCHEDULE AND DUCT BANK SCHEDULE FOR CIRCUITING AND ADDITIONAL INFORMATION/REQUIREMENTS. TYPICAL OF EACH PRIMARY SETTLING TANK.
6. PROVIDE ALL REQUIRED STAINLESS STEEL UNISTRUT, MOUNTING HARDWARE, BRACKETS, ACCESSORIES, ETC... FOR STANCHION MOUNTING ABOVE TANK WALKWAY AS SHOWN/INDICATED.
7. PROVIDE ALL REQUIRED STAINLESS STEEL UNISTRUT, MOUNTING HARDWARE, BRACKETS, SUPPORTS, ACCESSORIES, ETC... FOR STANCHION MOUNTING ON TANK HANDRAIL AS SHOWN/INDICATED.
8. CONTRACTOR TO PROVIDE TELESCOPING POLE LIGHT AND 125V, 20A, HEAVY-DUTY SWITCH WITH WEATHER-PROOF-IN-USE BUBBLE COVER FOR ON/OFF CONTROL OF LIGHT. LIGHT IS TO SHARE THE CIRCUIT WITH TANK RECEPTACLES FROM PANEL 'LVP1' AS SHOWN. REFER TO 'LVP1' PANEL SCHEDUEL AND DUCT BANK SCHEDULE FOR CIRCUITING AND ADDITIONAL INFORMATION/REQUIREMENTS. PROVIDE STAINLESS STEEL MOUNTING HARDWARE AND UNISTRUT FOR INSTALLATION AS INDICATED. COORDINATE FINAL LOCATION WITH OWNER AND APPLICABLE TRADE CONTRACTORS. TYPICAL OF EACH PRIMARY SETTLING TANK.
9. CONTRACTOR TO PROVIDE 125V, 2-POLE, 3-WIRE, 20A, EAVY-DUTY, WEATHER-PROOF-IN-USE BUBBLE COVER, DUPLEX RECEPTACLE WITH INTEGRAL GFI PROTECTION AND INSTALL AT 36" ABOVE FINISHED GRADE. RECEPTACLE CIRCUIT IS TO SHARED WITH RECEPTACLE ON TANK WALKWAY. REFER TO 'LVPT' PANEL SCHEDULE AND DUCT BANK SCHEDULE FOR CIRCUITING AND ADDITIONAL INFORMATION/REQUIREMENTS. TYPICAL OF EACH PRIMARY SETTLING TANK.
10. CONTRACTOR TO ROUTE ALL CONDUIT UNDER WALKWAY FOR EQUIPMENT LOCATED ON WALKWAY. PROVIDE ALL REQUIRED STAINLESS STEEL MOUNTING HARDWARE, UNISTRUT ACCESSORIES, ETC... AS REQUIRED TO INSTALL CONDUITS UNDER WALKWAY PER NEC. ROUTING METHODS TO BE CLOSELY COORDINATED WITH THE APPLICABLE TRADE CONTRACTOR TO AVOID CONFLICTS.
11. CONTRACTOR TO PROVIDE 20WATT LED LUMINAIRE SUITED FOR EXTERIOR USE. PROVIDE WITH BRACKET/MOUNT TO ALLOW OWNER TO ADJUST LIGHT FIXTURE ANGLE/POSITION. PROVIDE POWER CIRCUITRY FROM PANEL 'LVP7'. INSTALL LIGHT TO BACKBOARD AT MINIMUM 48" ABOVE FINISHED GRADE.
12. CONTRACTOR TO PROVIDE RECEPTACLE AS 125 VOLT, 2 POLE, 3 WIRE, 20 AMP, WEATHERPROOF GFCI HEAVY DUTY DUPLEX RECEPTACLE. PROVIDE POWER CIRCUITRY FROM PANEL 'LVP1'. INSTALL RECEPTACLE TO BACKBOARD AT MINIMUM 36" ABOVE FINISHED GRADE.
13. ALL PROPOSED EQUIPMENT/ENCLOSURES ON ELECTRICAL BACKBOARD TO BE RATED FOR OUTDOOR USE (MINIMUM NEMA 4X).
14. CONTRACTOR TO PROVIDE ELECTRICAL BACKBOARD. FINAL LOCATION TO BE COORDINATED WITH THE OWNER AND APPLICABLE CONTRACTOR PRIOR TO ROUGH-IN TO AVOID CONFLICT WITH EXISTING CONDITIONS AND PROPOSED WORK. REFER TO SLUDGE CONTROL ELECTRICAL BACKABOARD DETAIL AND SITE PLAN FOR ADDITIONAL INFORMATION, REQUIREMENTS, AND GENERAL LOCATION.
15. CONTRACTOR TO PROVIDE ALL REQUIRED STAINLESS STEEL MOUNTING HARDWARE, BRACKETS, ACCESSORIES, ETC... REFER TO 'TYPICAL ELECTRICAL BACKBOARD DETAIL' FOR ADDITIONAL INFORMATION/REQUIREMENTS.
16. WHERE APPLICABLE, ALL PROPOSED EQUIPMENT ON ELECTRICAL BACKBOARD TO PROVIDED AS PAD-LOCKABLE. PROVIDE LOCK (TURN KEY OVER TO THE OWNER). COORDINATE FINAL REQUIREMENTS WITH THE OWNER.
17. ACCESS HATCH (BELOW)CONTRACTOR TO KEEP AREA CLEAR AND COORDINATE FINAL LOCATION/REQUIREMENTS WITH APPLICABLE TRADE CONTRACTOR
18. CONTRACTOR TO PROVIDE MOTOR RATED SWITCHES WITHIN NEMA 4X ENCLOSURE FOR CONTROL OF PRIMARY SLUDGE PIT EXHAUST FANS 'EF-300' AND 'EF-301'. REFER TO EQUIPMENT CONNECTION SCHEDULE FOR ADDITIONAL INFORMATION. COORDINATE FINAL REQUIREMENTS WITH APPLICABLE CONTRACTOR, OWNER, AND ENGINEER.
19. ROUTING AND ATTACHMENT METHODS OF ALL CONDUITS TO BE CLOSELY COORDINATED WITH APPLICABLE CONTRACTOR AND OWNER PRIOR TO ROUGH-IN AND VERIFIED IN FIELD TO AVOID POTENTIAL CONFLICTS WITH PROPOSED EQUIPMENT, DUCT WORK, AND PIPING SYSTEMS.
20. MOUNT TWO (2) LIGHT FIXTURES ON WALLS OF UPPER LEVEL OF SLUDGE PIT AS SHOWN AND MOUNT AN ADDITIONAL TWO (2) LIGHT FIXTURES ON WALLS OF LOWER LEVEL DIRECTLY BELOW UPPER LEVEL LIGHT FIXTURES FOR A TOTAL OF FOUR (4) IN THE SLUDGE PIT. ALL LIGHTS ARE TO BE ON THE SAME CIRCUIT AND CONTROLLED BY LIGHT SWITCH 'a' AS SHOWN.

MHE ENGINEERING
33 Airport Center Drive, Suite 202
New Windsor, NY 12553
(845) 567-3100
111 Wheatfield Drive, Suite 1
Milford, PA 18337
(570) 296-2765

BID ADDENDUM

JADE STONE ENGINEERING

STATE OF NEW YORK · JEFFREY E. ROBINSON · 095896 · PROFESSIONAL ENGINEER

HAZARDOUS MATERIAL NOTE:

THE SERVICES PROVIDED BY MHE, INCLUDING ALL WORK DEPICTED ON MHE PLANS, DO NOT INCLUDE SERVICES RELATED TO THE IDENTIFICATION, CONTROLS OR HANDLING OF HAZARDOUS MATERIALS, INCLUDING SUCH MATERIALS AS ASBESTOS AND LEAD PAINT. ALL TESTING, IDENTIFICATION, ABATEMENT, CONTROLS, AND HANDLING OF HAZARDOUS MATERIALS SHALL BE UNDERTAKEN BY A HAZARDOUS MATERIAL CONSULTANT AND CERTIFIED PROFESSIONALS. IF SUCH MATERIALS HAVE BEEN IDENTIFIED, CONTRACTOR WILL COMMUNICATE DIRECTLY WITH HAZARDOUS MATERIAL PROFESSIONAL FOR THE PERFORMANCE OF ANY WORK ON OR ADJACENT TO SAID MATERIALS. IF UNIDENTIFIED MATERIALS OF CONCERN ARE ENCOUNTERED WHILE UNDERTAKING THE WORK SHOWN HEREON, CONTRACTOR SHALL IMMEDIATELY NOTIFY ENGINEER AND OWNER, AND SHALL OBTAIN DIRECTION FROM THE HAZARDOUS MATERIAL CONSULTANT PRIOR TO THE CONTINUATION OF WORK INVOLVING SUSPECTED MATERIAL.

UDIG·NY SAFE DIGGING STARTS HERE
CALL 811

UNAUTHORIZED ADDITION OR ALTERATION OF THIS PLAN IS A VIOLATION OF SECTION 7209(2) OF THE NEW YORK STATE EDUCATION LAW.

ALL PRODUCTION & INTELLECTUAL PROPERTY RIGHT RESERVED ©

CAESARS LANE WWTP EXPANSION PROJECT: PHASE 2
145 CAESARS LN.
NEW WINDSOR, NY 12553
FOR TOWN OF NEW WINDSOR
555 UNION AVE.
NEW WINDSOR, NY 12553

ELECTRICAL NEW WORK PLANS - PRIMARY SETTLING TANKS

REVISIONS

NO.	DESCRIPTION	DATE

ISSUED DATE:	06 JUNE, 2025
DESIGN BY:	RRM
DRAWN BY:	CDJ
CHECKED BY:	MGR
REVIEWED BY:	JER

SHEET NO.
E-301

PROJECT # 18-732 PHASE #

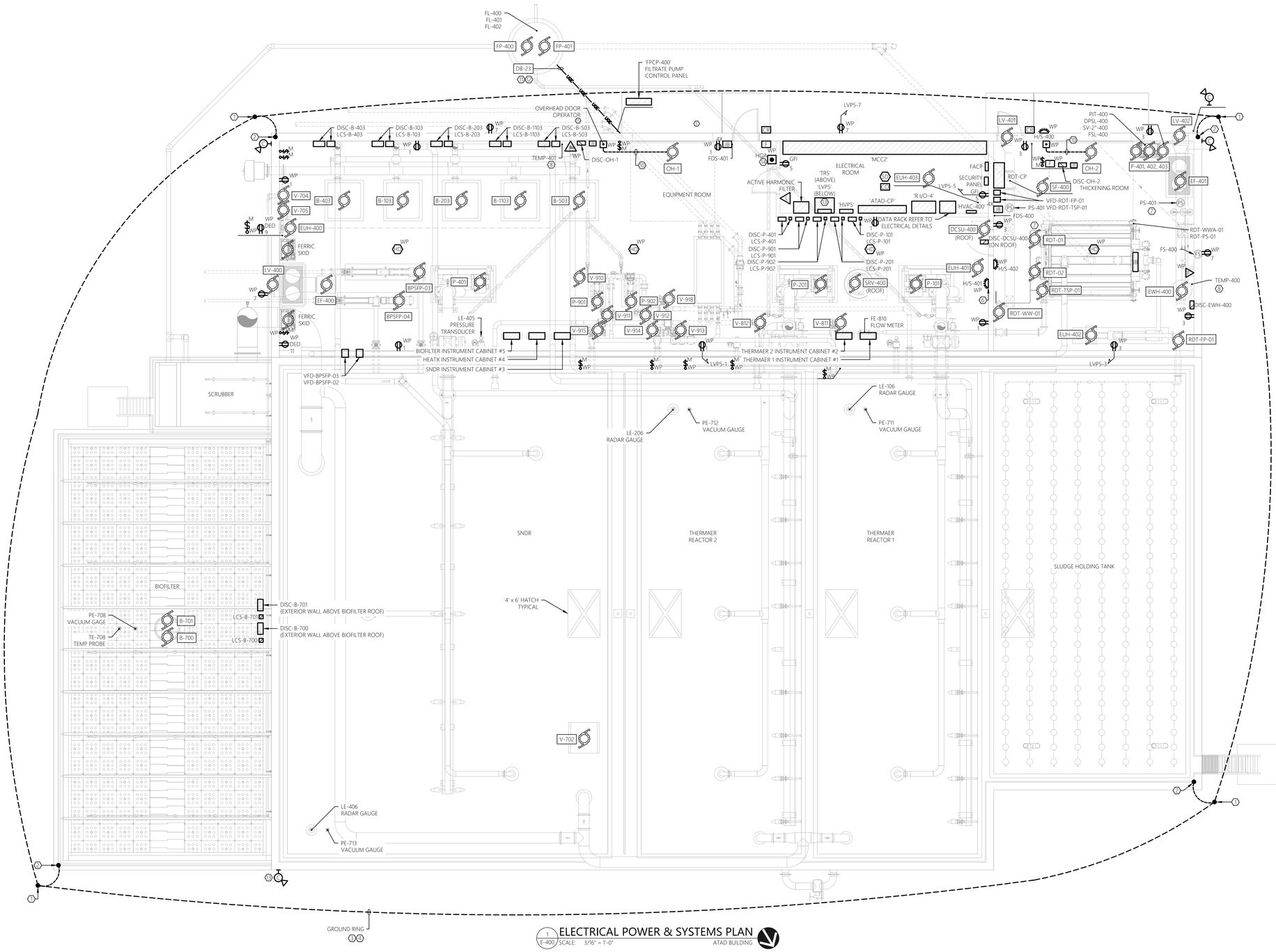

1 E-400 ELECTRICAL POWER & SYSTEMS PLAN

SCALE: 3/16" = 1'-0"

ATAD BUILDING

GENERAL NEW WORK NOTES:

1. REFER TO E-001 FOR ELECTRICAL LEGENDS, ABBREVIATIONS AND GENERAL PROJECT NOTES.
2. PROVIDE A DEDICATED GROUNDING CONDUCTOR FOR ALL ELECTRICAL EQUIPMENT AND ASSOCIATED EQUIPMENT AND DEVICES.
3. EQUIPMENT & DEVICE LOCATIONS ARE SHOWN AS GENERAL IN NATURE. REFER TO MECHANICAL, PROCESS AND HVAC DRAWINGS FOR EXACT LOCATIONS.
4. ALL PROPOSED EQUIPMENT LOCATIONS/INSTALLATIONS TO COMPLY WITH NEC ARTICLE 110.26 'SPACES ABOUT ELECTRICAL EQUIPMENT'. CONTRACTOR TO COORDINATE INSTALLATION LOCATIONS OF ALL EQUIPMENT WITH ALL OTHER TRADE CONTRACTORS PRIOR TO ROUGH IN.
5. CONTRACTOR RESPONSIBLE FOR MOUNTING OF ALL CONTROL PANELS, CONTROLLERS, TRANSMITTERS, ETC... THAT ARE FURNISHED AS PART OF THIS PROJECT (INCLUDING GENERAL CONTRACTOR). PROVIDE ALL NECESSARY MOUNTING HARDWARE/EQUIPMENT. ALL MOUNTING HARDWARE/EQUIPMENT TO BE STAINLESS STEEL. REFERENCE TYPICAL MOUNTING DETAILS FOR ADDITIONAL INFORMATION.
6. REFER TO ELECTRICAL SINGLE LINE DIAGRAM, SCHEDULES, AND DETAILS FOR ADDITIONAL INFORMATION/REQUIREMENTS.
7. CONTRACTOR TO COORDINATE ALL ASPECTS OF SEQUENCE OF CONSTRUCTION WITH OWNER AND GENERAL CONTRACTOR.
8. ALL EXTERIOR RECEPTACLES TO BE INSTALLED AT A HEIGHT OF 36" A.F.G. ALL INTERIOR RECEPTACLES TO BE INSTALLED AT A HEIGHT OF 24" A.F.F. UNLESS NOTED OTHERWISE.
9. CONTRACTOR TO PROVIDE LABEL FOR ALL PROPOSED ELECTRICAL EQUIPMENT AND DEVICES. COORDINATE FINAL LABELING REQUIREMENTS WITH THE OWNER AND ALL OTHER TRADE CONTRACTORS.
10. COORDINATE CONDUIT PENETRATION LOCATIONS THRU EXTERIOR BUILDING WALLS CLOSELY WITH GENERAL CONTRACTOR PRIOR TO PERFORMING WORK.
11. REFER TO DATA DETAILS FOR COMMUNICATION SCOPE OF WORK.

0' 2' 4' 8' 16'

SCALE: 3/16" = 1'-0"

SHEET KEY NOTE:

1. CONTRACTOR TO PROVIDE 3/4"Ø x 10' COPPER GROUND ROD. BOND ALL METAL STRUCTURES AND LIGHTING PROTECTION DOWN CONDUCTOR TO GROUND ROD USING #2/0 COPPER CONDUCTOR WITHIN RGS CONDUIT. REFER TO TYPICAL LIGHTNING PROTECTION GROUNDING DETAILS AND TYPICAL PANEL GROUNDING DETAIL FOR ADDITIONAL INFORMATION/REQUIREMENTS.
2. LIGHTNING PROTECTION DOWN CONDUCTOR. CONCEAL IN RGS CONDUIT WITHIN EXTERIOR WALL CONSTRUCTION. CONTRACTOR TO WORK WITH CERTIFIED LIGHTNING PROTECTION INSTALLER TO PROVIDE COMPLETE BUILDING LIGHTNING PROTECTION SYSTEM IN ACCORDANCE WITH NFPA. UPON COMPLETION PROVIDE UL MASTER LABEL. REFER TO LIGHTNING PROTECTION FOR STRUCTURES SPECIFICATIONS FOR REQUIREMENTS AND ADDITIONAL INFORMATION.
3. GROUND RING. GROUND RING TO BE BURIED AT MINIMUM 3 FEET BELOW FINISHED GRADE. GROUND RING TO BE KEPT AT MINIMUM OF 3 FEET AWAY FROM BUILDING AT ALL TIMES. PROVIDE AND INSTALL 3/4"Ø x 10' GROUND RODS AT EACH CORNER OF GROUND RING FOR A TOTAL OF SIX (6) GROUND RODS. ALL GROUND CONDUCTORS SHALL BE #2/0 COPPER, U.O.N.
4. CONTRACTOR TO ADDITIONALLY BOND GROUND RING TO ADJACENT BUILDING GROUND SYSTEM. UTILIZE #2/0 COPPER GROUND CONDUCTOR.
5. LADDER, STAIRS, HANDRAIL AND ALL OTHER METALLIC STRUCTURES.
6. HVAC MONITORING SYSTEM ALARM HORN/STROBES. INSTALL DEVICES (HORN/STROBES) AT 8'-0" ABOVE FINISHED FLOOR/GRADE. TYPICAL OF TWO (2). REFER TO RISER DIAGRAM FOR ADDITIONAL INFORMATION/REQUIREMENTS.
7. PRESSURE SENSOR FOR MONITORING. COORDINATE FINAL CIRCUITRY REQUIREMENTS WITH THE HVAC CONTRACTOR. CONNECT TO 'HVAC-400'.
8. TEMPERATURE SENSOR FOR MONITORING. COORDINATE FINAL CIRCUITRY REQUIREMENTS WITH THE HVAC CONTRACTOR. CONNECT TO 'R I/O-4'. TYPICAL OF TWO (2)
9. CONTRACTOR TO PROVIDE COMBINATION CARBON MONOXIDE/SMOKE DETECTOR MODEL GN-503F AS MANUFACTURED BY GENTEX OR APPROVED EQUAL. DETECTOR TO BE 120V POWERED BY BUILDING ELECTRICAL SYSTEM, CONTAIN BATTERY BACKUP, AND BE UL LISTED. DETECTOR TO FEATURE ONE (1) SET OF CONTACTS THAT ACTIVATE UPON DETECTION OF SMOKE, OR CARBON MONOXIDE. INSTALL ON WALL PER MANUFACTURER'S RECOMMENDATIONS AND IN ACCORDANCE WITH NFPA 720.
10. PROVIDE LOW VOLTAGE CONDUCTORS IN 1/2" CONDUIT PER MANUFACTURERS RECOMMENDATIONS FOR AN OVERALL COMPLETE AND OPERABLE SYSTEM. COORDINATE FINAL REQUIREMENTS WITH ALL OTHER TRADE CONTRACTORS AND THE OWNER.
11. CONTRACTOR RESPONSIBLE TO RESTORE ALL DISTURBED SURFACES AS PART OF THIS PROJECT. COORDINATE FINAL REQUIREMENTS WITH THE OWNER AND APPLICABLE CONTRACTOR. REFER TO DUCT BANK SECTION DETAILS FOR ADDITIONAL INFORMATION. TYPICAL OF ALL PROPOSED DUCT BANKS.
12. CONTRACTOR TO COORDINATE FINAL DUCT BANK ROUTING/REQUIREMENTS WITH EXISTING FIELD CONDITIONS, PROPOSED WORK, OWNER AND APPLICABLE CONTRACTOR PRIOR TO ROUGH-IN TO AVOID CONFLICTS. TYPICAL OF ALL PROPOSED DUCT BANKS.
13. CONTRACTOR TO PROVIDE WALL MOUNT BRACKETS FOR INSTALLATION ON WALL ABOVE PANEL LVP5.
14. CONTRACTOR TO PROVIDE HAND-OFF-AUTO (H-O-A) SWITCH FOR CONTROL OF EXHAUST FAN 'EF-400' AND LOUVER 'LV-400'. IN HAND MODE FAN IS TO BE ON. IN OFF MODE FAN IS TO BE OFF. IN AUTO MODE FAN IS TO OPERATE VIA REVERSE ACTING THERMOSTAT. CONTRACTOR IS RESPONSIBLE FOR PROVIDING ALL NECESSARY INTERLOCK CIRCUITRY. PROVIDE CONTROL POWER TRANSFORMER AND ENCLOSURE AS REQUIRED TO OBTAIN NECESSARY VOLTAGE FOR THERMOSTAT. REFER TO HVAC DRAWINGS AND COORDINATE WITH APPLICABLE TRADE CONTRACTORS FOR THERMOSTAT LOCATIONS AND FINAL REQUIREMENTS. REFER TO VENTILATION SYSTEM INTERLOCK DETAIL FOR ADDITIONAL INFORMATION.
15. REFER TO EQUIPMENT CONNECTION SCHEDULE AND 'TYPICAL OVERHEAD DOOR RISER DIAGRAM' FOR ADDITIONAL INFORMATION/REQUIREMENTS.

MHE ENGINEERING
33 Airport Center Drive, Suite 202
New Windsor, NY 12553
(845) 567-3100
111 Wheatfield Drive, Suite 1
Milford, PA 18337
(570) 296-2765

BID ADDENDUM

JADE STONE ENGINEERING

STATE OF NEW YORK
JEFFREY E. ROBINSOLE
095896
LICENSED PROFESSIONAL ENGINEER

HAZARDOUS MATERIAL NOTE:

THE SERVICES PROVIDED BY MHE, INCLUDING ALL WORK DEPICTED ON MHE PLANS, DO NOT INCLUDE SERVICES RELATED TO THE IDENTIFICATION, CONTROLS OR HANDLING OF HAZARDOUS MATERIALS, INCLUDING SUCH MATERIALS AS ASBESTOS AND LEAD PAINT. ALL TESTING, IDENTIFICATION, ABATEMENT, CONTROLS, AND HANDLING OF HAZARDOUS MATERIALS SHALL BE UNDERTAKEN BY A HAZARDOUS MATERIAL CONSULTANT AND CERTIFIED PROFESSIONALS. IF SUCH MATERIALS HAVE BEEN IDENTIFIED, CONTRACTOR WILL COMMUNICATE DIRECTLY WITH HAZARDOUS MATERIAL PROFESSIONAL FOR THE PERFORMANCE OF ANY WORK ON OR ADJACENT TO SAID MATERIALS. IF UNIDENTIFIED MATERIALS OF CONCERN ARE ENCOUNTERED WHILE UNDERTAKING THE WORK SHOWN HEREON, CONTRACTOR SHALL IMMEDIATELY NOTIFY ENGINEER AND OWNER, AND SHALL OBTAIN DIRECTION FROM THE HAZARDOUS MATERIAL CONSULTANT PRIOR TO THE CONTINUATION OF WORK INVOLVING SUSPECTED MATERIAL.

UDIG·NY SAFE DIGGING STARTS HERE
CALL 811

UNAUTHORIZED ADDITION OR ALTERATION OF THIS PLAN IS A VIOLATION OF SECTION 7209(2) OF THE NEW YORK STATE EDUCATION LAW.

ALL PRODUCTION & INTELLECTUAL PROPERTY RIGHT RESERVED ©

CAESARS LANE WWTP EXPANSION PROJECT: PHASE 2
145 CAESARS LN.
NEW WINDSOR, NY 12553
FOR TOWN OF NEW WINDSOR
555 UNION AVE.
NEW WINDSOR, NY 12553

ELECTRICAL POWER & SYSTEMS PLAN - ATAD BUILDING

REVISIONS

NO.	DESCRIPTION	DATE

ISSUED DATE:	06 JUNE, 2025
DESIGN BY:	RRM
DRAWN BY:	CDJ
CHECKED BY:	MGR
REVIEWED BY:	JER

SHEET NO.

E-400

PROJECT # 18-732 PHASE #

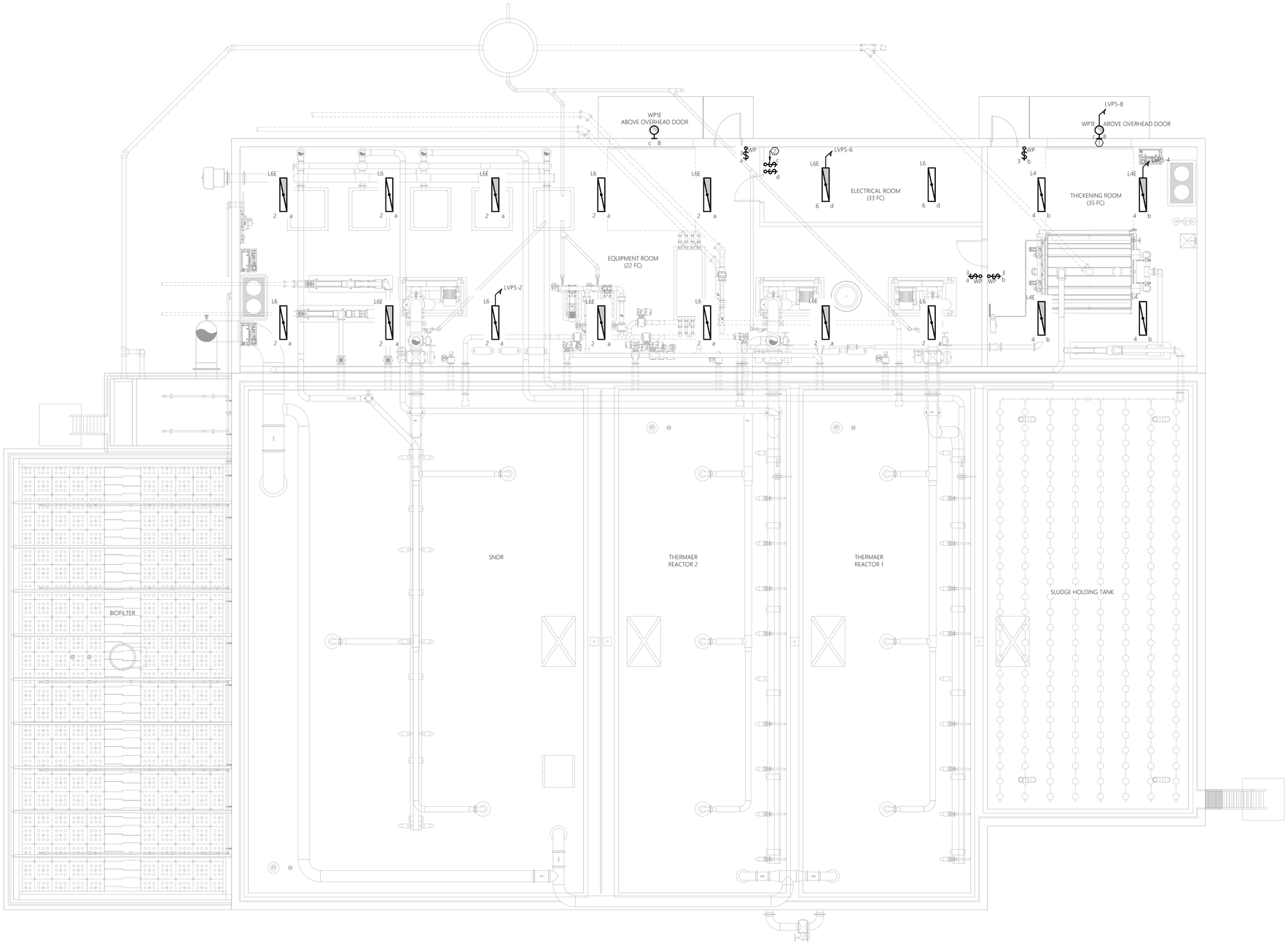

1 E-401 ELECTRICAL LIGHTING PLAN
SCALE: 3/16" = 1'-0" ATAD BUILDING

GENERAL NEW WORK NOTES:

1. REFER TO E-001 FOR ELECTRICAL LEGENDS, ABBREVIATIONS AND GENERAL PROJECT NOTES.
2. PROVIDE A DEDICATED GROUNDING CONDUCTOR FOR ALL ELECTRICAL EQUIPMENT AND ASSOCIATED EQUIPMENT AND DEVICES.
3. EQUIPMENT & DEVICE LOCATIONS ARE SHOWN AS GENERAL IN NATURE. REFER TO MECHANICAL, PROCESS AND HVAC DRAWINGS FOR EXACT LOCATIONS.
4. ALL PROPOSED EQUIPMENT LOCATIONS/INSTALLATIONS TO COMPLY WITH NEC ARTICLE 110.26 'SPACES ABOUT ELECTRICAL EQUIPMENT'. CONTRACTOR TO COORDINATE INSTALLATION LOCATIONS OF ALL EQUIPMENT WITH ALL OTHER TRADE CONTRACTORS PRIOR TO ROUGH IN.
5. CONTRACTOR RESPONSIBLE FOR MOUNTING OF ALL CONTROL PANELS, CONTROLLERS, TRANSMITTERS, ETC... THAT ARE FURNISHED AS PART OF THIS PROJECT (INCLUDING GENERAL CONTRACTOR). PROVIDE ALL NECESSARY MOUNTING HARDWARE/EQUIPMENT. ALL MOUNTING HARDWARE/EQUIPMENT TO BE STAINLESS STEEL. REFERENCE TYPICAL MOUNTING DETAILS FOR ADDITIONAL INFORMATION.
6. REFER TO ELECTRICAL SINGLE LINE DIAGRAM, SCHEDULES, AND DETAILS FOR ADDITIONAL INFORMATION/REQUIREMENTS.
7. CONTRACTOR TO COORDINATE ALL ASPECTS OF SEQUENCE OF CONSTRUCTION WITH OWNER AND GENERAL CONTRACTOR.
8. ALL EXTERIOR RECEPTACLES TO BE INSTALLED AT A HEIGHT OF 36" A.F.G. ALL INTERIOR RECEPTACLES TO BE INSTALLED AT A HEIGHT OF 24" A.F.F. UNLESS NOTED OTHERWISE.
9. CONTRACTOR TO PROVIDE LABEL FOR ALL PROPOSED ELECTRICAL EQUIPMENT AND DEVICES. COORDINATE FINAL LABELING REQUIREMENTS WITH THE OWNER AND ALL OTHER TRADE CONTRACTORS.
10. COORDINATE CONDUIT PENETRATION LOCATIONS THRU EXTERIOR BUILDING WALLS CLOSELY WITH GENERAL CONTRACTOR PRIOR TO PERFORMING WORK.
11. REFER TO DATA DETAILS FOR COMMUNICATION SCOPE OF WORK.
12. CONTRACTOR TO ADJUST FINAL PROPOSED INTERIOR LIGHT FIXTURE LOCATIONS TO AVOID CONFLICTS WITH PROPOSED EQUIPMENT, AND PIPING SYSTEMS.
13. CONTRACTOR TO ADJUST FINAL AIMING ANGLE OF EXTERIOR LIGHT FIXTURES TO LIGHT DESIRED AREAS AND MINIMIZE LIGHT POLLUTION. COORDINATE WITH OWNER AND ALL OTHER TRADE CONTRACTORS. REFER TO THE LUMINAIRE SCHEDULE FOR ADDITIONAL INFORMATION/REQUIREMENTS.

0' 2' 4' 8' 16'
SCALE: 3/16" = 1'-0"

SHEET KEY NOTES:

1. COORDINATE FINAL INSTALLATION LOCATION WITH OWNER AND ALL OTHER TRADE CONTRACTORS PRIOR TO ROUGH-IN. TYPICAL OF FOUR (4) WALL PACK LIGHTING FIXTURES.
2. CONTRACTOR TO PROVIDE TIME SWITCH AS WATTSTOPPER RT-200 ASTRONOMICAL TIME SWITCH OR APPROVED EQUAL. TIME SWITCH TO CONTROL PROPOSED EXTERIOR LIGHTING FIXTURES TYPE WP1/WP1E. PROGRAM THE SWITCH FOR LIGHTING 'ON' AT ASTRONOMICAL SUNSET AND 'OFF' AT ASTRONOMICAL SUN RISE. FINAL ON/OFF PARAMETERS TO BE COORDINATED WITH THE OWNER.

MHE ENGINEERING
33 Airport Center Drive, Suite 202
New Windsor, NY 12553
(845) 567-3100
111 Wheatfield Drive, Suite 1
Milford, PA 18337
(570) 296-2765

BID ADDENDUM

JADE STONE ENGINEERING

STATE OF NEW YORK
JEFFREY E ROBINSON
095896
LICENSED PROFESSIONAL ENGINEER

HAZARDOUS MATERIAL NOTE:
THE SERVICES PROVIDED BY MHE, INCLUDING ALL WORK DEPICTED ON MHE PLANS, DO NOT INCLUDE SERVICES RELATED TO THE IDENTIFICATION, CONTROLS OR HANDLING OF HAZARDOUS MATERIALS, INCLUDING SUCH MATERIALS AS ASBESTOS AND LEAD PAINT. ALL TESTING, IDENTIFICATION, ABATEMENT, CONTROLS, AND HANDLING OF HAZARDOUS MATERIALS SHALL BE UNDERTAKEN BY A HAZARDOUS MATERIAL CONSULTANT AND CERTIFIED PROFESSIONALS. IF SUCH MATERIALS HAVE BEEN IDENTIFIED, CONTRACTOR WILL COMMUNICATE DIRECTLY WITH HAZARDOUS MATERIAL PROFESSIONAL FOR THE PERFORMANCE OF ANY WORK ON OR ADJACENT TO SAID MATERIALS. IF UNIDENTIFIED MATERIALS OF CONCERN ARE ENCOUNTERED WHILE UNDERTAKING THE WORK SHOWN HEREON, CONTRACTOR SHALL IMMEDIATELY NOTIFY ENGINEER AND OWNER, AND SHALL OBTAIN DIRECTION FROM THE HAZARDOUS MATERIAL CONSULTANT PRIOR TO THE CONTINUATION OF WORK INVOLVING SUSPECTED MATERIAL.

UDIG·NY SAFE DIGGING STARTS HERE
CALL 811

UNAUTHORIZED ADDITION OR ALTERATION OF THIS PLAN IS A VIOLATION OF SECTION 7209(2) OF THE NEW YORK STATE EDUCATION LAW.

ALL PRODUCTION & INTELLECTUAL PROPERTY RIGHT RESERVED ©

CAESARS LANE WWTP EXPANSION PROJECT: PHASE 2
145 CAESARS LN.
NEW WINDSOR, NY 12553
FOR TOWN OF NEW WINDSOR
555 UNION AVE.
NEW WINDSOR, NY 12553

ELECTRICAL LIGHTING PLAN - ATAD BUILDING

REVISIONS

NO.	DESCRIPTION	DATE

ISSUED DATE:	06 JUNE, 2025
DESIGN BY:	RRM
DRAWN BY:	CDJ
CHECKED BY:	MGR
REVIEWED BY:	JER

SHEET NO.
E-401

PROJECT # 18-732 PHASE #

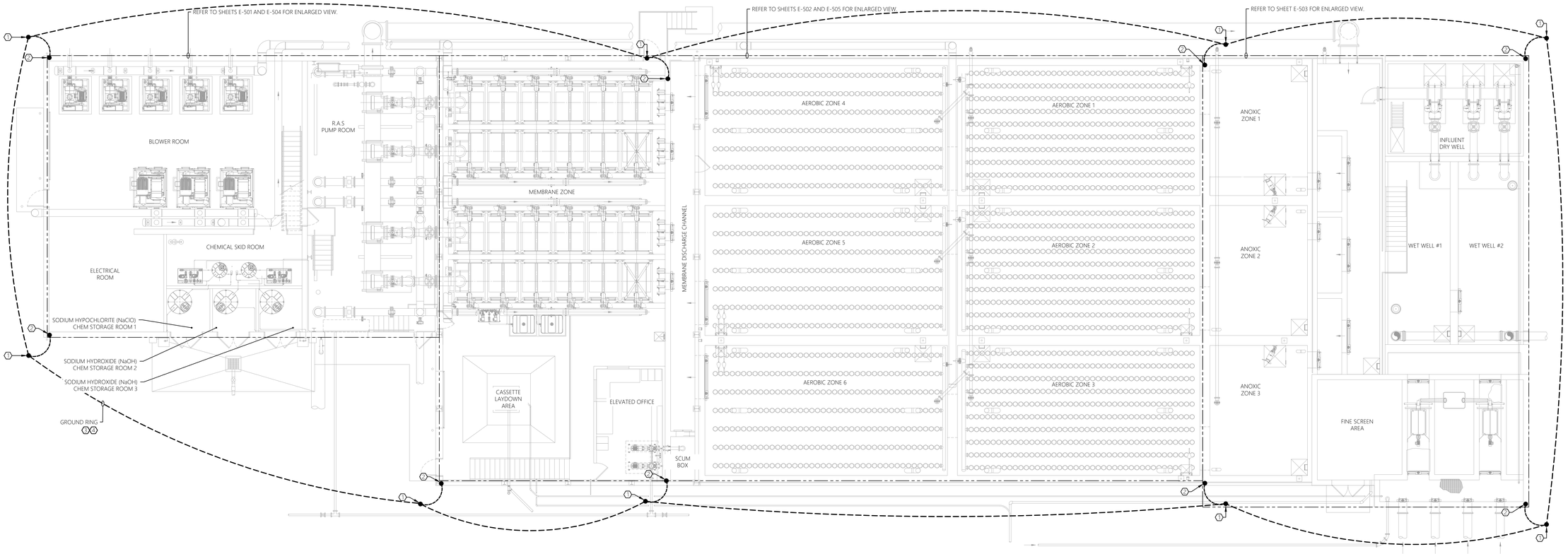

1 E-500 ELECTRICAL OVERALL PLAN
SCALE: 1/8" = 1'-0" MBR BUILDING 1ST FLOOR

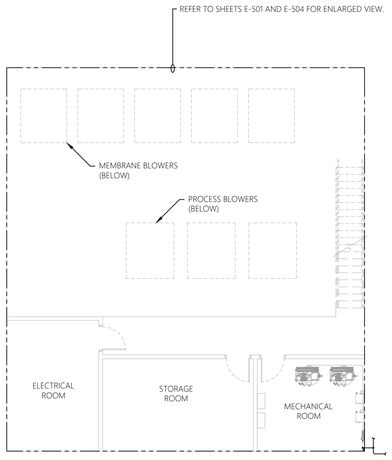

2 E-500 ELECTRICAL OVERALL PLAN
SCALE: 1/8" = 1'-0" MBR BUILDING 2ND FLOOR

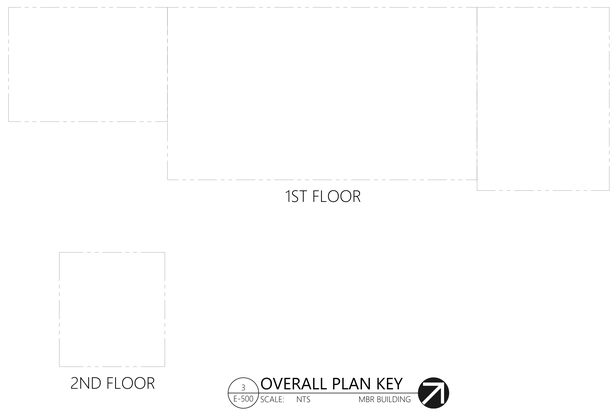

3 E-500 OVERALL PLAN KEY
SCALE: NTS MBR BUILDING

GENERAL NEW WORK NOTES:

1. REFER TO E-001 FOR ELECTRICAL LEGENDS, ABBREVIATIONS AND GENERAL PROJECT NOTES.
2. PROVIDE A DEDICATED GROUNDING CONDUCTOR FOR ALL ELECTRICAL EQUIPMENT AND ASSOCIATED EQUIPMENT AND DEVICES.
3. EQUIPMENT & DEVICE LOCATIONS ARE SHOWN AS GENERAL IN NATURE. REFER TO MECHANICAL, PROCESS AND HVAC DRAWINGS FOR EXACT LOCATIONS.
4. ALL PROPOSED EQUIPMENT LOCATIONS/INSTALLATIONS TO COMPLY WITH NEC ARTICLE 110.26 'SPACES ABOUT ELECTRICAL EQUIPMENT'. CONTRACTOR TO COORDINATE INSTALLATION LOCATIONS OF ALL EQUIPMENT WITH ALL OTHER TRADE CONTRACTORS PRIOR TO ROUGH IN.
5. CONTRACTOR RESPONSIBLE FOR MOUNTING OF ALL CONTROL PANELS, CONTROLLERS, TRANSMITTERS, ETC... THAT ARE FURNISHED AS PART OF THIS PROJECT (INCLUDING GENERAL CONTRACTOR). PROVIDE ALL NECESSARY MOUNTING HARDWARE/EQUIPMENT. ALL MOUNTING HARDWARE/EQUIPMENT TO BE STAINLESS STEEL. REFERENCE TYPICAL MOUNTING DETAILS FOR ADDITIONAL INFORMATION.
6. REFER TO ELECTRICAL SINGLE LINE DIAGRAM, SCHEDULES, AND DETAILS FOR ADDITIONAL INFORMATION/REQUIREMENTS.
7. CONTRACTOR TO COORDINATE ALL ASPECTS OF SEQUENCE OF CONSTRUCTION WITH OWNER AND GENERAL CONTRACTOR.
8. ALL EXTERIOR RECEPTACLES TO BE INSTALLED AT A HEIGHT OF 36" A.F.G. ALL INTERIOR RECEPTACLES TO BE INSTALLED AT A HEIGHT OF 24" A.F.F. UNLESS NOTED OTHERWISE.
9. CONTRACTOR TO PROVIDE LABEL FOR ALL PROPOSED ELECTRICAL EQUIPMENT AND DEVICES. COORDINATE FINAL LABELING REQUIREMENTS WITH THE OWNER AND ALL OTHER TRADE CONTRACTORS.
10. COORDINATE CONDUIT PENETRATION LOCATIONS THRU EXTERIOR BUILDING WALLS CLOSELY WITH GENERAL CONTRACTOR PRIOR TO PERFORMING WORK.

0' 2' 4' 8' 16'
SCALE: 1/8" = 1'-0"

SHEET KEY NOTE:

1. CONTRACTOR TO PROVIDE 3/4"Ø x 10' COPPER GROUND ROD. BOND ALL METALLIC STRUCTURES AND LIGHTING PROTECTION DOWN CONDUCTOR TO GROUND ROD USING #400 COPPER CONDUCTOR WITHIN PVC CONDUIT. REFER TO TYPICAL LIGHTNING PROTECTION GROUNDING DETAILS AND TYPICAL PANEL GROUNDING DETAIL FOR ADDITIONAL INFORMATION/REQUIREMENTS.
2. LIGHTNING PROTECTION DOWN CONDUCTOR. CONCEAL IN PVC CONDUIT WITHIN EXTERIOR WALL CONSTRUCTION. CONTRACTOR TO WORK WITH CERTIFIED LIGHTNING PROTECTION INSTALLER TO PROVIDE COMPLETE BUILDING LIGHTNING PROTECTION SYSTEM IN ACCORDANCE WITH NFPA. UPON COMPLETION PROVIDE UL MASTER LABEL. REFER TO LIGHTNING PROTECTION FOR STRUCTURES SPECIFICATIONS FOR REQUIREMENTS AND ADDITIONAL INFORMATION.
3. GROUND RING. GROUND RING TO BE BURIED AT MINIMUM 3 FEET BELOW FINISHED GRADE. GROUND RING TO BE KEPT AT MINIMUM OF 3 FEET AWAY FROM BUILDING AT ALL TIMES. PROVIDE AND INSTALL 3/4"Ø x 10' GROUND RODS AT EACH CORNER OF GROUND RING FOR A TOTAL OF NINE (9) GROUND RODS. ALL GROUND CONDUCTORS SHALL BE #400 COPPER, U.O.N.
4. CONTRACTOR TO ADDITIONALLY BOND GROUND RING TO ADJACENT BUILDING GROUND SYSTEM. UTILIZE #400 COPPER GROUND CONDUCTOR.

MHE ENGINEERING
33 Airport Center Drive, Suite 202
New Windsor, NY 12553
(845) 567-3100
111 Wheatfield Drive, Suite 1
Milford, PA 18337
(570) 296-2765

BID ADDENDUM

JADE STONE ENGINEERING

STATE OF NEW YORK · JEFFREY E. ROBINSON · 095896 · LICENSED PROFESSIONAL ENGINEER

HAZARDOUS MATERIAL NOTE:

THE SERVICES PROVIDED BY MHE, INCLUDING ALL WORK DEPICTED ON MHE PLANS, DO NOT INCLUDE SERVICES RELATED TO THE IDENTIFICATION, CONTROLS OR HANDLING OF HAZARDOUS MATERIALS, INCLUDING SUCH MATERIALS AS ASBESTOS AND LEAD PAINT. ALL TESTING, IDENTIFICATION, ABATEMENT, CONTROLS, AND HANDLING OF HAZARDOUS MATERIALS SHALL BE UNDERTAKEN BY A HAZARDOUS MATERIAL CONSULTANT AND CERTIFIED PROFESSIONALS. IF SUCH MATERIALS HAVE BEEN IDENTIFIED, CONTRACTOR WILL COMMUNICATE DIRECTLY WITH HAZARDOUS MATERIAL PROFESSIONAL FOR THE PERFORMANCE OF ANY WORK ON OR ADJACENT TO SAID MATERIALS. IF UNIDENTIFIED MATERIALS OF CONCERN ARE ENCOUNTERED WHILE UNDERTAKING THE WORK SHOWN HEREON, CONTRACTOR SHALL IMMEDIATELY NOTIFY ENGINEER AND OWNER, AND SHALL OBTAIN DIRECTION FROM THE HAZARDOUS MATERIAL CONSULTANT PRIOR TO THE CONTINUATION OF WORK INVOLVING SUSPECTED MATERIAL.

UDIG·NY SAFE DIGGING STARTS HERE
CALL 811

UNAUTHORIZED ADDITION OR ALTERATION OF THIS PLAN IS A VIOLATION OF SECTION 7209(2) OF THE NEW YORK STATE EDUCATION LAW.

ALL PRODUCTION & INTELLECTUAL PROPERTY RIGHT RESERVED ©

CAESARS LANE WWTP EXPANSION PROJECT: PHASE 2
145 CAESARS LN.
NEW WINDSOR, NY 12553
FOR TOWN OF NEW WINDSOR
555 UNION AVE.
NEW WINDSOR, NY 12553

ELECTRICAL OVERALL PLAN - MBR BUILDING

REVISIONS

NO.	DESCRIPTION	DATE

ISSUED DATE:	06 JUNE, 2025
DESIGN BY:	RRM
DRAWN BY:	CDJ
CHECKED BY:	MGR
REVIEWED BY:	JER

SHEET NO.
E-500

PROJECT # 18-732 PHASE #

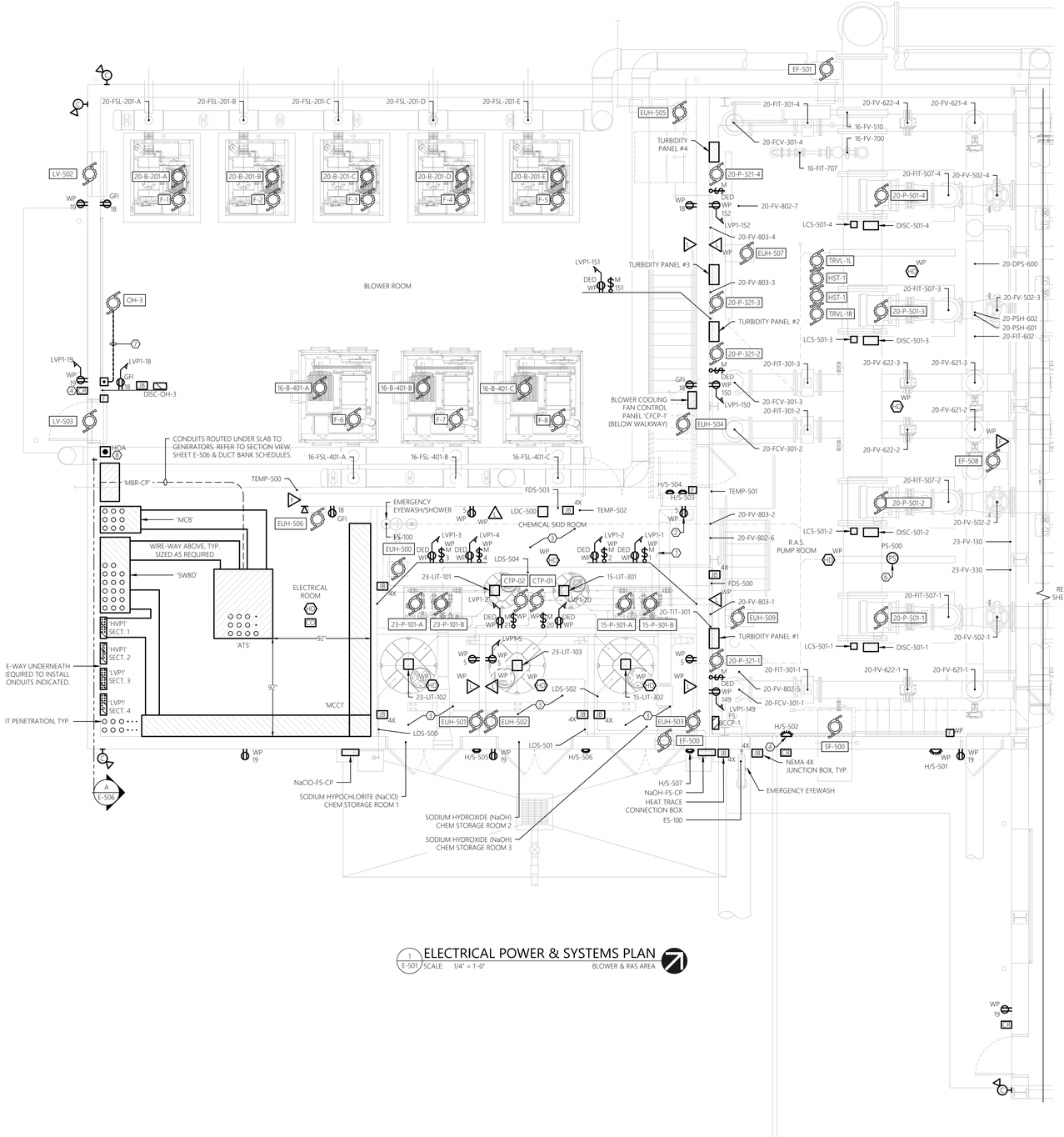

1 E-501 ELECTRICAL POWER & SYSTEMS PLAN
SCALE: 1/4" = 1'-0" BLOWER & RAS AREA

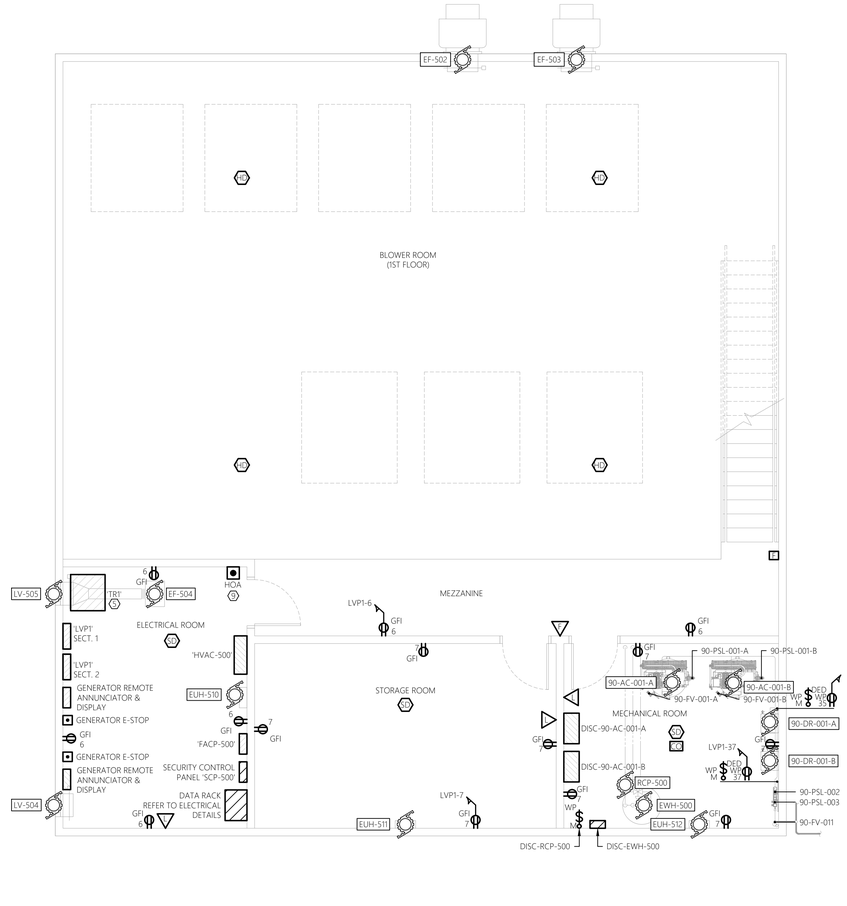

2 E-501 ELECTRICAL POWER & SYSTEMS PLAN
SCALE: 1/4" = 1'-0" 2ND FLOOR

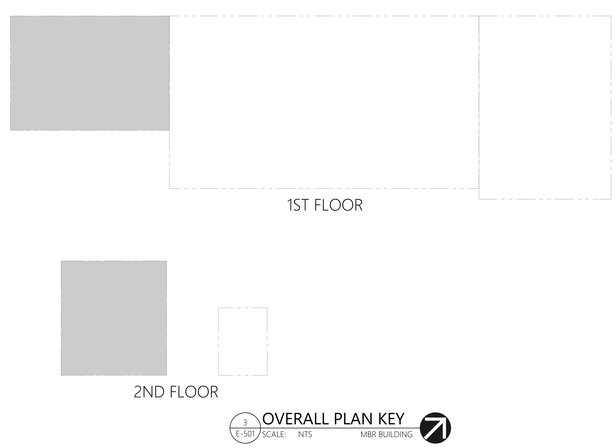

3 E-501 OVERALL PLAN KEY
SCALE: NTS MBR BUILDING

GENERAL NEW WORK NOTES:

1. REFER TO E-001 FOR ELECTRICAL LEGENDS, ABBREVIATIONS AND GENERAL PROJECT NOTES.
2. PROVIDE A DEDICATED GROUNDING CONDUCTOR FOR ALL ELECTRICAL EQUIPMENT AND ASSOCIATED EQUIPMENT AND DEVICES.
3. EQUIPMENT & DEVICE LOCATIONS ARE SHOWN AS GENERAL IN NATURE. REFER TO MECHANICAL, PROCESS AND HVAC DRAWINGS FOR EXACT LOCATIONS.
4. ALL PROPOSED EQUIPMENT LOCATIONS/INSTALLATIONS TO COMPLY WITH NEC ARTICLE 110.26 'SPACES ABOUT ELECTRICAL EQUIPMENT'. CONTRACTOR TO COORDINATE INSTALLATION LOCATIONS OF ALL EQUIPMENT WITH ALL OTHER TRADE CONTRACTORS PRIOR TO ROUGH IN.
5. CONTRACTOR RESPONSIBLE FOR MOUNTING OF ALL CONTROL PANELS, CONTROLLERS, TRANSMITTERS, ETC... THAT ARE FURNISHED AS PART OF THIS PROJECT (INCLUDING GENERAL CONTRACTOR). PROVIDE ALL NECESSARY MOUNTING HARDWARE/EQUIPMENT. ALL MOUNTING HARDWARE/EQUIPMENT TO BE STAINLESS STEEL. REFERENCE TYPICAL MOUNTING DETAILS FOR ADDITIONAL INFORMATION.
6. REFER TO ELECTRICAL SINGLE LINE DIAGRAM, SCHEDULES, AND DETAILS FOR ADDITIONAL INFORMATION/REQUIREMENTS.
7. CONTRACTOR TO COORDINATE ALL ASPECTS OF SEQUENCE OF CONSTRUCTION WITH OWNER AND ALL OTHER TRADE CONTRACTORS.
8. ALL EXTERIOR RECEPTACLES TO BE INSTALLED AT A HEIGHT OF 36" A.F.G. ALL INTERIOR RECEPTACLES TO BE INSTALLED AT A HEIGHT OF 24" A.F.F. UNLESS NOTED OTHERWISE.
9. CONTRACTOR TO PROVIDE LABEL FOR ALL PROPOSED ELECTRICAL EQUIPMENT AND DEVICES. COORDINATE FINAL LABELING REQUIREMENTS WITH THE OWNER AND ALL OTHER TRADE CONTRACTORS.
10. COORDINATE CONDUIT PENETRATION LOCATIONS THRU EXTERIOR BUILDING WALLS CLOSELY WITH GENERAL CONTRACTOR PRIOR TO PERFORMING WORK.
11. REFER TO DATA DETAILS FOR COMMUNICATION SCOPE OF WORK.

0' 2' 4' 8'
SCALE: 1/4" = 1'-0"

SHEET KEY NOTES:

1. EACH CHEMICAL PUMP TO BE PROVIDED WITH A SWITCHED RECEPTACLE FOR ON/OFF CONTROL OF CHEMICAL PUMP. REFER TO EQUIPMENT CONNECTION SCHEDULE FOR ADDITIONAL INFORMATION. TYPICAL.
2. ALL RECEPTACLES WITHIN CHEMICAL ROOM TO BE PROVIDED WITH PVC COATED BOX AND COVER SYSTEM. TYPICAL.
3. CHEMICAL ROOM INTERIOR IS A CORROSIVE ENVIRONMENT. ALL ELECTRICAL EQUIPMENT, WIRING METHODS, AND DEVICES INTERIOR TO THE CHEMICAL ROOM TO BE OF CORROSION RESISTANT MATERIALS/METHODS. UTILIZE NEMA 4X (NON-METALLIC) ENCLOSURES FOR DISCONNECTS AND LOCAL CONTROL STATIONS. UTILIZED TITANIUM FOR ALL SUPPORTS, ANCHORS, AND FASTENERS.
4. HVAC MONITORING SYSTEM ALARM HORN/STROBES. INSTALL DEVICES (HORN/STROBES) AT 8'-0" ABOVE FINISHED FLOOR/GRADE. REFER TO RISER DIAGRAM FOR ADDITIONAL INFORMATION/REQUIREMENTS.
5. CONTRACTOR TO PROVIDE CONCRETE EQUIPMENT PAD. REFER TO TYPICAL EQUIPMENT PAD DETAIL.
6. PRESSURE SENSOR FOR MONITORING. COORDINATE FINAL CIRCUITRY REQUIREMENTS WITH THE HVAC CONTRACTOR. CONNECT TO 'HVAC-500'.
7. PROVIDE LOW VOLTAGE CONDUCTORS IN 1/2" CONDUIT PER MANUFACTURERS RECOMMENDATIONS FOR AN OVERALL COMPLETE AND OPERABLE SYSTEM. COORDINATE FINAL REQUIREMENTS WITH ALL OTHER TRADE CONTRACTORS AND THE OWNER.
8. CONTRACTOR TO PROVIDE HAND-OFF-AUTO (H-O-A) SWITCH FOR CONTROL OF EXHAUST FANS 'EF-502' AND 'EF-503' AND LOUVERS 'LV-502' AND 'LV-503'. IN HAND MODE FAN IS TO BE ON. IN OFF MODE FAN IS TO BE OFF. IN AUTO MODE FAN IS TO OPERATE VIA REVERSE ACTING THERMOSTAT. CONTRACTOR IS RESPONSIBLE FOR PROVIDING ALL NECESSARY INTERLOCK CIRCUITRY. PROVIDE CONTROL POWER TRANSFORMER AND ENCLOSURE AS REQUIRED TO OBTAIN NECESSARY VOLTAGE FOR THERMOSTAT. REFER TO HVAC DRAWINGS AND COORDINATE WITH APPLICABLE TRADE CONTRACTORS FOR THERMOSTAT LOCATIONS AND FINAL REQUIREMENTS.
9. CONTRACTOR TO PROVIDE HAND-OFF-AUTO (H-O-A) SWITCH FOR CONTROL OF EXHAUST FAN 'EF-504' AND LOUVERS 'LV-504' AND 'LV-505'. IN HAND MODE FAN IS TO BE ON. IN OFF MODE FAN IS TO BE OFF. IN AUTO MODE FAN IS TO OPERATE VIA REVERSE ACTING THERMOSTAT. CONTRACTOR IS RESPONSIBLE FOR PROVIDING ALL NECESSARY INTERLOCK CIRCUITRY. PROVIDE CONTROL POWER TRANSFORMER AND ENCLOSURE AS REQUIRED TO OBTAIN NECESSARY VOLTAGE FOR THERMOSTAT. REFER TO HVAC DRAWINGS AND COORDINATE WITH APPLICABLE TRADE CONTRACTORS FOR THERMOSTAT LOCATIONS AND FINAL REQUIREMENTS.

MHE ENGINEERING
33 Airport Center Drive, Suite 202
New Windsor, NY 12553
(845) 587-3100
111 Wheatfield Drive, Suite 1
Milford, PA 18337
(570) 296-2765

BID ADDENDUM

JADE STONE ENGINEERING

STATE OF NEW YORK · JEFFREY E. ROBINSON · 095896 · LICENSED PROFESSIONAL ENGINEER

HAZARDOUS MATERIAL NOTE:

THE SERVICES PROVIDED BY MHE, INCLUDING ALL WORK DEPICTED ON MHE PLANS, DO NOT INCLUDE SERVICES RELATED TO THE IDENTIFICATION, CONTROLS OR HANDLING OF HAZARDOUS MATERIALS, INCLUDING SUCH MATERIALS AS ASBESTOS AND LEAD PAINT. ALL TESTING, IDENTIFICATION, ABATEMENT, CONTROLS, AND HANDLING OF HAZARDOUS MATERIALS SHALL BE UNDERTAKEN BY A HAZARDOUS MATERIAL CONSULTANT AND CERTIFIED PROFESSIONALS. IF SUCH MATERIALS HAVE BEEN IDENTIFIED, CONTRACTOR WILL COMMUNICATE DIRECTLY WITH HAZARDOUS MATERIAL PROFESSIONAL FOR THE PERFORMANCE OF ANY WORK ON OR ADJACENT TO SAID MATERIALS. IF UNIDENTIFIED MATERIALS OF CONCERN ARE ENCOUNTERED WHILE UNDERTAKING THE WORK SHOWN HEREON, CONTRACTOR SHALL IMMEDIATELY NOTIFY ENGINEER AND OWNER, AND SHALL OBTAIN DIRECTION FROM THE HAZARDOUS MATERIAL CONSULTANT PRIOR TO THE CONTINUATION OF WORK INVOLVING SUSPECTED MATERIAL.

UDIG·NY SAFE DIGGING STARTS HERE
CALL 811

UNAUTHORIZED ADDITION OR ALTERATION OF THIS PLAN IS A VIOLATION OF SECTION 7209(2) OF THE NEW YORK STATE EDUCATION LAW.

ALL PRODUCTION & INTELLECTUAL PROPERTY RIGHT RESERVED ©

CAESARS LANE WWTP EXPANSION PROJECT: PHASE 2
145 CAESARS LN.
NEW WINDSOR, NY 12553
FOR TOWN OF NEW WINDSOR
555 UNION AVE.
NEW WINDSOR, NY 12553

ELECTRICAL POWER & SYSTEMS PLAN - BLOWER & RAS AREA

REVISIONS

NO.	DESCRIPTION	DATE

ISSUED DATE:	06 JUNE, 2025
DESIGN BY:	RRM
DRAWN BY:	CDJ
CHECKED BY:	MGR
REVIEWED BY:	JER
SHEET NO.	E-501
PROJECT # 18-732	PHASE #

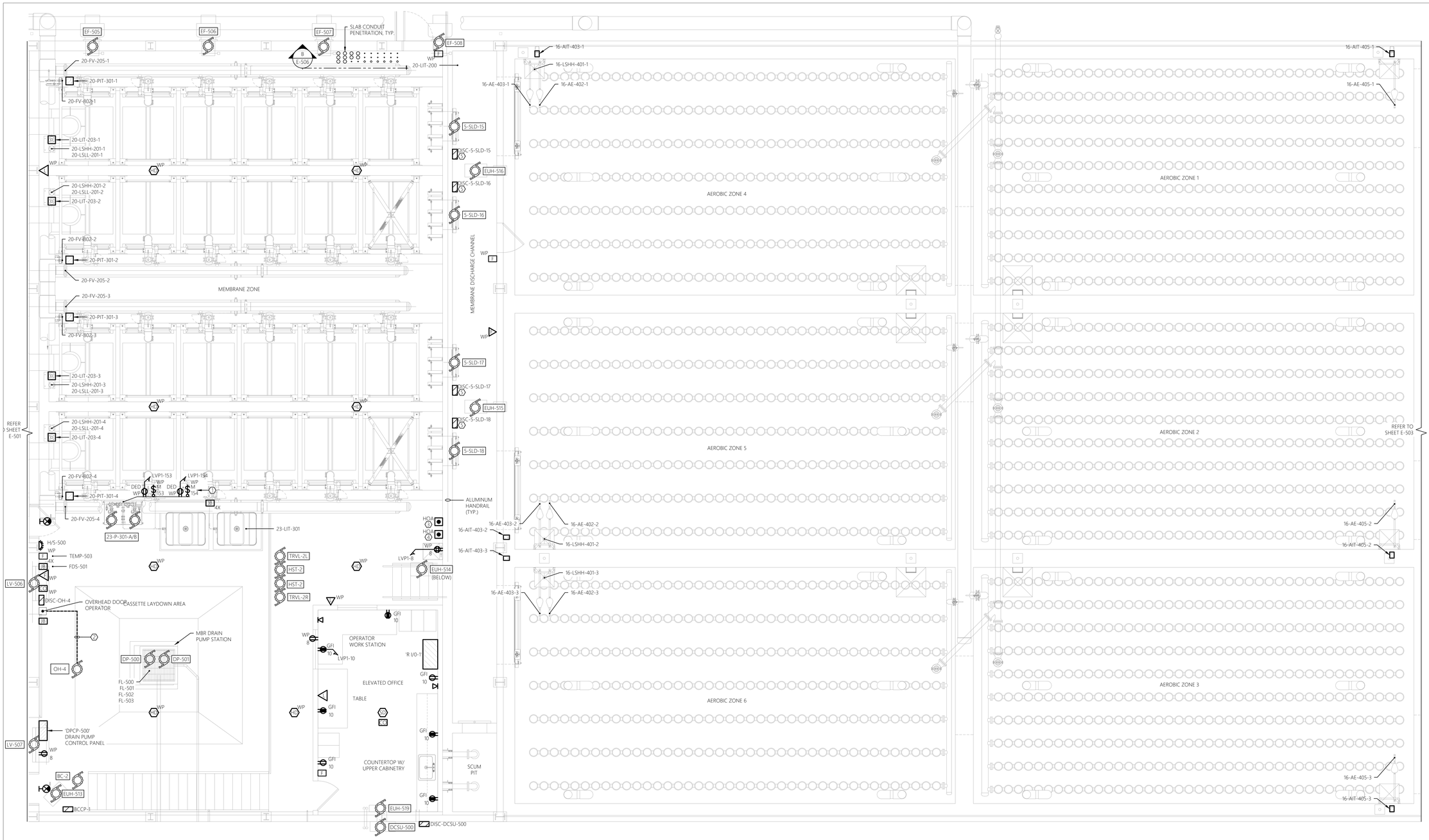

GENERAL NEW WORK NOTES:

1. REFER TO E-001 FOR ELECTRICAL LEGENDS, ABBREVIATIONS AND GENERAL PROJECT NOTES.
2. PROVIDE A DEDICATED GROUNDING CONDUCTOR FOR ALL ELECTRICAL EQUIPMENT AND ASSOCIATED EQUIPMENT AND DEVICES.
3. EQUIPMENT & DEVICE LOCATIONS ARE SHOWN AS GENERAL IN NATURE. REFER TO MECHANICAL, PROCESS AND HVAC DRAWINGS FOR EXACT LOCATIONS.
4. ALL PROPOSED EQUIPMENT LOCATIONS/INSTALLATIONS TO COMPLY WITH NEC ARTICLE 110.26 'SPACES ABOUT ELECTRICAL EQUIPMENT'. CONTRACTOR TO COORDINATE INSTALLATION LOCATIONS OF ALL EQUIPMENT WITH ALL OTHER TRADE CONTRACTORS PRIOR TO ROUGH IN.
5. CONTRACTOR RESPONSIBLE FOR MOUNTING OF ALL CONTROL PANELS, CONTROLLERS, TRANSMITTERS, ETC... THAT ARE FURNISHED AS PART OF THIS PROJECT (INCLUDING GENERAL CONTRACTOR). PROVIDE ALL NECESSARY MOUNTING HARDWARE/EQUIPMENT. ALL MOUNTING HARDWARE/EQUIPMENT TO BE STAINLESS STEEL. REFERENCE TYPICAL MOUNTING DETAILS FOR ADDITIONAL INFORMATION.
6. REFER TO ELECTRICAL SINGLE LINE DIAGRAM, SCHEDULES, AND DETAILS FOR ADDITIONAL INFORMATION/REQUIREMENTS.
7. CONTRACTOR TO COORDINATE ALL ASPECTS OF SEQUENCE OF CONSTRUCTION WITH OWNER AND ALL OTHER TRADE CONTRACTORS.
8. ALL EXTERIOR RECEPTACLES TO BE INSTALLED AT A HEIGHT OF 36" A.F.G. ALL INTERIOR RECEPTACLES TO BE INSTALLED AT A HEIGHT OF 24" A.F.F. UNLESS NOTED OTHERWISE.
9. CONTRACTOR TO PROVIDE LABEL FOR ALL PROPOSED ELECTRICAL EQUIPMENT AND DEVICES. COORDINATE FINAL LABELING REQUIREMENTS WITH THE OWNER AND ALL OTHER TRADE CONTRACTORS.
10. COORDINATE CONDUIT PENETRATION LOCATIONS THRU EXTERIOR BUILDING WALLS CLOSELY WITH GENERAL CONTRACTOR PRIOR TO PERFORMING WORK.
11. REFER TO DATA DETAILS FOR COMMUNICATION SCOPE OF WORK.

SHEET KEY NOTES:

1. EACH CHEMICAL PUMP TO BE PROVIDED WITH A SWITCHED RECEPTACLE FOR ON/OFF CONTROL OF CHEMICAL PUMP. REFER TO EQUIPMENT CONNECTION SCHEDULE FOR ADDITIONAL INFORMATION. TYPICAL.
2. PROVIDE LOW VOLTAGE CONDUCTORS IN 1/2" CONDUIT PER MANUFACTURERS RECOMMENDATIONS FOR AN OVERALL COMPLETE AND OPERABLE SYSTEM. COORDINATE FINAL REQUIREMENTS WITH ALL OTHER TRADE CONTRACTORS AND THE OWNER.
3. CONTRACTOR TO PROVIDE HAND-OFF-AUTO (H-O-A) SWITCH FOR CONTROL OF EXHAUST FANS 'EF-505' AND 'EF-506' AND LOUVER 'LV-506'. IN HAND MODE FAN IS TO BE ON. IN OFF MODE FAN IS TO BE OFF. IN AUTO MODE FAN IS TO OPERATE VIA REVERSE ACTING THERMOSTAT. CONTRACTOR IS RESPONSIBLE FOR PROVIDING ALL NECESSARY INTERLOCK CIRCUITRY. PROVIDE CONTROL POWER TRANSFORMER AND ENCLOSURE AS REQUIRED TO OBTAIN NECESSARY VOLTAGE FOR THERMOSTAT. REFER TO HVAC DRAWINGS AND COORDINATE WITH APPLICABLE TRADE CONTRACTORS FOR THERMOSTAT LOCATIONS AND FINAL REQUIREMENTS.
4. CONTRACTOR TO PROVIDE HAND-OFF-AUTO (H-O-A) SWITCH FOR CONTROL OF EXHAUST FANS 'EF-507' AND 'EF-508' AND LOUVER 'LV-507'. IN HAND MODE FAN IS TO BE ON. IN OFF MODE FAN IS TO BE OFF. IN AUTO MODE FAN IS TO OPERATE VIA REVERSE ACTING THERMOSTAT. CONTRACTOR IS RESPONSIBLE FOR PROVIDING ALL NECESSARY INTERLOCK CIRCUITRY. PROVIDE CONTROL POWER TRANSFORMER AND ENCLOSURE AS REQUIRED TO OBTAIN NECESSARY VOLTAGE FOR THERMOSTAT. REFER TO HVAC DRAWINGS AND COORDINATE WITH APPLICABLE TRADE CONTRACTORS FOR THERMOSTAT LOCATIONS AND FINAL REQUIREMENTS.
5. CONTRACTOR TO PROVIDE ALL REQUIRED STAINLESS STEEL UNISTRUT AND ASSOCIATED MOUNTING BRACKETS, ACCESSORIES, ETC... TO MOUNT ELECTRICAL EQUIPMENT TO HANDRAIL. COORDINATE FINAL LOCATION WITH OWNER AND APPLICABLE TRADE CONTRACTORS. ALL REQUIREMENTS TO BE PER NEC.

1 E-502 ELECTRICAL POWER & SYSTEMS PLAN
SCALE: 1/4" = 1'-0" MEMBRANE & AEROBIC ZONES

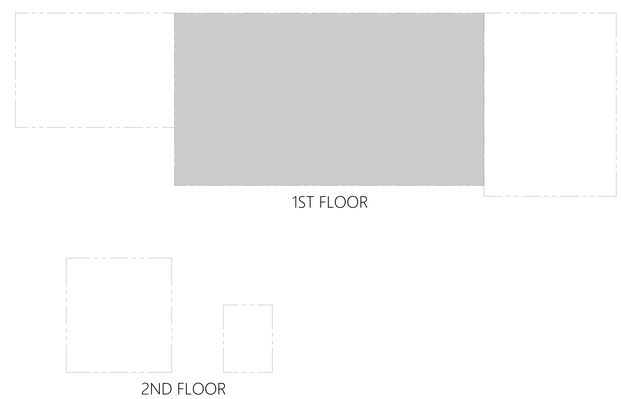

2 E-502 OVERALL PLAN KEY
SCALE: NTS MBR BUILDING

0' 2' 4' 8'
SCALE: 1/4" = 1'-0"

MHE ENGINEERING
33 Airport Center Drive, Suite 202
New Windsor, NY 12553
(845) 587-3100
111 Wheatfield Drive, Suite 1
Milford, PA 18337
(570) 296-2765

BID ADDENDUM

JADE STONE ENGINEERING

STATE OF NEW YORK
JEFFREY E ROBINSON
095896
LICENSED PROFESSIONAL ENGINEER

HAZARDOUS MATERIAL NOTE:

THE SERVICES PROVIDED BY MHE, INCLUDING ALL WORK DEPICTED ON MHE PLANS, DO NOT INCLUDE SERVICES RELATED TO THE IDENTIFICATION, CONTROLS OR HANDLING OF HAZARDOUS MATERIALS, INCLUDING SUCH MATERIALS AS ASBESTOS AND LEAD PAINT. ALL TESTING, IDENTIFICATION, ABATEMENT, CONTROLS, AND HANDLING OF HAZARDOUS MATERIALS SHALL BE UNDERTAKEN BY A HAZARDOUS MATERIAL CONSULTANT AND CERTIFIED PROFESSIONALS. IF SUCH MATERIALS HAVE BEEN IDENTIFIED, CONTRACTOR WILL COMMUNICATE DIRECTLY WITH HAZARDOUS MATERIAL PROFESSIONAL FOR THE PERFORMANCE OF ANY WORK ON OR ADJACENT TO SAID MATERIALS. IF UNIDENTIFIED MATERIALS OF CONCERN ARE ENCOUNTERED WHILE UNDERTAKING THE WORK SHOWN HEREON, CONTRACTOR SHALL IMMEDIATELY NOTIFY ENGINEER AND OWNER, AND SHALL OBTAIN DIRECTION FROM THE HAZARDOUS MATERIAL CONSULTANT PRIOR TO THE CONTINUATION OF WORK INVOLVING SUSPECTED MATERIAL.

UDIG·NY SAFE DIGGING STARTS HERE
CALL 811

UNAUTHORIZED ADDITION OR ALTERATION OF THIS PLAN IS A VIOLATION OF SECTION 7209(2) OF THE NEW YORK STATE EDUCATION LAW.

ALL PRODUCTION & INTELLECTUAL PROPERTY RIGHT RESERVED ©

CAESARS LANE WWTP EXPANSION PROJECT: PHASE 2
145 CAESARS LN.
NEW WINDSOR, NY 12553
FOR TOWN OF NEW WINDSOR
555 UNION AVE.
NEW WINDSOR, NY 12553

ELECTRICAL POWER & SYSTEMS PLAN - MEMBRANE & AEROBIC AREA

REVISIONS

NO.	DESCRIPTION	DATE

ISSUED DATE:	06 JUNE, 2025
DESIGN BY:	RRM
DRAWN BY:	CDJ
CHECKED BY:	MGR
REVIEWED BY:	JER

SHEET NO.
E-502

PROJECT # 18-732 PHASE #

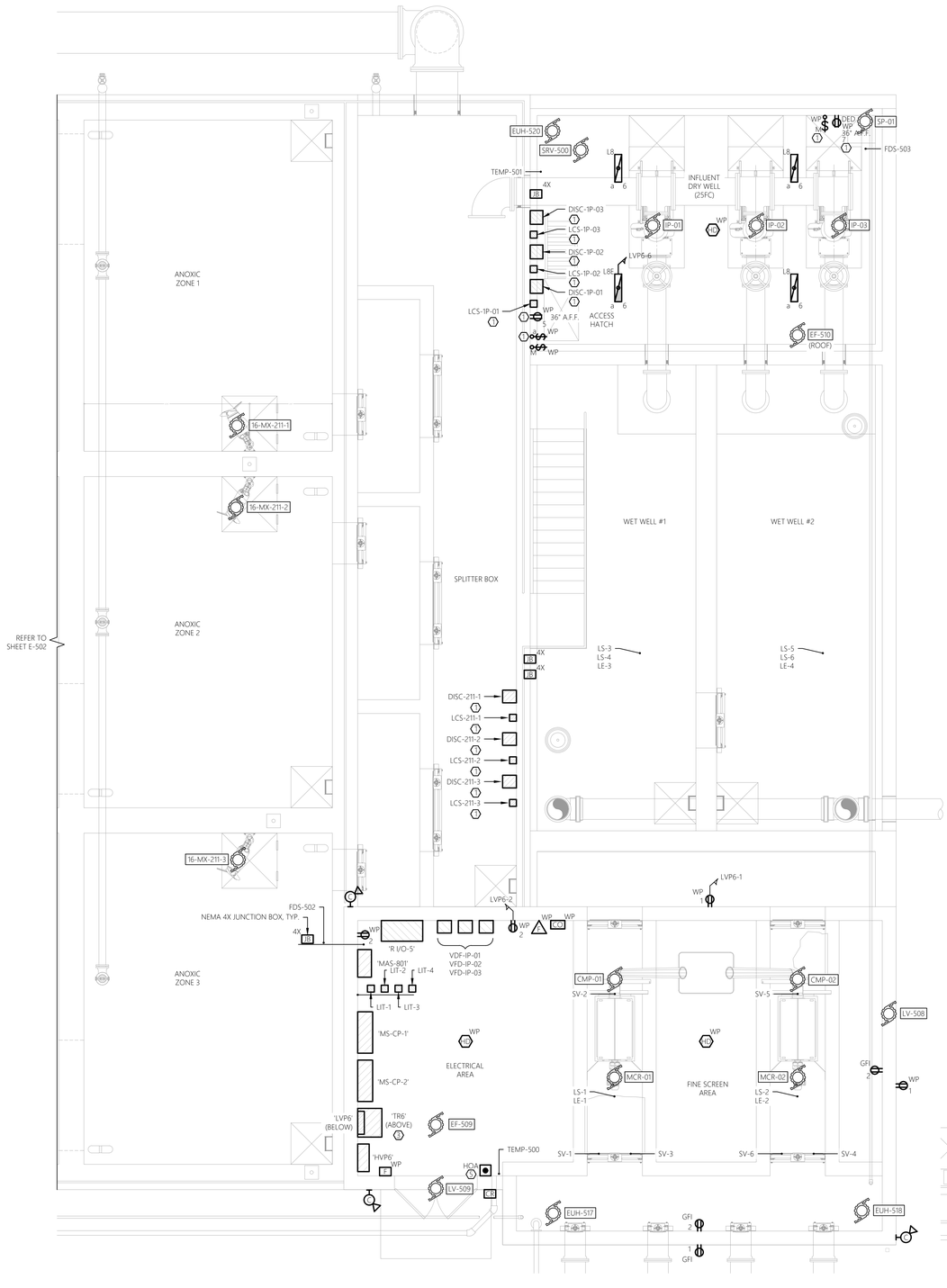

1 E-503 ELECTRICAL POWER & SYSTEMS PLAN
SCALE: 1/4" = 1'-0" SCREENING & INFLUENT AREA

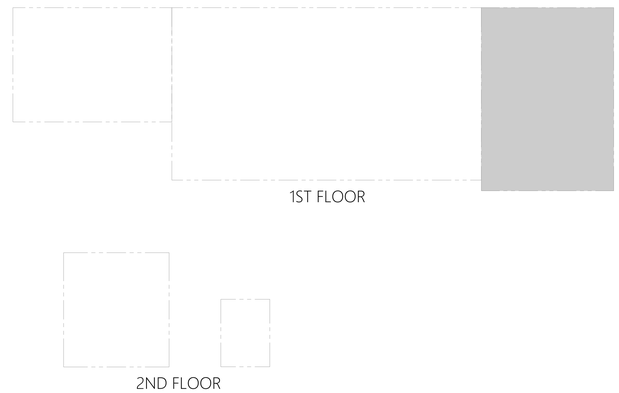

2 E-503 OVERALL PLAN KEY
SCALE: NTS MBR BUILDING

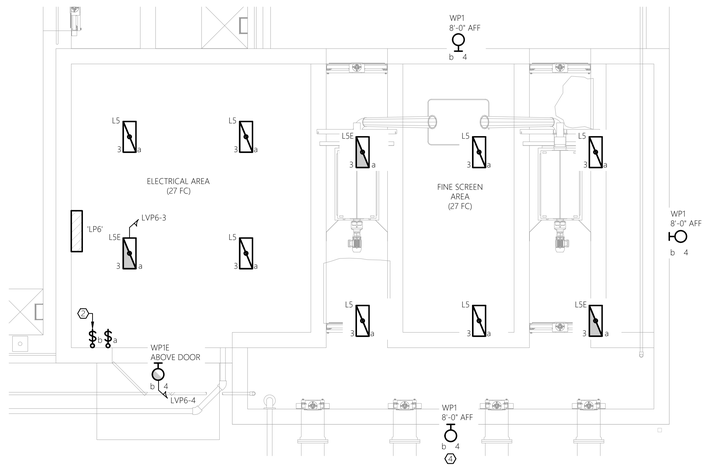

3 E-503 ELECTRICAL LIGHTING PLAN
SCALE: 1/4" = 1'-0" SCREENING & INFLUENT AREA

GENERAL NEW WORK NOTES:

1. REFER TO E-001 FOR ELECTRICAL LEGENDS, ABBREVIATIONS AND GENERAL PROJECT NOTES.
2. PROVIDE A DEDICATED GROUNDING CONDUCTOR FOR ALL ELECTRICAL EQUIPMENT AND ASSOCIATED EQUIPMENT AND DEVICES.
3. EQUIPMENT & DEVICE LOCATIONS ARE SHOWN AS GENERAL IN NATURE. REFER TO MECHANICAL, PROCESS AND HVAC DRAWINGS FOR EXACT LOCATIONS.
4. ALL PROPOSED EQUIPMENT LOCATIONS/INSTALLATIONS TO COMPLY WITH NEC ARTICLE 110.26 'SPACES ABOUT ELECTRICAL EQUIPMENT'. CONTRACTOR TO COORDINATE INSTALLATION LOCATIONS OF ALL EQUIPMENT WITH ALL OTHER TRADE CONTRACTORS PRIOR TO ROUGH IN.
5. CONTRACTOR RESPONSIBLE FOR MOUNTING OF ALL CONTROL PANELS, CONTROLLERS, TRANSMITTERS, ETC... THAT ARE FURNISHED AS PART OF THIS PROJECT (INCLUDING GENERAL CONTRACTOR). PROVIDE ALL NECESSARY MOUNTING HARDWARE/EQUIPMENT. ALL MOUNTING HARDWARE/EQUIPMENT TO BE STAINLESS STEEL. REFERENCE TYPICAL MOUNTING DETAILS FOR ADDITIONAL INFORMATION.
6. REFER TO ELECTRICAL SINGLE LINE DIAGRAM, SCHEDULES, AND DETAILS FOR ADDITIONAL INFORMATION/REQUIREMENTS.
7. CONTRACTOR TO COORDINATE ALL ASPECTS OF SEQUENCE OF CONSTRUCTION WITH OWNER AND APPLICABLE TRADE CONTRACTORS.
8. ALL EXTERIOR RECEPTACLES TO BE INSTALLED AT A HEIGHT OF 36" A.F.G. ALL INTERIOR RECEPTACLES TO BE INSTALLED AT A HEIGHT OF 24" A.F.F. UNLESS NOTED OTHERWISE.
9. CONTRACTOR TO PROVIDE LABEL FOR ALL PROPOSED ELECTRICAL EQUIPMENT AND DEVICES. COORDINATE FINAL LABELING REQUIREMENTS WITH THE OWNER AND ALL OTHER TRADE CONTRACTORS.
10. COORDINATE CONDUIT PENETRATION LOCATIONS THRU EXTERIOR BUILDING WALLS CLOSELY WITH GENERAL CONTRACTOR PRIOR TO PERFORMING WORK.
11. REFER TO DATA DETAILS FOR COMMUNICATION SCOPE OF WORK.
12. CONTRACTOR TO ADJUST FINAL PROPOSED INTERIOR LIGHT FIXTURE LOCATIONS TO AVOID CONFLICTS WITH PROPOSED EQUIPMENT, AND PIPING SYSTEMS.
13. CONTRACTOR TO ADJUST FINAL AIMING ANGLE OF EXTERIOR LIGHT FIXTURES TO LIGHT DESIRED AREAS AND MINIMIZE LIGHT POLLUTION. COORDINATE WITH ALL OTHER TRADE CONTRACTORS. REFER TO THE LUMINAIRE SCHEDULE FOR ADDITIONAL INFORMATION/REQUIREMENTS.

SHEET KEY NOTES:

1. PROVIDE ALL REQUIRED STAINLESS STEEL UNISTRUT, MOUNTING HARDWARE, BRACKETS, SUPPORTS, ACCESSORIES, ETC... FOR STANCHION MOUNTING ABOVE TANK WALKWAY AS SHOWN/INDICATED. COORDINATE WITH ALL OTHER TRADE CONTRACTORS AND INSTALL TO HANDRAIL SYSTEM. TYPICAL.
2. CONTRACTOR TO PROVIDE TIME SWITCH AS WATTSTOPPER RT-200 ASTRONOMICAL TIME SWITCH OR APPROVED EQUAL. TIME SWITCH TO CONTROL PROPOSED EXTERIOR LIGHTING FIXTURES TYPE WP1/WP1E. PROGRAM THE SWITCH FOR LIGHTING 'ON' AT ASTRONOMICAL SUNSET AND 'OFF' AT ASTRONOMICAL SUN RISE. FINAL ON/OFF PARAMETERS TO BE COORDINATED WITH THE OWNER.
3. CONTRACTOR TO PROVIDE WALL MOUNT BRACKETS FOR INSTALLATION ON WALL ABOVE PANEL LVP6.
4. COORDINATE FINAL INSTALLATION LOCATION WITH OWNER AND ALL OTHER TRADE CONTRACTORS PRIOR TO ROUGH-IN. TYPICAL OF FOUR (4) WALL PACK LIGHTING FIXTURES.

   CONTRACTOR TO PROVIDE HAND-OFF-AUTO (H-O-A) SWITCH FOR CONTROL OF EXHAUST FAN 'EF-509' AND LOUVERS 'LV-508' AND 'LV-509'. IN HAND MODE FAN IS TO BE ON. IN OFF MODE FAN IS TO BE OFF. IN AUTO MODE FAN IS TO OPERATE VIA REVERSE ACTING THERMOSTAT. CONTRACTOR IS RESPONSIBLE FOR PROVIDING ALL NECESSARY INTERLOCK CIRCUITRY. PROVIDE CONTROL POWER TRANSFORMER AND ENCLOSURE AS REQUIRED TO OBTAIN NECESSARY VOLTAGE FOR THERMOSTAT. REFER TO HVAC DRAWINGS AND COORDINATE WITH APPLICABLE TRADE CONTRACTORS FOR THERMOSTAT LOCATIONS AND FINAL REQUIREMENTS.

SCALE: 1/4" = 1'-0"

MHE ENGINEERING
33 Airport Center Drive, Suite 202
New Windsor, NY 12553
(845) 567-3100
111 Wheatfield Drive, Suite 1
Milford, PA 18337
(570) 296-2765

BID SET

JADE STONE ENGINEERING

STATE OF NEW YORK · JEFFREY E. ROBINSON · 095896 · LICENSED PROFESSIONAL ENGINEER

HAZARDOUS MATERIAL NOTE:
THE SERVICES PROVIDED BY MHE, INCLUDING ALL WORK DEPICTED ON MHE PLANS, DO NOT INCLUDE SERVICES RELATED TO THE IDENTIFICATION, CONTROLS OR HANDLING OF HAZARDOUS MATERIALS, INCLUDING SUCH MATERIALS AS ASBESTOS AND LEAD PAINT. ALL TESTING, IDENTIFICATION, ABATEMENT, CONTROLS, AND HANDLING OF HAZARDOUS MATERIALS SHALL BE UNDERTAKEN BY A HAZARDOUS MATERIAL CONSULTANT AND CERTIFIED PROFESSIONALS. IF SUCH MATERIALS HAVE BEEN IDENTIFIED, CONTRACTOR WILL COMMUNICATE DIRECTLY WITH HAZARDOUS MATERIAL PROFESSIONAL FOR THE PERFORMANCE OF ANY WORK ON OR ADJACENT TO SAID MATERIALS. IF UNIDENTIFIED MATERIALS OF CONCERN ARE ENCOUNTERED WHILE UNDERTAKING THE WORK SHOWN HEREON, CONTRACTOR SHALL IMMEDIATELY NOTIFY ENGINEER AND OWNER, AND SHALL OBTAIN DIRECTION FROM THE HAZARDOUS MATERIAL CONSULTANT PRIOR TO THE CONTINUATION OF WORK INVOLVING SUSPECTED MATERIAL.

UDIG·NY SAFE DIGGING STARTS HERE
CALL 811

UNAUTHORIZED ADDITION OR ALTERATION OF THIS PLAN IS A VIOLATION OF SECTION 7209(2) OF THE NEW YORK STATE EDUCATION LAW.

ALL PRODUCTION & INTELLECTUAL PROPERTY RIGHT RESERVED ©

CAESARS LANE WWTP EXPANSION PROJECT: PHASE 2
145 CAESARS LN.
NEW WINDSOR, NY 12553
FOR TOWN OF NEW WINDSOR
555 UNION AVE.
NEW WINDSOR, NY 12553

ELECTRICAL POWER, SYSTEMS, & LIGHTING PLAN - SCREENING & INFLUENT AREA

REVISIONS

NO.	DESCRIPTION	DATE

ISSUED DATE:	18 APRIL, 2025
DESIGN BY:	RRM
DRAWN BY:	CDJ
CHECKED BY:	RJK
REVIEWED BY:	RJK

SHEET NO.
E-503

PROJECT # 18-732 PHASE #

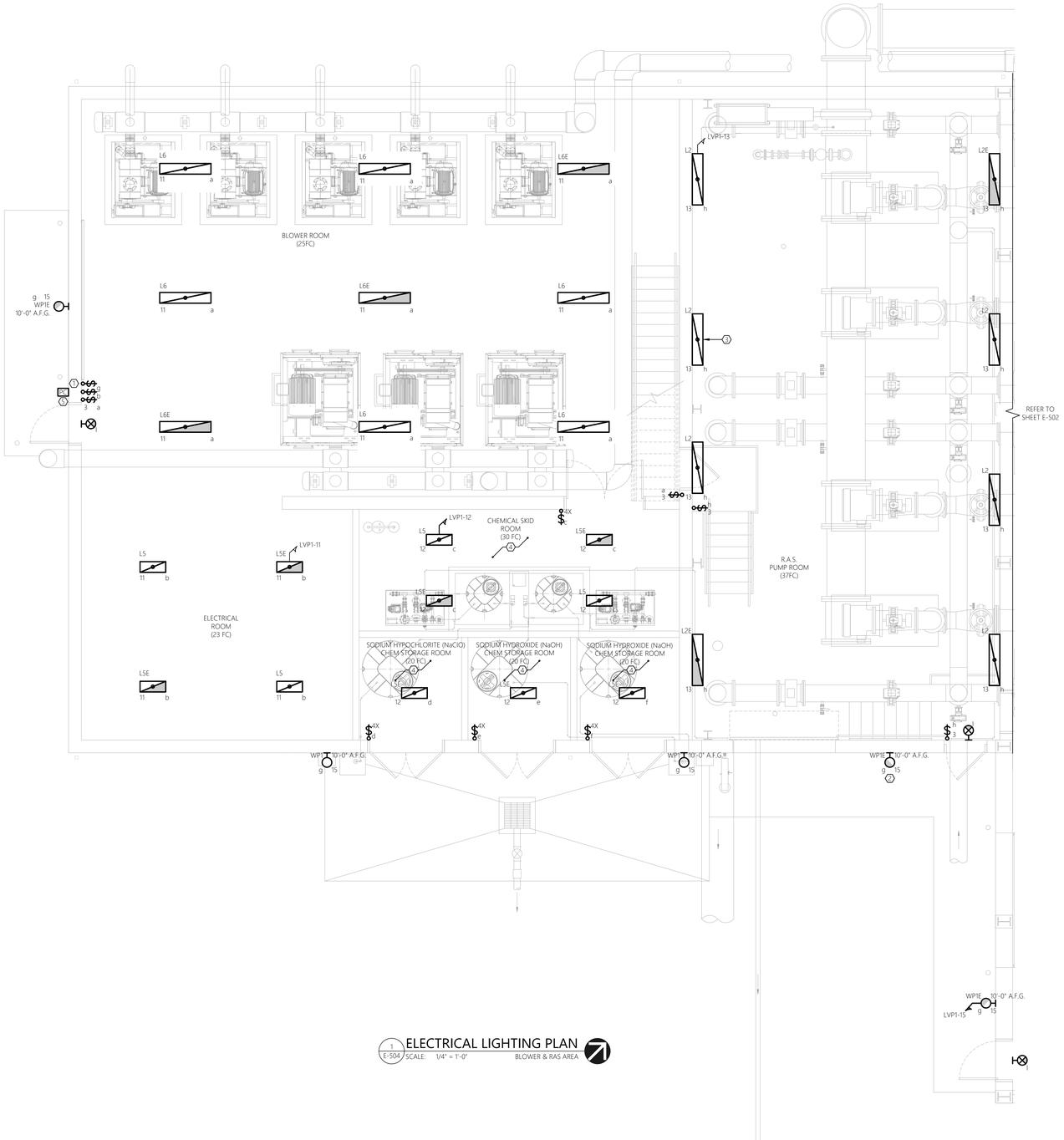

1 E-504 ELECTRICAL LIGHTING PLAN
SCALE: 1/4" = 1'-0" BLOWER & RAS AREA

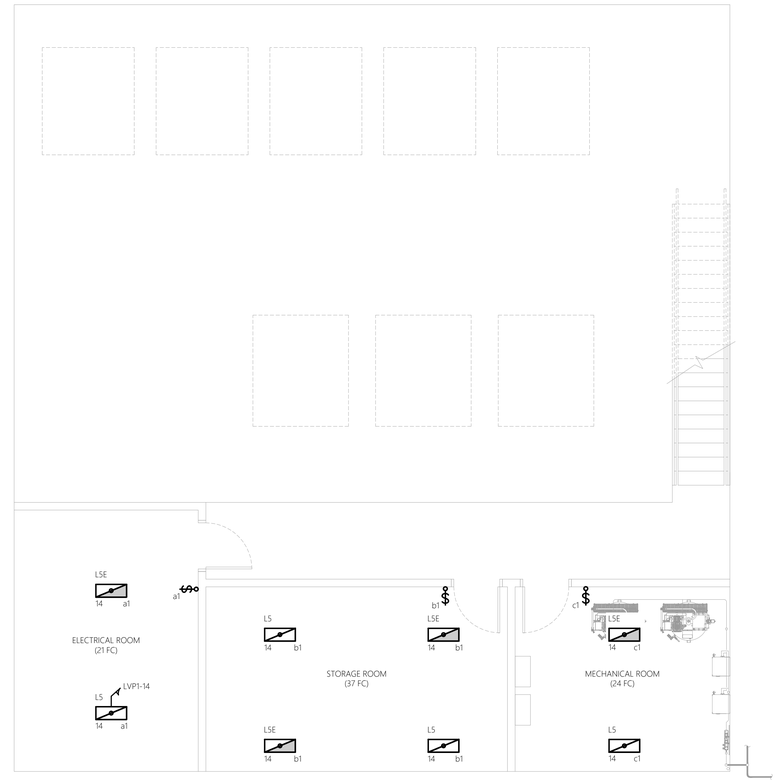

2 E-504 ELECTRICAL LIGHTING PLAN
SCALE: 1/4" = 1'-0" 2ND FLOOR

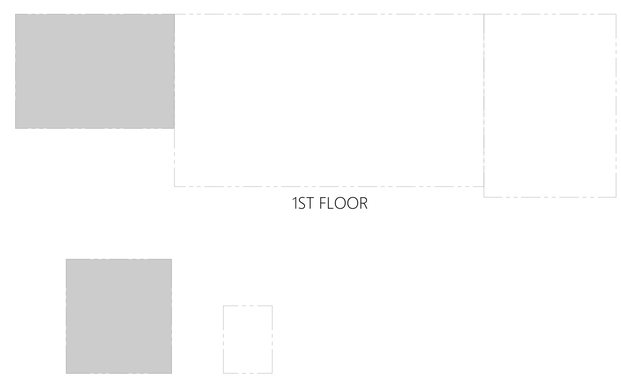

3 E-504 OVERALL PLAN KEY
SCALE: NTS MBR BUILDING

GENERAL NEW WORK NOTES:

1. REFER TO E-001 FOR ELECTRICAL LEGENDS, ABBREVIATIONS AND GENERAL PROJECT NOTES.
2. PROVIDE A DEDICATED GROUNDING CONDUCTOR FOR ALL ELECTRICAL EQUIPMENT AND ASSOCIATED EQUIPMENT AND DEVICES.
3. EQUIPMENT & DEVICE LOCATIONS ARE SHOWN AS GENERAL IN NATURE. REFER TO MECHANICAL, PROCESS AND HVAC DRAWINGS FOR EXACT LOCATIONS.
4. ALL PROPOSED EQUIPMENT LOCATIONS/INSTALLATIONS TO COMPLY WITH NEC ARTICLE 110.26 'SPACES ABOUT ELECTRICAL EQUIPMENT'. CONTRACTOR TO COORDINATE INSTALLATION LOCATIONS OF ALL EQUIPMENT WITH ALL OTHER TRADE CONTRACTORS PRIOR TO ROUGH IN.
5. CONTRACTOR RESPONSIBLE FOR MOUNTING OF ALL CONTROL PANELS, CONTROLLERS, TRANSMITTERS, ETC... THAT ARE FURNISHED AS PART OF THIS PROJECT (INCLUDING GENERAL CONTRACTOR). PROVIDE ALL NECESSARY MOUNTING HARDWARE/EQUIPMENT. ALL MOUNTING HARDWARE/EQUIPMENT TO BE STAINLESS STEEL. REFERENCE TYPICAL MOUNTING DETAILS FOR ADDITIONAL INFORMATION.
6. REFER TO ELECTRICAL SINGLE LINE DIAGRAM, SCHEDULES, AND DETAILS FOR ADDITIONAL INFORMATION/REQUIREMENTS.
7. CONTRACTOR TO COORDINATE ALL ASPECTS OF SEQUENCE OF CONSTRUCTION WITH OWNER AND GENERAL CONTRACTOR.
8. ALL EXTERIOR RECEPTACLES TO BE INSTALLED AT A HEIGHT OF 36" A.F.G. ALL INTERIOR RECEPTACLES TO BE INSTALLED AT A HEIGHT OF 24" A.F.F. UNLESS NOTED OTHERWISE.
9. CONTRACTOR TO PROVIDE LABEL FOR ALL PROPOSED ELECTRICAL EQUIPMENT AND DEVICES. COORDINATE FINAL LABELING REQUIREMENTS WITH THE OWNER AND ALL OTHER TRADE CONTRACTORS.
10. COORDINATE CONDUIT PENETRATION LOCATIONS THRU EXTERIOR BUILDING WALLS CLOSELY WITH GENERAL CONTRACTOR PRIOR TO PERFORMING WORK.
11. REFER TO DATA DETAILS FOR COMMUNICATION SCOPE OF WORK.
12. CONTRACTOR TO ADJUST FINAL PROPOSED INTERIOR LIGHT FIXTURE LOCATIONS TO AVOID CONFLICTS WITH PROPOSED EQUIPMENT, AND PIPING SYSTEMS.
13. CONTRACTOR TO ADJUST FINAL AIMING ANGLE OF EXTERIOR LIGHT FIXTURES TO LIGHT DESIRED AREAS AND MINIMIZE LIGHT POLLUTION. COORDINATE WITH ALL OTHER TRADE CONTRACTORS. REFER TO THE LUMINAIRE SCHEDULE FOR ADDITIONAL INFORMATION/REQUIREMENTS.

0' 2' 4' 8'
SCALE: 1/4" = 1'-0"

SHEET KEY NOTES:

1. CONTRACTOR TO PROVIDE AS WATTSTOPPER RT-200 ASTRONOMICAL TIME SWITCH, OR APPROVED EQUAL WITHIN NEMA 1 ENCLOSURE. SWITCH TO CONTROL THE PROPOSED EXTERIOR WALL MOUNTED LIGHT FIXTURES TYPES 'WP1' & 'WP1E' AND THE SECOND TO CONTROL THE PROPOSED SITE LIGHT POLE FIXTURES TYPE 'S1'. PROGRAM TIME SWITCH FOR LIGHTING 'ON' AT ASTRONOMICAL SUNSET AND 'OFF' AT ASTRONOMICAL SUNRISE. FINAL ON/OFF PROGRAMMING PARAMETERS TO BE COORDINATED WITH THE OWNER.
2. COORDINATE FINAL INSTALLATION LOCATION WITH OWNER AND ALL OTHER TRADE CONTRACTORS PRIOR TO ROUGH-IN. TYPICAL OF EIGHT (8) WALL PACK LIGHTING FIXTURES.
3. LIGHT FIXTURES 'L11' AND 'L11E' ARE TO BE WALL MOUNTED 24'-0" ABOVE FINISHED FLOOR. ADJUST FIXTURE MOUNTING BRACKET TO 30 DEGREE ANGLE.
4. CHEMICAL ROOM INTERIOR IS A CORROSIVE ENVIRONMENT. ALL ELECTRICAL EQUIPMENT, WIRING METHODS, AND DEVICES INTERIOR TO THE CHEMICAL ROOM TO BE OF CORROSION RESISTANT MATERIALS/METHODS. UTILIZE NEMA 4X (NON-METALLIC) ENCLOSURES FOR DISCONNECTS AND LOCAL CONTROL STATIONS. UTILIZED TITANIUM FOR ALL SUPPORTS, ANCHORS, AND FASTENERS.
5. CONTRACTOR TO PROVIDE ONE (1) 120V, 20A PHOTO CONTROL WITH ADJUSTABLE SHIELD FOR CONTROL OF EXTERIOR LIGHTING CIRCUITS. INTERLOCK WITH ASTRONOMICAL TIME SWITCHES. CONFIRM FINAL LOCATIONS WITH THE OWNER PRIOR TO ROUGH-IN. INSTALL PER MANUFACTURER'S RECOMMENDATIONS.

MHE ENGINEERING
33 Airport Center Drive, Suite 202
New Windsor, NY 12553
(845) 587-3100
111 Wheatfield Drive, Suite 1
Milford, PA 18337
(570) 296-2765

BID ADDENDUM

JADE STONE ENGINEERING

STATE OF NEW YORK
JEFFREY E. ROBINSON
095896
LICENSED PROFESSIONAL ENGINEER

HAZARDOUS MATERIAL NOTE:

THE SERVICES PROVIDED BY MHE, INCLUDING ALL WORK DEPICTED ON MHE PLANS, DO NOT INCLUDE SERVICES RELATED TO THE IDENTIFICATION, CONTROLS OR HANDLING OF HAZARDOUS MATERIALS, INCLUDING SUCH MATERIALS AS ASBESTOS AND LEAD PAINT. ALL TESTING, IDENTIFICATION, ABATEMENT, CONTROLS, AND HANDLING OF HAZARDOUS MATERIALS SHALL BE UNDERTAKEN BY A HAZARDOUS MATERIAL CONSULTANT AND CERTIFIED PROFESSIONALS. IF SUCH MATERIALS HAVE BEEN IDENTIFIED, CONTRACTOR WILL COMMUNICATE DIRECTLY WITH HAZARDOUS MATERIAL PROFESSIONAL FOR THE PERFORMANCE OF ANY WORK ON OR ADJACENT TO SAID MATERIALS. IF UNIDENTIFIED MATERIALS OF CONCERN ARE ENCOUNTERED WHILE UNDERTAKING THE WORK SHOWN HEREON, CONTRACTOR SHALL IMMEDIATELY NOTIFY ENGINEER AND OWNER, AND SHALL OBTAIN DIRECTION FROM THE HAZARDOUS MATERIAL CONSULTANT PRIOR TO THE CONTINUATION OF WORK INVOLVING SUSPECTED MATERIAL.

UDIG·NY SAFE DIGGING STARTS HERE
CALL 811

UNAUTHORIZED ADDITION OR ALTERATION OF THIS PLAN IS A VIOLATION OF SECTION 7209(2) OF THE NEW YORK STATE EDUCATION LAW.

ALL PRODUCTION & INTELLECTUAL PROPERTY RIGHT RESERVED ©

CAESARS LANE WWTP EXPANSION PROJECT: PHASE 2
145 CAESARS LN.
NEW WINDSOR, NY 12553
FOR TOWN OF NEW WINDSOR
555 UNION AVE.
NEW WINDSOR, NY 12553

ELECTRICAL LIGHTING PLAN - BLOWER & RAS AREA

REVISIONS

NO.	DESCRIPTION	DATE

ISSUED DATE:	06 JUNE, 2025
DESIGN BY:	RRM
DRAWN BY:	CDJ
CHECKED BY:	MGR
REVIEWED BY:	JER

SHEET NO.
E-504

PROJECT # 18-732 PHASE #

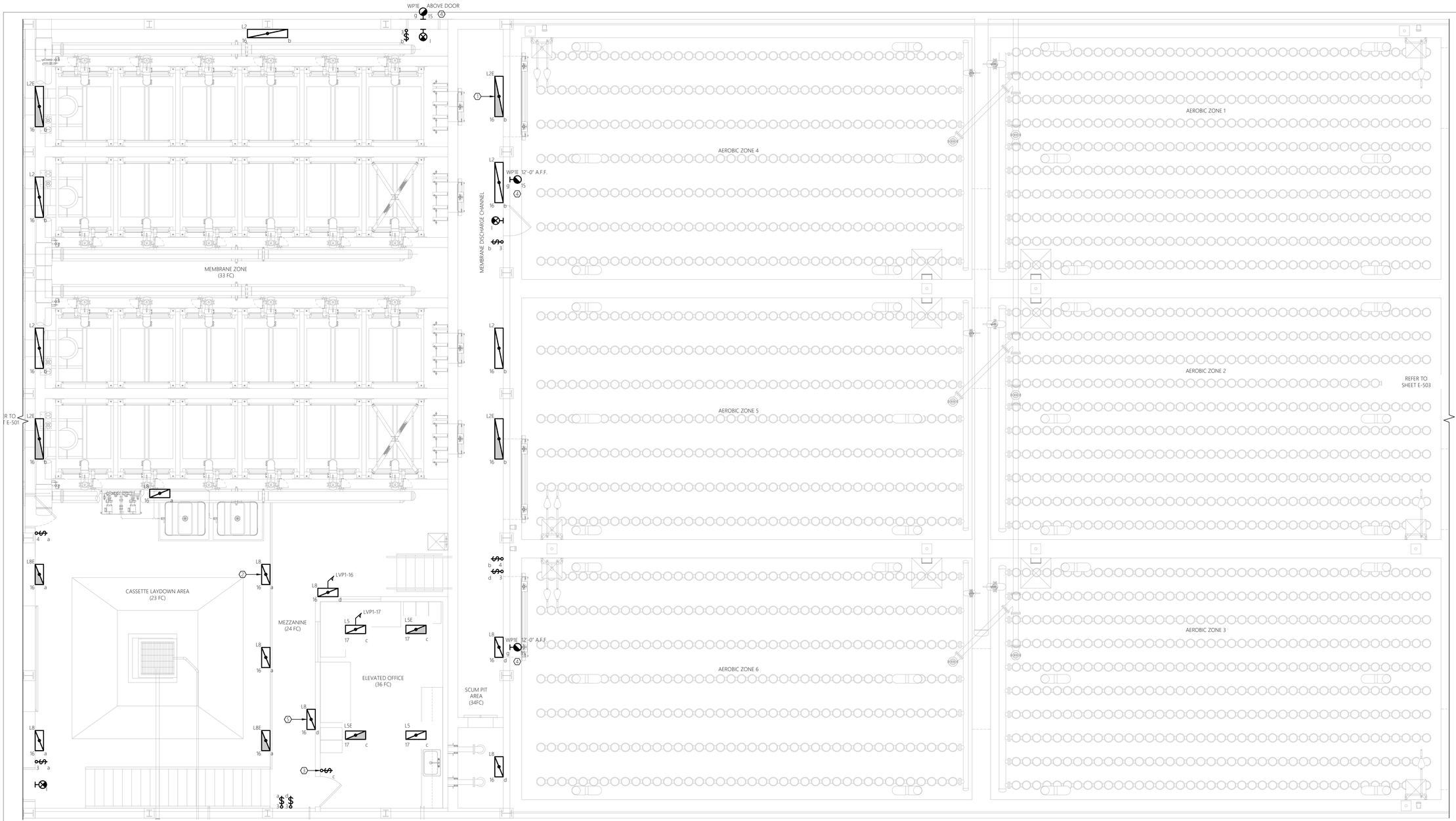

GENERAL NEW WORK NOTES:

1. REFER TO E-001 FOR ELECTRICAL LEGENDS, ABBREVIATIONS AND GENERAL PROJECT NOTES.
2. PROVIDE A DEDICATED GROUNDING CONDUCTOR FOR ALL ELECTRICAL EQUIPMENT AND ASSOCIATED EQUIPMENT AND DEVICES.
3. EQUIPMENT & DEVICE LOCATIONS ARE SHOWN AS GENERAL IN NATURE. REFER TO MECHANICAL, PROCESS AND HVAC DRAWINGS FOR EXACT LOCATIONS.
4. ALL PROPOSED EQUIPMENT LOCATIONS/INSTALLATIONS TO COMPLY WITH NEC ARTICLE 110.26 'SPACES ABOUT ELECTRICAL EQUIPMENT'. CONTRACTOR TO COORDINATE INSTALLATION LOCATIONS OF ALL EQUIPMENT WITH ALL OTHER TRADE CONTRACTORS PRIOR TO ROUGH IN.
5. CONTRACTOR RESPONSIBLE FOR MOUNTING OF ALL CONTROL PANELS, CONTROLLERS, TRANSMITTERS, ETC., THAT ARE FURNISHED AS PART OF THIS PROJECT (INCLUDING GENERAL CONTRACTOR). PROVIDE ALL NECESSARY MOUNTING HARDWARE/EQUIPMENT. ALL MOUNTING HARDWARE/EQUIPMENT TO BE STAINLESS STEEL. REFERENCE TYPICAL MOUNTING DETAILS FOR ADDITIONAL INFORMATION.
6. REFER TO ELECTRICAL SINGLE LINE DIAGRAM, SCHEDULES, AND DETAILS FOR ADDITIONAL INFORMATION/REQUIREMENTS.
7. CONTRACTOR TO COORDINATE ALL ASPECTS OF SEQUENCE OF CONSTRUCTION WITH OWNER AND ALL OTHER TRADE CONTRACTORS.
8. ALL EXTERIOR RECEPTACLES TO BE INSTALLED AT A HEIGHT OF 36" A.F.G. ALL INTERIOR RECEPTACLES TO BE INSTALLED AT A HEIGHT OF 24" A.F.F. UNLESS NOTED OTHERWISE.
9. CONTRACTOR TO PROVIDE LABEL FOR ALL PROPOSED ELECTRICAL EQUIPMENT AND DEVICES. COORDINATE FINAL LABELING REQUIREMENTS WITH THE OWNER AND ALL OTHER TRADE CONTRACTORS.
10. COORDINATE CONDUIT PENETRATION LOCATIONS THRU EXTERIOR BUILDING WALLS CLOSELY WITH GENERAL CONTRACTOR PRIOR TO PERFORMING WORK.
11. REFER TO DATA DETAILS FOR COMMUNICATION SCOPE OF WORK.
12. CONTRACTOR TO ADJUST FINAL PROPOSED INTERIOR LIGHT FIXTURE LOCATIONS TO AVOID CONFLICTS WITH PROPOSED EQUIPMENT, AND PIPING SYSTEMS.
13. CONTRACTOR TO ADJUST FINAL AIMING ANGLE OF EXTERIOR LIGHT FIXTURES TO LIGHT DESIRED AREAS AND MINIMIZE LIGHT POLLUTION. COORDINATE WITH OWNER AND ALL OTHER TRADE CONTRACTORS. REFER TO THE LUMINAIRE SCHEDULE FOR ADDITIONAL INFORMATION/REQUIREMENTS.

SHEET KEY NOTES:

1. LIGHT FIXTURES 'L2' AND 'L2E' ARE TO BE WALL MOUNTED 14'-0" ABOVE FINISHED FLOOR. ADJUST FIXTURE MOUNTING BRACKET TO 30 DEGREE ANGLE.
2. LIGHT FIXTURE 'L8' AND 'L8E' IN THE CASSETTE LAY DOWN AREA ARE TO BE MOUNTED 12'-0" ABOVE FINISHED FLOOR ON WALLS AND MOUNTED TO MEZZANINE GIRDER. ADJUST FIXTURE MOUNTING BRACKET TO 30 DEGREE ANGLE.
3. DIMMING SWITCH FOR DIMMING CONTROL OF ROOM LIGHTING FIXTURES. PROVIDE ALL NECESSARY LOW VOLTAGE CONDUCTORS FOR FULL DIMMING CAPABILITY.
4. CONTROLLED BY SWITCH LOCATED ON SHEET E-504.
5. LIGHT FIXTURES 'L8' AND 'L8E' IN THE MEZZANINE AND SCUM PIT AREA ARE TO BE WALL MOUNTED 8'-0" ABOVE FINISHED FLOOR. ADJUST FIXTURE MOUNTING BRACKET TO 30 DEGREE ANGLE.

0' 2' 4' 8'
SCALE: 1/4" = 1'-0"

1 E-505 ELECTRICAL LIGHTING PLAN
SCALE: 1/4" = 1'-0" MEMBRANE & AEROBIC ZONES

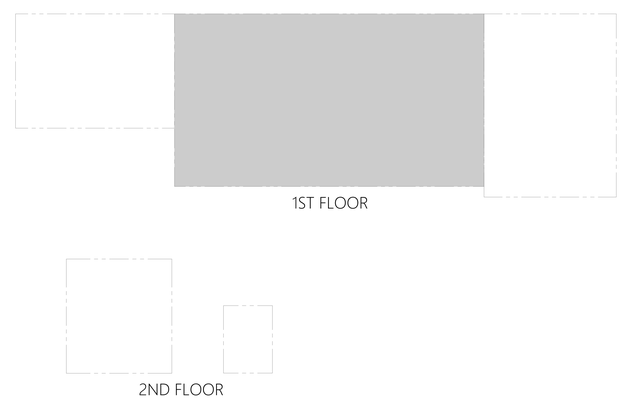

2 E-505 OVERALL PLAN KEY
SCALE: NTS MBR BUILDING

MHE ENGINEERING
33 Airport Center Drive, Suite 202
New Windsor, NY 12553
(845) 587-3100
111 Wheatfield Drive, Suite 1
Milford, PA 18337
(570) 296-2765

BID ADDENDUM

JADE STONE ENGINEERING

STATE OF NEW YORK
JEFFREY E ROBINSON
095896
LICENSED PROFESSIONAL ENGINEER

HAZARDOUS MATERIAL NOTE:
THE SERVICES PROVIDED BY MHE, INCLUDING ALL WORK DEPICTED ON MHE PLANS, DO NOT INCLUDE SERVICES RELATED TO THE IDENTIFICATION, CONTROLS OR HANDLING OF HAZARDOUS MATERIALS, INCLUDING SUCH MATERIALS AS ASBESTOS AND LEAD PAINT. ALL TESTING, IDENTIFICATION, ABATEMENT, CONTROLS, AND HANDLING OF HAZARDOUS MATERIALS SHALL BE UNDERTAKEN BY A HAZARDOUS MATERIAL CONSULTANT AND CERTIFIED PROFESSIONALS. IF SUCH MATERIALS HAVE BEEN IDENTIFIED, CONTRACTOR WILL COMMUNICATE DIRECTLY WITH HAZARDOUS MATERIAL PROFESSIONAL FOR THE PERFORMANCE OF ANY WORK ON OR ADJACENT TO SAID MATERIALS. IF UNIDENTIFIED MATERIALS OF CONCERN ARE ENCOUNTERED WHILE UNDERTAKING THE WORK SHOWN HEREON, CONTRACTOR SHALL IMMEDIATELY NOTIFY ENGINEER AND OWNER, AND SHALL OBTAIN DIRECTION FROM THE HAZARDOUS MATERIAL CONSULTANT PRIOR TO THE CONTINUATION OF WORK INVOLVING SUSPECTED MATERIAL.

UDIG·NY SAFE DIGGING STARTS HERE
CALL 811

UNAUTHORIZED ADDITION OR ALTERATION OF THIS PLAN IS A VIOLATION OF SECTION 7209(2) OF THE NEW YORK STATE EDUCATION LAW.

ALL PRODUCTION & INTELLECTUAL PROPERTY RIGHT RESERVED ©

CAESARS LANE WWTP EXPANSION PROJECT: PHASE 2
145 CAESARS LN.
NEW WINDSOR, NY 12553
FOR TOWN OF NEW WINDSOR
555 UNION AVE.
NEW WINDSOR, NY 12553

ELECTRICAL LIGHTING PLAN - MEMBRANE & AEROBIC ZONES

REVISIONS

NO.	DESCRIPTION	DATE

ISSUED DATE:	06 JUNE, 2025
DESIGN BY:	RRM
DRAWN BY:	CDJ
CHECKED BY:	MGR
REVIEWED BY:	JER
SHEET NO.	E-505
PROJECT # 18-732	PHASE #

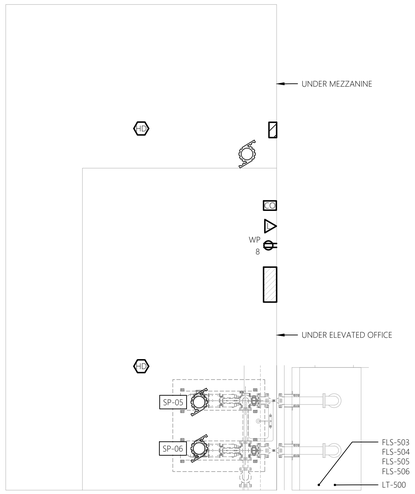

1 E-506 ELECTRICAL FLOOR PLAN - POWER & SYSTEMS
SCALE: 1/4" = 1'-0" SCUM PUMP AREA AND SCUM PIT

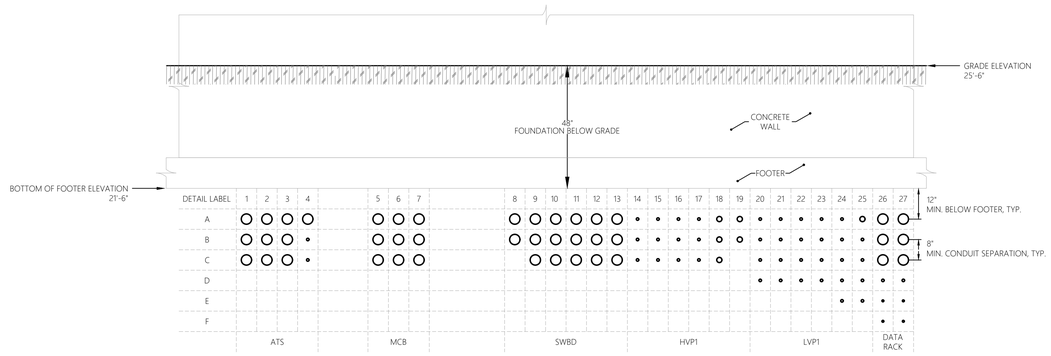

1ST FLOOR ELECTRICAL ROOM
UNDERGROUND CONDUIT ROUTING SCHEDULE

DETAIL LABLE	1	2	3	4	5	6	7	8	9	10	11	12	13	14	15	16	17	18	19	20	21	22	23	24	25	26	27
	DUCT BANK (REFER TO DUCT BANK SCHEDULE)																										
A	DB-03	DB-03	DB-04	DB-04	DB-02	DB-02	DB-02	DB-21	DB-21	DB-17	DB-16	DB-06	DB-06	DB-10	DB-11	DB-12	DB-13	DB-10	DB-11	DB-10	DB-11	DB-12	DB-13	DB-14	DB-14	DB-06	DB-02
B	DB-03	DB-03	DB-04	DB-3	DB-02	DB-02	DB-02	DB-21	DB-21	DB-17	DB-16	DB-07	DB-07	DB-10	DB-11	DB-12	DB-13	DB-12	DB-13	DB-10	DB-11	DB-12	DB-13	DB-14	DB-14	DB-07	DB-21
C	DB-03	DB-04	DB-04	DB-04	DB-02	DB-02	DB-02	-	DB-21	DB-17	DB-16	DB-15	DB-15	DB-19	DB-19	DB-19	DB-14	DB-14	-	DB-14	DB-14	DB-14	DB-14	DB-14	DB-14	DB-16	DB-15
D	-	-	-	-	-	-	-	-	-	-	-	-	-	-	-	-	-	-	-	DB-14	DB-14	DB-14	DB-14	DB-14	DB-14	DB-04	DB-03
E	-	-	-	-	-	-	-	-	-	-	-	-	-	-	-	-	-	-	-	-	-	-	-	DB-03	DB-04	DB-04	DB-03
F	-	-	-	-	-	-	-	-	-	-	-	-	-	-	-	-	-	-	-	-	-	-	-	-	-	DB-04	DB-03
	ATS				MCB			SWBD						HVP1						LVP1						DATA RACK	

A E-506 ELECTRICAL WALL SECTION DETAIL
SCALE: 1/2" = 1'-0" 1ST FLOOR ELECTRICAL ROOM

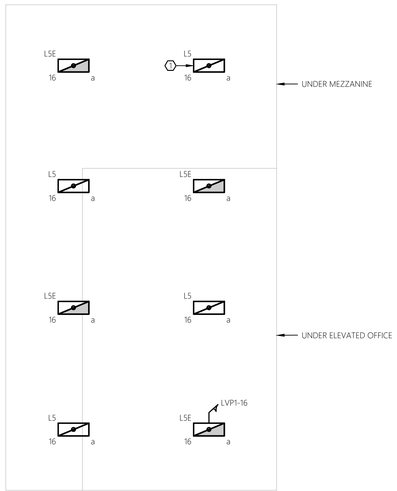

2 E-506 ELECTRICAL FLOOR PLAN - LIGHTING
SCALE: 1/4" = 1'-0" SCUM PUMP AREA AND SCUM PIT

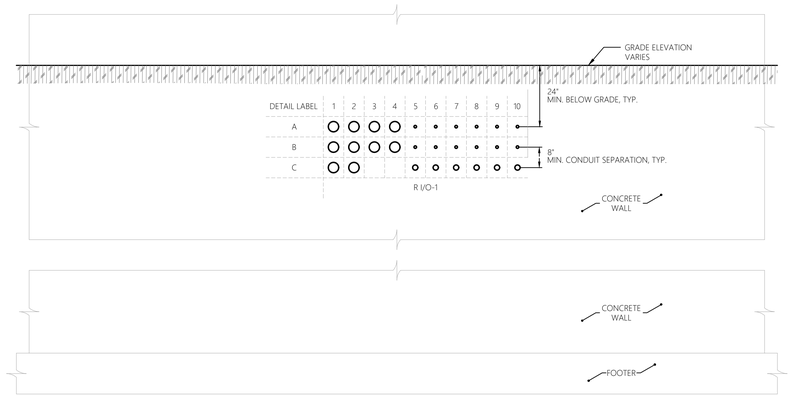

MEMBRANE ZONE
UNDERGROUND CONDUIT ROUTING SCHEDULE

DETAIL LABLE	1	2	3	4	5	6	7	8	9	10
	DUCT BANK (REFER TO DUCT BANK SCHEDULE)									
A	DB-06	DB-06	DB-16	DB-16	DB-14	DB-14	DB-13	DB-12	DB-11	DB-10
B	DB-07	DB-07	DB-17	DB-17	DB-14	DB-14	DB-13	DB-12	DB-11	DB-10
C	DB-21	DB-21	DB-14	DB-14	DB-14	DB-14	DB-13	DB-12	DB-11	DB-10
	R I/O-1									

B E-506 ELECTRICAL WALL SECTION DETAIL
SCALE: 1/2" = 1'-0" MEMBRANE ZONE

0' 2' 4' 8'
SCALE: 1/4" = 1'-0"

0' 1' 2' 4'
SCALE: 1/2" = 1'-0"

1ST FLOOR

2ND FLOOR

3 E-501 OVERALL PLAN KEY
SCALE: NTS MBR BUILDING

GENERAL SHEET NOTES:

1. REFER TO E-001 FOR ELECTRICAL LEGENDS, ABBREVIATIONS AND GENERAL PROJECT NOTES.
2. PROVIDE A DEDICATED GROUNDING CONDUCTOR FOR ALL ELECTRICAL EQUIPMENT AND ASSOCIATED EQUIPMENT AND DEVICES.
3. EQUIPMENT & DEVICE LOCATIONS ARE SHOWN AS GENERAL IN NATURE. REFER TO MECHANICAL, PROCESS AND HVAC DRAWINGS FOR EXACT LOCATIONS.
4. ALL PROPOSED EQUIPMENT LOCATIONS/INSTALLATIONS TO COMPLY WITH NEC ARTICLE 110.26 "SPACES ABOUT ELECTRICAL EQUIPMENT". CONTRACTOR TO COORDINATE INSTALLATION LOCATIONS OF ALL EQUIPMENT WITH ALL OTHER TRADE CONTRACTORS PRIOR TO ROUGH IN.
5. CONTRACTOR RESPONSIBLE FOR MOUNTING OF ALL CONTROL PANELS, CONTROLLERS, TRANSMITTERS, ETC... THAT ARE FURNISHED AS PART OF THIS PROJECT (INCLUDING GENERAL CONTRACTOR). PROVIDE ALL NECESSARY MOUNTING HARDWARE/EQUIPMENT. ALL MOUNTING HARDWARE/EQUIPMENT TO BE STAINLESS STEEL. REFERENCE TYPICAL MOUNTING DETAILS FOR ADDITIONAL INFORMATION.
6. REFER TO ELECTRICAL SINGLE LINE DIAGRAM, SCHEDULES, AND DETAILS FOR ADDITIONAL INFORMATION/REQUIREMENTS.
7. CONTRACTOR TO COORDINATE ALL ASPECTS OF SEQUENCE OF CONSTRUCTION WITH OWNER AND GENERAL CONTRACTOR.
8. ALL EXTERIOR RECEPTACLES TO BE INSTALLED AT A HEIGHT OF 36" A.F.G. ALL INTERIOR RECEPTACLES TO BE INSTALLED AT A HEIGHT OF 24" A.F.F. UNLESS NOTED OTHERWISE.
9. CONTRACTOR TO PROVIDE LABEL FOR ALL PROPOSED ELECTRICAL EQUIPMENT AND DEVICES. COORDINATE FINAL LABELING REQUIREMENTS WITH THE OWNER AND ALL OTHER TRADE CONTRACTORS.
10. COORDINATE CONDUIT PENETRATION LOCATIONS THRU EXTERIOR BUILDING WALLS CLOSELY WITH GENERAL CONTRACTOR PRIOR TO PERFORMING WORK.

SHEET KEY NOTE:

1. CONTROLLED BY SWITCH ON SHEET E-505.

MHE ENGINEERING
33 Airport Center Drive, Suite 202
New Windsor, NY 12553
(845) 567-3100
111 Wheatfield Drive, Suite 1
Milford, PA 18337
(570) 296-2765

BID ADDENDUM

JADE STONE ENGINEERING

STATE OF NEW YORK · JEFFREY E. ROBINSON · 095896 · LICENSED PROFESSIONAL ENGINEER

HAZARDOUS MATERIAL NOTE:
THE SERVICES PROVIDED BY MHE, INCLUDING ALL WORK DEPICTED ON MHE PLANS, DO NOT INCLUDE SERVICES RELATED TO THE IDENTIFICATION, CONTROLS OR HANDLING OF HAZARDOUS MATERIALS, INCLUDING SUCH MATERIALS AS ASBESTOS AND LEAD PAINT. ALL TESTING, IDENTIFICATION, ABATEMENT, CONTROLS, AND HANDLING OF HAZARDOUS MATERIALS SHALL BE UNDERTAKEN BY A HAZARDOUS MATERIAL CONSULTANT AND CERTIFIED PROFESSIONALS. IF SUCH MATERIALS HAVE BEEN IDENTIFIED, CONTRACTOR WILL COMMUNICATE DIRECTLY WITH HAZARDOUS MATERIAL PROFESSIONAL FOR THE PERFORMANCE OF ANY WORK ON OR ADJACENT TO SAID MATERIALS. IF UNIDENTIFIED MATERIALS OF CONCERN ARE ENCOUNTERED WHILE UNDERTAKING THE WORK SHOWN HEREON, CONTRACTOR SHALL IMMEDIATELY NOTIFY ENGINEER AND OWNER, AND SHALL OBTAIN DIRECTION FROM THE HAZARDOUS MATERIAL CONSULTANT PRIOR TO THE CONTINUATION OF WORK INVOLVING SUSPECTED MATERIAL.

UDIG·NY SAFE DIGGING STARTS HERE
CALL 811

UNAUTHORIZED ADDITION OR ALTERATION OF THIS PLAN IS A VIOLATION OF SECTION 7209(2) OF THE NEW YORK STATE EDUCATION LAW.

ALL PRODUCTION & INTELLECTUAL PROPERTY RIGHT RESERVED ©

CAESARS LANE WWTP EXPANSION PROJECT: PHASE 2
145 CAESARS LN.
NEW WINDSOR, NY 12553
FOR TOWN OF NEW WINDSOR
555 UNION AVE.
NEW WINDSOR, NY 12553

ELECTRICAL FLOOR PLANS - SCUM PUMP AREA, 1ST FLOOR ELECTRICAL ROOM, & MEMBRANE ZONE

REVISIONS

NO.	DESCRIPTION	DATE

ISSUED DATE:	06 JUNE, 2025
DESIGN BY:	RRM
DRAWN BY:	CDJ
CHECKED BY:	MGR
REVIEWED BY:	JER

SHEET NO.
E-506

PROJECT # 18-732 PHASE #

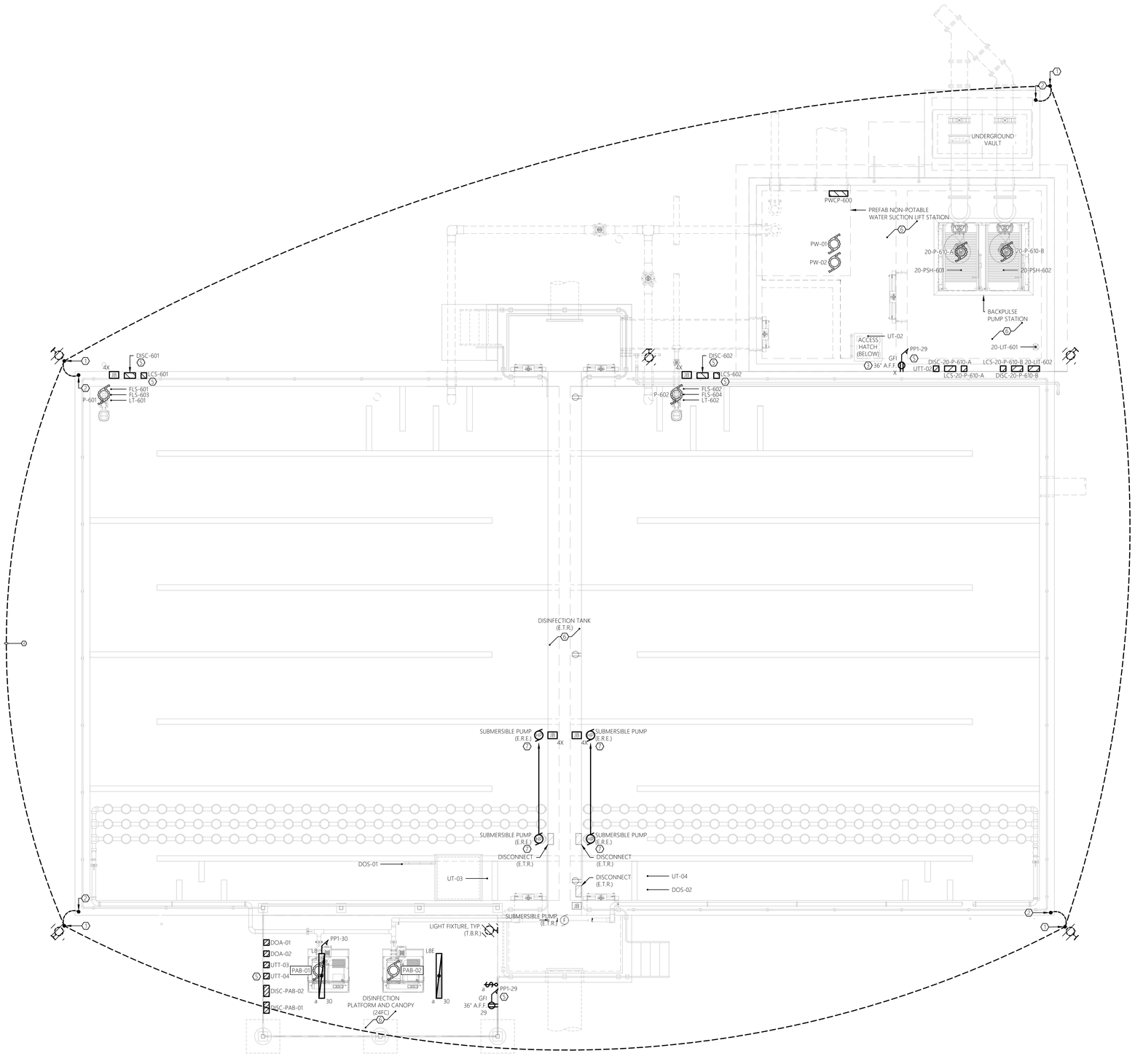

SCALE: 1/4" = 1'-0"

1 E-600 ELECTRICAL POWER, SYSTEMS, & LIGHTING PLAN
SCALE: 1/4" = 1'-0"
DISINFECTION TANK

GENERAL NEW WORK NOTES:

1. REFER TO E-001 FOR ELECTRICAL LEGENDS, ABBREVIATIONS AND GENERAL PROJECT NOTES.
2. PROVIDE A DEDICATED GROUNDING CONDUCTOR FOR ALL ELECTRICAL EQUIPMENT AND ASSOCIATED EQUIPMENT/DEVICES.
3. EQUIPMENT & DEVICE LOCATIONS ARE SHOWN AS GENERAL IN NATURE. REFER TO ALL TRADE CONTRACT DRAWINGS AND COORDINATE WITH ALL TRADE CONTRACTORS, OWNER, AND ENGINEER FOR EXACT LOCATIONS. CLOSE CONTRACTOR COORDINATION REQUIRED.
4. ALL PROPOSED EQUIPMENT LOCATIONS/INSTALLATIONS TO COMPLY WITH NEC ARTICLE 110.26 'SPACES ABOUT ELECTRICAL EQUIPMENT'. CONTRACTOR TO COORDINATE INSTALLATION LOCATIONS OF ALL EQUIPMENT WITH APPLICABLE TRADE CONTRACTOR, OWNER, AND ENGINEER PRIOR TO ROUGH IN.
5. CONTRATOR TO PROVIDE ALL REQUIRED MOUNTING HARDWARE, EQUIPMENT, BRACKETS, SUPPORTS, ACCESSORIES, ETC... PROVIDE AS STAINLESS STEEL IN CORROSIVE ENVIRONMENTS, EXTERIOR APPLICATIONS, OR WHERE INDICATED ON THE CONTRACT DRAWINGS.
6. REFER TO ELECTRICAL SINGLE LINE DIAGRAMS, SPECIFICATIONS, SCHEDULES, AND DETAILS FOR ADDITIONAL INFORMATION/REQUIREMENTS.
7. CONTRACTOR TO COORDINATE ALL ASPECTS OF SEQUENCE OF CONSTRUCTION WITH OWNER, ENGINEER, AND ALL TRADE CONTRACTORS.
8. ALL WEATHERPROOF RECEPTACLES TO BE INSTALLED AT A HEIGHT OF 36" A.F.G.
9. CONTRACTOR TO PROVIDE LABEL FOR ALL PROPOSED ELECTRICAL EQUIPMENT AND DEVICES. COORDINATE FINAL LABELING REQUIREMENTS WITH THE OWNER. REFER TO SPECIFICATION SECTION 26 0553 - IDENTIFICATION FOR ELECTRICAL SYSTEMS FOR ADDITIONAL INFORMATION/REQUIREMENTS.
10. CONTRACTOR TO COORDINATE ALL CONDUIT PENETRATIONS AND ROUTING WITH ALL TRADE CONTRACTORS, OWNER, AND ENGINEER PRIOR TO ROUGH-IN TO AVOID CONFLICTS.
11. NOT ALL EQUIPMENT/DEVICES MAY BE SHOWN FOR CLARITY. CONTRACTOR SHALL FIELD VERIFY ALL EXISTING AND PROPOSED CONDITIONS PRIOR TO COMMENCEMENT OF CONSTRUCTION. COORDINATE WITH ALL TRADE CONTRACTORS, OWNER, AND ENGINEER.
12. CONTRACTOR TO ADJUST FINAL INTERIOR LIGHT FIXTURE LOCATIONS TO AVOID CONFLICTS WITH EQUIPMENT, PIPING SYSTEMS, AND DUCT WORK. COORDINATE WITH ALL TRADE CONTRACTORS, OWNER, AND ENGINEER PRIOR TO ROUGH-IN.

GENERAL DEMOLITION NOTES:

MECHANICAL EQUIPMENT & MISC. ELECTRICAL EQUIPMENT:
WHERE INDICATED TO BE DEMOLISHED:
- REFER TO GENERAL CONTRACT DRAWINGS FOR AN ACCURATE DEPICTION OF ALL DEMOLITION REQUIRED AS PART OF THIS CONTRACT.
- REMOVE ALL WIRE (POWER & CONTROLS) & EXPOSED CONDUIT BACK TO SOURCE PANEL, UNLESS OTHERWISE INDICATED, UOI.
- REMOVE ANY ASSOCIATED MOTOR STARTERS, CONTROL STATIONS, &/OR DISCONNECTS, UOI.
- REMOVE CIRCUIT WIRING FROM SOURCE PANEL AND REMOVE ASSOCIATED SOURCE CIRCUIT BREAKER, UOI.
- REMOVE ALL INTERLOCK CIRCUITRY, UOI.
- PROVIDE REVISED TYPED PANELBOARD DIRECTORIES FOR ALL EXISTING TO REMAIN PANELS WHERE CIRCUITS ARE TO BE REMOVED.
- REMOVE ALL ASSOCIATED MOUNTING HARDWARE, BRACKETS, AND EQUIPMENT, UOI.

RECEPTACLES:
WHERE INDICATED TO BE DEMOLISHED:
- REMOVE ALL RECEPTACLES IMPACTED BY WALL MODIFICATIONS AND OVERALL PROJECT IMPROVEMENTS. **NOTE** ALL EXISTING RECEPTACLES MAY NOT BE SHOWN ON THESE DEMOLITION PLANS. MINOR FIELD VERIFICATION REQUIRED.
- REMOVE DEVICE, AND ALL ASSOCIATED WIRE & CONDUIT BACK TO SOURCE OR NEAREST ACTIVE JUNCTION BOX, UOI.

LIGHTING:
WHERE INDICATED TO BE DEMOLISHED:
- REMOVE ALL FIXTURES THROUGHOUT SPACE. **NOTE** ALL EXISTING LIGHTING FIXTURES MAY NOT BE SHOWN ON THESE DEMOLITION PLANS. MINOR FIELD VERIFICATION REQUIRED.
- REMOVE ALL ASSOCIATED WIRING BACK TO SOURCE, UOI.
- REMOVE SWITCHING AND CONTROL DEVICES, UOI.
- REMOVE CONTACTORS ASSOCIATED WITH LOW VOLTAGE SWITCHING DEVICES, UOI.
- DISPOSE OF ALL LAMPS IN ACCORDANCE WITH STATE/FEDERAL AND EPA REQUIREMENTS.

PANELBOARD REMOVAL AND REPLACEMENT:
- REFER TO SINGLE LINE DIAGRAMS FOR SCOPE OF WORK.

CIRCUIT AND FEEDER REMOVAL AND REPLACEMENT:
- MAINTAIN ANY EXISTING NON-IMPACTED PANELBOARDS AND ANY NON-IMPACTED CIRCUITS WHICH ARE EXISTING TO REMAIN.
- WHERE CIRCUITS ARE AFFECTED BY MODIFICATION/REMOVAL ACTIVITIES, PROVIDE NECESSARY CIRCUIT EXTENSIONS AND ALL NECESSARY LABOR/MATERIALS AS NECESSARY TO REPAIR AND RE-CONNECT CIRCUIT(S).
- ANY CIRCUITS/FEEDERS WHICH REQUIRE SHUTDOWN TO ACCOMMODATE WORK SHALL BE COORDINATED WITH THE OWNER WELL IN ADVANCE.

BUILDING/STRUCTURE GROUND SYSTEM:
- CONTRACTOR TO CAREFULLY PROTECT AND MAINTAIN ALL GROUND SYSTEMS ASSOCIATED WITH BUILDINGS/STRUCTURES EXISTING TO REMAIN.
- CONTRACTOR TO REMOVE ALL GROUND SYSTEMS ASSOCIATED WITH BUILDING/STRUCTURES TO BE REMOVED.
- GROUND SYSTEM COMPONENTS MAY INCLUDE, BUT ARE NOT LIMITED TO, GROUNDING CONDUCTORS, JUMPERS, TERMINATIONS, RODS, AND AIR TERMINALS. CONTRACTOR TO FIELD VERIFY EXISTING CONDITIONS PRIOR TO COMMENCEMENT OF DEMOLITION.

HAZARDOUS MATERIAL REMOVAL:
PERFORM WORK FOR REMOVAL AND DISPOSAL OF EQUIPMENT AND MATERIALS CONTAINING TOXIC SUBSTANCES REGULATED UNDER THE FEDERAL TOXIC SUBSTANCES CONTROL ACT (TSCA) IN ACCORDANCE WITH APPLICABLE FEDERAL, STATE, AND LOCAL REGULATIONS. APPLICABLE EQUIPMENT AND MATERIALS INCLUDE, BUT ARE NOT LIMITED TO:
- PCB-CONTAINING ELECTRICAL EQUIPMENT, INCLUDING TRANSFORMERS, CAPACITORS, AND SWITCHES.
- PCB- AND DEHP-CONTAINING LIGHTING BALLASTS.
- MERCURY-CONTAINING LAMPS AND TUBES, INCLUDING FLUORESCENT LAMPS, HIGH INTENSITY DISCHARGE (HID), ARC LAMPS, ULTRA-VIOLET, HIGH PRESSURE SODIUM, MERCURY VAPOR, IGNITRON TUBES, NEON, AND INCANDESCENT.
- CONTRACTOR TO COORDINATE ANY REQUIRED HAZARDOUS MATERIAL REMOVAL WITH THE OWNER AND CONTRACT #1.

GENERAL SHEET NOTES:

1. REFER TO E-001 FOR ELECTRICAL LEGENDS, ABBREVIATIONS, AND GENERAL PROJECT NOTES.
2. ITEMS INDICATED TO BE REMOVED:
   - 2.1. REMOVE ALL CONDUCTORS AND EXPOSED CONDUIT BACK TO SOURCE (UOI).
   - 2.2. REMOVE CIRCUIT WIRING AND CIRCUIT BREAKER FROM SOURCE PANEL (UOI).
   - 2.3. REMOVE ALL ASSOCIATED CONTROL CONDUCTORS, CONDUITS, AND DEVICES (UOI).
   - 2.4. REMOVE ASSOCIATED STARTERS, DISCONNECTS, AND ASSOCIATED CIRCUITRY (UOI).
   - 2.5. REMOVE EQUIPMENT PADS & MOUNTING HARDWARE, BRACKETS, ACCESSORIES, ETC... (UOI).
   - 2.6. REVISE PANELBOARD AND MOTOR CONTROL CENTER DIRECTORIES/NAME PLATES AS CHANGES OCCUR (UOI).
3. THESE DEMOLITION DRAWINGS ARE SCHEMATIC IN NATURE AND ARE BASED ON CURSORY FIELD OBSERVATION AND EXISTING DRAWINGS. IT IS NOT THE INTENTION OF THESE DRAWINGS TO INDICATE EVERY DEVICE/FIXTURE REQUIRING REMOVAL/DEMO RATHER GENERAL SYSTEMS WHICH ARE TO BE REMOVED.
4. CIRCUITS NOT IN AREA OF WORK THAT ARE AFFECTED BY WORK SHALL BE OPERATIONAL DURING PROJECT. PROVIDE TEMPORARY CIRCUITS AS NECESSARY.
5. CIRCUIT, EQUIPMENT, AND DEVICE REMOVAL SHALL NOT AFFECT THE INTEGRITY OR FUNCTIONALITY OF CIRCUITS TO REMAIN. ALL CIRCUITS TO REMAIN SHALL BE MAINTAINED. PROVIDE ALL NECESSARY CIRCUIT MODIFICATIONS AND EXTENSIONS.
6. WHERE REMOVALS LEAVE HOLES AND DAMAGED SURFACES EXPOSED IN THE FINISHED WORK, PATCH AND REPAIR THESE HOLES AND DAMAGED SURFACES TO MATCH ADJACENT FINISHED SURFACES. WHERE NEW WORK IS TO BE APPLIED TO EXISTING SURFACES, PERFORM REMOVALS, AND PATCHING IN A MANNER TO PRODUCE SURFACES SUITABLE FOR RECEIVING NEW WORK. COORDINATE ALL WORK WITH CONTRACT #1 AND OWNER.
7. COORDINATE WITH ALL CONTRACT DRAWINGS AND TRADE CONTRACTORS FOR ADDITIONAL EQUIPMENT THAT IS TO BE DEMOLISHED. FOR ALL EQUIPMENT SHOWN/INDICATED FOR REMOVAL, DISCONNECT AND REMOVE ELECTRICAL CIRCUIT INCLUDING CONDUCTORS AND CONDUIT BACK TO SOURCE.
8. NOT ALL EQUIPMENT/DEVICES ARE SHOWN FOR CLARITY. CONTRACTOR SHALL FIELD VERIFY ALL EXISTING CONDITIONS AND REPORT DISCREPANCIES TO ENGINEER PRIOR TO COMMENCEMENT OF DEMOLITION.
9. REFER TO THE ELECTRICAL SINGLE LINE DIAGRAMS, SCHEDULES & DETAILS FOR ADDITIONAL DEMOLITION INFORMATION/REQUIREMENTS.
10. COORDINATE ALL ASPECTS OF SEQUENCE OF REMOVAL WITH THE OWNER AND CONTRACT #2. REFER TO SPECIFICATIONS AND DEMOLITION SINGLE LINE DIAGRAM FOR ADDITIONAL INFORMATION.
11. WHERE REMOVAL OF CONDUIT SYSTEM IS NOT FEASIBLE, REMOVE ALL CONDUCTORS FROM CONDUIT SYSTEM, CUT FLUSH, CAP CONDUIT SYSTEM, AND ABANDON IN PLACE. FEASIBLE IS DEFINED AS BEING LOCATED WITHIN A CONCRETE DUCT BANK OR CONCRETE SLAB. ALL OTHER INSTANCES TO HAVE THE CONDUIT & CIRCUITRY TO BE REMOVED IN THERE ENTIRETY. FIELD VERIFY AND COORDINATE FINAL REQUIREMENTS WITH THE OWNER, TYPICAL.

SHEET KEY NOTES:

1. CONTRACTOR TO PROVIDE 3/4"Ø x 10' COPPER GROUND ROD. BOND ALL METAL STRUCTURES, EQUIPMENT, AND LIGHTING PROTECTION DOWN CONDUCTOR TO GROUND ROD USING #2 COPPER CONDUCTOR WITHIN PVC CONDUIT. REFER TO TYPICAL LIGHTNING PROTECTION GROUNDING DETAIL AND TYPICAL PANEL GROUNDING DETAIL FOR ADDITIONAL INFORMATION/REQUIREMENTS.
2. LIGHTNING PROTECTION DOWN CONDUCTOR. CONCEAL IN PVC CONDUIT WITHIN EXTERIOR WALL. REFER TO "LIGHTNING PROTECTION FOR STRUCTURES" SPECIFICATION FOR LIGHTNING PROTECTION SYSTEM REQUIREMENTS AND ADDITIONAL INFORMATION.
3. ACCESS HATCH (BELOW). CONTRACTOR TO KEEP AREA CLEAR AND COORDINATE FINAL LOCATION/REQUIREMENTS WITH APPLICABLE CONTRACTORS.
4. GROUND RING. GROUND RING TO BE BURIED AT MINIMUM 3 FEET BELOW FINISHED GRADE. GROUND RING TO BE KEPT AT MINIMUM OF 3 FEET AWAY FROM BUILDINGS, STRUCTURES, AND EQUIPMENT AT ALL TIMES. PROVIDE AND INSTALL 3/4"Ø x 10' GROUND RODS AT EACH CORNER OF GROUND RING FOR A TOTAL OF FOUR (4) GROUND RODS. BOND ALL METAL STRUCTURES, EQUIPMENT, AND LIGHTNING PROTECTION DOWN CONDUCTOR TO GROUND RING. ALL GROUND CONDUCTORS SHALL BE #2 COPPER, U.O.N.
5. CONTRACTOR TO PROVIDE ALL REQUIRED STAINLESS STEEL UNISTRUT AND ASSOCIATED MOUNTING BRACKETS, ACCESSORIES, ETC... TO MOUNT ELECTRICAL EQUIPMENT TO HANDRAIL. COORDINATE FINAL LOCATION WITH OWNER AND APPLICABLE TRADE CONTRACTORS. ALL REQUIREMENTS TO BE PER NEC.
6. ROUTING AND ATTACHMENT METHODS OF ALL CONDUITS TO BE CLOSELY COORDINATED WITH APPLICABLE TRADE CONTRACTORS AND THE OWNER TO AVOID CONFLICTS. PROVIDE ALL NECESSARY SUPPORT HARDWARE AND EQUIPMENT TO INSTALL CONDUITS AS REQUIRED. ALL SUPPORTING HARDWARE AND EQUIPMENT TO BE STAINLESS STEEL.
7. SUBMERSIBLE PUMPS ARE TO BE RELOCATED AS SHOWN. PROVIDE ALL NECESSARY CIRCUIT EXTENSIONS, SPLICES, AND JUNCTION BOXES FOR A COMPLETE AND OPERABLE SYSTEM. SPLICE KITS ARE TO BE FULLY SHIELDED, SEPARABLE, AND INSULATED AS MANUFACTURED BY ILSCO, OR APPROVED EQUAL.

MHE ENGINEERING
33 Airport Center Drive, Suite 202
New Windsor, NY 12553
(845) 567-3100
111 Wheatfield Drive, Suite 1
Milford, PA 18337
(570) 296-2765

BID ADDENDUM

JADE STONE ENGINEERING

STATE OF NEW YORK · JEFFREY E. ROBINSON · 095896 · LICENSED PROFESSIONAL ENGINEER

HAZARDOUS MATERIAL NOTE:

THE SERVICES PROVIDED BY MHE, INCLUDING ALL WORK DEPICTED ON MHE PLANS, DO NOT INCLUDE SERVICES RELATED TO THE IDENTIFICATION, CONTROLS OR HANDLING OF HAZARDOUS MATERIALS, INCLUDING SUCH MATERIALS AS ASBESTOS AND LEAD PAINT. ALL TESTING, IDENTIFICATION, ABATEMENT, CONTROLS, AND HANDLING OF HAZARDOUS MATERIALS SHALL BE UNDERTAKEN BY A HAZARDOUS MATERIAL CONSULTANT AND CERTIFIED PROFESSIONALS. IF SUCH MATERIALS HAVE BEEN IDENTIFIED, CONTRACTOR WILL COMMUNICATE DIRECTLY WITH HAZARDOUS MATERIAL PROFESSIONAL FOR THE PERFORMANCE OF ANY WORK ON OR ADJACENT TO SAID MATERIALS. IF UNIDENTIFIED MATERIALS OF CONCERN ARE ENCOUNTERED WHILE UNDERTAKING THE WORK SHOWN HEREON, CONTRACTOR SHALL IMMEDIATELY NOTIFY ENGINEER AND OWNER, AND SHALL OBTAIN DIRECTION FROM THE HAZARDOUS MATERIAL CONSULTANT PRIOR TO THE CONTINUATION OF WORK INVOLVING SUSPECTED MATERIAL.

UDIG·NY SAFE DIGGING STARTS HERE
CALL 811

UNAUTHORIZED ADDITION OR ALTERATION OF THIS PLAN IS A VIOLATION OF SECTION 7209(2) OF THE NEW YORK STATE EDUCATION LAW.

ALL PRODUCTION & INTELLECTUAL PROPERTY RIGHT RESERVED ©

CAESARS LANE WWTP EXPANSION PROJECT: PHASE 2
145 CAESARS LN.
NEW WINDSOR, NY 12553
FOR TOWN OF NEW WINDSOR
555 UNION AVE.
NEW WINDSOR, NY 12553

ELECTRICAL FLOOR PLANS - DISINFECTION TANK

REVISIONS

NO.	DESCRIPTION	DATE

ISSUED DATE:	06 JUNE, 2025
DESIGN BY:	RRM
DRAWN BY:	CDJ
CHECKED BY:	MGR
REVIEWED BY:	JER

SHEET NO.
E-600

PROJECT # 18-732 PHASE #

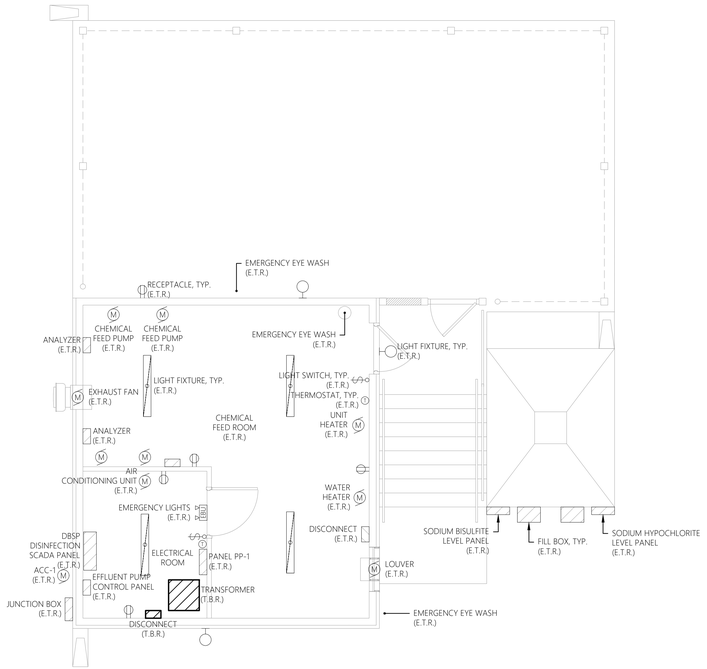

1 E-601 ELECTRICAL DEMOLITION PLAN
SCALE: 1/4" = 1'-0" DISINFECTION BUILDING

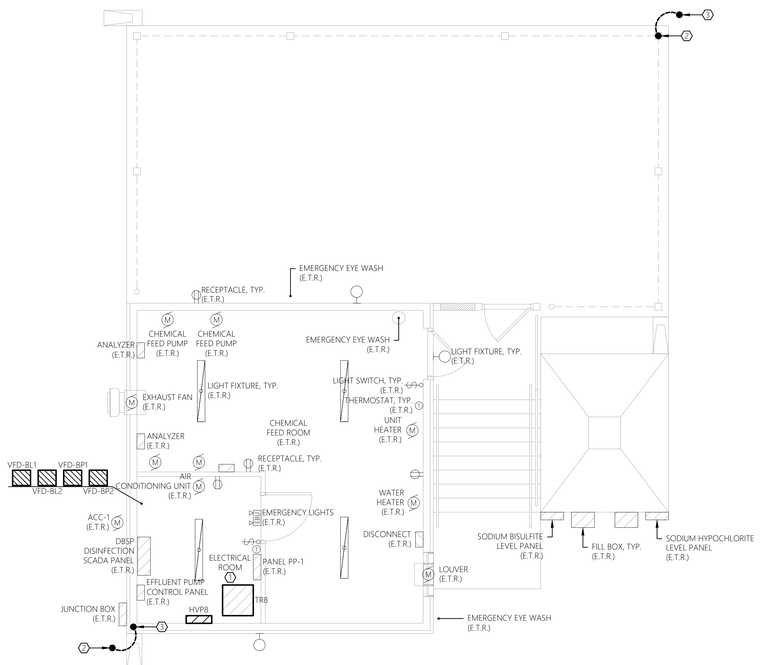

2 E-601 ELECTRICAL NEW WORK PLAN
SCALE: 1/4" = 1'-0" DISINFECTION BUILDING

0' 2' 4' 8'
SCALE: 1/4" = 1'-0"

GENERAL DEMOLITION NOTES:

MECHANICAL EQUIPMENT & MISC. ELECTRICAL EQUIPMENT:
WHERE INDICATED TO BE DEMOLISHED:
- REFER TO GENERAL CONTRACT DRAWINGS FOR AN ACCURATE DEPICTION OF ALL DEMOLITION REQUIRED AS PART OF THIS CONTRACT.
- REMOVE ALL WIRE (POWER & CONTROLS) & EXPOSED CONDUIT BACK TO SOURCE PANEL, UNLESS OTHERWISE INDICATED (UOI).
- REMOVE ANY ASSOCIATED MOTOR STARTERS, CONTROL STATIONS, &/OR DISCONNECTS, UOI.
- REMOVE CIRCUIT WIRING FROM SOURCE PANEL AND REMOVE ASSOCIATED SOURCE CIRCUIT BREAKER, UOI.
- REMOVE ALL INTERLOCK CIRCUITRY, UOI.
- PROVIDE REVISED TYPED PANELBOARD DIRECTORIES FOR ALL EXISTING TO REMAIN PANELS WHERE CIRCUITS ARE TO BE REMOVED.
- REMOVE ALL ASSOCIATED MOUNTING HARDWARE, BRACKETS, AND EQUIPMENT, UOI.

RECEPTACLES:
WHERE INDICATED TO BE DEMOLISHED:
- REMOVE ALL RECEPTACLES IMPACTED BY WALL MODIFICATIONS AND OVERALL PROJECT IMPROVEMENTS. **NOTE** ALL EXISTING RECEPTACLES MAY NOT BE SHOWN ON THESE DEMOLITION PLANS. MINOR FIELD VERIFICATION REQUIRED.
- REMOVE DEVICE, AND ALL ASSOCIATED WIRE & CONDUIT BACK TO SOURCE OR NEAREST ACTIVE JUNCTION BOX, UOI.

LIGHTING:
WHERE INDICATED TO BE DEMOLISHED:
- REMOVE ALL FIXTURES THROUGHOUT SPACE. **NOTE** ALL EXISTING LIGHTING FIXTURES MAY NOT BE SHOWN ON THESE DEMOLITION PLANS. MINOR FIELD VERIFICATION REQUIRED.
- REMOVE ALL ASSOCIATED WIRING BACK TO SOURCE, UOI.
- REMOVE SWITCHING AND CONTROL DEVICES, UOI.
- REMOVE CONTACTORS ASSOCIATED WITH LOW VOLTAGE SWITCHING DEVICES, UOI.
- DISPOSE OF ALL LAMPS IN ACCORDANCE WITH STATE/FEDERAL AND EPA REQUIREMENTS.

PANELBOARD REMOVAL AND REPLACEMENT:
- REFER TO SINGLE LINE DIAGRAMS FOR SCOPE OF WORK.

CIRCUIT AND FEEDER REMOVAL AND REPLACEMENT:
- MAINTAIN ANY EXISTING NON-IMPACTED PANELBOARDS AND ANY NON-IMPACTED CIRCUITS WHICH ARE EXISTING TO REMAIN.
- WHERE CIRCUITS ARE AFFECTED BY MODIFICATION/REMOVAL ACTIVITIES, PROVIDE NECESSARY CIRCUIT EXTENSIONS AND ALL NECESSARY LABOR/MATERIALS AS NECESSARY TO REPAIR AND RE-CONNECT CIRCUIT(S).
- ANY CIRCUITS/FEEDERS WHICH REQUIRE SHUTDOWN TO ACCOMMODATE WORK SHALL BE COORDINATED WITH THE OWNER WELL IN ADVANCE.

BUILDING/STRUCTURE GROUND SYSTEM:
- CONTRACTOR TO CAREFULLY PROTECT AND MAINTAIN ALL GROUND SYSTEMS ASSOCIATED WITH BUILDINGS/STRUCTURES EXISTING TO REMAIN.
- CONTRACTOR TO REMOVE ALL GROUND SYSTEMS ASSOCIATED WITH BUILDING/STRUCTURES TO BE REMOVED.
- GROUND SYSTEM COMPONENTS MAY INCLUDE, BUT ARE NOT LIMITED TO, GROUNDING CONDUCTORS, JUMPERS, TERMINATIONS, RODS, AND AIR TERMINALS. CONTRACTOR TO FIELD VERIFY EXISTING CONDITIONS PRIOR TO COMMENCEMENT OF DEMOLITION.

HAZARDOUS MATERIAL REMOVAL:
PERFORM WORK FOR REMOVAL AND DISPOSAL OF EQUIPMENT AND MATERIALS CONTAINING TOXIC SUBSTANCES REGULATED UNDER THE FEDERAL TOXIC SUBSTANCES CONTROL ACT (TSCA) IN ACCORDANCE WITH APPLICABLE FEDERAL, STATE, AND LOCAL REGULATIONS. APPLICABLE EQUIPMENT AND MATERIALS INCLUDE, BUT ARE NOT LIMITED TO:
- PCB-CONTAINING ELECTRICAL EQUIPMENT, INCLUDING TRANSFORMERS, CAPACITORS, AND SWITCHES.
- PCB- AND DEHP-CONTAINING LIGHTING BALLASTS.
- MERCURY-CONTAINING LAMPS AND TUBES, INCLUDING FLUORESCENT LAMPS, HIGH INTENSITY DISCHARGE (HID), ARC LAMPS, ULTRA-VIOLET, HIGH PRESSURE SODIUM, MERCURY VAPOR, IGNITRON TUBES, NEON, AND INCANDESCENT.
- CONTRACTOR TO COORDINATE ANY REQUIRED HAZARDOUS MATERIAL REMOVAL WITH THE OWNER AND APPLICABLE TRADE CONTRACTORS.

GENERAL SHEET NOTES:

1. REFER TO E-001 FOR ELECTRICAL LEGENDS, ABBREVIATIONS, AND GENERAL PROJECT NOTES.
2. ITEMS INDICATED TO BE REMOVED:
   2.1. REMOVE ALL CONDUCTORS AND EXPOSED CONDUIT BACK TO SOURCE (UOI).
   2.2. REMOVE CIRCUIT WIRING AND CIRCUIT BREAKER FROM SOURCE PANEL (UOI).
   2.3. REMOVE ALL ASSOCIATED CONTROL CONDUCTORS, CONDUITS, AND DEVICES (UOI).
   2.4. REMOVE ASSOCIATED STARTERS, DISCONNECTS, AND ASSOCIATED CIRCUITRY (UOI).
   2.5. REMOVE EQUIPMENT PADS & MOUNTING HARDWARE, BRACKETS, ACCESSORIES, ETC... (UOI).
   2.6. REVISE PANELBOARD AND MOTOR CONTROL CENTER DIRECTORIES/NAME PLATES AS CHANGES OCCUR (UOI).
3. THESE DEMOLITION DRAWINGS ARE SCHEMATIC IN NATURE AND ARE BASED ON CURSORY FIELD OBSERVATION AND EXISTING DRAWINGS. IT IS NOT THE INTENTION OF THESE DRAWINGS TO INDICATE EVERY DEVICE/FIXTURE REQUIRING REMOVAL/DEMO RATHER GENERAL SYSTEMS WHICH ARE TO BE REMOVED.
4. CIRCUITS NOT IN AREA OF WORK THAT ARE AFFECTED BY WORK SHALL BE OPERATIONAL DURING PROJECT. PROVIDE TEMPORARY CIRCUITS AS NECESSARY.
5. CIRCUIT, EQUIPMENT, AND DEVICE REMOVAL SHALL NOT AFFECT THE INTEGRITY OR FUNCTIONALITY OF CIRCUITS TO REMAIN. ALL CIRCUITS TO REMAIN SHALL BE MAINTAINED. PROVIDE ALL NECESSARY CIRCUIT MODIFICATIONS AND EXTENSIONS.
6. WHERE REMOVALS LEAVE HOLES AND DAMAGED SURFACES EXPOSED IN THE FINISHED WORK, PATCH AND REPAIR THESE HOLES AND DAMAGED SURFACES TO MATCH ADJACENT FINISHED SURFACES. WHERE NEW WORK IS TO BE APPLIED TO EXISTING SURFACES, PERFORM REMOVALS, AND PATCHING IN A MANNER TO PRODUCE SURFACES SUITABLE FOR RECEIVING NEW WORK. COORDINATE ALL WORK WITH APPLICABLE TRADE CONTRACTORS AND OWNER.
7. COORDINATE WITH ALL CONTRACT DRAWINGS AND TRADE CONTRACTORS FOR ADDITIONAL EQUIPMENT THAT IS TO BE DEMOLISHED. FOR ALL EQUIPMENT SHOWN/INDICATED FOR REMOVAL, DISCONNECT AND REMOVE ELECTRICAL CIRCUIT INCLUDING CONDUCTORS AND CONDUIT BACK TO SOURCE.
8. NOT ALL EQUIPMENT/DEVICES ARE SHOWN FOR CLARITY. CONTRACTOR SHALL FIELD VERIFY ALL EXISTING CONDITIONS AND REPORT DISCREPANCIES TO ENGINEER PRIOR TO COMMENCEMENT OF DEMOLITION.
9. REFER TO THE ELECTRICAL SINGLE LINE DIAGRAMS, SCHEDULES & DETAILS FOR ADDITIONAL DEMOLITION INFORMATION/REQUIREMENTS.
10. COORDINATE ALL ASPECTS OF SEQUENCE OF REMOVAL WITH THE OWNER AND CONTRACT #2. REFER TO SPECIFICATIONS AND DEMOLITION SINGLE LINE DIAGRAM FOR ADDITIONAL INFORMATION.
11. WHERE REMOVAL OF CONDUIT SYSTEM IS NOT FEASIBLE, REMOVE ALL CONDUCTORS FROM CONDUIT SYSTEM, CUT FLUSH, CAP CONDUIT SYSTEM, AND ABANDON IN PLACE. FEASIBLE IS DEFINED AS BEING LOCATED WITHIN A CONCRETE DUCT BANK OR CONCRETE SLAB. ALL OTHER INSTANCES TO HAVE THE CONDUIT & CIRCUITRY TO BE REMOVED IN THERE ENTIRETY. FIELD VERIFY AND COORDINATE FINAL REQUIREMENTS WITH THE OWNER, TYPICAL.

GENERAL NEW WORK NOTES:

1. REFER TO E-001 FOR ELECTRICAL LEGENDS, ABBREVIATIONS AND GENERAL PROJECT NOTES.
2. PROVIDE A DEDICATED GROUNDING CONDUCTOR FOR ALL ELECTRICAL EQUIPMENT AND ASSOCIATED EQUIPMENT/DEVICES.
3. EQUIPMENT & DEVICE LOCATIONS ARE SHOWN AS GENERAL IN NATURE. REFER TO ALL TRADE CONTRACT DRAWINGS AND COORDINATE WITH ALL TRADE CONTRACTORS FOR EXACT LOCATIONS. CLOSE CONTRACTOR COORDINATION REQUIRED.
4. ALL PROPOSED EQUIPMENT LOCATIONS/INSTALLATIONS TO COMPLY WITH NEC ARTICLE 110.26 'SPACES ABOUT ELECTRICAL EQUIPMENT'.
5. CONTRACTOR TO PROVIDE ALL REQUIRED MOUNTING HARDWARE, EQUIPMENT, BRACKETS, SUPPORTS, ACCESSORIES, ETC... PROVIDE AS STAINLESS STEEL IN CORROSIVE ENVIRONMENTS, EXTERIOR APPLICATIONS, OR WHERE INDICATED ON THE CONTRACT DRAWINGS.
6. NOT ALL EQUIPMENT/DEVICES MAY BE SHOWN FOR CLARITY. CONTRACTOR SHALL FIELD VERIFY ALL EXISTING AND PROPOSED CONDITIONS PRIOR TO COMMENCEMENT OF CONSTRUCTION. COORDINATE WITH APPLICABLE TRADE CONTRACTORS AND OWNER.
7. CONTRACTOR RESPONSIBLE FOR MOUNTING OF APPLICABLE TRADE CONTRACTORS FURNISHED PANELS. COORDINATE WITH APPLICABLE TRADE CONTRACTORS AND PROVIDE ALL NECESSARY MOUNTING HARDWARE/EQUIPMENT.
8. CONTRACTOR TO COORDINATE ALL ASPECTS OF SEQUENCE OF CONSTRUCTION WITH THE OWNER AND APPLICABLE TRADE CONTRACTORS.
9. CONTRACTOR TO COORDINATE ALL CONDUIT PENETRATIONS AND CONDUIT ROUTING WITH APPLICABLE TRADE CONTRACTORS AND OWNER PRIOR TO ROUGH-IN.
10. REFER TO ELECTRICAL SINGLE LINE DIAGRAMS, SPECIFICATIONS, RISER DIAGRAMS, SCHEDULES & DETAILS FOR ADDITIONAL INFORMATION/REQUIREMENTS.
11. CONTRACTOR TO PROVIDE LABEL FOR ALL PROPOSED ELECTRICAL EQUIPMENT AND DEVICES. COORDINATE FINAL LABELING REQUIREMENTS WITH THE OWNER. REFER TO SPECIFICATION SECTION 26 0553 - IDENTIFICATION FOR ELECTRICAL SYSTEMS FOR ADDITIONAL INFORMATION/REQUIREMENTS.

SHEET KEY NOTES:

1. ROUTING & ATTACHMENT METHODS OF ALL CONDUITS TO BE CLOSELY COORDINATED WITH APPLICABLE TRADE CONTRACTORS & OWNER PRIOR TO ROUGH-IN AND VERIFIED IN FIELD TO AVOID POTENTIAL CONFLICTS WITH PROPOSED EQUIPMENT, DUCT WORK, AND PIPING SYSTEMS.
2. CONTRACTOR TO PROVIDE 3/4"Φ x 10' COPPER GROUND ROD. BOND ALL METAL STRUCTURES AND LIGHTING PROTECTION DOWN CONDUCTOR TO GROUND ROD USING #2 COPPER CONDUCTOR WITHIN PVC CONDUIT. REFER TO 'TYPICAL LIGHTNING PROTECTION GROUNDING DETAIL' AND 'TYPICAL PANEL GROUNDING DETAIL' FOR ADDITIONAL INFORMATION/REQUIREMENTS.
3. LIGHTNING PROTECTION DOWN CONDUCTOR. CONCEAL IN PVC CONDUIT ALONG EXTERIOR WALL. REFER TO "LIGHTNING PROTECTION FOR STRUCTURES" SPECIFICATION FOR LIGHTNING PROTECTION SYSTEM REQUIREMENTS AND ADDITIONAL INFORMATION/REQUIREMENTS.

MHE ENGINEERING
33 Airport Center Drive, Suite 202
New Windsor, NY 12553
(845) 567-3100
111 Wheatfield Drive, Suite 1
Milford, PA 18337
(570) 296-2765

BID ADDENDUM

JADE STONE ENGINEERING

STATE OF NEW YORK
JEFFREY E. ROBINSON
095896
LICENSED PROFESSIONAL ENGINEER

HAZARDOUS MATERIAL NOTE:
THE SERVICES PROVIDED BY MHE, INCLUDING ALL WORK DEPICTED ON MHE PLANS, DO NOT INCLUDE SERVICES RELATED TO THE IDENTIFICATION, CONTROLS OR HANDLING OF HAZARDOUS MATERIALS, INCLUDING SUCH MATERIALS AS ASBESTOS AND LEAD PAINT. ALL TESTING, IDENTIFICATION, ABATEMENT, CONTROLS, AND HANDLING OF HAZARDOUS MATERIALS SHALL BE UNDERTAKEN BY A HAZARDOUS MATERIAL CONSULTANT AND CERTIFIED PROFESSIONALS. IF SUCH MATERIALS HAVE BEEN IDENTIFIED, CONTRACTOR WILL COMMUNICATE DIRECTLY WITH HAZARDOUS MATERIAL PROFESSIONAL FOR THE PERFORMANCE OF ANY WORK ON OR ADJACENT TO SAID MATERIALS. IF UNIDENTIFIED MATERIALS OF CONCERN ARE ENCOUNTERED WHILE UNDERTAKING THE WORK SHOWN HEREON, CONTRACTOR SHALL IMMEDIATELY NOTIFY ENGINEER AND OWNER, AND SHALL OBTAIN DIRECTION FROM THE HAZARDOUS MATERIAL CONSULTANT PRIOR TO THE CONTINUATION OF WORK INVOLVING SUSPECTED MATERIAL.

UDIG·NY SAFE DIGGING STARTS HERE
CALL 811

UNAUTHORIZED ADDITION OR ALTERATION OF THIS PLAN IS A VIOLATION OF SECTION 7209(2) OF THE NEW YORK STATE EDUCATION LAW.

ALL PRODUCTION & INTELLECTUAL PROPERTY RIGHT RESERVED ©

CAESARS LANE WWTP EXPANSION PROJECT: PHASE 2
145 CAESARS LN.
NEW WINDSOR, NY 12553
FOR TOWN OF NEW WINDSOR
555 UNION AVE.
NEW WINDSOR, NY 12553

ELECTRICAL FLOOR PLANS - DISINFECTION BUILDING

REVISIONS

NO.	DESCRIPTION	DATE

ISSUED DATE:	06 JUNE, 2025
DESIGN BY:	RRM
DRAWN BY:	CDJ
CHECKED BY:	MGR
REVIEWED BY:	JER

SHEET NO.
E-601

PROJECT # 18-732 PHASE #

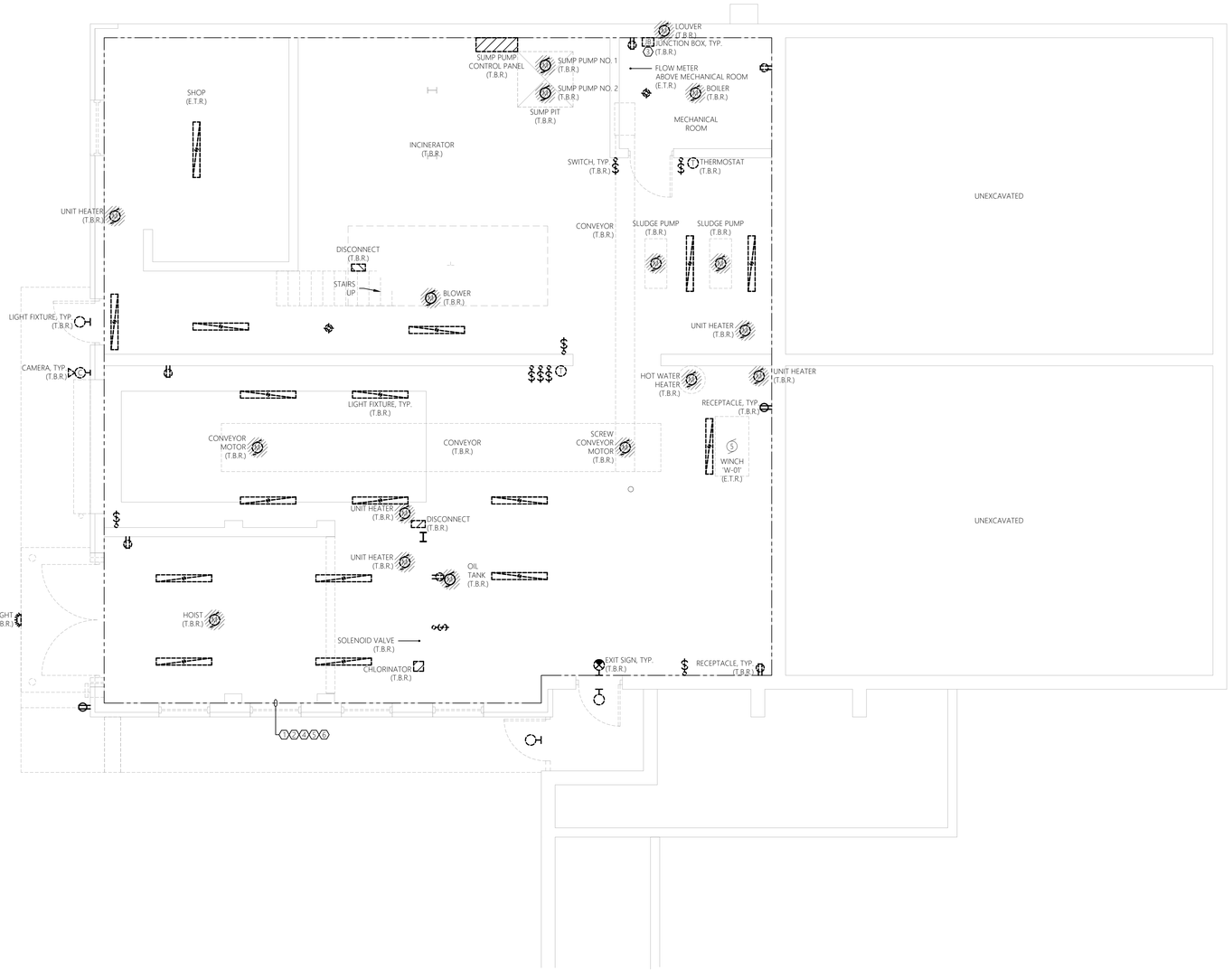

GENERAL DEMOLITION NOTES:

MECHANICAL EQUIPMENT & MISC. ELECTRICAL EQUIPMENT:
WHERE INDICATED TO BE DEMOLISHED:
- REFER TO GENERAL CONTRACT DRAWINGS FOR AN ACCURATE DEPICTION OF ALL DEMOLITION REQUIRED AS PART OF THIS CONTRACT.
- REMOVE ALL WIRE (POWER & CONTROLS) & EXPOSED CONDUIT BACK TO SOURCE PANEL, UNLESS OTHERWISE INDICATED, UOI.
- REMOVE ANY ASSOCIATED MOTOR STARTERS, CONTROL STATIONS, &/OR DISCONNECTS, UOI.
- REMOVE CIRCUIT WIRING FROM SOURCE PANEL AND REMOVE ASSOCIATED SOURCE CIRCUIT BREAKER, UOI.
- REMOVE ALL INTERLOCK CIRCUITRY, UOI.
- PROVIDE REVISED TYPED PANELBOARD DIRECTORIES FOR ALL EXISTING TO REMAIN PANELS WHERE CIRCUITS ARE TO BE REMOVED.
- REMOVE ALL ASSOCIATED MOUNTING HARDWARE, BRACKETS, AND EQUIPMENT, UOI.

RECEPTACLES:
WHERE INDICATED TO BE DEMOLISHED:
- REMOVE ALL RECEPTACLES IMPACTED BY WALL MODIFICATIONS AND OVERALL PROJECT IMPROVEMENTS. **NOTE** ALL EXISTING RECEPTACLES MAY NOT BE SHOWN ON THESE DEMOLITION PLANS. MINOR FIELD VERIFICATION REQUIRED.
- REMOVE DEVICE, AND ALL ASSOCIATED WIRE & CONDUIT BACK TO SOURCE OR NEAREST ACTIVE JUNCTION BOX, UOI.

LIGHTING:
WHERE INDICATED TO BE DEMOLISHED:
- REMOVE ALL FIXTURES THROUGHOUT SPACE. **NOTE** ALL EXISTING LIGHTING FIXTURES MAY NOT BE SHOWN ON THESE DEMOLITION PLANS. MINOR FIELD VERIFICATION REQUIRED.
- REMOVE ALL ASSOCIATED WIRING BACK TO SOURCE, UOI.
- REMOVE SWITCHING AND CONTROL DEVICES, UOI.
- REMOVE CONTACTORS ASSOCIATED WITH LOW VOLTAGE SWITCHING DEVICES, UOI.
- DISPOSE OF ALL LAMPS IN ACCORDANCE WITH STATE/FEDERAL AND EPA REQUIREMENTS.

PANELBOARD REMOVAL AND REPLACEMENT:
- REFER TO SINGLE LINE DIAGRAMS FOR SCOPE OF WORK.

CIRCUIT AND FEEDER REMOVAL AND REPLACEMENT:
- MAINTAIN ANY EXISTING NON-IMPACTED PANELBOARDS AND ANY NON-IMPACTED CIRCUITS WHICH ARE EXISTING TO REMAIN.
- WHERE CIRCUITS ARE AFFECTED BY MODIFICATION/REMOVAL ACTIVITIES, PROVIDE NECESSARY CIRCUIT EXTENSIONS AND ALL NECESSARY LABOR/MATERIALS AS NECESSARY TO REPAIR AND RE-CONNECT CIRCUIT(S).
- ANY CIRCUITS/FEEDERS WHICH REQUIRE SHUTDOWN TO ACCOMMODATE WORK SHALL BE COORDINATED WITH THE OWNER WELL IN ADVANCE.

BUILDING/STRUCTURE GROUND SYSTEM:
- CONTRACTOR TO CAREFULLY PROTECT AND MAINTAIN ALL GROUND SYSTEMS ASSOCIATED WITH BUILDINGS/STRUCTURES EXISTING TO REMAIN.
- CONTRACTOR TO REMOVE ALL GROUND SYSTEMS ASSOCIATED WITH BUILDING/STRUCTURES TO BE REMOVED.
- GROUND SYSTEM COMPONENTS MAY INCLUDE, BUT ARE NOT LIMITED TO; GROUNDING CONDUCTORS, JUMPERS, TERMINATIONS, RODS, AND AIR TERMINALS. CONTRACTOR TO FIELD VERIFY EXISTING CONDITIONS PRIOR TO COMMENCEMENT OF DEMOLITION.

HAZARDOUS MATERIAL REMOVAL:
PERFORM WORK FOR REMOVAL AND DISPOSAL OF EQUIPMENT AND MATERIALS CONTAINING TOXIC SUBSTANCES REGULATED UNDER THE FEDERAL TOXIC SUBSTANCES CONTROL ACT (TSCA) IN ACCORDANCE WITH APPLICABLE FEDERAL, STATE, AND LOCAL REGULATIONS. APPLICABLE EQUIPMENT AND MATERIALS INCLUDE, BUT ARE NOT LIMITED TO:
- PCB-CONTAINING ELECTRICAL EQUIPMENT, INCLUDING TRANSFORMERS, CAPACITORS, AND SWITCHES.
- PCB- AND DEHP-CONTAINING LIGHTING BALLASTS.
- MERCURY-CONTAINING LAMPS AND TUBES, INCLUDING FLUORESCENT LAMPS, HIGH INTENSITY DISCHARGE (HID), ARC LAMPS, ULTRA-VIOLET, HIGH PRESSURE SODIUM, MERCURY VAPOR, IGNITRON TUBES, NEON, AND INCANDESCENT.
- CONTRACTOR TO COORDINATE ANY REQUIRED HAZARDOUS MATERIAL REMOVAL WITH THE APPLICABLE CONTRACTOR, OWNER, AND ENGINEER.

GENERAL SHEET NOTES:

1. REFER TO E-001 FOR ELECTRICAL LEGENDS, ABBREVIATIONS, AND GENERAL PROJECT NOTES.
2. ITEMS INDICATED TO BE REMOVED:
   2.1. REMOVE ALL CONDUCTORS AND EXPOSED CONDUIT BACK TO SOURCE (UOI).
   2.2. REMOVE CIRCUIT WIRING AND CIRCUIT BREAKER FROM SOURCE PANEL (UOI).
   2.3. REMOVE ALL ASSOCIATED CONTROL CONDUCTORS, CONDUITS, AND DEVICES (UOI).
   2.4. REMOVE ASSOCIATED STARTERS, DISCONNECTS, AND ASSOCIATED CIRCUITRY (UOI).
   2.5. REMOVE EQUIPMENT PADS & MOUNTING HARDWARE, BRACKETS, ACCESSORIES, ETC... (UOI).
   2.6. REVISE PANELBOARD AND MOTOR CONTROL CENTER DIRECTORIES/NAME PLATES AS CHANGES OCCUR (UOI).
3. THESE DEMOLITION DRAWINGS ARE SCHEMATIC IN NATURE AND ARE BASED ON CURSORY FIELD OBSERVATION AND EXISTING DRAWINGS. IT IS NOT THE INTENTION OF THESE DRAWINGS TO INDICATE EVERY DEVICE/FIXTURE REQUIRING REMOVAL/DEMO RATHER GENERAL SYSTEMS WHICH ARE TO BE REMOVED.
4. CIRCUITS NOT IN AREA OF WORK THAT ARE AFFECTED BY WORK SHALL BE OPERATIONAL DURING PROJECT. PROVIDE TEMPORARY CIRCUITS AS NECESSARY.
5. CIRCUIT, EQUIPMENT, AND DEVICE REMOVAL SHALL NOT AFFECT THE INTEGRITY OR FUNCTIONALITY OF CIRCUITS TO REMAIN. ALL CIRCUITS TO REMAIN SHALL BE MAINTAINED. PROVIDE ALL NECESSARY CIRCUIT MODIFICATIONS AND EXTENSIONS.
6. WHERE REMOVALS LEAVE HOLES AND DAMAGED SURFACES EXPOSED IN THE FINISHED WORK, PATCH AND REPAIR THESE HOLES AND DAMAGED SURFACES TO MATCH ADJACENT FINISHED SURFACES. WHERE NEW WORK IS TO BE APPLIED TO EXISTING SURFACES, PERFORM REMOVALS, AND PATCHING IN A MANNER TO PRODUCE SURFACES SUITABLE FOR RECEIVING NEW WORK. COORDINATE ALL WORK WITH APPLICABLE CONTRACTOR, OWNER, AND ENGINEER.
7. COORDINATE WITH ALL CONTRACT DRAWINGS AND TRADE CONTRACTORS FOR ADDITIONAL EQUIPMENT THAT IS TO BE DEMOLISHED. FOR ALL EQUIPMENT SHOWN/INDICATED FOR REMOVAL, DISCONNECT AND REMOVE ELECTRICAL CIRCUIT INCLUDING CONDUCTORS AND CONDUIT BACK TO SOURCE.
8. NOT ALL EQUIPMENT/DEVICES ARE SHOWN FOR CLARITY. CONTRACTOR SHALL FIELD VERIFY ALL EXISTING CONDITIONS AND REPORT DISCREPANCIES TO ENGINEER PRIOR TO COMMENCEMENT OF DEMOLITION.
9. REFER TO THE ELECTRICAL SINGLE LINE DIAGRAMS, SCHEDULES & DETAILS FOR ADDITIONAL DEMOLITION INFORMATION/REQUIREMENTS.
10. COORDINATE ALL ASPECTS OF SEQUENCE OF REMOVAL WITH THE OWNER AND APPLICABLE CONTRACTOR. REFER TO SPECIFICATIONS AND DEMOLITION SINGLE LINE DIAGRAM FOR ADDITIONAL INFORMATION.
11. WHERE REMOVAL OF CONDUIT SYSTEM IS NOT FEASIBLE, REMOVE ALL CONDUCTORS FROM CONDUIT SYSTEM, CUT FLUSH, CAP CONDUIT SYSTEM, AND ABANDON IN PLACE. FEASIBLE IS DEFINED AS BEING LOCATED WITHIN A CONCRETE DUCT BANK OR CONCRETE SLAB. ALL OTHER INSTANCES TO HAVE THE CONDUIT & CIRCUITRY TO BE REMOVED IN THERE ENTIRETY. FIELD VERIFY AND COORDINATE FINAL REQUIREMENTS WITH THE OWNER, TYPICAL.

SHEET KEY NOTES:

1. CONTRACTOR TO PROVIDE COMPLETE ELECTRICAL DEMOLITION FOR THIS AREA (UNLESS OTHERWISE INDICATED). REMOVE THE FOLLOWING DEVICES INCLUDING BUT NOT LIMITED TO; ALL ELECTRICAL DISTRIBUTION EQUIPMENT, CONTROLLERS, CONTROL PANELS, DISCONNECTS, MOTOR STARTERS, RECEPTACLES, INTERIOR/EXTERIOR LIGHTING, JUNCTION BOXES, BONDING/GROUNDING EQUIPMENT, ELECTRIC VALVES, MOTORS (DISCONNECT & REMOVE BRANCH CIRCUITRY), AND INSTRUMENTATION/CONTROLS. REMOVE ALL ASSOCIATED CIRCUITRY (CONDUIT & CONDUCTORS) BACK TO SOURCE. COORDINATE REMOVAL EFFORTS CLOSELY WITH APPLICABLE CONTRACTOR, OWNER, AND ENGINEER.
2. CONTRACTOR TO CLOSELY COORDINATE THE REMOVAL EFFORTS OF ALL PLANT PROCESS EQUIPMENT/DEVICES SCHEDULED FOR REMOVAL WITH APPLICABLE CONTRACTOR, OWNER, AND ENGINEER. CONTRACTOR TO CLOSELY COORDINATE THE REMOVAL EFFORTS OF ALL HVAC EQUIPMENT SCHEDULED FOR REMOVAL WITH APPLICABLE CONTRACTOR, OWNER, AND ENGINEER. CONTRACTOR TO CLOSELY COORDINATE THE REMOVAL EFFORTS OF ALL PLUMBING EQUIPMENT SCHEDULED FOR REMOVAL WITH APPLICABLE CONTRACTOR, OWNER, AND ENGINEER.
3. JUNCTION BOX IS TO BE REMOVED. NOTE, ALL BOXES AND RACEWAY SYSTEMS ASSOCIATED WITH EQUIPMENT SCHEDULED FOR REMOVAL ARE TO BE REMOVED IN THEIR ENTIRETY.
4. CONTRACTOR TO DISCONNECT & REMOVE ALL EXISTING LIGHT FIXTURES, LIGHT SWITCHES, LIGHTING CONTROL DEVICES, MOUNTING HARDWARE, AND ASSOCIATED COMPONENTS IN THEIR ENTIRETY. REMOVE CIRCUITRY (CONDUIT & CONDUCTORS) BACK TO SOURCE. CONTRACTOR TO FIELD VERIFY.
5. CONTRACTOR TO PROVIDE TEMPORARY LIGHTING INCLUDING ALL CIRCUITING AND CONTROLS FOR A COMPLETE AND OPERABLE TEMPORARY LIGHTING SYSTEM THROUGHOUT THE DURATION OF PROJECT. CONTRACTOR TO COORDINATE FINAL TEMPORARY LIGHTING REQUIREMENTS WITH THE OWNER AND PROVIDE AS NECESSARY. TEMPORARY LIGHTING SYSTEMS TO BE PROVIDED FOR ALL AREAS IN WHICH THE EXISTING LIGHTING SYSTEMS ARE DISTURBED AS PART OF THIS PROJECT.
6. NOTE, CONTRACTOR TO ENSURE ALL ELECTRICAL BRANCH CIRCUITS AND CONDUITS ARE REMOVED IN THIS AREA ASSOCIATED WITH EQUIPMENT SCHEDULED FOR REMOVAL, TO AVOID CONFLICT WITH PROPOSED EQUIPMENT, DUCT WORK, AND PIPING SYSTEMS. COORDINATE ALL EFFORTS CLOSELY WITH APPLICABLE CONTRACTOR, OWNER, AND ENGINEER.

0' 2' 4' 8'
SCALE: 1/4" = 1'-0"

1 E-700 ELECTRICAL DEMOLITION - PLAN
SCALE: 1/4" = 1'-0" DEWATERING BUILDING - LOWER LEVEL

MHE ENGINEERING
33 Airport Center Drive, Suite 202
New Windsor, NY 12553
(845) 567-3100
111 Wheatfield Drive, Suite 1
Milford, PA 18337
(570) 296-2765

BID ADDENDUM

JADE STONE ENGINEERING

STATE OF NEW YORK · JEFFREY E. ROBINSON · 095896 · LICENSED PROFESSIONAL ENGINEER

HAZARDOUS MATERIAL NOTE:
THE SERVICES PROVIDED BY MHE, INCLUDING ALL WORK DEPICTED ON MHE PLANS, DO NOT INCLUDE SERVICES RELATED TO THE IDENTIFICATION, CONTROLS OR HANDLING OF HAZARDOUS MATERIALS, INCLUDING SUCH MATERIALS AS ASBESTOS AND LEAD PAINT. ALL TESTING, IDENTIFICATION, ABATEMENT, CONTROLS, AND HANDLING OF HAZARDOUS MATERIALS SHALL BE UNDERTAKEN BY A HAZARDOUS MATERIAL CONSULTANT AND CERTIFIED PROFESSIONALS. IF SUCH MATERIALS HAVE BEEN IDENTIFIED, CONTRACTOR WILL COMMUNICATE DIRECTLY WITH HAZARDOUS MATERIAL PROFESSIONAL FOR THE PERFORMANCE OF ANY WORK ON OR ADJACENT TO SAID MATERIALS. IF UNIDENTIFIED MATERIALS OF CONCERN ARE ENCOUNTERED WHILE UNDERTAKING THE WORK SHOWN HEREON, CONTRACTOR SHALL IMMEDIATELY NOTIFY ENGINEER AND OWNER, AND SHALL OBTAIN DIRECTION FROM THE HAZARDOUS MATERIAL CONSULTANT PRIOR TO THE CONTINUATION OF WORK INVOLVING SUSPECTED MATERIAL.

UDIG·NY SAFE DIGGING STARTS HERE
CALL 811

UNAUTHORIZED ADDITION OR ALTERATION OF THIS PLAN IS A VIOLATION OF SECTION 7209(2) OF THE NEW YORK STATE EDUCATION LAW.

ALL PRODUCTION & INTELLECTUAL PROPERTY RIGHT RESERVED ©

CAESARS LANE WWTP EXPANSION PROJECT: PHASE 2
145 CAESARS LN.
NEW WINDSOR, NY 12553
FOR TOWN OF NEW WINDSOR
555 UNION AVE.
NEW WINDSOR, NY 12553

ELECTRICAL DEMOLITION PLAN - DEWATERING BUILDING LOWER LEVEL

REVISIONS

NO.	DESCRIPTION	DATE

ISSUED DATE:	06 JUNE, 2025
DESIGN BY:	RRM
DRAWN BY:	CDJ
CHECKED BY:	MGR
REVIEWED BY:	JER

SHEET NO.
E-700

PROJECT # 18-732 PHASE #

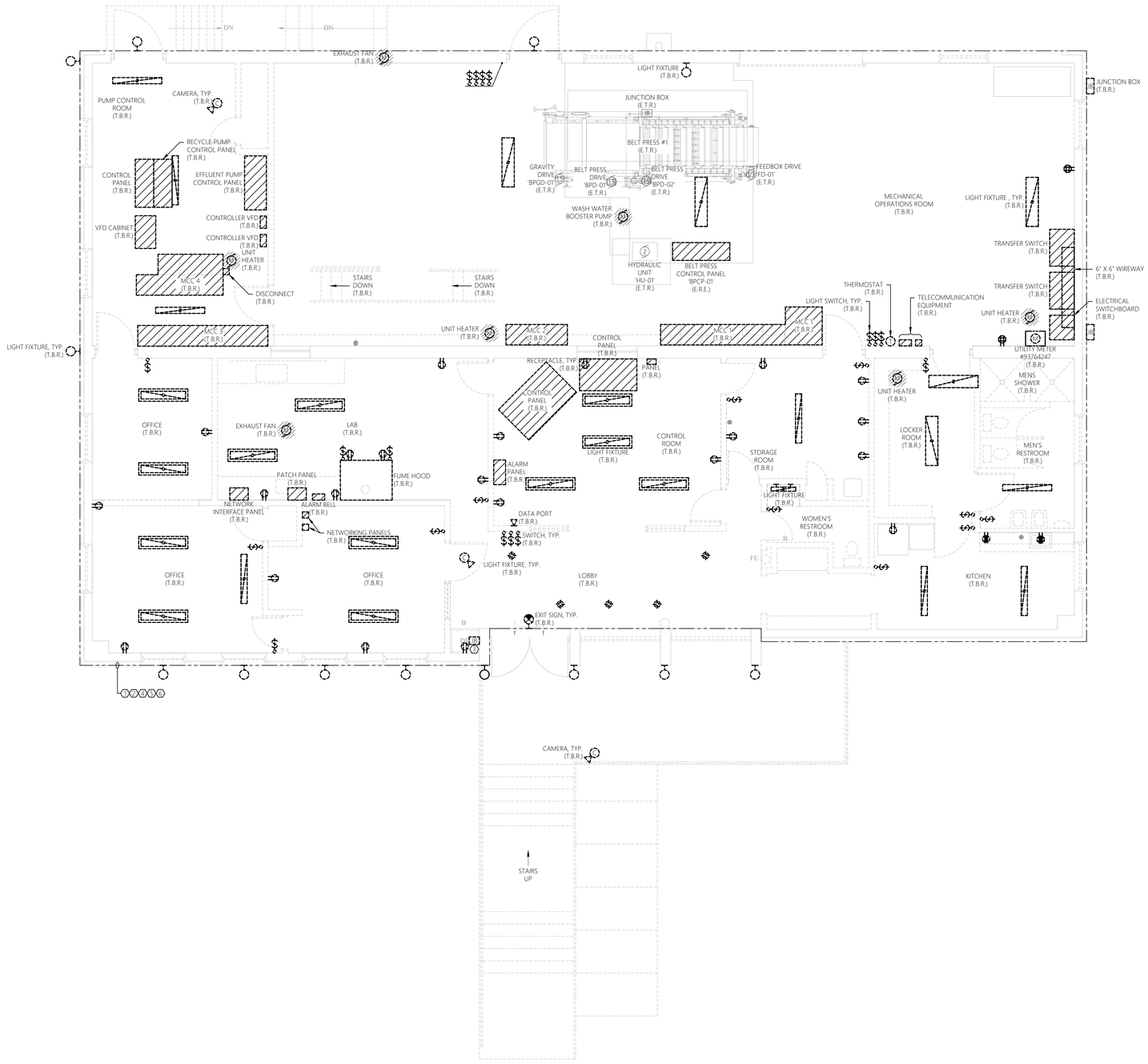

GENERAL DEMOLITION NOTES:

MECHANICAL EQUIPMENT & MISC. ELECTRICAL EQUIPMENT:
WHERE INDICATED TO BE DEMOLISHED:
- REFER TO GENERAL CONTRACT DRAWINGS FOR AN ACCURATE DEPICTION OF ALL DEMOLITION REQUIRED AS PART OF THIS CONTRACT.
- REMOVE ALL WIRE (POWER & CONTROLS) & EXPOSED CONDUIT BACK TO SOURCE PANEL, UNLESS OTHERWISE INDICATED, UOI.
- REMOVE ANY ASSOCIATED MOTOR STARTERS, CONTROL STATIONS, &/OR DISCONNECTS, UOI.
- REMOVE CIRCUIT WIRING FROM SOURCE PANEL AND REMOVE ASSOCIATED SOURCE CIRCUIT BREAKER, UOI.
- REMOVE ALL INTERLOCK CIRCUITRY, UOI.
- PROVIDE REVISED TYPED PANELBOARD DIRECTORIES FOR ALL EXISTING TO REMAIN PANELS WHERE CIRCUITS ARE TO BE REMOVED.
- REMOVE ALL ASSOCIATED MOUNTING HARDWARE, BRACKETS, AND EQUIPMENT, UOI.

RECEPTACLES:
WHERE INDICATED TO BE DEMOLISHED:
- REMOVE ALL RECEPTACLES IMPACTED BY WALL MODIFICATIONS AND OVERALL PROJECT IMPROVEMENTS. **NOTE** ALL EXISTING RECEPTACLES MAY NOT BE SHOWN ON THESE DEMOLITION PLANS. MINOR FIELD VERIFICATION REQUIRED.
- REMOVE DEVICE, AND ALL ASSOCIATED WIRE & CONDUIT BACK TO SOURCE OR NEAREST ACTIVE JUNCTION BOX, UOI.

LIGHTING:
WHERE INDICATED TO BE DEMOLISHED:
- REMOVE ALL FIXTURES THROUGHOUT SPACE. **NOTE** ALL EXISTING LIGHTING FIXTURES MAY NOT BE SHOWN ON THESE DEMOLITION PLANS. MINOR FIELD VERIFICATION REQUIRED.
- REMOVE ALL ASSOCIATED WIRING BACK TO SOURCE, UOI.
- REMOVE SWITCHING AND CONTROL DEVICES, UOI.
- REMOVE CONTACTORS ASSOCIATED WITH LOW VOLTAGE SWITCHING DEVICES, UOI.
- DISPOSE OF ALL LAMPS IN ACCORDANCE WITH STATE/FEDERAL AND EPA REQUIREMENTS.

PANELBOARD REMOVAL AND REPLACEMENT:
- REFER TO SINGLE LINE DIAGRAMS FOR SCOPE OF WORK.

CIRCUIT AND FEEDER REMOVAL AND REPLACEMENT:
- MAINTAIN ANY EXISTING NON-IMPACTED PANELBOARDS AND ANY NON-IMPACTED CIRCUITS WHICH ARE EXISTING TO REMAIN.
- WHERE CIRCUITS ARE AFFECTED BY MODIFICATION/REMOVAL ACTIVITIES, PROVIDE NECESSARY CIRCUIT EXTENSIONS AND ALL NECESSARY LABOR/MATERIALS AS NECESSARY TO REPAIR AND RE-CONNECT CIRCUIT(S).
- ANY CIRCUITS/FEEDERS WHICH REQUIRE SHUTDOWN TO ACCOMMODATE WORK SHALL BE COORDINATED WITH THE OWNER WELL IN ADVANCE.

BUILDING/STRUCTURE GROUND SYSTEM:
- CONTRACTOR TO CAREFULLY PROTECT AND MAINTAIN ALL GROUND SYSTEMS ASSOCIATED WITH BUILDINGS/STRUCTURES EXISTING TO REMAIN.
- CONTRACTOR TO REMOVE ALL GROUND SYSTEMS ASSOCIATED WITH BUILDING/STRUCTURES TO BE REMOVED.
- GROUND SYSTEM COMPONENTS MAY INCLUDE, BUT ARE NOT LIMITED TO; GROUNDING CONDUCTORS, JUMPERS, TERMINATIONS, RODS, AND AIR TERMINALS. CONTRACTOR TO FIELD VERIFY EXISTING CONDITIONS PRIOR TO COMMENCEMENT OF DEMOLITION.

HAZARDOUS MATERIAL REMOVAL:
PERFORM WORK FOR REMOVAL AND DISPOSAL OF EQUIPMENT AND MATERIALS CONTAINING TOXIC SUBSTANCES REGULATED UNDER THE FEDERAL TOXIC SUBSTANCES CONTROL ACT (TSCA) IN ACCORDANCE WITH APPLICABLE FEDERAL, STATE, AND LOCAL REGULATIONS. APPLICABLE EQUIPMENT AND MATERIALS INCLUDE, BUT ARE NOT LIMITED TO:
- PCB-CONTAINING ELECTRICAL EQUIPMENT, INCLUDING TRANSFORMERS, CAPACITORS, AND SWITCHES.
- PCB- AND DEHP-CONTAINING LIGHTING BALLASTS.
- MERCURY-CONTAINING LAMPS AND TUBES, INCLUDING FLUORESCENT LAMPS, HIGH INTENSITY DISCHARGE (HID), ARC LAMPS, ULTRA-VIOLET, HIGH PRESSURE SODIUM, MERCURY VAPOR, IGNITRON TUBES, NEON, AND INCANDESCENT.
- CONTRACTOR TO COORDINATE ANY REQUIRED HAZARDOUS MATERIAL REMOVAL WITH THE APPLICABLE CONTRACTOR, OWNER, AND ENGINEER.

GENERAL SHEET NOTES:

1. REFER TO E-001 FOR ELECTRICAL LEGENDS, ABBREVIATIONS, AND GENERAL PROJECT NOTES.
2. ITEMS INDICATED TO BE REMOVED:
   2.1. REMOVE ALL CONDUCTORS AND EXPOSED CONDUIT BACK TO SOURCE (UOI).
   2.2. REMOVE CIRCUIT WIRING AND CIRCUIT BREAKER FROM SOURCE PANEL (UOI).
   2.3. REMOVE ALL ASSOCIATED CONTROL CONDUCTORS, CONDUITS, AND DEVICES (UOI).
   2.4. REMOVE ASSOCIATED STARTERS, DISCONNECTS, AND ASSOCIATED CIRCUITRY (UOI).
   2.5. REMOVE EQUIPMENT PADS & MOUNTING HARDWARE, BRACKETS, ACCESSORIES, ETC... (UOI).
   2.6. REVISE PANELBOARD AND MOTOR CONTROL CENTER DIRECTORIES/NAME PLATES AS CHANGES OCCUR (UOI).
3. THESE DEMOLITION DRAWINGS ARE SCHEMATIC IN NATURE AND ARE BASED ON CURSORY FIELD OBSERVATION AND EXISTING DRAWINGS. IT IS NOT THE INTENTION OF THESE DRAWINGS TO INDICATE EVERY DEVICE/FIXTURE REQUIRING REMOVAL/DEMO RATHER GENERAL SYSTEMS WHICH ARE TO BE REMOVED.
4. CIRCUITS NOT IN AREA OF WORK THAT ARE AFFECTED BY WORK SHALL BE OPERATIONAL DURING PROJECT. PROVIDE TEMPORARY CIRCUITS AS NECESSARY.
5. CIRCUIT, EQUIPMENT, AND DEVICE REMOVAL SHALL NOT AFFECT THE INTEGRITY OR FUNCTIONALITY OF CIRCUITS TO REMAIN. ALL CIRCUITS TO REMAIN SHALL BE MAINTAINED. PROVIDE ALL NECESSARY CIRCUIT MODIFICATIONS AND EXTENSIONS.
6. WHERE REMOVALS LEAVE HOLES AND DAMAGED SURFACES EXPOSED IN THE FINISHED WORK, PATCH AND REPAIR THESE HOLES AND DAMAGED SURFACES TO MATCH ADJACENT FINISHED SURFACES. WHERE NEW WORK IS TO BE APPLIED TO EXISTING SURFACES, PERFORM REMOVALS, AND PATCHING IN A MANNER TO PRODUCE SURFACES SUITABLE FOR RECEIVING NEW WORK. COORDINATE ALL WORK WITH APPLICABLE CONTRACTOR, OWNER, AND ENGINEER.
7. COORDINATE WITH ALL CONTRACT DRAWINGS AND TRADE CONTRACTORS FOR ADDITIONAL EQUIPMENT THAT IS TO BE DEMOLISHED. FOR ALL EQUIPMENT SHOWN/INDICATED FOR REMOVAL, DISCONNECT AND REMOVE ELECTRICAL CIRCUIT INCLUDING CONDUCTORS AND CONDUIT BACK TO SOURCE.
8. NOT ALL EQUIPMENT/DEVICES ARE SHOWN FOR CLARITY. CONTRACTOR SHALL FIELD VERIFY ALL EXISTING CONDITIONS AND REPORT DISCREPANCIES TO ENGINEER PRIOR TO COMMENCEMENT OF DEMOLITION.
9. REFER TO THE ELECTRICAL SINGLE LINE DIAGRAMS, SCHEDULES & DETAILS FOR ADDITIONAL DEMOLITION INFORMATION/REQUIREMENTS.
10. COORDINATE ALL ASPECTS OF SEQUENCE OF REMOVAL WITH THE OWNER AND APPLICABLE CONTRACTOR. REFER TO SPECIFICATIONS AND DEMOLITION SINGLE LINE DIAGRAM FOR ADDITIONAL INFORMATION.
11. WHERE REMOVAL OF CONDUIT SYSTEM IS NOT FEASIBLE, REMOVE ALL CONDUCTORS FROM CONDUIT SYSTEM, CUT FLUSH, CAP CONDUIT SYSTEM, AND ABANDON IN PLACE. FEASIBLE IS DEFINED AS BEING LOCATED WITHIN A CONCRETE DUCT BANK OR CONCRETE SLAB. ALL OTHER INSTANCES TO HAVE THE CONDUIT & CIRCUITRY TO BE REMOVED IN THERE ENTIRETY. FIELD VERIFY AND COORDINATE FINAL REQUIREMENTS WITH THE OWNER, TYPICAL.

SHEET KEY NOTES:

1. CONTRACTOR TO PROVIDE COMPLETE ELECTRICAL DEMOLITION FOR THIS AREA (UNLESS OTHERWISE INDICATED); REMOVE THE FOLLOWING DEVICES INCLUDING BUT NOT LIMITED TO; ALL ELECTRICAL DISTRIBUTION EQUIPMENT, CONTROLLERS, CONTROL PANELS, DISCONNECTS, MOTOR STARTERS, RECEPTACLES, INTERIOR/EXTERIOR LIGHTING, JUNCTION BOXES, BONDING/GROUNDING EQUIPMENT, ELECTRIC VALVES, MOTORS (DISCONNECT & REMOVE BRANCH CIRCUITRY), AND INSTRUMENTATION/CONTROLS. REMOVE ALL ASSOCIATED CIRCUITRY (CONDUIT & CONDUCTORS) BACK TO SOURCE. COORDINATE REMOVAL EFFORTS CLOSELY WITH APPLICABLE CONTRACTOR, OWNER, AND ENGINEER.
2. CONTRACTOR TO CLOSELY COORDINATE THE REMOVAL EFFORTS OF ALL PLANT PROCESS EQUIPMENT/DEVICES SCHEDULED FOR REMOVAL WITH APPLICABLE CONTRACTOR, OWNER, AND ENGINEER. CONTRACTOR TO CLOSELY COORDINATE THE REMOVAL EFFORTS OF ALL HVAC EQUIPMENT SCHEDULED FOR REMOVAL WITH APPLICABLE CONTRACTOR, OWNER, AND ENGINEER. CONTRACTOR TO CLOSELY COORDINATE THE REMOVAL EFFORTS OF ALL PLUMBING EQUIPMENT SCHEDULED FOR REMOVAL WITH APPLICABLE CONTRACTOR, OWNER, AND ENGINEER.
3. JUNCTION BOX IS TO BE REMOVED. NOTE, ALL BOXES AND RACEWAY SYSTEMS ASSOCIATED WITH EQUIPMENT SCHEDULED FOR REMOVAL ARE TO BE REMOVED IN THEIR ENTIRETY.
4. CONTRACTOR TO DISCONNECT & REMOVE ALL EXISTING LIGHT FIXTURES, LIGHT SWITCHES, LIGHTING CONTROL DEVICES, MOUNTING HARDWARE, AND ASSOCIATED COMPONENTS IN THEIR ENTIRETY. REMOVE CIRCUITRY (CONDUIT & CONDUCTORS) BACK TO SOURCE. CONTRACTOR TO FIELD VERIFY.
5. CONTRACTOR TO PROVIDE TEMPORARY LIGHTING INCLUDING ALL CIRCUITING AND CONTROLS FOR A COMPLETE AND OPERABLE TEMPORARY LIGHTING SYSTEM THROUGHOUT THE DURATION OF PROJECT. CONTRACTOR TO COORDINATE FINAL TEMPORARY LIGHTING REQUIREMENTS WITH THE OWNER AND PROVIDE AS NECESSARY. TEMPORARY LIGHTING SYSTEMS TO BE PROVIDED FOR ALL AREAS IN WHICH THE EXISTING LIGHTING SYSTEMS ARE DISTURBED AS PART OF THIS PROJECT.
6. NOTE, CONTRACTOR TO ENSURE ALL ELECTRICAL BRANCH CIRCUITS AND CONDUITS ARE REMOVED IN THIS AREA ASSOCIATED WITH EQUIPMENT SCHEDULED FOR REMOVAL, TO AVOID CONFLICT WITH PROPOSED EQUIPMENT, DUCT WORK, AND PIPING SYSTEMS. COORDINATE ALL EFFORTS CLOSELY WITH APPLICABLE CONTRACTOR, OWNER, AND ENGINEER.

0' 2' 4' 8'
SCALE: 1/4" = 1'-0"

1 E-701 ELECTRICAL DEMOLITION PLAN
SCALE: 1/4" = 1'-0"
DEWATERING BUILDING - UPPER LEVEL

MHE ENGINEERING
33 Airport Center Drive, Suite 202
New Windsor, NY 12553
(845) 567-3100
111 Wheatfield Drive, Suite 1
Milford, PA 18337
(570) 296-2765

BID ADDENDUM

JADE STONE ENGINEERING

STATE OF NEW YORK
JEFFREY E. ROBINSON
095896
LICENSED PROFESSIONAL ENGINEER

HAZARDOUS MATERIAL NOTE:
THE SERVICES PROVIDED BY MHE, INCLUDING ALL WORK DEPICTED ON MHE PLANS, DO NOT INCLUDE SERVICES RELATED TO THE IDENTIFICATION, CONTROLS OR HANDLING OF HAZARDOUS MATERIALS, INCLUDING SUCH MATERIALS AS ASBESTOS AND LEAD PAINT. ALL TESTING, IDENTIFICATION, ABATEMENT, CONTROLS, AND HANDLING OF HAZARDOUS MATERIALS SHALL BE UNDERTAKEN BY A HAZARDOUS MATERIAL CONSULTANT AND CERTIFIED PROFESSIONALS. IF SUCH MATERIALS HAVE BEEN IDENTIFIED, CONTRACTOR WILL COMMUNICATE DIRECTLY WITH HAZARDOUS MATERIAL PROFESSIONAL FOR THE PERFORMANCE OF ANY WORK ON OR ADJACENT TO SAID MATERIALS. IF UNIDENTIFIED MATERIALS OF CONCERN ARE ENCOUNTERED WHILE UNDERTAKING THE WORK SHOWN HEREON, CONTRACTOR SHALL IMMEDIATELY NOTIFY ENGINEER AND OWNER, AND SHALL OBTAIN DIRECTION FROM THE HAZARDOUS MATERIAL CONSULTANT PRIOR TO THE CONTINUATION OF WORK INVOLVING SUSPECTED MATERIAL.

UDIG·NY SAFE DIGGING STARTS HERE
CALL 811

UNAUTHORIZED ADDITION OR ALTERATION OF THIS PLAN IS A VIOLATION OF SECTION 7209(2) OF THE NEW YORK STATE EDUCATION LAW.

ALL PRODUCTION & INTELLECTUAL PROPERTY RIGHT RESERVED ©

CAESARS LANE WWTP EXPANSION PROJECT: PHASE 2
145 CAESARS LN.
NEW WINDSOR, NY 12553
FOR TOWN OF NEW WINDSOR
555 UNION AVE.
NEW WINDSOR, NY 12553

ELECTRICAL DEMOLITION PLAN - DEWATERING BUILDING UPPER LEVEL

REVISIONS

NO.	DESCRIPTION	DATE

ISSUED DATE:	06 JUNE, 2025
DESIGN BY:	RRM
DRAWN BY:	CDJ
CHECKED BY:	MGR
REVIEWED BY:	JER
SHEET NO.	E-701
PROJECT # 18-732	PHASE #

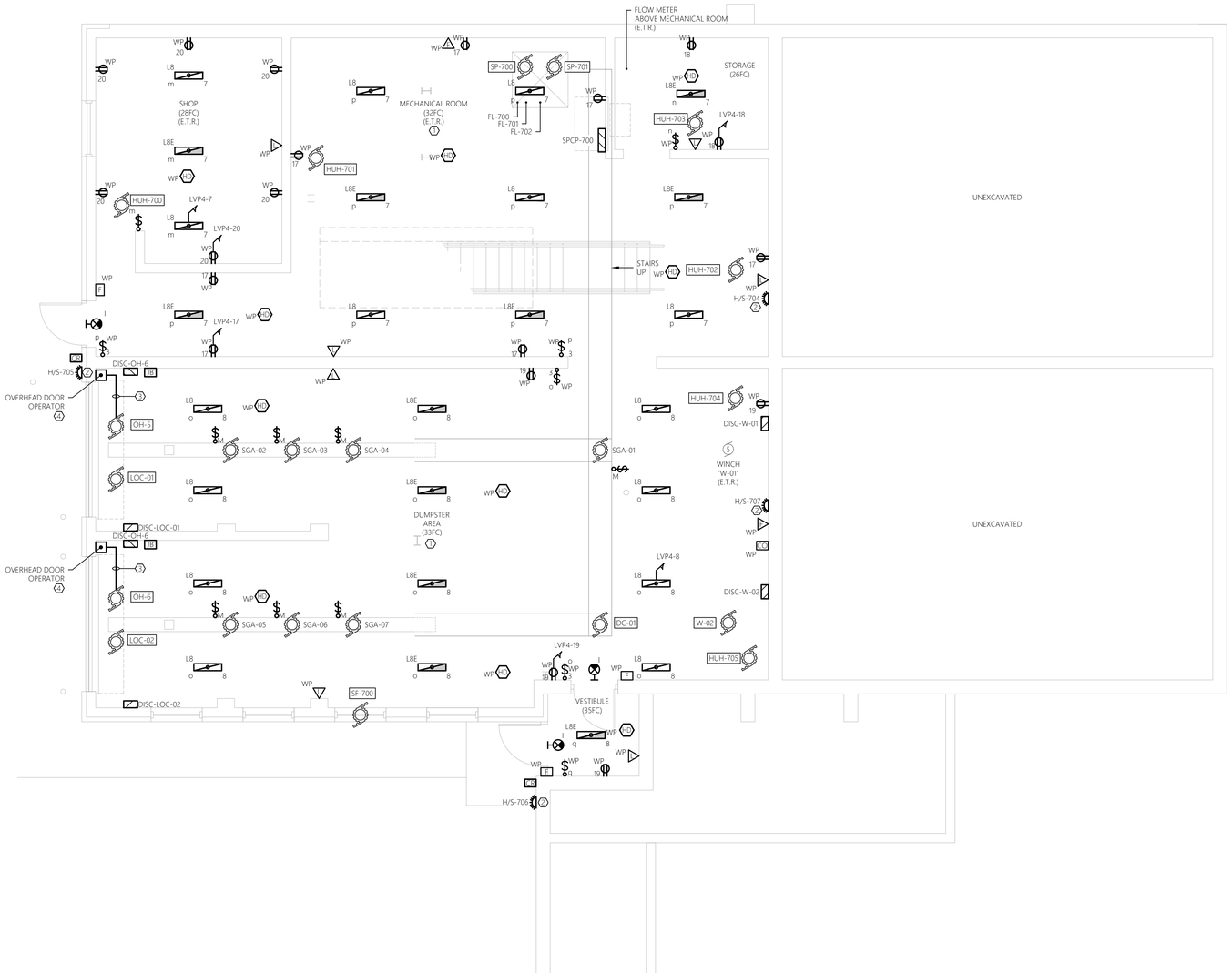

GENERAL NEW WORK NOTES:

1. REFER TO E-001 FOR ELECTRICAL LEGENDS, ABBREVIATIONS AND GENERAL PROJECT NOTES.
2. PROVIDE A DEDICATED GROUNDING CONDUCTOR FOR ALL ELECTRICAL EQUIPMENT AND ASSOCIATED EQUIPMENT/DEVICES.
3. EQUIPMENT & DEVICE LOCATIONS ARE SHOWN AS GENERAL IN NATURE. REFER TO ALL TRADE CONTRACT DRAWINGS AND COORDINATE WITH ALL TRADE CONTRACTORS FOR EXACT LOCATIONS. CLOSE CONTRACTOR COORDINATION REQUIRED.
4. ALL PROPOSED EQUIPMENT LOCATIONS/INSTALLATIONS TO COMPLY WITH NEC ARTICLE 110.26 'SPACES ABOUT ELECTRICAL EQUIPMENT'.
5. CONTRACTOR TO PROVIDE ALL REQUIRED MOUNTING HARDWARE, EQUIPMENT, BRACKETS, SUPPORTS, ACCESSORIES, ETC... PROVIDE AS STAINLESS STEEL IN CORROSIVE ENVIRONMENTS, EXTERIOR APPLICATIONS, OR WHERE INDICATED ON THE CONTRACT DRAWINGS.
6. NOT ALL EQUIPMENT/DEVICES MAY BE SHOWN FOR CLARITY. CONTRACTOR SHALL FIELD VERIFY ALL EXISTING AND PROPOSED CONDITIONS PRIOR TO COMMENCEMENT OF CONSTRUCTION. COORDINATE WITH APPLICABLE CONTRACTOR, OWNER, AND ENGINEER.
7. CONTRACTOR RESPONSIBLE FOR MOUNTING OF APPLICABLE CONTRACTOR, OWNER, AND ENGINEER FURNISHED PANELS. COORDINATE WITH APPLICABLE CONTRACTOR, OWNER, AND ENGINEER AND PROVIDE ALL NECESSARY MOUNTING HARDWARE/EQUIPMENT.
8. CONTRACTOR TO COORDINATE ALL ASPECTS OF SEQUENCE OF CONSTRUCTION WITH THE APPLICABLE CONTRACTOR, OWNER, AND ENGINEER.
9. CONTRACTOR TO ADJUST FINAL INTERIOR LIGHT FIXTURE LOCATIONS TO AVOID CONFLICTS WITH EQUIPMENT, PIPING SYSTEMS, AND DUCTWORK. COORDINATE WITH ALL TRADES.
10. CONTRACTOR TO ADJUST FINAL AIMING ANGLE OF EXTERIOR LIGHT FIXTURES TO LIGHT DESIRED AREAS AND MINIMIZE LIGHT POLLUTION. COORDINATE WITH THE OWNER. REFER TO THE LUMINAIRE SCHEDULE FOR ADDITIONAL INFORMATION/REQUIREMENTS.
11. ALL WEATHERPROOF RECEPTACLES TO BE INSTALLED AT A HEIGHT OF 36" A.F.G.
12. CONTRACTOR TO COORDINATE ALL CONDUIT PENETRATIONS AND CONDUIT ROUTING WITH APPLICABLE CONTRACTOR, OWNER, AND ENGINEER AND OWNER PRIOR TO ROUGH-IN.
13. REFER TO ELECTRICAL SINGLE LINE DIAGRAMS, SPECIFICATIONS, RISER DIAGRAMS, SCHEDULES & DETAILS FOR ADDITIONAL INFORMATION/REQUIREMENTS.
14. CONTRACTOR TO PROVIDE LABEL FOR ALL PROPOSED ELECTRICAL EQUIPMENT AND DEVICES. COORDINATE FINAL LABELING REQUIREMENTS WITH THE OWNER. REFER TO SPECIFICATION SECTION 26 0553 - IDENTIFICATION FOR ELECTRICAL SYSTEMS FOR ADDITIONAL INFORMATION/REQUIREMENTS.

SHEET KEY NOTES:

1. ROUTING & ATTACHMENT METHODS OF ALL CONDUITS TO BE CLOSELY COORDINATED WITH APPLICABLE TRADE CONTRACTOR & OWNER PRIOR TO ROUGH-IN AND VERIFIED IN FIELD TO AVOID POTENTIAL CONFLICTS WITH PROPOSED EQUIPMENT, DUCT WORK, AND PIPING SYSTEMS.
2. HVAC VENTILATION MONITORING ALARM HORN/STROBES. INSTALL DEVICES (HORN/STROBES) AT 8'-0" ABOVE FINISHED FLOOR/GRADE. REFER TO SPECIFICATIONS AND RISER DIAGRAM FOR ADDITIONAL INFORMATION/REQUIREMENTS.
3. PROVIDE LOW VOLTAGE CONDUCTORS 1/2" CONDUIT PER MANUFACTURERS RECOMMENDATIONS FOR A COMPLETE AND OPERABLE SYSTEM. COORDINATE FINAL REQUIREMENTS WITH THE OWNER.
4. REFER TO EQUIPMENT CONNECTION SCHEDULE AND 'TYPICAL OVERHEAD DOOR RISER DIAGRAM' FOR ADDITIONAL INFORMATION/REQUIREMENTS.

SCALE: 1/4" = 1'-0"

1 E-702 ELECTRICAL NEW WORK PLAN
SCALE: 1/4" = 1'-0" DEWATERING BUILDING - LOWER LEVEL

MHE ENGINEERING
33 Airport Center Drive, Suite 202
New Windsor, NY 12553
(845) 587-3100
111 Wheatfield Drive, Suite 1
Milford, PA 18337
(570) 296-2765

BID ADDENDUM

JADE STONE ENGINEERING

STATE OF NEW YORK
JEFFREY E ROBINSON
095896
LICENSED PROFESSIONAL ENGINEER

HAZARDOUS MATERIAL NOTE:

THE SERVICES PROVIDED BY MHE, INCLUDING ALL WORK DEPICTED ON MHE PLANS, DO NOT INCLUDE SERVICES RELATED TO THE IDENTIFICATION, CONTROLS OR HANDLING OF HAZARDOUS MATERIALS, INCLUDING SUCH MATERIALS AS ASBESTOS AND LEAD PAINT. ALL TESTING, IDENTIFICATION, ABATEMENT, CONTROLS, AND HANDLING OF HAZARDOUS MATERIALS SHALL BE UNDERTAKEN BY A HAZARDOUS MATERIAL CONSULTANT AND CERTIFIED PROFESSIONALS. IF SUCH MATERIALS HAVE BEEN IDENTIFIED, CONTRACTOR WILL COMMUNICATE DIRECTLY WITH HAZARDOUS MATERIAL PROFESSIONAL FOR THE PERFORMANCE OF ANY WORK ON OR ADJACENT TO SAID MATERIALS. IF UNIDENTIFIED MATERIALS OF CONCERN ARE ENCOUNTERED WHILE UNDERTAKING THE WORK SHOWN HEREON, CONTRACTOR SHALL IMMEDIATELY NOTIFY ENGINEER AND OWNER, AND SHALL OBTAIN DIRECTION FROM THE HAZARDOUS MATERIAL CONSULTANT PRIOR TO THE CONTINUATION OF WORK INVOLVING SUSPECTED MATERIAL.

UDIG·NY SAFE DIGGING STARTS HERE
CALL 811

UNAUTHORIZED ADDITION OR ALTERATION OF THIS PLAN IS A VIOLATION OF SECTION 7209(2) OF THE NEW YORK STATE EDUCATION LAW.

ALL PRODUCTION & INTELLECTUAL PROPERTY RIGHT RESERVED ©

CAESARS LANE WWTP EXPANSION PROJECT: PHASE 2
145 CAESARS LN.
NEW WINDSOR, NY 12553
FOR TOWN OF NEW WINDSOR
555 UNION AVE.
NEW WINDSOR, NY 12553

ELECTRICAL
NEW WORK PLAN -
DEWATERING BUILDING
LOWER LEVEL

REVISIONS

NO.	DESCRIPTION	DATE

ISSUED DATE:	06 JUNE, 2025
DESIGN BY:	RRM
DRAWN BY:	CDJ
CHECKED BY:	MGR
REVIEWED BY:	JER

SHEET NO.

E-702

PROJECT # 18-732 PHASE #

GENERAL NEW WORK NOTES:

1. REFER TO E-001 FOR ELECTRICAL LEGENDS, ABBREVIATIONS AND GENERAL PROJECT NOTES.
2. PROVIDE A DEDICATED GROUNDING CONDUCTOR FOR ALL ELECTRICAL EQUIPMENT AND ASSOCIATED EQUIPMENT/DEVICES.
3. EQUIPMENT & DEVICE LOCATIONS ARE SHOWN AS GENERAL IN NATURE. REFER TO ALL TRADE CONTRACT DRAWINGS AND COORDINATE WITH ALL TRADE CONTRACTORS, OWNER, AND ENGINEER FOR EXACT LOCATIONS. CLOSE CONTRACTOR COORDINATION REQUIRED.
4. ALL PROPOSED EQUIPMENT LOCATIONS/INSTALLATIONS TO COMPLY WITH NEC ARTICLE 110.26 "SPACES ABOUT ELECTRICAL EQUIPMENT". CONTRACTOR TO COORDINATE INSTALLATION LOCATIONS OF ALL EQUIPMENT WITH APPLICABLE TRADE CONTRACTOR, OWNER, AND ENGINEER PRIOR TO ROUGH IN.
5. CONTRATOR TO PROVIDE ALL REQUIRED MOUNTING HARDWARE, EQUIPMENT, BRACKETS, SUPPORTS, ACCESSORIES, ETC... PROVIDE AS STAINLESS STEEL IN CORROSIVE ENVIRONMENTS, EXTERIOR APPLICATIONS, OR WHERE INDICATED ON THE CONTRACT DRAWINGS.
6. REFER TO ELECTRICAL SINGLE LINE DIAGRAMS, SPECIFICATIONS, SCHEDULES, AND DETAILS FOR ADDITIONAL INFORMATION/REQUIREMENTS.
7. CONTRACTOR TO COORDINATE ALL ASPECTS OF SEQUENCE OF CONSTRUCTION WITH OWNER, ENGINEER, AND ALL TRADE CONTRACTORS.
8. ALL WEATHERPROOF RECEPTACLES TO BE INSTALLED AT A HEIGHT OF 36" A.F.G.
9. CONTRACTOR TO PROVIDE LABEL FOR ALL PROPOSED ELECTRICAL EQUIPMENT AND DEVICES. COORDINATE FINAL LABELING REQUIREMENTS WITH THE OWNER. REFER TO SPECIFICATION SECTION 26 0553 - IDENTIFICATION FOR ELECTRICAL SYSTEMS FOR ADDITIONAL INFORMATION/REQUIREMENTS.
10. CONTRACTOR TO COORDINATE ALL CONDUIT PENETRATIONS AND ROUTING WITH ALL TRADE CONTRACTORS, OWNER, AND ENGINEER PRIOR TO ROUGH-IN TO AVOID CONFLICTS.
11. NOT ALL EQUIPMENT/DEVICES MAY BE SHOWN FOR CLARITY. CONTRACTOR SHALL FIELD VERIFY ALL EXISTING AND PROPOSED CONDITIONS PRIOR TO COMMENCEMENT OF CONSTRUCTION. COORDINATE WITH ALL TRADE CONTRACTORS, OWNER, AND ENGINEER.
12. CONTRACTOR TO ADJUST FINAL INTERIOR LIGHT FIXTURE LOCATIONS TO AVOID CONFLICTS WITH EQUIPMENT, PIPING SYSTEMS, AND DUCT WORK. COORDINATE WITH ALL TRADE CONTRACTORS, OWNER, AND ENGINEER PRIOR TO ROUGH-IN.
13. CONTRACTOR TO ADJUST FINAL AIMING ANGLE OF EXTERIOR LIGHT FIXTURES TO LIGHT DESIRED AREAS AND MINIMIZE LIGHT POLLUTION. COORDINATE WITH ALL TRADE CONTRACTORS, OWNER, AND ENGINEER.

SHEET KEY NOTES:

1. CONTRACTOR TO PROVIDE 3/4"Ø x 10' COPPER GROUND ROD. BOND ALL METAL STRUCTURES, EQUIPMENT, AND LIGHTING PROTECTION DOWN CONDUCTOR TO GROUND ROD USING #2 COPPER CONDUCTOR WITHIN PVC CONDUIT. REFER TO TYPICAL LIGHTNING PROTECTION GROUNDING DETAIL AND TYPICAL PANEL GROUNDING DETAIL FOR ADDITIONAL INFORMATION/REQUIREMENTS.
2. LIGHTNING PROTECTION DOWN CONDUCTOR. CONCEAL IN PVC CONDUIT AND ATTACH CONDUIT TO EXTERIOR WALL. CONTRACTOR TO WORK WITH CERTIFIED LIGHTNING PROTECTION INSTALLER TO PROVIDE COMPLETE BUILDING LIGHTNING PROTECTION SYSTEM IN ACCORDANCE WITH NFPA. UPON COMPLETION PROVIDE UL MASTER LABEL. REFER TO SPECIFICATION SECTION 26 4113 LIGHTNING PROTECTION FOR ADDITIONAL INFORMATION/REQUIREMENTS.
3. CONTRACTOR TO PROVIDE WALL MOUNT BRACKETS FOR INSTALLATION OF TRANSFORMER ON WALL ABOVE PANEL.
4. FURNACE/BOILER EMERGENCY SHUTDOWN. TYPICAL OF THREE (3). REFER TO ELECTRICAL DETAILS FOR ADDITIONAL INFORMATION. COORDINATE FINAL LOCATION/REQUIREMENTS WITH APPLICABLE CONTRACTOR.
5. HVAC VENTILATION MONITORING ALARM HORN/STROBES. INSTALL DEVICES (HORN/STROBES) AT 8'-0" ABOVE FINISHED FLOOR/GRADE. REFER TO SPECIFICATIONS AND RISER DIAGRAM FOR ADDITIONAL INFORMATION/REQUIREMENTS.
6. GROUND RING. GROUND RING TO BE BURIED AT MINIMUM 3 FEET BELOW FINISHED GRADE. GROUND RING TO BE KEPT AT MINIMUM OF 3 FEET AWAY FROM BUILDINGS, STRUCTURES, AND EQUIPMENT AT ALL TIMES. PROVIDE AND INSTALL 3/4"Ø x 10' GROUND RODS AT EACH CORNER OF GROUND RING FOR A TOTAL OF FOUR (4) GROUND RODS. BOND ALL METAL STRUCTURES, EQUIPMENT, AND LIGHTNING PROTECTION DOWN CONDUCTOR TO GROUND RING. ALL GROUND CONDUCTORS SHALL BE #2 COPPER, U.O.N.
7. CONTRACTOR TO PROVIDE ONE (1) 120V, 20A PHOTO CONTROL WITH ADJUSTABLE SHIELD FOR CONTROL OF EXTERIOR LIGHTING CIRCUITS. INTERLOCK WITH ASTRONOMICAL TIME SWITCHES. CONFIRM FINAL LOCATIONS WITH THE OWNER PRIOR TO ROUGH-IN. INSTALL PER MANUFACTURER'S RECOMMENDATIONS.
8. PROVIDE LOW VOLTAGE CONDUCTORS 1/2" CONDUIT PER MANUFACTURERS RECOMMENDATIONS FOR A COMPLETE AND OPERABLE SYSTEM. COORDINATE FINAL REQUIREMENTS WITH THE OWNER.
9. REFER TO EQUIPMENT CONNECTION SCHEDULE AND 'TYPICAL OVERHEAD DOOR RISER DIAGRAM' FOR ADDITIONAL INFORMATION/REQUIREMENTS.
10. CONTRACTOR TO PROVIDE AS WATTSTOPPER RT-200 ASTRONOMICAL TIME SWITCH OR APPROVED EQUALWITHIN NEMA 1 ENCLOSURE. SWITCH TO CONTROL PROPOSED EXTERIOR WALL MOUNTED LIGHT FIXTURES TYPES 'WP1' & 'WP1E'. PROGRAM TIME SWITCH FOR LIGHTING 'ON' AT ASTRONOMICAL SUNSET AND 'OFF' AT ASTRONOMICAL SUNRISE. FINAL ON/OFF PROGRAMMING PARAMETERS TO BE COORDINATED WITH THE OWNER.

SCALE: 1/4" = 1'-0"

1 E-703 ELECTRICAL NEW WORK PLAN
SCALE: 1/4" = 1'-0" DEWATERING BUILDING - UPPER LEVEL

MHE ENGINEERING
33 Airport Center Drive, Suite 202
New Windsor, NY 12553
(845) 587-3100
111 Wheatfield Drive, Suite 1
Milford, PA 18337
(570) 296-2765

BID ADDENDUM

JADE STONE ENGINEERING

STATE OF NEW YORK
JEFFREY E. ROBINSON
095896
LICENSED PROFESSIONAL ENGINEER

HAZARDOUS MATERIAL NOTE:

THE SERVICES PROVIDED BY MHE, INCLUDING ALL WORK DEPICTED ON MHE PLANS, DO NOT INCLUDE SERVICES RELATED TO THE IDENTIFICATION, CONTROLS OR HANDLING OF HAZARDOUS MATERIALS, INCLUDING SUCH MATERIALS AS ASBESTOS AND LEAD PAINT. ALL TESTING, IDENTIFICATION, ABATEMENT, CONTROLS, AND HANDLING OF HAZARDOUS MATERIALS SHALL BE UNDERTAKEN BY A HAZARDOUS MATERIAL CONSULTANT AND CERTIFIED PROFESSIONALS. IF SUCH MATERIALS HAVE BEEN IDENTIFIED, CONTRACTOR WILL COMMUNICATE DIRECTLY WITH HAZARDOUS MATERIAL PROFESSIONAL FOR THE PERFORMANCE OF ANY WORK ON OR ADJACENT TO SAID MATERIALS. IF UNIDENTIFIED MATERIALS OF CONCERN ARE ENCOUNTERED WHILE UNDERTAKING THE WORK SHOWN HEREON, CONTRACTOR SHALL IMMEDIATELY NOTIFY ENGINEER AND OWNER, AND SHALL OBTAIN DIRECTION FROM THE HAZARDOUS MATERIAL CONSULTANT PRIOR TO THE CONTINUATION OF WORK INVOLVING SUSPECTED MATERIAL.

UDIG·NY SAFE DIGGING STARTS HERE
CALL 811

UNAUTHORIZED ADDITION OR ALTERATION OF THIS PLAN IS A VIOLATION OF SECTION 7209(2) OF THE NEW YORK STATE EDUCATION LAW.

ALL PRODUCTION & INTELLECTUAL PROPERTY RIGHT RESERVED ©

CAESARS LANE WWTP EXPANSION PROJECT: PHASE 2
145 CAESARS LN.
NEW WINDSOR, NY 12553
FOR TOWN OF NEW WINDSOR
555 UNION AVE.
NEW WINDSOR, NY 12553

ELECTRICAL NEW WORK PLAN - DEWATERING BUILDING UPPER LEVEL

REVISIONS

NO.	DESCRIPTION	DATE

ISSUED DATE:	06 JUNE, 2025
DESIGN BY:	RRM
DRAWN BY:	CDJ
CHECKED BY:	MGR
REVIEWED BY:	JER

SHEET NO.

E-703

PROJECT # 18-732 PHASE #

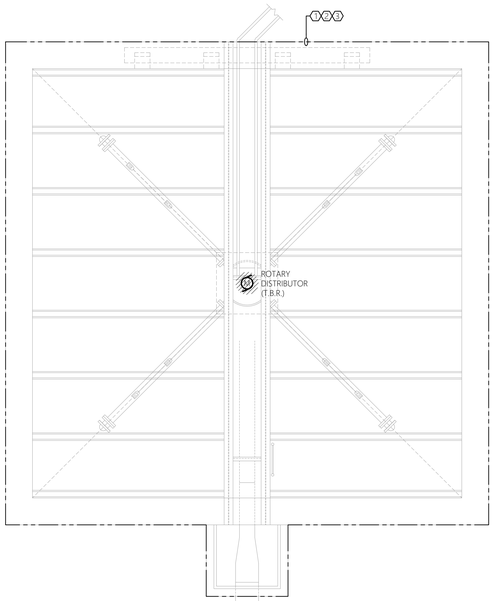

1 E-800 ELECTRICAL DEMOLITION PLAN
SCALE: 1/4" = 1'-0" TRICKLING FILTER #1

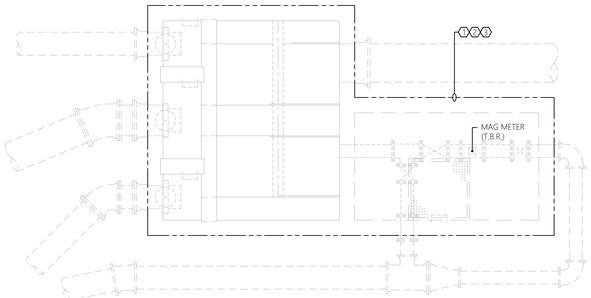

2 E-800 ELECTRICAL DEMOLITION PLAN
SCALE: 1/4" = 1'-0" TRICKLING FILTER DISTRIBUTION BOX

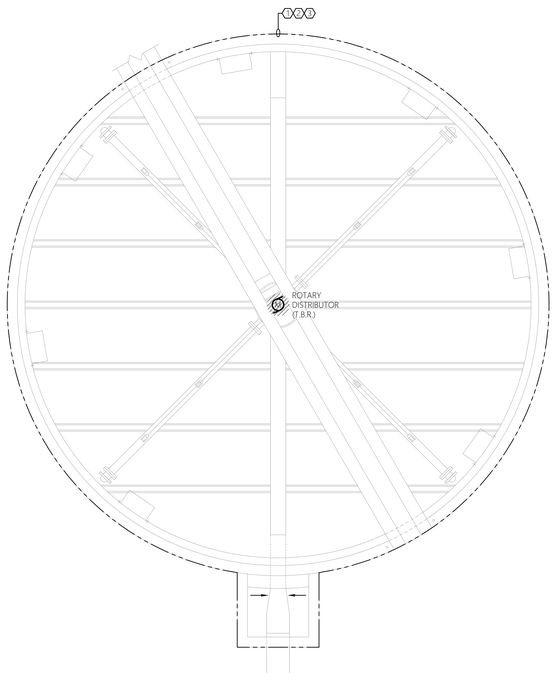

3 E-800 ELECTRICAL DEMOLITION PLAN
SCALE: 1/4" = 1'-0" TRICKLING FILTER #2

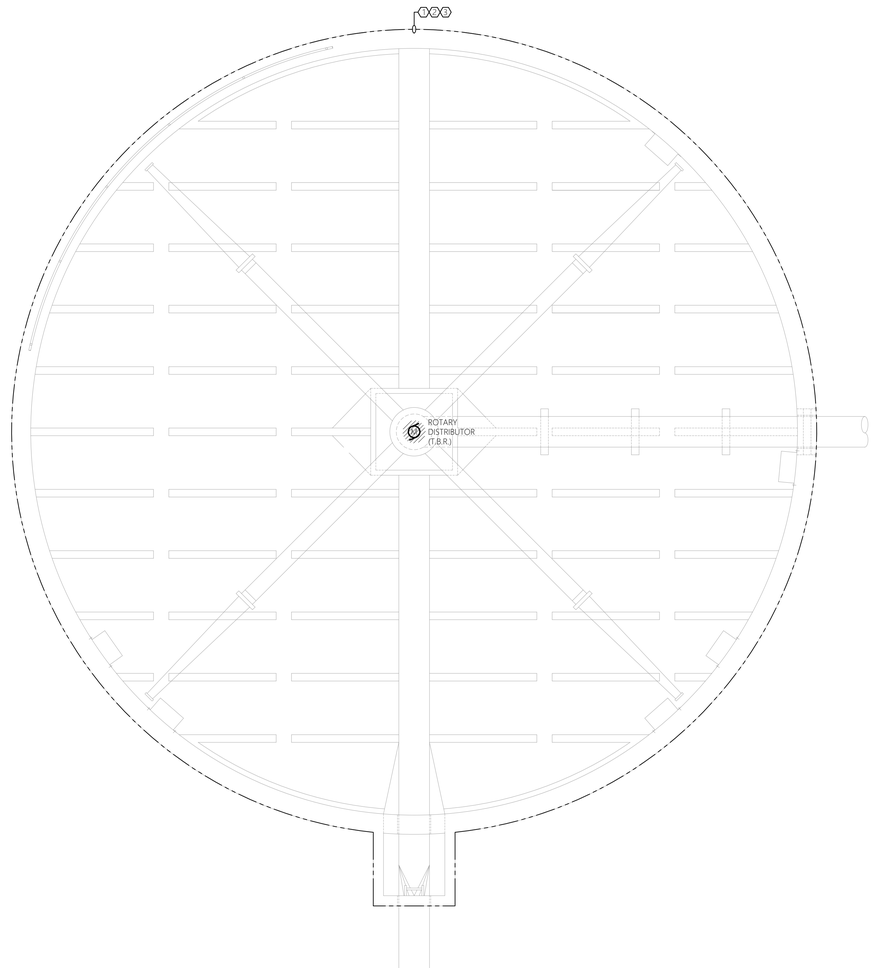

4 E-800 ELECTRICAL DEMOLITION PLAN
SCALE: 1/4" = 1'-0" TRICKLING FILTER #3

0' 2' 4' 8'
SCALE: 1/4" = 1'-0"

GENERAL DEMOLITION NOTES:

MECHANICAL EQUIPMENT & MISC. ELECTRICAL EQUIPMENT:
WHERE INDICATED TO BE DEMOLISHED:
- REFER TO GENERAL CONTRACT DRAWINGS FOR AN ACCURATE DEPICTION OF ALL DEMOLITION REQUIRED AS PART OF THIS CONTRACT.
- REMOVE ALL WIRE (POWER & CONTROLS) & EXPOSED CONDUIT BACK TO SOURCE PANEL, UNLESS OTHERWISE INDICATED, UOI.
- REMOVE ANY ASSOCIATED MOTOR STARTERS, CONTROL STATIONS, &/OR DISCONNECTS, UOI.
- REMOVE CIRCUIT WIRING FROM SOURCE PANEL AND REMOVE ASSOCIATED SOURCE CIRCUIT BREAKER, UOI.
- REMOVE ALL INTERLOCK CIRCUITRY, UOI.
- PROVIDE REVISED TYPED PANELBOARD DIRECTORIES FOR ALL EXISTING TO REMAIN PANELS WHERE CIRCUITS ARE TO BE REMOVED.
- REMOVE ALL ASSOCIATED MOUNTING HARDWARE, BRACKETS, AND EQUIPMENT, UOI.

RECEPTACLES:
WHERE INDICATED TO BE DEMOLISHED:
- REMOVE ALL RECEPTACLES IMPACTED BY WALL MODIFICATIONS AND OVERALL PROJECT IMPROVEMENTS. **NOTE** ALL EXISTING RECEPTACLES MAY NOT BE SHOWN ON THESE DEMOLITION PLANS. MINOR FIELD VERIFICATION REQUIRED.
- REMOVE DEVICE, AND ALL ASSOCIATED WIRE & CONDUIT BACK TO SOURCE OR NEAREST ACTIVE JUNCTION BOX, UOI.

LIGHTING:
WHERE INDICATED TO BE DEMOLISHED:
- REMOVE ALL FIXTURES THROUGHOUT SPACE. **NOTE** ALL EXISTING LIGHTING FIXTURES MAY NOT BE SHOWN ON THESE DEMOLITION PLANS. MINOR FIELD VERIFICATION REQUIRED.
- REMOVE ALL ASSOCIATED WIRING BACK TO SOURCE, UOI.
- REMOVE SWITCHING AND CONTROL DEVICES, UOI.
- REMOVE CONTACTORS ASSOCIATED WITH LOW VOLTAGE SWITCHING DEVICES, UOI.
- DISPOSE OF ALL LAMPS IN ACCORDANCE WITH STATE/FEDERAL AND EPA REQUIREMENTS.

PANELBOARD REMOVAL AND REPLACEMENT:
- REFER TO SINGLE LINE DIAGRAMS FOR SCOPE OF WORK.

CIRCUIT AND FEEDER REMOVAL AND REPLACEMENT:
- MAINTAIN ANY EXISTING NON-IMPACTED PANELBOARDS AND ANY NON-IMPACTED CIRCUITS WHICH ARE EXISTING TO REMAIN.
- WHERE CIRCUITS ARE AFFECTED BY MODIFICATION/REMOVAL ACTIVITIES, PROVIDE NECESSARY CIRCUIT EXTENSIONS AND ALL NECESSARY LABOR/MATERIALS AS NECESSARY TO REPAIR AND RE-CONNECT CIRCUIT(S).
- ANY CIRCUITS/FEEDERS WHICH REQUIRE SHUTDOWN TO ACCOMMODATE WORK SHALL BE COORDINATED WITH THE OWNER WELL IN ADVANCE.

BUILDING/STRUCTURE GROUND SYSTEM:
- CONTRACTOR TO CAREFULLY PROTECT AND MAINTAIN ALL GROUND SYSTEMS ASSOCIATED WITH BUILDINGS/STRUCTURES EXISTING TO REMAIN.
- CONTRACTOR TO REMOVE ALL GROUND SYSTEMS ASSOCIATED WITH BUILDING/STRUCTURES TO BE REMOVED.
- GROUND SYSTEM COMPONENTS MAY INCLUDE, BUT ARE NOT LIMITED TO, GROUNDING CONDUCTORS, JUMPERS, TERMINATIONS, RODS, AND AIR TERMINALS. CONTRACTOR TO FIELD VERIFY EXISTING CONDITIONS PRIOR TO COMMENCEMENT OF DEMOLITION.

HAZARDOUS MATERIAL REMOVAL:
PERFORM WORK FOR REMOVAL AND DISPOSAL OF EQUIPMENT AND MATERIALS CONTAINING TOXIC SUBSTANCES REGULATED UNDER THE FEDERAL TOXIC SUBSTANCES CONTROL ACT (TSCA) IN ACCORDANCE WITH APPLICABLE FEDERAL, STATE, AND LOCAL REGULATIONS. APPLICABLE EQUIPMENT AND MATERIALS INCLUDE, BUT ARE NOT LIMITED TO:
- PCB-CONTAINING ELECTRICAL EQUIPMENT, INCLUDING TRANSFORMERS, CAPACITORS, AND SWITCHES.
- PCB- AND DEHP-CONTAINING LIGHTING BALLASTS.
- MERCURY-CONTAINING LAMPS AND TUBES, INCLUDING FLUORESCENT LAMPS, HIGH INTENSITY DISCHARGE (HID), ARC LAMPS, ULTRA-VIOLET, HIGH PRESSURE SODIUM, MERCURY VAPOR, IGNITRON TUBES, NEON, AND INCANDESCENT.
- CONTRACTOR TO COORDINATE ANY REQUIRED HAZARDOUS MATERIAL REMOVAL WITH THE OWNER AND ENGINEER.

GENERAL SHEET NOTES:

1. REFER TO E-001 FOR ELECTRICAL LEGENDS, ABBREVIATIONS, AND GENERAL PROJECT NOTES.
2. ITEMS INDICATED TO BE REMOVED:
   2.1. REMOVE ALL CONDUCTORS AND EXPOSED CONDUIT BACK TO SOURCE (UOI).
   2.2. REMOVE CIRCUIT WIRING AND CIRCUIT BREAKER FROM SOURCE PANEL (UOI).
   2.3. REMOVE ALL ASSOCIATED CONTROL CONDUCTORS, CONDUITS, AND DEVICES (UOI).
   2.4. REMOVE ASSOCIATED STARTERS, DISCONNECTS, AND ASSOCIATED CIRCUITRY (UOI).
   2.5. REMOVE EQUIPMENT PADS & MOUNTING HARDWARE, BRACKETS, ACCESSORIES, ETC... (UOI).
   2.6. REVISE PANELBOARD AND MOTOR CONTROL CENTER DIRECTORIES/NAME PLATES AS CHANGES OCCUR (UOI).
3. THESE DEMOLITION DRAWINGS ARE SCHEMATIC IN NATURE AND ARE BASED ON CURSORY FIELD OBSERVATION AND EXISTING DRAWINGS. IT IS NOT THE INTENTION OF THESE DRAWINGS TO INDICATE EVERY DEVICE/FIXTURE REQUIRING REMOVAL/DEMO RATHER GENERAL SYSTEMS WHICH ARE TO BE REMOVED.
4. CIRCUITS NOT IN AREA OF WORK THAT ARE AFFECTED BY WORK SHALL BE OPERATIONAL DURING PROJECT. PROVIDE TEMPORARY CIRCUITS AS NECESSARY.
5. CIRCUIT, EQUIPMENT, AND DEVICE REMOVAL SHALL NOT AFFECT THE INTEGRITY OR FUNCTIONALITY OF CIRCUITS TO REMAIN. ALL CIRCUITS TO REMAIN SHALL BE MAINTAINED. PROVIDE ALL NECESSARY CIRCUIT MODIFICATIONS AND EXTENSIONS.
6. WHERE REMOVALS LEAVE HOLES AND DAMAGED SURFACES EXPOSED IN THE FINISHED WORK, PATCH AND REPAIR THESE HOLES AND DAMAGED SURFACES TO MATCH ADJACENT FINISHED SURFACES. WHERE NEW WORK IS TO BE APPLIED TO EXISTING SURFACES, PERFORM REMOVALS, AND PATCHING IN A MANNER TO PRODUCE SURFACES SUITABLE FOR RECEIVING NEW WORK. COORDINATE ALL WORK WITH ENGINEER AND OWNER.
7. COORDINATE WITH ALL CONTRACT DRAWINGS AND TRADE CONTRACTORS FOR ADDITIONAL EQUIPMENT THAT IS TO BE DEMOLISHED. FOR ALL EQUIPMENT SHOWN/INDICATED FOR REMOVAL, DISCONNECT AND REMOVE ELECTRICAL CIRCUIT INCLUDING CONDUCTORS AND CONDUIT BACK TO SOURCE.
8. NOT ALL EQUIPMENT/DEVICES ARE SHOWN FOR CLARITY. CONTRACTOR SHALL FIELD VERIFY ALL EXISTING CONDITIONS AND REPORT DISCREPANCIES TO ENGINEER PRIOR TO COMMENCEMENT OF DEMOLITION.
9. REFER TO THE ELECTRICAL SINGLE LINE DIAGRAMS, SCHEDULES & DETAILS FOR ADDITIONAL DEMOLITION INFORMATION/REQUIREMENTS.
10. COORDINATE ALL ASPECTS OF SEQUENCE OF REMOVAL WITH THE OWNER AND CONTRACT #2. REFER TO SPECIFICATIONS AND DEMOLITION SINGLE LINE DIAGRAM FOR ADDITIONAL INFORMATION.
11. WHERE REMOVAL OF CONDUIT SYSTEM IS NOT FEASIBLE, REMOVE ALL CONDUCTORS FROM CONDUIT SYSTEM, CUT FLUSH, CAP CONDUIT SYSTEM, AND ABANDON IN PLACE. FEASIBLE IS DEFINED AS BEING LOCATED WITHIN A CONCRETE DUCT BANK OR CONCRETE SLAB. ALL OTHER INSTANCES TO HAVE THE CONDUIT & CIRCUITRY TO BE REMOVED IN THERE ENTIRETY. FIELD VERIFY AND COORDINATE FINAL REQUIREMENTS WITH THE OWNER, TYPICAL.

SHEET KEY NOTES:

1. CONTRACTOR TO PROVIDE COMPLETE ELECTRICAL DEMOLITION FOR THIS AREA (UNLESS OTHERWISE INDICATED). REMOVE THE FOLLOWING DEVICES INCLUDING BUT NOT LIMITED TO: ALL ELECTRICAL DISTRIBUTION EQUIPMENT, CONTROLLERS, CONTROL PANELS, DISCONNECTS, MOTOR STARTERS, RECEPTACLES, INTERIOR/EXTERIOR LIGHTING, JUNCTION BOXES, BONDING/GROUNDING EQUIPMENT, ELECTRIC VALVES, MOTORS (DISCONNECT & REMOVE BRANCH CIRCUITRY), AND INSTRUMENTATION/CONTROLS. REMOVE ALL ASSOCIATED CIRCUITRY (CONDUIT & CONDUCTORS) BACK TO SOURCE. COORDINATE REMOVAL EFFORTS CLOSELY WITH ENGINEER AND OWNER.
2. CONTRACTOR TO CLOSELY COORDINATE THE REMOVAL EFFORTS OF ALL PLANT PROCESS EQUIPMENT/DEVICES SCHEDULED FOR REMOVAL WITH ENGINEER AND OWNER.
3. NOTE: CONTRACTOR TO ENSURE ALL ELECTRICAL BRANCH CIRCUITS AND CONDUITS ARE REMOVED IN THIS AREA ASSOCIATED WITH EQUIPMENT SCHEDULED FOR REMOVAL, TO AVOID CONFLICT WITH PROPOSED EQUIPMENT, AND PIPING SYSTEMS. COORDINATE ALL EFFORTS CLOSELY WITH ENGINEER AND OWNER.

MHE ENGINEERING
33 Airport Center Drive, Suite 202
New Windsor, NY 12553
(845) 587-3100
111 Wheatfield Drive, Suite 1
Milford, PA 18337
(570) 296-2765

BID ADDENDUM

JADE STONE ENGINEERING

STATE OF NEW YORK · JEFFREY E. ROBINSON · 095896 · LICENSED PROFESSIONAL ENGINEER

HAZARDOUS MATERIAL NOTE:
THE SERVICES PROVIDED BY MHE, INCLUDING ALL WORK DEPICTED ON MHE PLANS, DO NOT INCLUDE SERVICES RELATED TO THE IDENTIFICATION, CONTROLS OR HANDLING OF HAZARDOUS MATERIALS, INCLUDING SUCH MATERIALS AS ASBESTOS AND LEAD PAINT. ALL TESTING, IDENTIFICATION, ABATEMENT, CONTROLS, AND HANDLING OF HAZARDOUS MATERIALS SHALL BE UNDERTAKEN BY A HAZARDOUS MATERIAL CONSULTANT AND CERTIFIED PROFESSIONALS. IF SUCH MATERIALS HAVE BEEN IDENTIFIED, CONTRACTOR WILL COMMUNICATE DIRECTLY WITH HAZARDOUS MATERIAL PROFESSIONAL FOR THE PERFORMANCE OF ANY WORK ON OR ADJACENT TO SAID MATERIALS. IF UNIDENTIFIED MATERIALS OF CONCERN ARE ENCOUNTERED WHILE UNDERTAKING THE WORK SHOWN HEREON, CONTRACTOR SHALL IMMEDIATELY NOTIFY ENGINEER AND OWNER, AND SHALL OBTAIN DIRECTION FROM THE HAZARDOUS MATERIAL CONSULTANT PRIOR TO THE CONTINUATION OF WORK INVOLVING SUSPECTED MATERIAL.

UDIG·NY SAFE DIGGING STARTS HERE
CALL 811

UNAUTHORIZED ADDITION OR ALTERATION OF THIS PLAN IS A VIOLATION OF SECTION 7209(2) OF THE NEW YORK STATE EDUCATION LAW.

ALL PRODUCTION & INTELLECTUAL PROPERTY RIGHT RESERVED ©

CAESARS LANE WWTP EXPANSION PROJECT: PHASE 2
145 CAESARS LN.
NEW WINDSOR, NY 12553
FOR TOWN OF NEW WINDSOR
555 UNION AVE.
NEW WINDSOR, NY 12553

ELECTRICAL DEMOLITION PLANS - TRICKLING FILTERS

REVISIONS

NO.	DESCRIPTION	DATE

ISSUED DATE:	06 JUNE, 2025
DESIGN BY:	RRM
DRAWN BY:	CDJ
CHECKED BY:	MGR
REVIEWED BY:	JER

SHEET NO.
E-800

PROJECT # 18-732 PHASE #

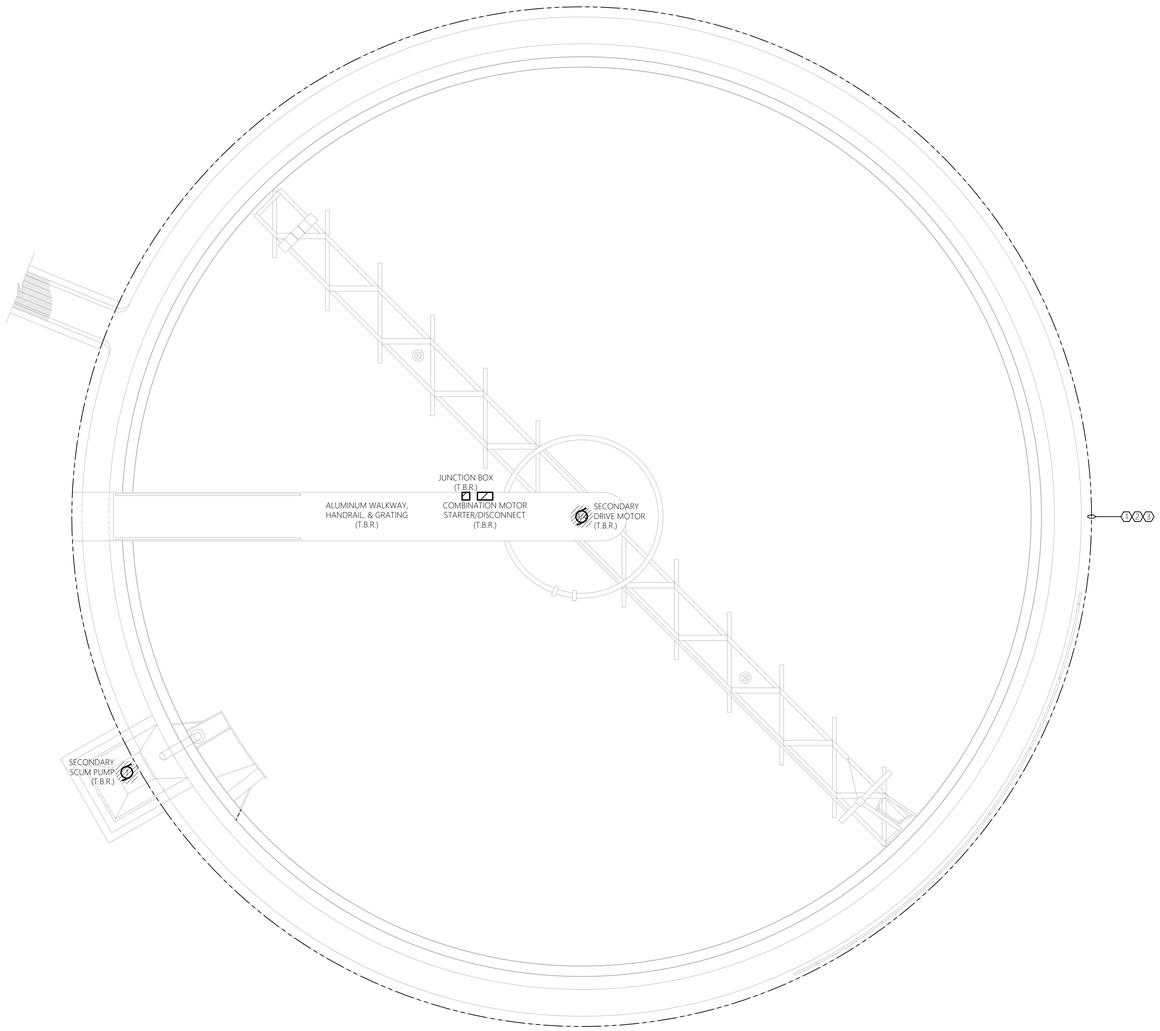

1 E-801 ELECTRICAL DEMOLITION PLAN
SCALE: 1/4" = 1'-0" SECONDARY SETTLING TANK #1 & #2

0' 2' 4' 8'
SCALE: 1/4" = 1'-0"

GENERAL DEMOLITION NOTES:

MECHANICAL EQUIPMENT & MISC. ELECTRICAL EQUIPMENT:
WHERE INDICATED TO BE DEMOLISHED:
- REFER TO GENERAL CONTRACT DRAWINGS FOR AN ACCURATE DEPICTION OF ALL DEMOLITION REQUIRED AS PART OF THIS CONTRACT.
- REMOVE ALL WIRE (POWER & CONTROLS) & EXPOSED CONDUIT BACK TO SOURCE PANEL, UNLESS OTHERWISE INDICATED, UOI.
- REMOVE ANY ASSOCIATED MOTOR STARTERS, CONTROL STATIONS, &/OR DISCONNECTS, UOI.
- REMOVE CIRCUIT WIRING FROM SOURCE PANEL AND REMOVE ASSOCIATED SOURCE CIRCUIT BREAKER, UOI.
- REMOVE ALL INTERLOCK CIRCUITRY, UOI.
- PROVIDE REVISED TYPED PANELBOARD DIRECTORIES FOR ALL EXISTING TO REMAIN PANELS WHERE CIRCUITS ARE TO BE REMOVED.
- REMOVE ALL ASSOCIATED MOUNTING HARDWARE, BRACKETS, AND EQUIPMENT, UOI.

RECEPTACLES:
WHERE INDICATED TO BE DEMOLISHED:
- REMOVE ALL RECEPTACLES IMPACTED BY WALL MODIFICATIONS AND OVERALL PROJECT IMPROVEMENTS. **NOTE** ALL EXISTING RECEPTACLES MAY NOT BE SHOWN ON THESE DEMOLITION PLANS. MINOR FIELD VERIFICATION REQUIRED.
- REMOVE DEVICE, AND ALL ASSOCIATED WIRE & CONDUIT BACK TO SOURCE OR NEAREST ACTIVE JUNCTION BOX, UOI.

LIGHTING:
WHERE INDICATED TO BE DEMOLISHED:
- REMOVE ALL FIXTURES THROUGHOUT SPACE. **NOTE** ALL EXISTING LIGHTING FIXTURES MAY NOT BE SHOWN ON THESE DEMOLITION PLANS. MINOR FIELD VERIFICATION REQUIRED.
- REMOVE ALL ASSOCIATED WIRING BACK TO SOURCE, UOI.
- REMOVE SWITCHING AND CONTROL DEVICES, UOI.
- REMOVE CONTACTORS ASSOCIATED WITH LOW VOLTAGE SWITCHING DEVICES, UOI.
- DISPOSE OF ALL LAMPS IN ACCORDANCE WITH STATE/FEDERAL AND EPA REQUIREMENTS.

PANELBOARD REMOVAL AND REPLACEMENT:
- REFER TO SINGLE LINE DIAGRAMS FOR SCOPE OF WORK.

CIRCUIT AND FEEDER REMOVAL AND REPLACEMENT:
- MAINTAIN ANY EXISTING NON-IMPACTED PANELBOARDS AND ANY NON-IMPACTED CIRCUITS WHICH ARE EXISTING TO REMAIN.
- WHERE CIRCUITS ARE AFFECTED BY MODIFICATION/REMOVAL ACTIVITIES, PROVIDE NECESSARY CIRCUIT EXTENSIONS AND ALL NECESSARY LABOR/MATERIALS AS NECESSARY TO REPAIR AND RE-CONNECT CIRCUITS).
- ANY CIRCUITS/FEEDERS WHICH REQUIRE SHUTDOWN TO ACCOMMODATE WORK SHALL BE COORDINATED WITH THE OWNER WELL IN ADVANCE.

BUILDING/STRUCTURE GROUND SYSTEM:
- CONTRACTOR TO CAREFULLY PROTECT AND MAINTAIN ALL GROUND SYSTEMS ASSOCIATED WITH BUILDINGS/STRUCTURES EXISTING TO REMAIN.
- CONTRACTOR TO REMOVE ALL GROUND SYSTEMS ASSOCIATED WITH BUILDING/STRUCTURES TO BE REMOVED.
- GROUND SYSTEM COMPONENTS MAY INCLUDE, BUT ARE NOT LIMITED TO, GROUNDING CONDUCTORS, JUMPERS, TERMINATIONS, RODS, AND AIR TERMINALS. CONTRACTOR TO FIELD VERIFY EXISTING CONDITIONS PRIOR TO COMMENCEMENT OF DEMOLITION.

HAZARDOUS MATERIAL REMOVAL:
PERFORM WORK FOR REMOVAL AND DISPOSAL OF EQUIPMENT AND MATERIALS CONTAINING TOXIC SUBSTANCES REGULATED UNDER THE FEDERAL TOXIC SUBSTANCES CONTROL ACT (TSCA) IN ACCORDANCE WITH APPLICABLE FEDERAL, STATE, AND LOCAL REGULATIONS. APPLICABLE EQUIPMENT AND MATERIALS INCLUDE, BUT ARE NOT LIMITED TO:
- PCB-CONTAINING ELECTRICAL EQUIPMENT, INCLUDING TRANSFORMERS, CAPACITORS, AND SWITCHES.
- PCB- AND DEHP-CONTAINING LIGHTING BALLASTS.
- MERCURY-CONTAINING LAMPS AND TUBES, INCLUDING FLUORESCENT LAMPS, HIGH INTENSITY DISCHARGE (HID), ARC LAMPS, ULTRA-VIOLET, HIGH PRESSURE SODIUM, MERCURY VAPOR, IGNITRON TUBES, NEON, AND INCANDESCENT.
- CONTRACTOR TO COORDINATE ANY REQUIRED HAZARDOUS MATERIAL REMOVAL WITH THE APPLICABLE CONTRACTOR, OWNER, AND ENGINEER.

GENERAL SHEET NOTES:

1. REFER TO E-001 FOR ELECTRICAL LEGENDS, ABBREVIATIONS, AND GENERAL PROJECT NOTES.
2. ITEMS INDICATED TO BE REMOVED:
   - 2.1. REMOVE ALL CONDUCTORS AND EXPOSED CONDUIT BACK TO SOURCE (UOI).
   - 2.2. REMOVE CIRCUIT WIRING AND CIRCUIT BREAKER FROM SOURCE PANEL (UOI).
   - 2.3. REMOVE ALL ASSOCIATED CONTROL CONDUCTORS, CONDUITS, AND DEVICES (UOI).
   - 2.4. REMOVE ASSOCIATED STARTERS, DISCONNECTS, AND ASSOCIATED CIRCUITRY (UOI).
   - 2.5. REMOVE EQUIPMENT PADS & MOUNTING HARDWARE, BRACKETS, ACCESSORIES, ETC... (UOI).
   - 2.6. REVISE PANELBOARD AND MOTOR CONTROL CENTER DIRECTORIES/NAME PLATES AS CHANGES OCCUR (UOI).
3. THESE DEMOLITION DRAWINGS ARE SCHEMATIC IN NATURE AND ARE BASED ON CURSORY FIELD OBSERVATION AND EXISTING DRAWINGS. IT IS NOT THE INTENTION OF THESE DRAWINGS TO INDICATE EVERY DEVICE/FIXTURE REQUIRING REMOVAL/DEMO RATHER GENERAL SYSTEMS WHICH ARE TO BE REMOVED.
4. CIRCUITS NOT IN AREA OF WORK THAT ARE AFFECTED BY WORK SHALL BE OPERATIONAL DURING PROJECT. PROVIDE TEMPORARY CIRCUITS AS NECESSARY.
5. CIRCUIT, EQUIPMENT, AND DEVICE REMOVAL SHALL NOT AFFECT THE INTEGRITY OR FUNCTIONALITY OF CIRCUITS TO REMAIN. ALL CIRCUITS TO REMAIN SHALL BE MAINTAINED. PROVIDE ALL NECESSARY CIRCUIT MODIFICATIONS AND EXTENSIONS.
6. WHERE REMOVALS LEAVE HOLES AND DAMAGED SURFACES EXPOSED IN THE FINISHED WORK, PATCH AND REPAIR THESE HOLES AND DAMAGED SURFACES TO MATCH ADJACENT FINISHED SURFACES. WHERE NEW WORK IS TO BE APPLIED TO EXISTING SURFACES, PERFORM REMOVALS, AND PATCHING IN A MANNER TO PRODUCE SURFACES SUITABLE FOR RECEIVING NEW WORK. COORDINATE ALL WORK WITH APPLICABLE CONTRACTOR, OWNER, AND ENGINEER.
7. COORDINATE WITH ALL CONTRACT DRAWINGS AND TRADE CONTRACTORS FOR ADDITIONAL EQUIPMENT THAT IS TO BE DEMOLISHED. FOR ALL EQUIPMENT SHOWN/INDICATED FOR REMOVAL, DISCONNECT AND REMOVE ELECTRICAL CIRCUIT INCLUDING CONDUCTORS AND CONDUIT BACK TO SOURCE.
8. NOT ALL EQUIPMENT/DEVICES ARE SHOWN FOR CLARITY. CONTRACTOR SHALL FIELD VERIFY ALL EXISTING CONDITIONS AND REPORT DISCREPANCIES TO ENGINEER PRIOR TO COMMENCEMENT OF DEMOLITION.
9. REFER TO THE ELECTRICAL SINGLE LINE DIAGRAMS, SCHEDULES & DETAILS FOR ADDITIONAL DEMOLITION INFORMATION/REQUIREMENTS.
10. COORDINATE ALL ASPECTS OF SEQUENCE OF REMOVAL WITH THE OWNER AND CONTRACT #2. REFER TO SPECIFICATIONS AND DEMOLITION SINGLE LINE DIAGRAM FOR ADDITIONAL INFORMATION.
11. WHERE REMOVAL OF CONDUIT SYSTEM IS NOT FEASIBLE, REMOVE ALL CONDUCTORS FROM CONDUIT SYSTEM, CUT FLUSH, CAP CONDUIT SYSTEM, AND ABANDON IN PLACE. FEASIBLE IS DEFINED AS BEING LOCATED WITHIN A CONCRETE DUCT BANK OR CONCRETE SLAB. ALL OTHER INSTANCES TO HAVE THE CONDUIT & CIRCUITRY TO BE REMOVED IN THERE ENTIRETY. FIELD VERIFY AND COORDINATE FINAL REQUIREMENTS WITH THE OWNER, TYPICAL.

SHEET KEY NOTES:

1. CONTRACTOR TO PROVIDE COMPLETE ELECTRICAL DEMOLITION FOR THIS AREA (UNLESS OTHERWISE INDICATED). REMOVE THE FOLLOWING DEVICES INCLUDING BUT NOT LIMITED TO; ALL ELECTRICAL DISTRIBUTION EQUIPMENT, CONTROLLERS, CONTROL PANELS, DISCONNECTS, MOTOR STARTERS, RECEPTACLES, INTERIOR/EXTERIOR LIGHTING, JUNCTION BOXES, BONDING/GROUNDING EQUIPMENT, ELECTRIC VALVES, MOTORS (DISCONNECT & REMOVE BRANCH CIRCUITRY), AND INSTRUMENTATION/CONTROLS. REMOVE ALL ASSOCIATED CIRCUITRY (CONDUIT & CONDUCTORS) BACK TO SOURCE. COORDINATE REMOVAL EFFORTS CLOSELY WITH APPLICABLE CONTRACTOR, OWNER, AND ENGINEER.
2. CONTRACTOR TO CLOSELY COORDINATE THE REMOVAL EFFORTS OF ALL PLANT PROCESS EQUIPMENT/DEVICES SCHEDULED FOR REMOVAL WITH APPLICABLE CONTRACTOR, OWNER, AND ENGINEER.
3. NOTE, CONTRACTOR TO ENSURE ALL ELECTRICAL BRANCH CIRCUITS AND CONDUITS ARE REMOVED IN THIS AREA ASSOCIATED WITH EQUIPMENT SCHEDULED FOR REMOVAL, TO AVOID CONFLICT WITH PROPOSED EQUIPMENT, AND PIPING SYSTEMS. COORDINATE ALL EFFORTS CLOSELY WITH APPLICABLE CONTRACTOR, OWNER, AND ENGINEER.

TYPICAL OF TWO (2):
SECONDARY SETTLING TANK #1 AND
SECONDARY SETTLING TANK #2

MHE ENGINEERING
33 Airport Center Drive, Suite 202
New Windsor, NY 12553
(845) 567-3100
111 Wheatfield Drive, Suite 1
Milford, PA 18337
(570) 296-2765

BID ADDENDUM

JADE STONE ENGINEERING

STATE OF NEW YORK
JEFFREY E ROBINSON
095896
LICENSED PROFESSIONAL ENGINEER

HAZARDOUS MATERIAL NOTE:
THE SERVICES PROVIDED BY MHE, INCLUDING ALL WORK DEPICTED ON MHE PLANS, DO NOT INCLUDE SERVICES RELATED TO THE IDENTIFICATION, CONTROLS OR HANDLING OF HAZARDOUS MATERIALS, INCLUDING SUCH MATERIALS AS ASBESTOS AND LEAD PAINT. ALL TESTING, IDENTIFICATION, ABATEMENT, CONTROLS, AND HANDLING OF HAZARDOUS MATERIALS SHALL BE UNDERTAKEN BY A HAZARDOUS MATERIAL CONSULTANT AND CERTIFIED PROFESSIONALS. IF SUCH MATERIALS HAVE BEEN IDENTIFIED, CONTRACTOR WILL COMMUNICATE DIRECTLY WITH HAZARDOUS MATERIAL PROFESSIONAL FOR THE PERFORMANCE OF ANY WORK ON OR ADJACENT TO SAID MATERIALS. IF UNIDENTIFIED MATERIALS OF CONCERN ARE ENCOUNTERED WHILE UNDERTAKING THE WORK SHOWN HEREON, CONTRACTOR SHALL IMMEDIATELY NOTIFY ENGINEER AND OWNER, AND SHALL OBTAIN DIRECTION FROM THE HAZARDOUS MATERIAL CONSULTANT PRIOR TO THE CONTINUATION OF WORK INVOLVING SUSPECTED MATERIAL.

UDIG·NY SAFE DIGGING STARTS HERE
CALL 811

UNAUTHORIZED ADDITION OR ALTERATION OF THIS PLAN IS A VIOLATION OF SECTION 7209(2) OF THE NEW YORK STATE EDUCATION LAW.

ALL PRODUCTION & INTELLECTUAL PROPERTY RIGHT RESERVED ©

CAESARS LANE WWTP EXPANSION PROJECT: PHASE 2
145 CAESARS LN.
NEW WINDSOR, NY 12553
FOR TOWN OF NEW WINDSOR
555 UNION AVE.
NEW WINDSOR, NY 12553

ELECTRICAL DEMOLITION PLANS - SECONDARY SETTLING TANKS

REVISIONS

NO.	DESCRIPTION	DATE

ISSUED DATE:	06 JUNE, 2025
DESIGN BY:	RRM
DRAWN BY:	CDJ
CHECKED BY:	MGR
REVIEWED BY:	JER

SHEET NO.
E-801

PROJECT # 18-732 PHASE #

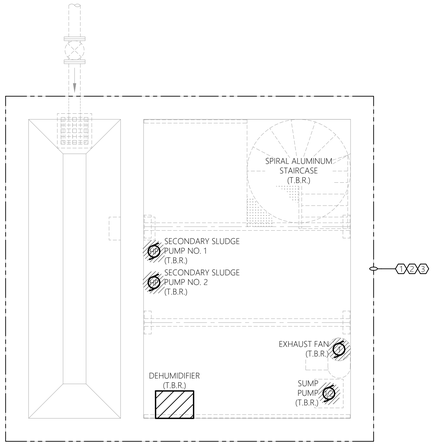

1 E-802 ELECTRICAL DEMOLITION PLAN
SCALE: 3/8" = 1'-0" SECONDARY SLUDGE PUMP PIT

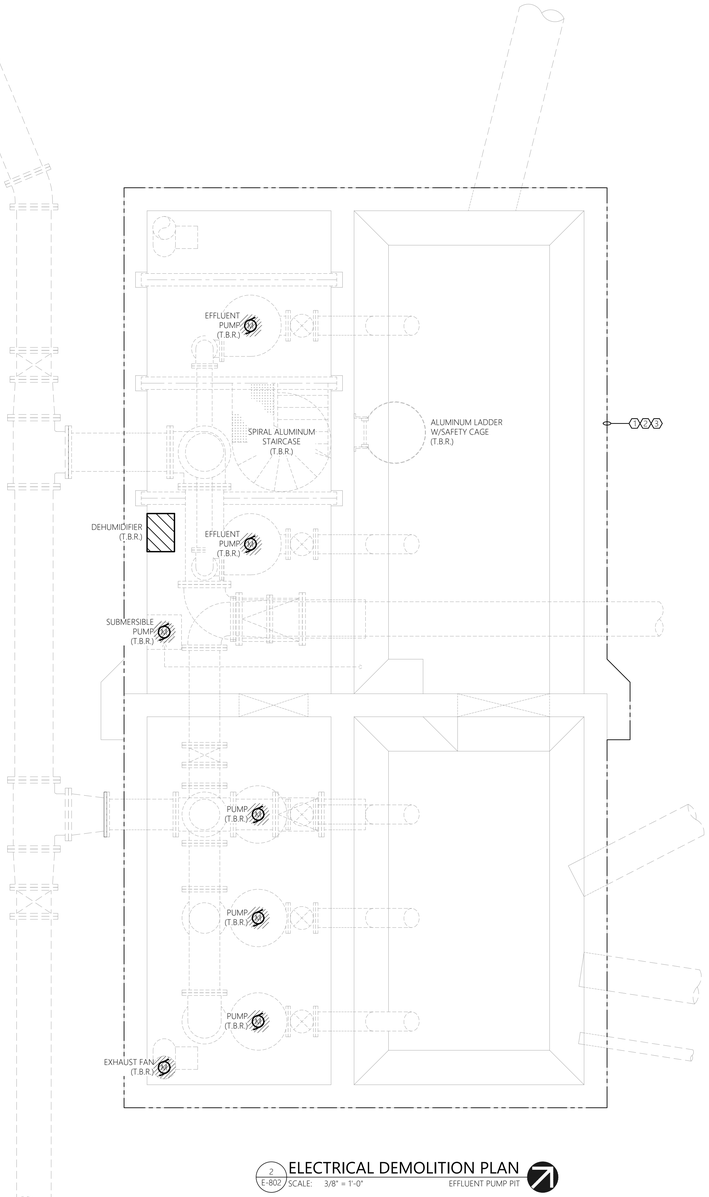

2 E-802 ELECTRICAL DEMOLITION PLAN
SCALE: 3/8" = 1'-0" EFFLUENT PUMP PIT

0' 1' 2' 4' 8'
SCALE: 3/8" = 1'-0"

GENERAL DEMOLITION NOTES:

MECHANICAL EQUIPMENT & MISC. ELECTRICAL EQUIPMENT:
WHERE INDICATED TO BE DEMOLISHED:
- REFER TO GENERAL CONTRACT DRAWINGS FOR AN ACCURATE DEPICTION OF ALL DEMOLITION REQUIRED AS PART OF THIS CONTRACT.
- REMOVE ALL WIRE (POWER & CONTROLS) & EXPOSED CONDUIT BACK TO SOURCE PANEL, UNLESS OTHERWISE INDICATED, UOI.
- REMOVE ANY ASSOCIATED MOTOR STARTERS, CONTROL STATIONS, &/OR DISCONNECTS, UOI.
- REMOVE CIRCUIT WIRING FROM SOURCE PANEL AND REMOVE ASSOCIATED SOURCE CIRCUIT BREAKER, UOI.
- REMOVE ALL INTERLOCK CIRCUITRY, UOI.
- PROVIDE REVISED TYPED PANELBOARD DIRECTORIES FOR ALL EXISTING TO REMAIN PANELS WHERE CIRCUITS ARE TO BE REMOVED.
- REMOVE ALL ASSOCIATED MOUNTING HARDWARE, BRACKETS, AND EQUIPMENT, UOI.

RECEPTACLES:
WHERE INDICATED TO BE DEMOLISHED:
- REMOVE ALL RECEPTACLES IMPACTED BY WALL MODIFICATIONS AND OVERALL PROJECT IMPROVEMENTS. **NOTE** ALL EXISTING RECEPTACLES MAY NOT BE SHOWN ON THESE DEMOLITION PLANS. MINOR FIELD VERIFICATION REQUIRED.
- REMOVE DEVICE, AND ALL ASSOCIATED WIRE & CONDUIT BACK TO SOURCE OR NEAREST ACTIVE JUNCTION BOX, UOI.

LIGHTING:
WHERE INDICATED TO BE DEMOLISHED:
- REMOVE ALL FIXTURES THROUGHOUT SPACE. **NOTE** ALL EXISTING LIGHTING FIXTURES MAY NOT BE SHOWN ON THESE DEMOLITION PLANS. MINOR FIELD VERIFICATION REQUIRED.
- REMOVE ALL ASSOCIATED WIRING BACK TO SOURCE, UOI.
- REMOVE SWITCHING AND CONTROL DEVICES, UOI.
- REMOVE CONTACTORS ASSOCIATED WITH LOW VOLTAGE SWITCHING DEVICES, UOI.
- DISPOSE OF ALL LAMPS IN ACCORDANCE WITH STATE/FEDERAL AND EPA REQUIREMENTS.

PANELBOARD REMOVAL AND REPLACEMENT:
- REFER TO SINGLE LINE DIAGRAMS FOR SCOPE OF WORK.

CIRCUIT AND FEEDER REMOVAL AND REPLACEMENT:
- MAINTAIN ANY EXISTING NON-IMPACTED PANELBOARDS AND ANY NON-IMPACTED CIRCUITS WHICH ARE EXISTING TO REMAIN.
- WHERE CIRCUITS ARE AFFECTED BY MODIFICATION/REMOVAL ACTIVITIES, PROVIDE NECESSARY CIRCUIT EXTENSIONS AND ALL NECESSARY LABOR/MATERIALS AS NECESSARY TO REPAIR AND RE-CONNECT CIRCUIT(S).
- ANY CIRCUITS/FEEDERS WHICH REQUIRE SHUTDOWN TO ACCOMMODATE WORK SHALL BE COORDINATED WITH THE OWNER WELL IN ADVANCE.

BUILDING/STRUCTURE GROUND SYSTEM:
- CONTRACTOR TO CAREFULLY PROTECT AND MAINTAIN ALL GROUND SYSTEMS ASSOCIATED WITH BUILDINGS/STRUCTURES EXISTING TO REMAIN.
- CONTRACTOR TO REMOVE ALL GROUND SYSTEMS ASSOCIATED WITH BUILDING/STRUCTURES TO BE REMOVED.
- GROUND SYSTEM COMPONENTS MAY INCLUDE, BUT ARE NOT LIMITED TO, GROUNDING CONDUCTORS, JUMPERS, TERMINATIONS, RODS, AND AIR TERMINALS. CONTRACTOR TO FIELD VERIFY EXISTING CONDITIONS PRIOR TO COMMENCEMENT OF DEMOLITION.

HAZARDOUS MATERIAL REMOVAL:
PERFORM WORK FOR REMOVAL AND DISPOSAL OF EQUIPMENT AND MATERIALS CONTAINING TOXIC SUBSTANCES REGULATED UNDER THE FEDERAL TOXIC SUBSTANCES CONTROL ACT (TSCA) IN ACCORDANCE WITH APPLICABLE FEDERAL, STATE, AND LOCAL REGULATIONS. APPLICABLE EQUIPMENT AND MATERIALS INCLUDE, BUT ARE NOT LIMITED TO:
- PCB-CONTAINING ELECTRICAL EQUIPMENT, INCLUDING TRANSFORMERS, CAPACITORS, AND SWITCHES.
- PCB- AND DEHP-CONTAINING LIGHTING BALLASTS.
- MERCURY-CONTAINING LAMPS AND TUBES, INCLUDING FLUORESCENT LAMPS, HIGH INTENSITY DISCHARGE (HID), ARC LAMPS, ULTRA-VIOLET, HIGH PRESSURE SODIUM, MERCURY VAPOR, IGNITRON TUBES, NEON, AND INCANDESCENT.
- CONTRACTOR TO COORDINATE ANY REQUIRED HAZARDOUS MATERIAL REMOVAL WITH THE APPLICABLE CONTRACTOR, OWNER, AND ENGINEER.

GENERAL SHEET NOTES:

1. REFER TO E-001 FOR ELECTRICAL LEGENDS, ABBREVIATIONS, AND GENERAL PROJECT NOTES.
2. ITEMS INDICATED TO BE REMOVED:
   2.1. REMOVE ALL CONDUCTORS AND EXPOSED CONDUIT BACK TO SOURCE (UOI).
   2.2. REMOVE CIRCUIT WIRING AND CIRCUIT BREAKER FROM SOURCE PANEL (UOI).
   2.3. REMOVE ALL ASSOCIATED CONTROL CONDUCTORS, CONDUITS, AND DEVICES (UOI).
   2.4. REMOVE ASSOCIATED STARTERS, DISCONNECTS, AND ASSOCIATED CIRCUITRY (UOI).
   2.5. REMOVE EQUIPMENT PADS & MOUNTING HARDWARE, BRACKETS, ACCESSORIES, ETC.. (UOI).
   2.6. REVISE PANELBOARD AND MOTOR CONTROL CENTER DIRECTORIES/NAME PLATES AS CHANGES OCCUR (UOI).
3. THESE DEMOLITION DRAWINGS ARE SCHEMATIC IN NATURE AND ARE BASED ON CURSORY FIELD OBSERVATION AND EXISTING DRAWINGS. IT IS NOT THE INTENTION OF THESE DRAWINGS TO INDICATE EVERY DEVICE/FIXTURE REQUIRING REMOVAL/DEMO RATHER GENERAL SYSTEMS WHICH ARE TO BE REMOVED.
4. CIRCUITS NOT IN AREA OF WORK THAT ARE AFFECTED BY WORK SHALL BE OPERATIONAL DURING PROJECT. PROVIDE TEMPORARY CIRCUITS AS NECESSARY.
5. CIRCUIT, EQUIPMENT, AND DEVICE REMOVAL SHALL NOT AFFECT THE INTEGRITY OR FUNCTIONALITY OF CIRCUITS TO REMAIN. ALL CIRCUITS TO REMAIN SHALL BE MAINTAINED. PROVIDE ALL NECESSARY CIRCUIT MODIFICATIONS AND EXTENSIONS.
6. WHERE REMOVALS LEAVE HOLES AND DAMAGED SURFACES EXPOSED IN THE FINISHED WORK, PATCH AND REPAIR THESE HOLES AND DAMAGED SURFACES TO MATCH ADJACENT FINISHED SURFACES. WHERE NEW WORK IS TO BE APPLIED TO EXISTING SURFACES, PERFORM REMOVALS, AND PATCHING IN A MANNER TO PRODUCE SURFACES SUITABLE FOR RECEIVING NEW WORK. COORDINATE ALL WORK WITH APPLICABLE CONTRACTOR, OWNER, AND ENGINEER.
7. COORDINATE WITH ALL CONTRACT DRAWINGS AND TRADE CONTRACTORS FOR ADDITIONAL EQUIPMENT THAT IS TO BE DEMOLISHED. FOR ALL EQUIPMENT SHOWN/INDICATED FOR REMOVAL, DISCONNECT AND REMOVE ELECTRICAL CIRCUIT INCLUDING CONDUCTORS AND CONDUIT BACK TO SOURCE.
8. NOT ALL EQUIPMENT/DEVICES ARE SHOWN FOR CLARITY. CONTRACTOR SHALL FIELD VERIFY ALL EXISTING CONDITIONS AND REPORT DISCREPANCIES TO ENGINEER PRIOR TO COMMENCEMENT OF DEMOLITION.
9. REFER TO THE ELECTRICAL SINGLE LINE DIAGRAMS, SCHEDULES & DETAILS FOR ADDITIONAL DEMOLITION INFORMATION/REQUIREMENTS.
10. COORDINATE ALL ASPECTS OF SEQUENCE OF REMOVAL WITH THE OWNER AND CONTRACT #2. REFER TO SPECIFICATIONS AND DEMOLITION SINGLE LINE DIAGRAM FOR ADDITIONAL INFORMATION.
11. WHERE REMOVAL OF CONDUIT SYSTEM IS NOT FEASIBLE, REMOVE ALL CONDUCTORS FROM CONDUIT SYSTEM, CUT FLUSH; CAP CONDUIT SYSTEM, AND ABANDON IN PLACE. FEASIBLE IS DEFINED AS BEING LOCATED WITHIN A CONCRETE DUCT BANK OR CONCRETE SLAB. ALL OTHER INSTANCES TO HAVE THE CONDUIT & CIRCUITRY TO BE REMOVED IN THERE ENTIRETY. FIELD VERIFY AND COORDINATE FINAL REQUIREMENTS WITH THE OWNER. TYPICAL.

SHEET KEY NOTES:

1. CONTRACTOR TO PROVIDE COMPLETE ELECTRICAL DEMOLITION FOR THIS AREA (UNLESS OTHERWISE INDICATED). REMOVE THE FOLLOWING DEVICES INCLUDING BUT NOT LIMITED TO; ALL ELECTRICAL DISTRIBUTION EQUIPMENT, CONTROLLERS, CONTROL PANELS, DISCONNECTS, MOTOR STARTERS, RECEPTACLES, INTERIOR/EXTERIOR LIGHTING, JUNCTION BOXES, BONDING/GROUNDING ELECTRODES, ELECTRIC VALVES, MOTORS (DISCONNECT & REMOVE BRANCH CIRCUITRY), AND INSTRUMENTATION/CONTROLS. REMOVE ALL ASSOCIATED CIRCUITRY BACK TO SOURCE. COORDINATE REMOVAL EFFORTS CLOSELY WITH APPLICABLE CONTRACTOR, OWNER, AND ENGINEER.
2. CONTRACTOR TO CLOSELY COORDINATE THE REMOVAL EFFORTS OF ALL PLANT PROCESS EQUIPMENT/DEVICES SCHEDULED FOR REMOVAL WITH APPLICABLE CONTRACTOR, OWNER, AND ENGINEER.
3. NOTE, CONTRACTOR TO ENSURE ALL ELECTRICAL BRANCH CIRCUITS AND CONDUITS ARE REMOVED IN THIS AREA ASSOCIATED WITH EQUIPMENT SCHEDULED FOR REMOVAL, TO AVOID CONFLICT WITH PROPOSED EQUIPMENT, AND PIPING SYSTEMS. COORDINATE ALL EFFORTS CLOSELY WITH APPLICABLE CONTRACTOR, OWNER, AND ENGINEER.

MHE ENGINEERING
33 Airport Center Drive, Suite 202
New Windsor, NY 12553
(845) 587-3100
111 Wheatfield Drive, Suite 1
Milford, PA 18337
(570) 296-2765

BID ADDENDUM

JADE STONE ENGINEERING

STATE OF NEW YORK · JEFFREY E. ROBINSON · 095896 · LICENSED PROFESSIONAL ENGINEER

HAZARDOUS MATERIAL NOTE:

THE SERVICES PROVIDED BY MHE, INCLUDING ALL WORK DEPICTED ON MHE PLANS, DO NOT INCLUDE SERVICES RELATED TO THE IDENTIFICATION, CONTROLS OR HANDLING OF HAZARDOUS MATERIALS, INCLUDING SUCH MATERIALS AS ASBESTOS AND LEAD PAINT. ALL TESTING, IDENTIFICATION, ABATEMENT, CONTROLS, AND HANDLING OF HAZARDOUS MATERIALS SHALL BE UNDERTAKEN BY A HAZARDOUS MATERIAL CONSULTANT AND CERTIFIED PROFESSIONALS. IF SUCH MATERIALS HAVE BEEN IDENTIFIED, CONTRACTOR WILL COMMUNICATE DIRECTLY WITH HAZARDOUS MATERIAL PROFESSIONAL FOR THE PERFORMANCE OF ANY WORK ON OR ADJACENT TO SAID MATERIALS. IF UNIDENTIFIED MATERIALS OF CONCERN ARE ENCOUNTERED WHILE UNDERTAKING THE WORK SHOWN HEREON, CONTRACTOR SHALL IMMEDIATELY NOTIFY ENGINEER AND OWNER, AND SHALL OBTAIN DIRECTION FROM THE HAZARDOUS MATERIAL CONSULTANT PRIOR TO THE CONTINUATION OF WORK INVOLVING SUSPECTED MATERIAL.

UDIG·NY SAFE DIGGING STARTS HERE
CALL 811

UNAUTHORIZED ADDITION OR ALTERATION OF THIS PLAN IS A VIOLATION OF SECTION 7209(2) OF THE NEW YORK STATE EDUCATION LAW.

ALL PRODUCTION & INTELLECTUAL PROPERTY RIGHT RESERVED ©

CAESARS LANE WWTP EXPANSION PROJECT: PHASE 2
145 CAESARS LN.
NEW WINDSOR, NY 12553
FOR TOWN OF NEW WINDSOR
555 UNION AVE.
NEW WINDSOR, NY 12553

ELECTRICAL DEMOLITION PLANS - UNDERGROUND STRUCTURES

REVISIONS

NO.	DESCRIPTION	DATE

ISSUED DATE:	06 JUNE, 2025
DESIGN BY:	RRM
DRAWN BY:	CDJ
CHECKED BY:	MGR
REVIEWED BY:	JER

SHEET NO.
E-802

PROJECT # 18-732 PHASE #

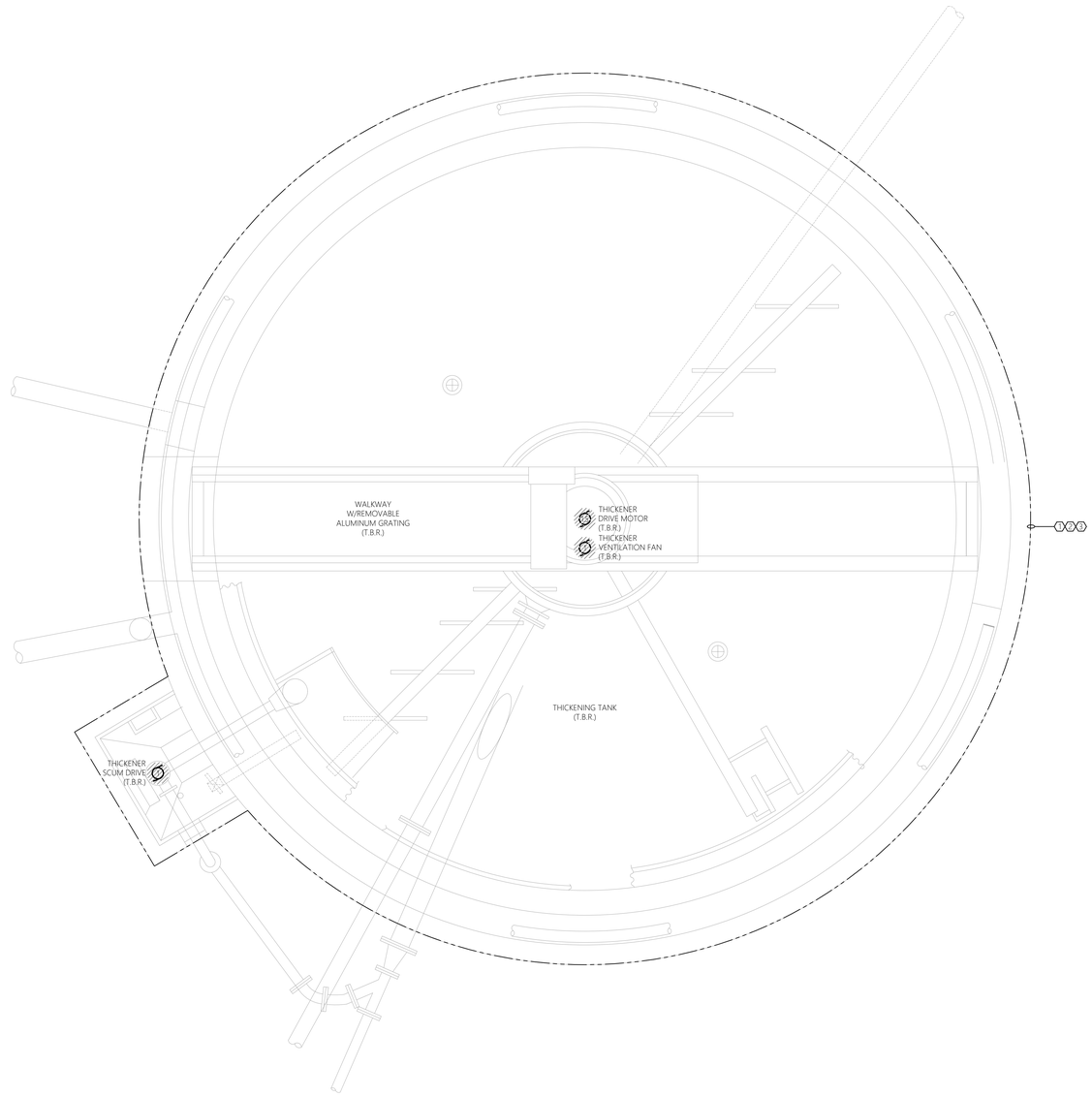

1 ELECTRICAL DEMOLITION PLAN
E-803 SCALE: 1/2" = 1'-0" THICKENING TANKS

0' 1' 2' 4'
SCALE: 1/2" = 1'-0"

GENERAL DEMOLITION NOTES:

MECHANICAL EQUIPMENT & MISC. ELECTRICAL EQUIPMENT:
WHERE INDICATED TO BE DEMOLISHED:
- REFER TO ALL TRADE CONTRACT DRAWINGS FOR AN ACCURATE DEPICTION OF ALL DEMOLITION REQUIRED AS PART OF THIS CONTRACT.
- REMOVE ALL WIRE (POWER & CONTROLS) & EXPOSED CONDUIT BACK TO SOURCE PANEL, UNLESS OTHERWISE INDICATED, UOI.
- REMOVE ANY ASSOCIATED MOTOR STARTERS, CONTROL STATIONS, &/OR DISCONNECTS, UOI.
- REMOVE CIRCUIT WIRING FROM SOURCE PANEL AND REMOVE ASSOCIATED SOURCE CIRCUIT BREAKER, UOI.
- REMOVE ALL INTERLOCK CIRCUITRY, UOI.
- PROVIDE REVISED TYPED PANELBOARD DIRECTORIES FOR ALL EXISTING TO REMAIN PANELS WHERE CIRCUITS ARE TO BE REMOVED.
- REMOVE ALL ASSOCIATED MOUNTING HARDWARE, BRACKETS, AND EQUIPMENT, UOI.

RECEPTACLES:
WHERE INDICATED TO BE DEMOLISHED:
- REMOVE ALL RECEPTACLES IMPACTED BY WALL MODIFICATIONS AND OVERALL PROJECT IMPROVEMENTS. **NOTE** ALL EXISTING RECEPTACLES MAY NOT BE SHOWN ON THESE DEMOLITION PLANS. MINOR FIELD VERIFICATION REQUIRED.
- REMOVE DEVICE, AND ALL ASSOCIATED WIRE & CONDUIT BACK TO SOURCE OR NEAREST ACTIVE JUNCTION BOX, UOI.

LIGHTING:
WHERE INDICATED TO BE DEMOLISHED:
- REMOVE ALL FIXTURES THROUGHOUT SPACE. **NOTE** ALL EXISTING LIGHTING FIXTURES MAY NOT BE SHOWN ON THESE DEMOLITION PLANS. MINOR FIELD VERIFICATION REQUIRED.
- REMOVE ALL ASSOCIATED WIRING BACK TO SOURCE, UOI.
- REMOVE SWITCHING AND CONTROL DEVICES, UOI.
- REMOVE CONTACTORS ASSOCIATED WITH LOW VOLTAGE SWITCHING DEVICES, UOI.
- DISPOSE OF ALL LAMPS IN ACCORDANCE WITH STATE/FEDERAL AND EPA REQUIREMENTS.

PANELBOARD REMOVAL AND REPLACEMENT:
- REFER TO SINGLE LINE DIAGRAMS FOR SCOPE OF WORK.

CIRCUIT AND FEEDER REMOVAL AND REPLACEMENT:
- MAINTAIN ANY EXISTING NON-IMPACTED PANELBOARDS AND ANY NON-IMPACTED CIRCUITS WHICH ARE EXISTING TO REMAIN.
- WHERE CIRCUITS ARE AFFECTED BY MODIFICATION/REMOVAL ACTIVITIES, PROVIDE NECESSARY CIRCUIT EXTENSIONS AND ALL NECESSARY LABOR/MATERIALS AS NECESSARY TO REPAIR AND RE-CONNECT CIRCUIT(S).
- ANY CIRCUITS/FEEDERS WHICH REQUIRE SHUTDOWN TO ACCOMMODATE WORK SHALL BE COORDINATED WITH THE OWNER WELL IN ADVANCE.

BUILDING/STRUCTURE GROUND SYSTEM:
- CONTRACTOR TO CAREFULLY PROTECT AND MAINTAIN ALL GROUND SYSTEMS ASSOCIATED WITH BUILDINGS/STRUCTURES EXISTING TO REMAIN.
- CONTRACTOR TO REMOVE ALL GROUND SYSTEMS ASSOCIATED WITH BUILDING/STRUCTURES TO BE REMOVED.
- GROUND SYSTEM COMPONENTS MAY INCLUDE, BUT ARE NOT LIMITED TO, GROUNDING CONDUCTORS, JUMPERS, TERMINATIONS, RODS, AND AIR TERMINALS. CONTRACTOR TO FIELD VERIFY EXISTING CONDITIONS PRIOR TO COMMENCEMENT OF DEMOLITION.

HAZARDOUS MATERIAL REMOVAL:
PERFORM WORK FOR REMOVAL AND DISPOSAL OF EQUIPMENT AND MATERIALS CONTAINING TOXIC SUBSTANCES REGULATED UNDER THE FEDERAL TOXIC SUBSTANCES CONTROL ACT (TSCA) IN ACCORDANCE WITH APPLICABLE FEDERAL, STATE, AND LOCAL REGULATIONS. APPLICABLE EQUIPMENT AND MATERIALS INCLUDE, BUT ARE NOT LIMITED TO:
- PCB-CONTAINING ELECTRICAL EQUIPMENT, INCLUDING TRANSFORMERS, CAPACITORS, AND SWITCHES.
- PCB- AND DEHP-CONTAINING LIGHTING BALLASTS.
- MERCURY-CONTAINING LAMPS AND TUBES, INCLUDING FLUORESCENT LAMPS, HIGH INTENSITY DISCHARGE (HID), ARC LAMPS, ULTRA-VIOLET, HIGH PRESSURE SODIUM, MERCURY VAPOR, IGNITRON TUBES, NEON, AND INCANDESCENT.
- CONTRACTOR TO COORDINATE ANY REQUIRED HAZARDOUS MATERIAL REMOVAL WITH THE OWNER, ENGINEER, AND APPLICABLE TRADE CONTRACTOR.

GENERAL SHEET NOTES:

1. REFER TO E-001 FOR ELECTRICAL LEGENDS, ABBREVIATIONS, AND GENERAL PROJECT NOTES.
2. ITEMS INDICATED TO BE REMOVED:
   - 2.1. REMOVE ALL CONDUCTORS AND EXPOSED CONDUIT BACK TO SOURCE (UOI).
   - 2.2. REMOVE CIRCUIT WIRING AND CIRCUIT BREAKER FROM SOURCE PANEL (UOI).
   - 2.3. REMOVE ALL ASSOCIATED CONTROL CONDUCTORS, CONDUITS, AND DEVICES (UOI).
   - 2.4. REMOVE ASSOCIATED STARTERS, DISCONNECTS, AND ASSOCIATED CIRCUITRY (UOI).
   - 2.5. REMOVE EQUIPMENT PADS & MOUNTING HARDWARE, BRACKETS, ACCESSORIES, ETC... (UOI).
   - 2.6. REVISE PANELBOARD AND MOTOR CONTROL CENTER DIRECTORIES/NAME PLATES AS CHANGES OCCUR (UOI).
3. THESE DEMOLITION DRAWINGS ARE SCHEMATIC IN NATURE AND ARE BASED ON CURSORY FIELD OBSERVATION AND EXISTING DRAWINGS. IT IS NOT THE INTENTION OF THESE DRAWINGS TO INDICATE EVERY DEVICE/FIXTURE REQUIRING REMOVAL/DEMO RATHER GENERAL SYSTEMS WHICH ARE TO BE REMOVED.
4. CIRCUITS NOT IN AREA OF WORK THAT ARE AFFECTED BY WORK SHALL BE OPERATIONAL DURING PROJECT. PROVIDE TEMPORARY CIRCUITS AS NECESSARY.
5. CIRCUIT, EQUIPMENT, AND DEVICE REMOVAL SHALL NOT AFFECT THE INTEGRITY OR FUNCTIONALITY OF CIRCUITS TO REMAIN. ALL CIRCUITS TO REMAIN SHALL BE MAINTAINED. PROVIDE ALL NECESSARY CIRCUIT MODIFICATIONS AND EXTENSIONS.
6. WHERE REMOVALS LEAVE HOLES AND DAMAGED SURFACES EXPOSED IN THE FINISHED WORK, PATCH AND REPAIR THESE HOLES AND DAMAGED SURFACES TO MATCH ADJACENT FINISHED SURFACES. WHERE NEW WORK IS TO BE APPLIED TO EXISTING SURFACES, PERFORM REMOVALS, AND PATCHING IN A MANNER TO PRODUCE SURFACES SUITABLE FOR RECEIVING NEW WORK. COORDINATE ALL WORK WITH OWNER, ENGINEER, AND APPLICABLE TRADE CONTRACTOR.
7. COORDINATE WITH ALL CONTRACT DRAWINGS AND TRADE CONTRACTORS FOR ADDITIONAL EQUIPMENT THAT IS TO BE DEMOLISHED. FOR ALL EQUIPMENT SHOWN/INDICATED FOR REMOVAL, DISCONNECT AND REMOVE ELECTRICAL CIRCUIT INCLUDING CONDUCTORS AND CONDUIT BACK TO SOURCE.
8. NOT ALL EQUIPMENT/DEVICES ARE SHOWN FOR CLARITY. CONTRACTOR SHALL FIELD VERIFY ALL EXISTING CONDITIONS AND REPORT DISCREPANCIES TO ENGINEER PRIOR TO COMMENCEMENT OF DEMOLITION.
9. REFER TO THE ELECTRICAL SINGLE LINE DIAGRAMS, SPECIFICATIONS, SCHEDULES & DETAILS FOR ADDITIONAL DEMOLITION INFORMATION/REQUIREMENTS.
10. COORDINATE ALL ASPECTS OF SEQUENCE OF REMOVAL WITH THE OWNER, ENGINEER, AND APPLICABLE CONTRACTOR. REFER TO SPECIFICATIONS AND DEMOLITION SINGLE LINE DIAGRAM FOR ADDITIONAL INFORMATION.
11. WHERE REMOVAL OF CONDUIT SYSTEM IS NOT FEASIBLE, REMOVE ALL CONDUCTORS FROM CONDUIT SYSTEM, CUT FLUSH, CAP CONDUIT SYSTEM, AND ABANDON IN PLACE. FEASIBLE IS DEFINED AS BEING LOCATED WITHIN A CONCRETE DUCT BANK OR CONCRETE SLAB. ALL OTHER INSTANCES TO HAVE THE CONDUIT & CIRCUITRY TO BE REMOVED IN THERE ENTIRETY. FIELD VERIFY AND COORDINATE FINAL REQUIREMENTS WITH THE OWNER AND ENGINEER, TYPICAL.

SHEET KEY NOTES:

1. CONTRACTOR TO PROVIDE COMPLETE ELECTRICAL DEMOLITION FOR THIS AREA (UNLESS OTHERWISE INDICATED). REMOVE THE FOLLOWING DEVICES INCLUDING BUT NOT LIMITED TO: ALL ELECTRICAL DISTRIBUTION EQUIPMENT, CONTROLLERS, CONTROL PANELS, DISCONNECTS, MOTOR STARTERS, RECEPTACLES, INTERIOR/EXTERIOR LIGHTING, JUNCTION BOXES, BONDING/GROUNDING EQUIPMENT, ELECTRIC VALVES, MOTORS (DISCONNECT & REMOVE BRANCH CIRCUITRY), AND INSTRUMENTATION/CONTROLS. REMOVE ALL ASSOCIATED CIRCUITRY (CONDUIT & CONDUCTORS) BACK TO SOURCE. COORDINATE REMOVAL EFFORTS CLOSELY WITH OWNER, ENGINEER, AND APPLICABLE TRADE CONTRACTOR.
2. CONTRACTOR TO CLOSELY COORDINATE THE REMOVAL EFFORTS OF ALL PLANT PROCESS EQUIPMENT/DEVICES SCHEDULED FOR REMOVAL WITH OWNER, ENGINEER, AND APPLICABLE TRADE CONTRACTOR.
3. NOTE: CONTRACTOR TO ENSURE ALL ELECTRICAL BRANCH CIRCUITS AND CONDUITS ARE REMOVED IN THIS AREA ASSOCIATED WITH EQUIPMENT SCHEDULED FOR REMOVAL, TO AVOID CONFLICT WITH PROPOSED EQUIPMENT, AND PIPING SYSTEMS. COORDINATE ALL EFFORTS CLOSELY WITH OWNER, ENGINEER, AND APPLICABLE TRADE CONTRACTOR.

TYPICAL OF TWO (2):
THICKENING TANK #1 AND
THICKENING TANK #2

MHE ENGINEERING
33 Airport Center Drive, Suite 202
New Windsor, NY 12553
(845) 587-3100
111 Wheatfield Drive, Suite 1
Milford, PA 18337
(570) 296-2765

BID ADDENDUM

JADE STONE ENGINEERING

STATE OF NEW YORK
JEFFREY E. ROBINSON
095896
LICENSED PROFESSIONAL ENGINEER

HAZARDOUS MATERIAL NOTE:
THE SERVICES PROVIDED BY MHE, INCLUDING ALL WORK DEPICTED ON MHE PLANS, DO NOT INCLUDE SERVICES RELATED TO THE IDENTIFICATION, CONTROLS OR HANDLING OF HAZARDOUS MATERIALS, INCLUDING SUCH MATERIALS AS ASBESTOS AND LEAD PAINT. ALL TESTING, IDENTIFICATION, ABATEMENT, CONTROLS, AND HANDLING OF HAZARDOUS MATERIALS SHALL BE UNDERTAKEN BY A HAZARDOUS MATERIAL CONSULTANT AND CERTIFIED PROFESSIONALS. IF SUCH MATERIALS HAVE BEEN IDENTIFIED, CONTRACTOR WILL COMMUNICATE DIRECTLY WITH HAZARDOUS MATERIAL PROFESSIONAL FOR THE PERFORMANCE OF ANY WORK ON OR ADJACENT TO SAID MATERIALS. IF UNIDENTIFIED MATERIALS OF CONCERN ARE ENCOUNTERED WHILE UNDERTAKING THE WORK SHOWN HEREON, CONTRACTOR SHALL IMMEDIATELY NOTIFY ENGINEER AND OWNER, AND SHALL OBTAIN DIRECTION FROM THE HAZARDOUS MATERIAL CONSULTANT PRIOR TO THE CONTINUATION OF WORK INVOLVING SUSPECTED MATERIAL.

UDIG·NY
SAFE DIGGING STARTS HERE
CALL 811

UNAUTHORIZED ADDITION OR ALTERATION OF THIS PLAN IS A VIOLATION OF SECTION 7209(2) OF THE NEW YORK STATE EDUCATION LAW.

ALL PRODUCTION & INTELLECTUAL PROPERTY RIGHT RESERVED ©

CAESARS LANE WWTP EXPANSION PROJECT: PHASE 2
145 CAESARS LN.
NEW WINDSOR, NY 12553
FOR TOWN OF NEW WINDSOR
555 UNION AVE.
NEW WINDSOR, NY 12553

ELECTRICAL DEMOLITION PLANS - THICKENING TANKS

REVISIONS

NO.	DESCRIPTION	DATE

ISSUED DATE:	06 JUNE, 2025
DESIGN BY:	RRM
DRAWN BY:	CDJ
CHECKED BY:	MGR
REVIEWED BY:	JER

SHEET NO.
E-803

PROJECT # 18-732 PHASE #

GENERAL NEW WORK NOTES:

1. REFER TO E-001 FOR ELECTRICAL LEGENDS, ABBREVIATIONS AND GENERAL PROJECT NOTES.
2. PROVIDE A DEDICATED GROUNDING CONDUCTOR FOR ALL ELECTRICAL EQUIPMENT AND ASSOCIATED EQUIPMENT/DEVICES.
3. EQUIPMENT & DEVICE LOCATIONS ARE SHOWN AS GENERAL IN NATURE. REFER TO ALL TRADE CONTRACT DRAWINGS AND COORDINATE WITH ALL TRADE CONTRACTORS, OWNER, AND ENGINEER FOR EXACT LOCATIONS. CLOSE CONTRACTOR COORDINATION REQUIRED.
4. ALL PROPOSED EQUIPMENT LOCATIONS/INSTALLATIONS TO COMPLY WITH NEC ARTICLE 110.26 'SPACES ABOUT ELECTRICAL EQUIPMENT'. CONTRACTOR TO COORDINATE INSTALLATION LOCATIONS OF ALL EQUIPMENT WITH APPLICABLE TRADE CONTRACTOR, OWNER, AND ENGINEER PRIOR TO ROUGH-IN.
5. CONTRATOR TO PROVIDE ALL REQUIRED MOUNTING HARDWARE, EQUIPMENT, BRACKETS, SUPPORTS, ACCESSORIES, ETC... PROVIDE AS STAINLESS STEEL IN CORROSIVE ENVIRONMENTS, EXTERIOR APPLICATIONS, OR WHERE INDICATED ON THE CONTRACT DRAWINGS.
6. REFER TO ELECTRICAL SINGLE LINE DIAGRAMS, SPECIFICATIONS, SCHEDULES, AND DETAILS FOR ADDITIONAL INFORMATION/REQUIREMENTS.
7. CONTRACTOR TO COORDINATE ALL ASPECTS OF SEQUENCE OF CONSTRUCTION WITH OWNER, ENGINEER, AND ALL TRADE CONTRACTORS.
8. CONTRACTOR TO PROVIDE LABEL FOR ALL PROPOSED ELECTRICAL EQUIPMENT AND DEVICES. COORDINATE FINAL LABELING REQUIREMENTS WITH THE OWNER. REFER TO SPECIFICATION SECTION 26 0553 - IDENTIFICATION FOR ELECTRICAL SYSTEMS FOR ADDITIONAL INFORMATION/REQUIREMENTS.
9. CONTRACTOR TO COORDINATE ALL CONDUIT PENETRATIONS AND ROUTING WITH ALL TRADE CONTRACTORS, OWNER, AND ENGINEER PRIOR TO ROUGH-IN TO AVOID CONFLICTS.
10. NOT ALL EQUIPMENT/DEVICES MAY BE SHOWN FOR CLARITY. CONTRACTOR SHALL FIELD VERIFY ALL EXISTING AND PROPOSED CONDITIONS PRIOR TO COMMENCEMENT OF CONSTRUCTION. COORDINATE WITH ALL TRADE CONTRACTORS, OWNER, AND ENGINEER.

SHEET KEY NOTES:

1. CONTRACTOR TO PROVIDE CONCRETE HOUSEKEEPING PAD BENEATH EQUIPMENT. REFER TO TYPICAL EQUIPMENT PAD DETAIL FOR REQUIREMENTS.

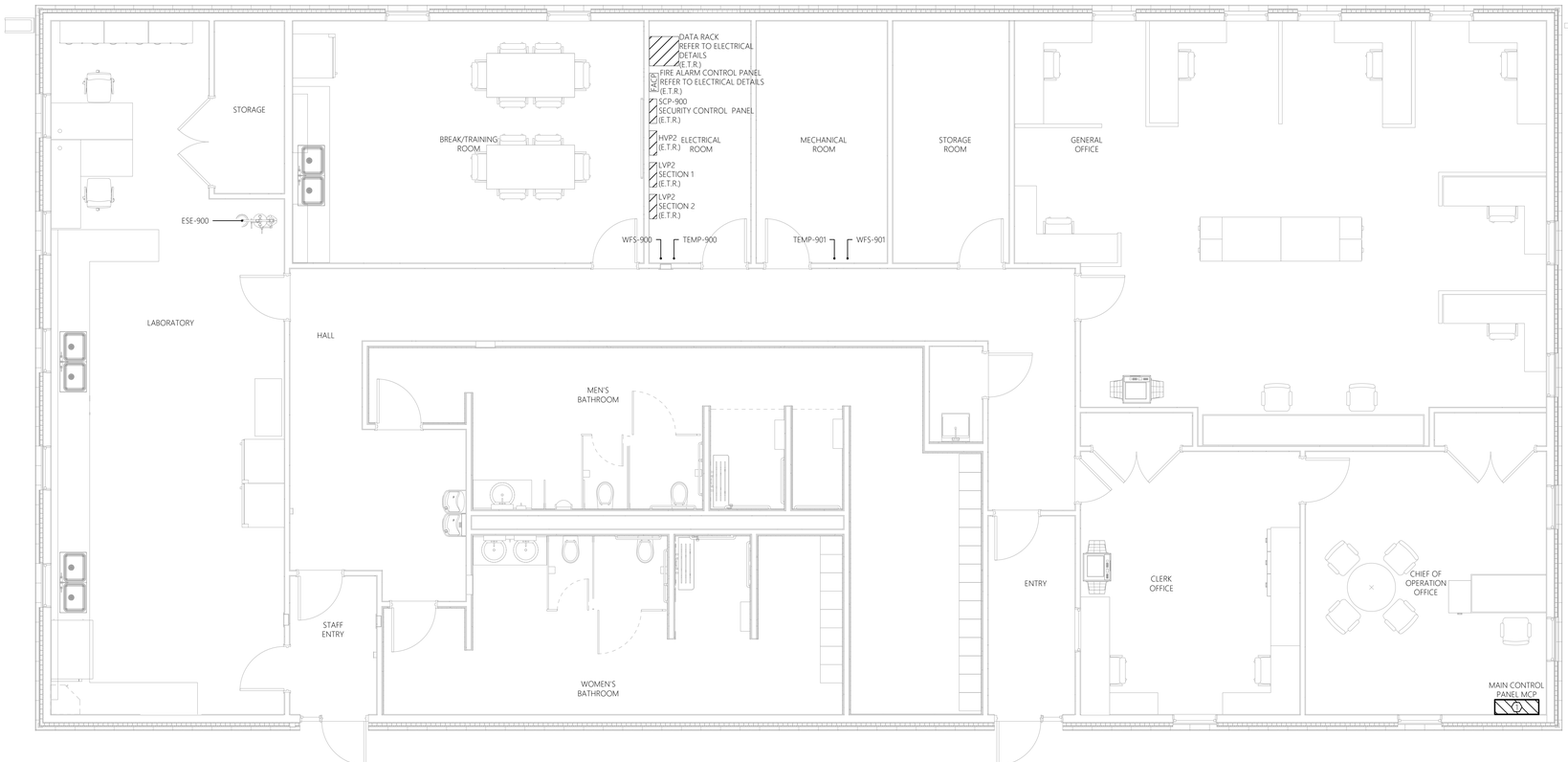

0' 2' 4' 8'
SCALE: 1/4" = 1'-0"

1 ELECTRICAL POWER & SYSTEMS PLAN
E-900 SCALE: 1/4" = 1'-0" CONTROL BUILDING

MHE ENGINEERING
33 Airport Center Drive, Suite 202
New Windsor, NY 12553
(845) 567-3100
111 Wheatfield Drive, Suite 1
Milford, PA 18337
(570) 296-2765

BID ADDENDUM

JADE STONE ENGINEERING

STATE OF NEW YORK · JEFFREY E. ROBINSON · 095896 · LICENSED PROFESSIONAL ENGINEER

HAZARDOUS MATERIAL NOTE:

THE SERVICES PROVIDED BY MHE, INCLUDING ALL WORK DEPICTED ON MHE PLANS, DO NOT INCLUDE SERVICES RELATED TO THE IDENTIFICATION, CONTROLS OR HANDLING OF HAZARDOUS MATERIALS, INCLUDING SUCH MATERIALS AS ASBESTOS AND LEAD PAINT. ALL TESTING, IDENTIFICATION, ABATEMENT, CONTROLS, AND HANDLING OF HAZARDOUS MATERIALS SHALL BE UNDERTAKEN BY A HAZARDOUS MATERIAL CONSULTANT AND CERTIFIED PROFESSIONALS. IF SUCH MATERIALS HAVE BEEN IDENTIFIED, CONTRACTOR WILL COMMUNICATE DIRECTLY WITH HAZARDOUS MATERIAL PROFESSIONAL FOR THE PERFORMANCE OF ANY WORK ON OR ADJACENT TO SAID MATERIALS. IF UNIDENTIFIED MATERIALS OF CONCERN ARE ENCOUNTERED WHILE UNDERTAKING THE WORK SHOWN HEREON, CONTRACTOR SHALL IMMEDIATELY NOTIFY ENGINEER AND OWNER, AND SHALL OBTAIN DIRECTION FROM THE HAZARDOUS MATERIAL CONSULTANT PRIOR TO THE CONTINUATION OF WORK INVOLVING SUSPECTED MATERIAL.

UDIG·NY SAFE DIGGING STARTS HERE
CALL 811

UNAUTHORIZED ADDITION OR ALTERATION OF THIS PLAN IS A VIOLATION OF SECTION 7209(2) OF THE NEW YORK STATE EDUCATION LAW.

ALL PRODUCTION & INTELLECTUAL PROPERTY RIGHT RESERVED ©

CAESARS LANE WWTP EXPANSION PROJECT: PHASE 2
145 CAESARS LN.
NEW WINDSOR, NY 12553
FOR TOWN OF NEW WINDSOR
555 UNION AVE.
NEW WINDSOR, NY 12553

ELECTRICAL POWER & SYSTEMS PLAN - CONTROL BUILDING

REVISIONS

NO.	DESCRIPTION	DATE

ISSUED DATE:	06 JUNE, 2025
DESIGN BY:	RRM
DRAWN BY:	CDJ
CHECKED BY:	MGR
REVIEWED BY:	JER

SHEET NO.

E-900

PROJECT # 18-732 PHASE #

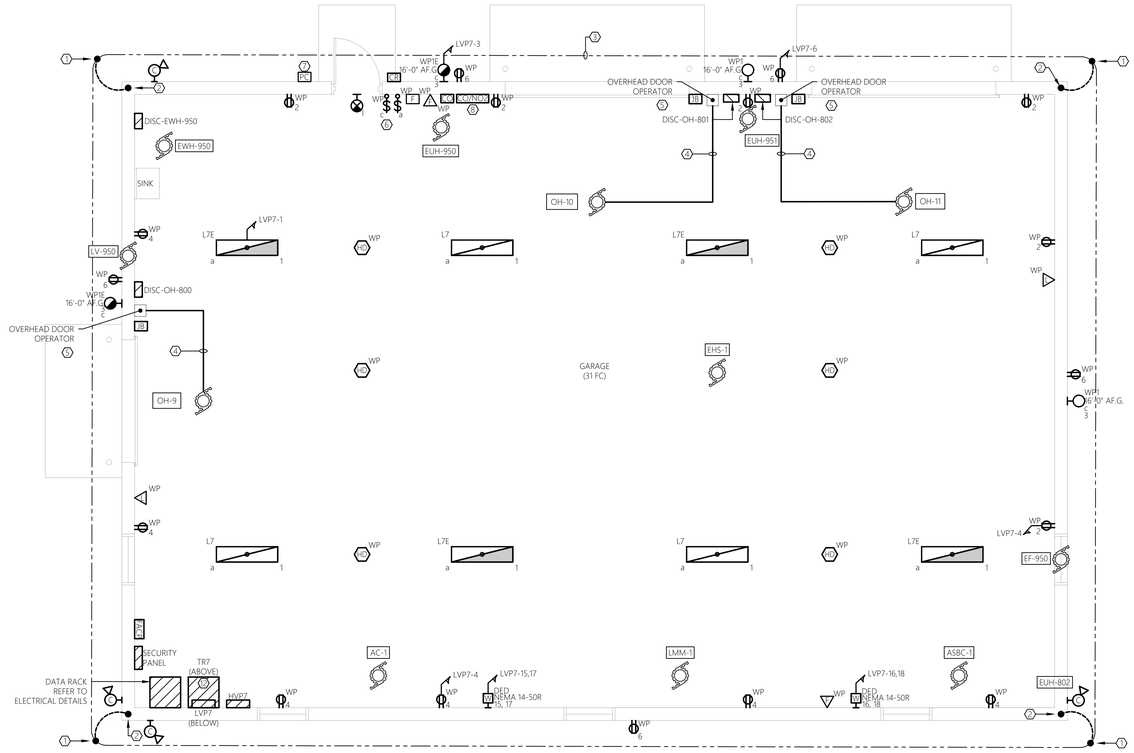

1 E-950 ELECTRICAL POWER, SYSTEMS, & LIGHTING PLAN

SCALE: 1/4" = 1'-0"

GARAGE

GENERAL NEW WORK NOTES:

1. REFER TO E-001 FOR ELECTRICAL LEGENDS, ABBREVIATIONS AND GENERAL PROJECT NOTES.
2. PROVIDE A DEDICATED GROUNDING CONDUCTOR FOR ALL ELECTRICAL EQUIPMENT AND ASSOCIATED EQUIPMENT/DEVICES.
3. EQUIPMENT & DEVICE LOCATIONS ARE SHOWN AS GENERAL IN NATURE. REFER TO ALL TRADE CONTRACT DRAWINGS AND COORDINATE WITH ALL TRADE CONTRACTORS, OWNER, AND ENGINEER FOR EXACT LOCATIONS. CLOSE CONTRACTOR COORDINATION REQUIRED.
4. ALL PROPOSED EQUIPMENT LOCATIONS/INSTALLATIONS TO COMPLY WITH NEC ARTICLE 110.26 'SPACES ABOUT ELECTRICAL EQUIPMENT'. CONTRACTOR TO COORDINATE INSTALLATION LOCATIONS OF ALL EQUIPMENT WITH APPLICABLE TRADE CONTRACTOR, OWNER, AND ENGINEER PRIOR TO ROUGH-IN.
5. CONTRATOR TO PROVIDE ALL REQUIRED MOUNTING HARDWARE, EQUIPMENT, BRACKETS, SUPPORTS, ACCESSORIES, ETC... PROVIDE AS STAINLESS STEEL IN CORROSIVE ENVIRONMENTS, EXTERIOR APPLICATIONS, OR WHERE INDICATED ON THE CONTRACT DRAWINGS.
6. REFER TO ELECTRICAL SINGLE LINE DIAGRAMS, SPECIFICATIONS, SCHEDULES, AND DETAILS FOR ADDITIONAL INFORMATION/REQUIREMENTS.
7. CONTRACTOR TO COORDINATE ALL ASPECTS OF SEQUENCE OF CONSTRUCTION WITH OWNER, ENGINEER, AND ALL TRADE CONTRACTORS.
8. ALL WEATHERPROOF RECEPTACLES TO BE INSTALLED AT A HEIGHT OF 36" A.F.G.
9. CONTRACTOR TO PROVIDE LABEL FOR ALL PROPOSED ELECTRICAL EQUIPMENT AND DEVICES. COORDINATE FINAL LABELING REQUIREMENTS WITH THE OWNER. REFER TO SPECIFICATION SECTION 26 0553 - IDENTIFICATION FOR ELECTRICAL SYSTEMS FOR ADDITIONAL INFORMATION/REQUIREMENTS.
10. CONTRACTOR TO COORDINATE ALL CONDUIT PENETRATIONS AND ROUTING WITH ALL TRADE CONTRACTORS, OWNER, AND ENGINEER PRIOR TO ROUGH-IN TO AVOID CONFLICTS.
11. NOT ALL EQUIPMENT/DEVICES MAY BE SHOWN FOR CLARITY. CONTRACTOR SHALL FIELD VERIFY ALL EXISTING AND PROPOSED CONDITIONS PRIOR TO COMMENCEMENT OF CONSTRUCTION. COORDINATE WITH ALL TRADE CONTRACTORS, OWNER, AND ENGINEER.
12. CONTRACTOR TO ADJUST FINAL INTERIOR LIGHT FIXTURE LOCATIONS TO AVOID CONFLICTS WITH EQUIPMENT, PIPING SYSTEMS, AND DUCT WORK. COORDINATE WITH ALL TRADE CONTRACTORS, OWNER, AND ENGINEER PRIOR TO ROUGH-IN.
13. CONTRACTOR TO ADJUST FINAL AIMING ANGLE OF EXTERIOR LIGHT FIXTURES TO LIGHT DESIRED AREAS AND MINIMIZE LIGHT POLLUTION. COORDINATE WITH ALL TRADE CONTRACTORS, OWNER, AND ENGINEER.

SHEET KEY NOTES:

1. CONTRACTOR TO PROVIDE 3/4"Ø x 10' COPPER GROUND ROD. BOND ALL METAL STRUCTURES AND LIGHTING PROTECTION DOWN CONDUCTOR TO GROUND ROD USING #2 COPPER CONDUCTOR WITHIN PVC CONDUIT. REFER TO TYPICAL LIGHTNING PROTECTION GROUNDING DETAIL AND TYPICAL PANEL GROUNDING DETAIL FOR ADDITIONAL INFORMATION/REQUIREMENTS.
2. LIGHTNING PROTECTION DOWN CONDUCTOR. CONCEAL IN PVC CONDUIT WITHIN EXTERIOR WALL CONSTRUCTION. CONTRACTOR TO WORK WITH CERTIFIED LIGHTNING PROTECTION INSTALLER TO PROVIDE COMPLETE BUILDING LIGHTNING PROTECTION SYSTEM IN ACCORDANCE WITH NFPA. UPON COMPLETION PROVIDE UL MASTER LABEL.
3. GROUND RING. GROUND RING TO BE BURIED AT MINIMUM 3 FEET BELOW FINISHED GRADE. GROUND RING TO BE KEPT AT MINIMUM OF 3 FEET AWAY FROM BUILDING AT ALL TIMES. PROVIDE AND INSTALL 3/4"Ø x 10' GROUND RODS AT EACH CORNER OF GROUND RING FOR A TOTAL OF FOUR (4) GROUND RODS. ALL GROUND CONDUCTORS SHALL BE #2 COPPER, U.O.N.
4. PROVIDE LOW VOLTAGE CONDUCTORS IN 3/4" RGS CONDUIT PER MANUFACTURERS RECOMMENDATIONS FOR AN OVERALL COMPLETE AND OPERABLE SYSTEM. COORDINATE FINAL REQUIREMENTS WITH APPLICABLE TRADE CONTRACTOR, OWNER, AND ENGINEER.
5. REFER TO EQUIPMENT CONNECTION SCHEDULE AND 'TYPICAL OVERHEAD DOOR RISER DIAGRAM' FOR ADDITIONAL INFORMATION/REQUIREMENTS.
6. CONTRACTOR TO PROVIDE WATTSTOPPER RT-200 ASTRONOMICAL TIME SWITCH, OR APPROVED EQUAL WITHIN NEMA 3R ENCLOSURE. SWITCH TO CONTROL THE PROPOSED EXTERIOR WALL MOUNTED LIGHT FIXTURES TYPES 'WP1' & 'WP1E'. PROGRAM TIME SWITCHES FOR LIGHTING 'ON' AT ASTRONOMICAL SUNSET AND 'OFF' AT ASTRONOMICAL SUNRISE. FINAL ON/OFF PROGRAMMING PARAMETERS TO BE COORDINATED WITH THE OWNER.
7. CONTRACTOR TO PROVIDE ONE (1) 120V, 20A PHOTO CONTROL WITH ADJUSTABLE SHIELD FOR CONTROL OF EXTERIOR LIGHTING CIRCUITS. INTERLOCK WITH ASTRONOMICAL TIME SWITCHES. CONFIRM FINAL LOCATIONS WITH THE OWNER PRIOR TO ROUGH-IN. INSTALL PER MANUFACTURER'S RECOMMENDATIONS.
8. CO/NO2 DETECTION SYSTEM (ARMSTRONG AMC-1BVC OR EQUAL) TO BE INSTALLED AT LOCATION SHOWN. PROVIDE INTERLOCK BETWEEN GAS DETECTION SYSTEM AND EXHAUST FAN. EF-950 SHALL BE CONTROLLED THRU CO/NO2 DETECTION SYSTEM WITH TWO POSITION SELECTOR SWITCH (ON/AUTO); ON SHALL ENABLE EXHAUST FAN. AUTO SHALL BE INTERLOCKED WITH GAS DETECTION SYSTEM.

MHE ENGINEERING
33 Airport Center Drive, Suite 202
New Windsor, NY 12553
(845) 587-3100
111 Wheatfield Drive, Suite 1
Milford, PA 18337
(570) 296-2765

BID ADDENDUM

JADE STONE ENGINEERING

STATE OF NEW YORK · JEFFREY E. ROBINSON · 095896 · LICENSED PROFESSIONAL ENGINEER

HAZARDOUS MATERIAL NOTE:
THE SERVICES PROVIDED BY MHE, INCLUDING ALL WORK DEPICTED ON MHE PLANS, DO NOT INCLUDE SERVICES RELATED TO THE IDENTIFICATION, CONTROLS OR HANDLING OF HAZARDOUS MATERIALS, INCLUDING SUCH MATERIALS AS ASBESTOS AND LEAD PAINT. ALL TESTING, IDENTIFICATION, ABATEMENT, CONTROLS, AND HANDLING OF HAZARDOUS MATERIALS SHALL BE UNDERTAKEN BY A HAZARDOUS MATERIAL CONSULTANT AND CERTIFIED PROFESSIONALS. IF SUCH MATERIALS HAVE BEEN IDENTIFIED, CONTRACTOR WILL COMMUNICATE DIRECTLY WITH HAZARDOUS MATERIAL PROFESSIONAL FOR THE PERFORMANCE OF ANY WORK ON OR ADJACENT TO SAID MATERIALS. IF UNIDENTIFIED MATERIALS OF CONCERN ARE ENCOUNTERED WHILE UNDERTAKING THE WORK SHOWN HEREON, CONTRACTOR SHALL IMMEDIATELY NOTIFY ENGINEER AND OWNER, AND SHALL OBTAIN DIRECTION FROM THE HAZARDOUS MATERIAL CONSULTANT PRIOR TO THE CONTINUATION OF WORK INVOLVING SUSPECTED MATERIAL.

UDIG·NY SAFE DIGGING STARTS HERE
CALL 811

UNAUTHORIZED ADDITION OR ALTERATION OF THIS PLAN IS A VIOLATION OF SECTION 7209(2) OF THE NEW YORK STATE EDUCATION LAW.

ALL PRODUCTION & INTELLECTUAL PROPERTY RIGHT RESERVED ©

CAESARS LANE WWTP EXPANSION PROJECT: PHASE 2
145 CAESARS LN.
NEW WINDSOR, NY 12553
FOR TOWN OF NEW WINDSOR
555 UNION AVE.
NEW WINDSOR, NY 12553

ELECTRICAL POWER, SYSTEMS, & LIGHTING PLAN - GARAGE

REVISIONS

NO.	DESCRIPTION	DATE

ISSUED DATE:	06 JUNE, 2025
DESIGN BY:	RRM
DRAWN BY:	CDJ
CHECKED BY:	MGR
REVIEWED BY:	JER

SHEET NO.

E-950

PROJECT # 18-732 PHASE #

SCALE: 1/4" = 1'-0"

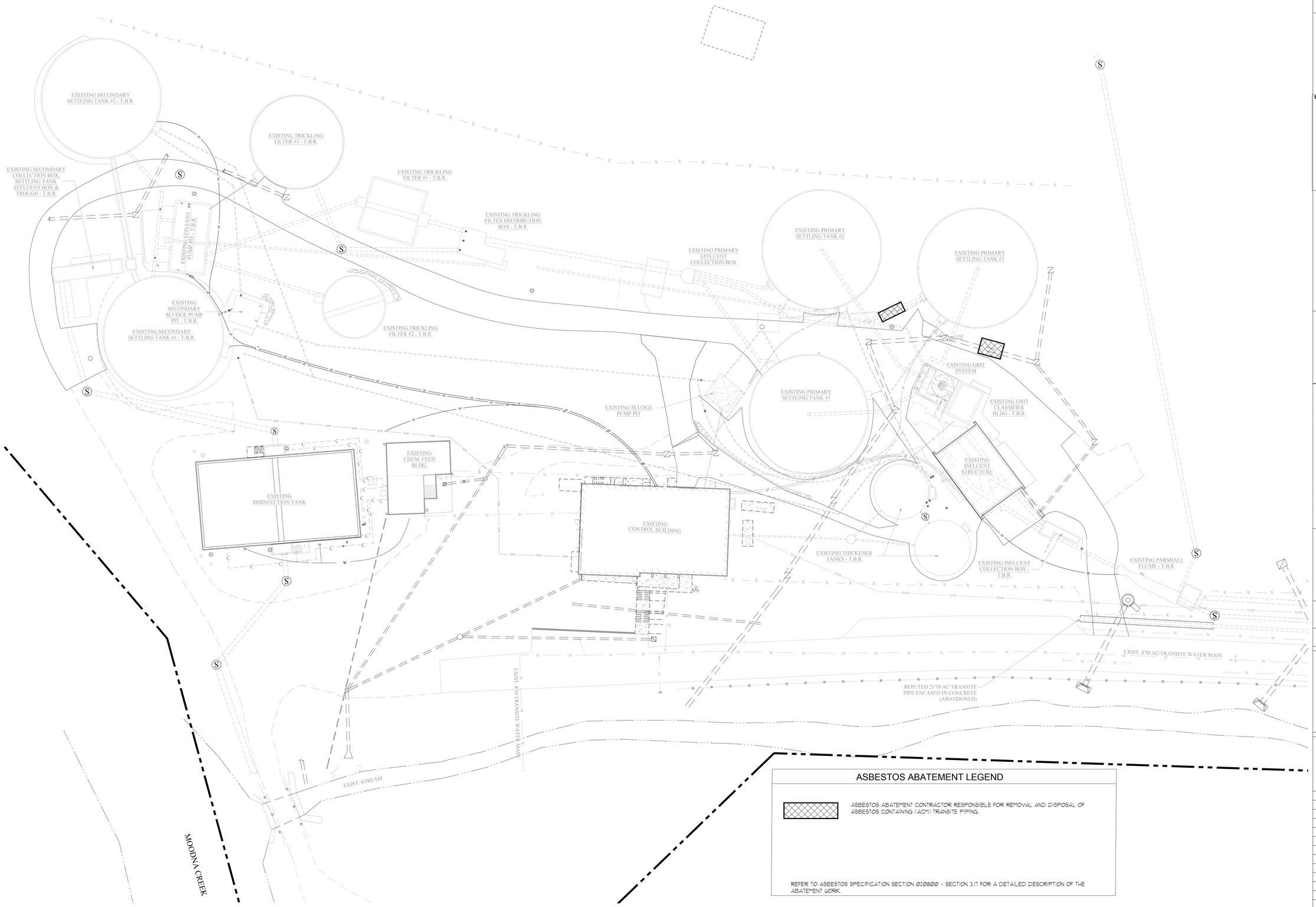

ASBESTOS ABATEMENT LEGEND

ASBESTOS ABATEMENT CONTRACTOR RESPONSIBLE FOR REMOVAL AND DISPOSAL OF ASBESTOS CONTAINING (ACM) TRANSITE PIPING.

REFER TO ASBESTOS SPECIFICATION SECTION 010800 - SECTION 3.11 FOR A DETAILED DESCRIPTION OF THE ABATEMENT WORK.

NOTE : PIPING NOTED TO BE REMOVED MAY BE ABANDONED IN-PLACE WHERE IT DOES NOT REQUIRE REMOVAL FOR INSTALLATION OF NEW PIPING OR STRUCTURES.

1 / AA100 EXISTING CONDITIONS - ASBESTOS ABATEMENT PLAN

SCALE: 1" = 20'

GRAPHIC SCALE

10 0 10 20 40 80

1 inch = 20 feet

BID SET

Environmental Consultant

QuES&T
Quality Environmental Solutions & Technologies, Inc.
1376 Route 9 Wappingers Falls, New York 12509
845. 298. 6031
www.qualityenv.com

HAZARDOUS MATERIAL NOTE:

THE SERVICES PROVIDED BY MHE, INCLUDING ALL WORK DEPICTED ON MHE PLANS, DO NOT INCLUDE SERVICES RELATED TO THE IDENTIFICATION, CONTROLS OR HANDLING OF HAZARDOUS MATERIALS, INCLUDING SUCH MATERIALS AS ASBESTOS AND LEAD PAINT. ALL TESTING, IDENTIFICATION, ABATEMENT, CONTROLS, AND HANDLING OF HAZARDOUS MATERIALS SHALL BE UNDERTAKEN BY A HAZARDOUS MATERIAL CONSULTANT AND CERTIFIED PROFESSIONALS. IF SUCH MATERIALS HAVE BEEN IDENTIFIED, CONTRACTOR WILL COMMUNICATE DIRECTLY WITH HAZARDOUS MATERIAL PROFESSIONAL FOR THE PERFORMANCE OF ANY WORK ON OR ADJACENT TO SAID MATERIALS. IF UNIDENTIFIED MATERIALS OF CONCERN ARE ENCOUNTERED WHILE UNDERTAKING THE WORK SHOWN HEREON, CONTRACTOR SHALL IMMEDIATELY NOTIFY ENGINEER AND OWNER, AND SHALL OBTAIN DIRECTION FROM THE HAZARDOUS MATERIAL CONSULTANT PRIOR TO THE CONTINUATION OF WORK INVOLVING SUSPECTED MATERIAL.

UDIG·NY
SAFE DIGGING STARTS HERE
CALL 811

UNAUTHORIZED ADDITION OR ALTERATION OF THIS PLAN IS A VIOLATION OF SECTION 7209(2) OF THE NEW YORK STATE EDUCATION LAW.

ALL PRODUCTION & INTELLECTUAL PROPERTY RIGHT RESERVED ©

CAESARS LANE WWTP EXPANSION PROJECT: PHASE 2

145 CAESARS LN.
NEW WINDSOR, NY 12553

FOR TOWN OF NEW WINDSOR
555 UNION AVE.
NEW WINDSOR, NY 12553

ASBESTOS ABATEMENT PLAN

REVISIONS

NO.	DESCRIPTION	DATE

ISSUED DATE: 18 APR, 2025

DESIGN BY:

DRAWN BY:

CHECKED BY:

REVIEWED BY:

SHEET NO.

AA100

PROJECT # 18-732 PHASE #

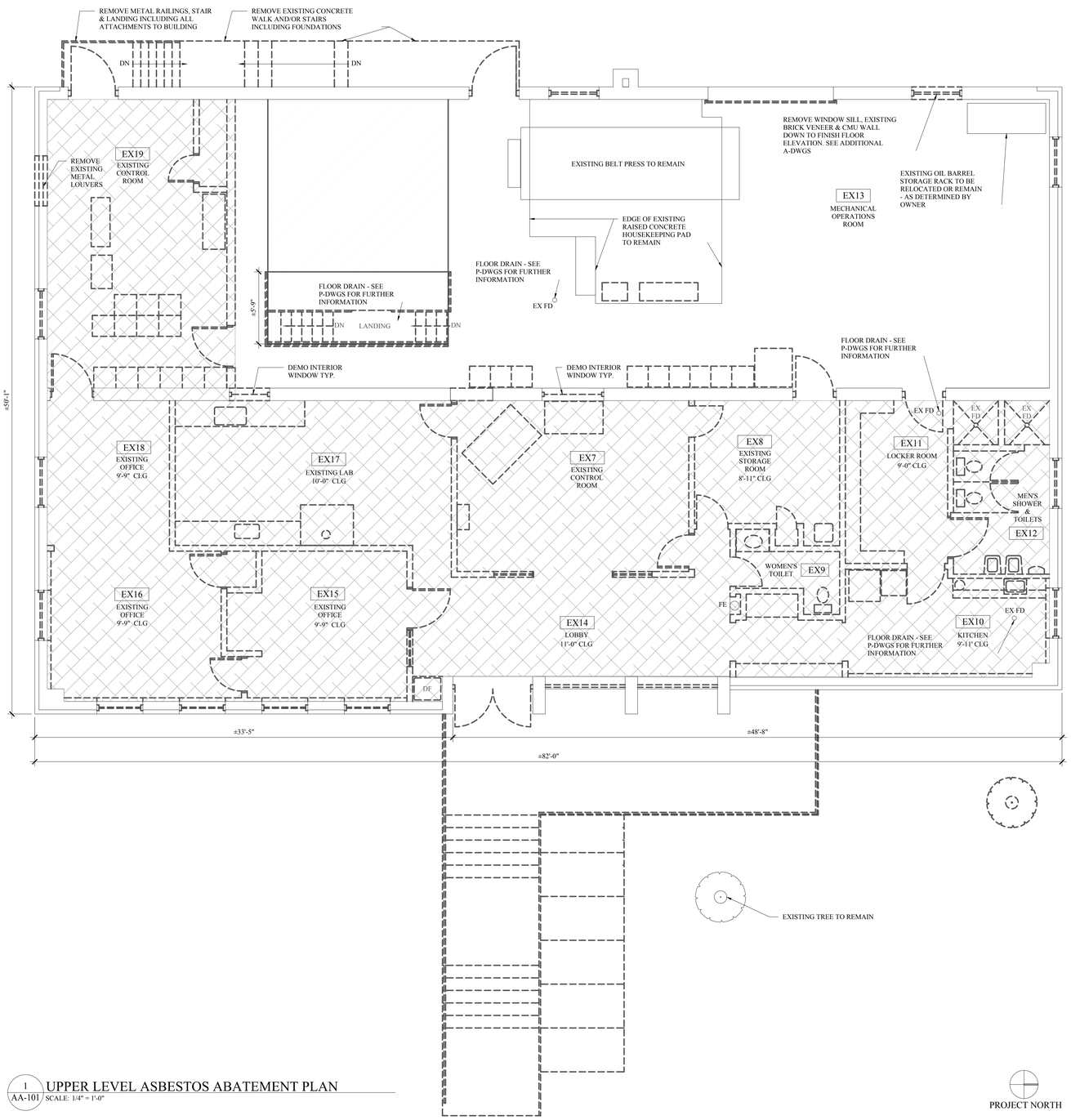

1 AA-101 UPPER LEVEL ASBESTOS ABATEMENT PLAN
SCALE: 1/4" = 1'-0"

ASBESTOS ABATEMENT LEGEND

ASBESTOS ABATEMENT CONTRACTOR RESPONSIBLE FOR REMOVAL AND DISPOSAL OF ASBESTOS CONTAINING (ACM) INTERIOR SHEETROCK WALLS, CEILINGS, SOFFITTS, WITH ACM JOINT COMPOUND.

REFER TO ASBESTOS SPECIFICATION SECTION 010800 - SECTION 3.11 FOR A DETAILED DESCRIPTION OF THE ABATEMENT WORK.

BID SET

Environmental Consultant

QuES&T
Quality Environmental Solutions & Technologies, Inc.
1376 Route 9 Wappingers Falls, New York 12509
845. 298. 6031
www.qualityenv.com

HAZARDOUS MATERIAL NOTE:
THE SERVICES PROVIDED BY MHE, INCLUDING ALL WORK DEPICTED ON MHE PLANS, DO NOT INCLUDE SERVICES RELATED TO THE IDENTIFICATION, CONTROLS OR HANDLING OF HAZARDOUS MATERIALS, INCLUDING SUCH MATERIALS AS ASBESTOS AND LEAD PAINT. ALL TESTING, IDENTIFICATION, ABATEMENT, CONTROLS, AND HANDLING OF HAZARDOUS MATERIALS SHALL BE UNDERTAKEN BY A HAZARDOUS MATERIAL CONSULTANT AND CERTIFIED PROFESSIONALS. IF SUCH MATERIALS HAVE BEEN IDENTIFIED, CONTRACTOR WILL COMMUNICATE DIRECTLY WITH HAZARDOUS MATERIAL PROFESSIONAL FOR THE PERFORMANCE OF ANY WORK ON OR ADJACENT TO SAID MATERIALS. IF UNIDENTIFIED MATERIALS OF CONCERN ARE ENCOUNTERED WHILE UNDERTAKING THE WORK SHOWN HEREON, CONTRACTOR SHALL IMMEDIATELY NOTIFY ENGINEER AND OWNER, AND SHALL OBTAIN DIRECTION FROM THE HAZARDOUS MATERIAL CONSULTANT PRIOR TO THE CONTINUATION OF WORK INVOLVING SUSPECTED MATERIAL.

UDIG·NY
SAFE DIGGING STARTS HERE
CALL 811

UNAUTHORIZED ADDITION OR ALTERATION OF THIS PLAN IS A VIOLATION OF SECTION 7209(2) OF THE NEW YORK STATE EDUCATION LAW.

ALL PRODUCTION & INTELLECTUAL PROPERTY RIGHT RESERVED ©

CAESARS LANE WWTP EXPANSION PROJECT: PHASE 2
145 CAESARS LN.
NEW WINDSOR, NY 12553
FOR TOWN OF NEW WINDSOR
555 UNION AVE.
NEW WINDSOR, NY 12553

DEWATERING BUILDING - UPPER LEVEL ASBESTOS ABATEMENT PLAN

REVISIONS

NO.	DESCRIPTION	DATE

ISSUED DATE:	18 APR. 2025
DESIGN BY:	QuEST RL
DRAWN BY:	QuEST AM
CHECKED BY:	QuEST RL
REVIEWED BY:	QuEST RL

SHEET NO.

AA-101

PROJECT # 18-732 PHASE #

ASBESTOS ABATEMENT LEGEND

ASBESTOS ABATEMENT CONTRACTOR RESPONSIBLE FOR REMOVAL AND DISPOSAL OF ASBESTOS CONTAINING (ACM) DOOR AND WINDOW SYSTEMS CAULK.

REFER TO ASBESTOS SPECIFICATION SECTION 010800 - SECTION 3.17 FOR A DETAILED DESCRIPTION OF THE ABATEMENT WORK.

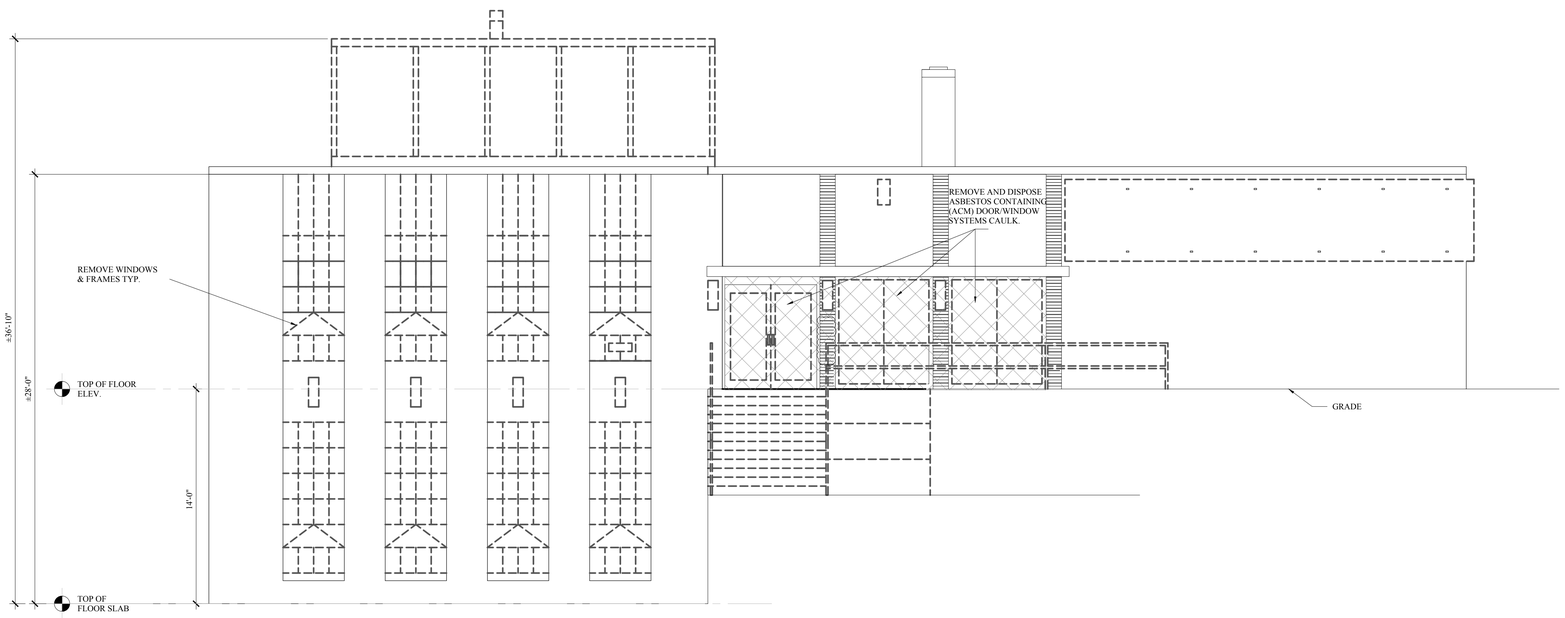

1 / AA-102 EAST ELEVATION ASBESTOS ABATEMENT
SCALE: 1/8" = 1'-0"

BID SET

Environmental Consultant

QuES&T
Quality Environmental Solutions & Technologies, Inc.
1376 Route 9 Wappingers Falls, New York 12509
845. 298. 6031
www.qualityenv.com

HAZARDOUS MATERIAL NOTE:

THE SERVICES PROVIDED BY MHE, INCLUDING ALL WORK DEPICTED ON MHE PLANS, DO NOT INCLUDE SERVICES RELATED TO THE IDENTIFICATION, CONTROLS OR HANDLING OF HAZARDOUS MATERIALS, INCLUDING SUCH MATERIALS AS ASBESTOS AND LEAD PAINT. ALL TESTING, IDENTIFICATION, ABATEMENT, CONTROLS, AND HANDLING OF HAZARDOUS MATERIALS SHALL BE UNDERTAKEN BY A HAZARDOUS MATERIAL CONSULTANT AND CERTIFIED PROFESSIONALS. IF SUCH MATERIALS HAVE BEEN IDENTIFIED, CONTRACTOR WILL COMMUNICATE DIRECTLY WITH HAZARDOUS MATERIAL PROFESSIONAL FOR THE PEROMMANCE OF ANY WORK ON OR ADJACENT TO SAID MATERIALS. IF UNIDENTIFIED MATERIALS OF CONCERN ARE ENCOUNTERED WHILE UNDERTAKING THE WORK SHOWN HEREON, CONTRACTOR SHALL IMMEDIATELY NOTIFY ENGINEER AND OWNER, AND SHALL OBTAIN DIRECTION FROM THE HAZARDOUS MATERIAL CONSULTANT PRIOR TO THE CONTINUATION OF WORK INVOLVING SUSPECTED MATERIAL.

UDIG·NY
SAFE DIGGING STARTS HERE
CALL 811

UNAUTHORIZED ADDITION OR ALTERATION OF THIS PLAN IS A VIOLATION OF SECTION 7209(2) OF THE NEW YORK STATE EDUCATION LAW.

ALL PRODUCTION & INTELLECTUAL PROPERTY RIGHT RESERVED ©

CAESARS LANE WWTP EXPANSION PROJECT: PHASE 2
145 CAESARS LN.
NEW WINDSOR, NY 12553

FOR TOWN OF NEW WINDSOR
555 UNION AVE.
NEW WINDSOR, NY 12553

DEWATERING BUILDING - EXTERIOR ELEVATIONS EAST - ASBESTOS ABATEMENT PLAN

REVISIONS

NO.	DESCRIPTION	DATE

ISSUED DATE:	18 APR. 2025
DESIGN BY:	QuEST. RL
DRAWN BY:	QuEST. AM
CHECKED BY:	QuEST. RL
REVIEWED BY:	QuEST. RL

SHEET NO.

AA-102

PROJECT # 18-732 PHASE #

SECTION 028200
ASBESTOS ABATEMENT

PART I – GENERAL

1.01 DESCRIPTION

A. All work under this contract shall be performed in strict accordance with the specifications and all applicable laws for asbestos removal projects. The Abatement Contractor shall furnish all labor, materials, supervision, services, insurance and equipment necessary for the complete and total removal of Asbestos-containing Materials (ACM) as described herein, in attachments to the specification, Job Specific Variance(s) and/or as directed by the ***Town of New Windsor*** (here-in-after the "Owner") and/or the Owners Representative(s) to support the ***Caesars Lane WWTP Expansion Project: Phase 2.***

B. Abatement Contractor shall provide for personnel air monitoring to satisfy OSHA regulation 29 CFR Parts 1926.1101(f). All work performed shall be in strict accordance with applicable provisions and regulations promulgated under New York State Department of Labor, Industrial Code 56 (ICR-56).

C. The Abatement Contractor shall satisfy the requirements for asbestos projects issued by the New York State Department of Labor concerning licensing and certification; notification; equipment; removal and disposal procedures; engineering controls; work area preparation; decontamination and clean-up procedures; and personnel air monitoring.

D. The Abatement Contractor shall be responsible for submittal of asbestos project notification(s) and applicable fees to EPA and NYSDOL concerning this project. Project notification(s) shall be made for the cumulative total of ACM to be removed as required by ICR-56-3.4. Work practices for each individual work area established shall be consistent with the quantity of ACM contained within that work area as defined in ICR-56-2.

E. The scope of work under this contract shall include the following:

1. All asbestos-containing materials (ACM) shall be removed in accordance with these specifications. The Abatement Contractor is responsible for field verification of estimated quantities, locations and other site conditions that may affect work.

2. All fixed objects remaining within the work area(s) shall be protected as required by Title 12 NYCRR Section 56-7.10(b) and as described in these specifications.

3. The containerization, labeling and disposal of all asbestos waste in accordance with applicable city, state and federal regulations and these specifications.

4. The Abatement Contractor will be responsible for repairing all building components damaged during abatement including, but not limited to, ceiling tiles, ceiling finishes, wall finishes and/or floor finishes, etc.

5. The Abatement Contractor shall be responsible for any and all demolition required to access materials identified in scope of work and on associated drawings.

6. Concealed conditions that are exposed and may require additional work shall be brought to the attention of the Owner(s) immediately. The Abatement Contractor shall not abate these areas without a written notice to proceed. If the Abatement Contractor removes additional asbestos prior to the order to proceed the additional work will not be acknowledged.

7. Permissible working hours shall be Monday through Friday 7:00 A.M. to 4:00 P.M. and/or as defined by the Owner(s) and/or Owner's Representative(s). Holidays shall be considered weekends and not included for working days. Upon written approval from the Owner, the Abatement Contractor may work past these hours. The Abatement Contractor will incur any and all costs associated for work performed beyond the defined schedule including, but not limited to: abatement activities, project/air monitoring, custodial/staffing labor, overtime, mobilizations, etc.

8. Buildings will be turned over to the Abatement Contractor as is. At that time, all electrical services and HVAC systems in the proposed work areas will be shut down. Electricity and water supply will be maintained in the building for use by the Abatement Contractor. The Abatement Contractor is responsible for securing all power in the work area(s) and establishing all temporary GFCI hookups necessary to complete his work.

9. The Abatement Contractor shall remove all identified Asbestos-containing Materials (ACM) to building substrate(s); in areas indicted. Subsequent to final air clearances, the substrate(s) shall be washed with a neutralizing agent to prepare the substrate to accept new floor covering and eliminate residual odors.

10. The Abatement Contractor must coordinate location of waste containers with the Facility and the Owner. Deliveries and storage of equipment must be coordinated with the Facility and the Owner.

11. All "Large" and "Small" asbestos abatement projects, as defined by 12 NYCRR56 shall not be performed while the building is occupied. The term "building" means a wing or major section of a building that can be completely isolated from the rest of the building with sealed non-combustible construction. The isolated portion of the building must contain exists that do not pass through the occupied portion(s) and ventilation systems must be physically separated and sealed at the isolation barriers.

1.02 PRE-CONTRACT SUBMITTALS

Within three (3) days after bids are opened, the three (3) apparent low bidders shall be required to submit the following documentation:

A. Resume': Shall include the following:

1. Provide a list of projects of similar nature performed within the past two (2) years and include the dollar value of all projects. Provide project references to include owner, consultant, and air monitoring firms' name, contact person, address, and phone number, include location of project and date of completion.

2. Abatement Contractor license issued by New York State Department of Labor for asbestos work in accordance with ICR-56-3.

3. A list of owned equipment available to be used in the performance of the project.

4. The number of years engaged in asbestos removal.

5. An outline of the worker training courses, and medical surveillance program conducted by the Abatement Contractor.

6. A standard operating procedures manual describing work practices and procedures, equipment, type of decontamination facilities, respirator program, special removal techniques, etc.
7. Documentation to the satisfaction of the Owner pertaining to the Abatement Contractor's financial resources available to perform the project. Such data shall include, but not be limited to, the firm's balance sheet for the last fiscal year.

B. Citations/Violations/Legal Proceedings

1. Submit a notarized statement describing any citations, violations, criminal charges, or legal proceedings undertaken or issued by any law enforcement, regulatory agency, or consultant concerning performance on previous asbestos abatement contracts. Briefly describe the circumstances citing the project and involved persons and agencies as well as the outcome of any actions.

2. Answer the question: "Has your firm or its agents been issued a Stop Work order on any project within the last two years?" If "Yes" provide details as discussed above.

3. Answer the question: "Are you now, or have you been in the past, a party to any litigation or arbitrations arising out of your performance on Asbestos Abatement Contracts?" If "Yes" provide details as discussed in 1. above.

4. Describe any liquidated damages assessed within the last two years.

C. Preliminary Schedule

1. Provide a detailed schedule including work dates, work shift times, estimate of manpower to be utilized and the start and completion date for completion of each major work area.

1.03 DOCUMENTATION

A. The Abatement Contractor shall be required to submit the following and receive the Consultant's approval prior to commencing work on this project:

1. Provide documentation of worker training for each person assigned to the project. Documentation shall include copies of each workers valid New York State asbestos handler certificates (for those employees who may perform asbestos removal), documentation of current respirator fit test and current OSHA required training and medical examination.

2. The attached "Asbestos Employee Medical Examination Statement" and "Asbestos Employee Training Statement" forms shall be completed, signed and submitted for each worker assigned to the project. Records of all employee training and medical surveillance shall be maintained for at least forty (40) years. Copies of the records shall be submitted to the Consultant prior to commencement.

3. The Abatement Contractor shall submit proof of a current, valid license issued by the New York State Department of Labor pursuant to the authority vested in the Commissioner by section 906 of the Labor Laws, and that the employees performing asbestos related work on this project are certified by the State of New York as required in Part 56 of Title 12 of the Official Compilation of Codes, Rules and Regulations of the State of New York latest edition. Copies of all licenses shall be submitted prior to the commencement of the project.

4. The Abatement Contractor shall submit a written respiratory protection program meeting the requirements of 29 CFR 1910.134 to the Consultant.

5. The name, address, social security number and NYS DOL certificate number of the person(s) who will supervise the asbestos project.

6. The name and address of the deposit or waste disposal site or sites where the asbestos materials are to be deposited or disposed of. This site must be approved by the Owner. The manifesting procedure must also be specified.

7. The name, address and New York State Dept. of Environmental Conservation ID Number of any transporters that are to be used to transport waste.

8. A written Standard Operation Procedure (SOP) that is designed and implemented to maximize protection against human exposure to asbestos dust. The SOP shall take into consideration the workers, visitors, building employees, general public and environment. As a minimum the procedures must include the following:

   a. Security for all work areas on an around-the-clock basis against unauthorized access.

   b. Project organization chart including the phone numbers of at least two responsible persons who shall be authorized to dispatch men and equipment to the project in the event of an emergency; including weekends.

   c. Description of protective clothing and NIOSH approved respirators to be used.

   d. Description of all removal methods to be used, including HEPA air filtration and decontamination sequence with special emphasis on any procedure that may deviate from these specifications.

   e. A list of manufacturers' certificates stating that all vacuums, negative air filtration equipment, respirators and air supply equipment meet OSHA and EPA requirements.

   f. A list of all materials proposed to be furnished and used under this contract.

g. Emergency evacuation procedures in the event of fire, smoke or accidents such as injury from falling, heat exposure, electrical shock, etc.

h. The name, address and ELAP number of the New York State Department of Health Certified Analytical Testing Laboratory the Contractor proposes to use for the OSHA monitoring.

9. A detailed plan, in triplicate, for the phasing of the project, division of work areas and location of decontamination facilities, waste containers and temporary office.

10. Work schedule, identifying firm dates and completion for actual areas. Bar chart or critical path chart indicating phases is required.

B. The Abatement Contractor shall post their NYS DOL contractor's license and maintain a daily log documenting the dates and time of the following items within each personal decontamination unit:

1. Meetings; purpose, attendants, discussion (brief)

2. Sign-in and sign-out of all persons entering the work area including name, date, time, social security number, position or function and general description of daily activity.

3. Testing of barriers and enclosure systems using smoke tubes prior to the beginning of abatement activities and at least once a day thereafter until satisfactory clearance air monitoring results have been achieved.

4. Inspection of all plastic barriers, twice daily, by the asbestos supervisor.

5. Loss of enclosure integrity; special or unusual events, barrier breaches, equipment failures, etc.

6. Daily cleaning of enclosures.

7. Personnel air monitoring test results for OSHA Compliance. Results shall be posted at the work site within 24 hours of testing and copies supplied to the Owner within five (5) days of testing. Abnormalities shall be supplied to the Owner immediately.

C. Documentation with confirmation signature of Consultant's representative of the following shall be provided by the Abatement Contractor at the final closeout of the project.

1. Testing of barriers and enclosure systems using smoke tubes shall be performed prior to the beginning of abatement activities and at least once a day thereafter until satisfactory clearance air monitoring results have been achieved.

2. Inspection of all plastic barriers.

3. Removal of all polyethylene barriers.

4. Consultant's inspections prior to encapsulation.

5. Removal of waste materials.

6. Decontamination of equipment (list items).

7. Consultant's final inspection/final air tests.

D. The Abatement Contractor shall provide records of all project information, to include the following which shall be submitted upon completion of the project and prior to approval of the Abatement Contractor's payment application:

1. The location and description of the abatement project.

2. The name, address and social security number of the person(s) who supervised the asbestos project.

3. Certified payroll documentation Pursuant to Article 8, Section 220 of the NYS Labor Law

4. Copies of EPA/NYSDOL Asbestos Certificates for all Workers and Supervisors employed on the Project.

5. Copies of Medical Approval and Respirator Fit Testing for all Asbestos Workers and Supervisors employed on the Project.

6. Copies of Abatement Contractors Daily Sign-In Sheets & Logs for persons entering and leaving the work area. – Title 12 NYCRR Part 56-7.3.

7. Copies of Abatement Contractor's personal air sampling laboratory results.

8. The amounts and type of asbestos materials that was removed, enclosed, encapsulated, or disturbed.

9. The name and address of the deposit or waste disposal site or sites where the asbestos waste materials were deposited or disposed of and all related manifests, receipts and other documentation associated with the disposal of asbestos waste.

10. The name and address of any transporters used to transport waste and all related manifests, receipts and other documentation associated with the transport of asbestos waste.

11. All other information that may be required by state, federal or local regulations.

12. Copy of the Supervisor's Daily Project Log of events as described in 1.03 B, above.

1.04 NOTIFICATIONS AND PERMITS

A. The Abatement Contractor shall be required to prepare and submit notifications to the following agencies at least ten (10) days prior to the commencement of the project:

1. Asbestos NESHAPS Contact
   U.S. Environmental Protection Agency
   NESHAPS Coordinator, Air Facilities Branch
   26 Federal Plaza
   New York, New York 10007
   (212) 264-7307

2. State of New York Department of Labor
   Division of Safety and Health
   Asbestos Control Bureau
   State Office Building Campus, Building 12, Room 454
   Albany, New York 12240

3. Owner(s): Town of New Windsor
   555 Union Avenue
   New Windsor, NY 12553
   ATTN: Michael Weeks, Town Engineer
   Ph. (845) 563-4618
   E-mail. mweeks@mhepc.com

4. Environmental Consultant(s): Quality Environmental Solutions & Technologies, Inc. (QuES&T)
   1376 Route 9
   Wappingers Falls, New York 12590
   ATTN: Rudy Lipinski, Director of Field Operations
   Ph. (845) 298-6031
   E-mail. rlipinski@qualityenv.com

B. The notification shall include but not be limited to the following information:

1. Name and address of Owner.

2. Name, address and asbestos handling license number of the Abatement Contractor.

3. Address and description of the building, including size, age, and prior use of the building or area; the amount, in square feet or linear feet of asbestos material to be removed; room designation numbers or other local information where asbestos material is found, including the type of asbestos material (friable or non-friable).
4. Scheduled starting and completion dates for removal.

5. Methods to be employed in abating asbestos containing materials.

6. Procedures and equipment, including ventilating/exhaust systems, that will be employed to comply with the Code of Federal Regulation (CFR) Title 40, Part 61 of the U.S. Environmental Protection Agency.

7. The name and address of the carting company and of the waste disposal site where the asbestos waste will be deposited.

NOTE: Notifications shall be submitted using standard forms as may be used by the respective agency.

For DOL (NYS) include "Asbestos Project Notification" form (DOSH-483) with proper fee, if required. For EPA include "Notification of Demolition and Renovation"; 40 CFR Part 61.

C. The Abatement Contractor shall secure any permits required by the city, town, county, or state that may be required and the cost for obtaining the permit shall be included in his base bid.

D. The Abatement Contractor shall erect warning signs around the work space at every point of potential entry into the work area in accordance with OSHA 1926.58k (2), (i). These signs shall bear the following information:

DANGER

CANCER AND LUNG DISEASE HAZARD
AUTHORIZED PERSONNEL ONLY
RESPIRATORS AND PROTECTIVE
CLOTHING
ARE REQUIRED IN THIS AREA

E. The Abatement Contractor shall post at entrances to the work place and immediate adjacent areas, notifications to building occupants which include the name and license number of the contractor, project location and size, amount and type of ACM, abatement procedures, dates of expected occurrence and name and address of the air monitor and laboratory in compliance with ICR 56-3.6.

F. The Abatement Contractor shall post a list of emergency telephone numbers at the job site which shall include the Owner's Representative, police, emergency squad, local hospital, Environmental Protection Agency, N.Y. State Department of Labor, Occupational Safety and Health Administration and the local Department of Health.

1.05 APPLICABLE STANDARDS

Except to the extent that more explicit or more stringent requirements are written directly into the contract documents, applicable standards of the construction industry have the same force and effects (and are made a part of contract documents by reference) as if copied directly into contract documents, or as if published copies were bound herewith. Resolution of overlapping and conflicting requirements, which result from the application of several different industry standards to the same unit of work, shall be by adherence to the most stringent requirement.

A. Applicable standards listed in these Specifications form a part of this Specification and include, but are not necessarily limited to, standards promulgated by the following agencies and organizations:

1. ANSI:
   American National Standards Institute
   1430 Broadway
   New York, New York 10018

2. ASHRAE:
   American Society for Heating, Refrigerating
   and Air Conditioning Engineers
   1791 Tullie Circle NE
   Atlanta, Georgia 30329

3. ASTM:
   American Society for Testing and Materials
   1916 Race Street
   Philadelphia, Pennsylvania 19103

4. CFR
   Code of Federal Regulations Available
   from Government Printing Office
   Washington, District of Columbia 20402

5. CGA
   Compressed Gas Association
   1235 Jefferson Davis Highway
   Arlington, Virginia 22202

6. CS
   Commercial Standard of NBS
   (US Dept. of Commerce)
   Government Printing Office

7. EPA
   Environmental Protection Agency, Region II
   26 Federal Plaza
   New York, New York 10007
   Asbestos Coordinator - Room 802
   (212) 264-9538
   Part 61, Sub-Parts A & B
   National Emission Standard for Asbestos

8. FEDERAL SPECS
   Federal Specification (General Services Administration)
   7th and D Street, SW
   Washington, District of Columbia 20406

9. NBS
   National Bureau of Standards
   (US Department of Commerce)
   Gaithersburg, Maryland 20234

10. NEC
    National Electrical Code (by NFPA)

11. NFPA
    National Fire Protection Association
    Batterymarch Park
    Quincy, Massachusetts 02269

12. NIOSH
    National Institute for Occupational Safety and Health
    26 Federal Plaza
    New York, New York 10007

13. NYSDOH
    New York State Department of Health
    Bureau of Toxic Substance Assessment
    Room 359 - 3rd Floor
    Tower Building Empire State Plaza
    Albany, New York 12237

14. NYSDEC
    New York State Department of Environmental Conservation
    Room 136
    50 Wolf Road
    Albany, New York 12233-3245

15. NYSDOL
    State of New York Department of Labor
    Division of Safety and Health
    Asbestos Control Program
    State Campus
    Building 12
    Albany, New York 12240

16. OSHA
    Occupational Safety and Health Administration
    (US Department of Labor)
    New York Regional Office - room 3445
    1515 Broadway
    New York, New York 10036

17. UL
    Underwriters Laboratories
    333 Pfingsten Road
    Northbrook, Illinois 60062

B. Federal Regulations: Those which govern asbestos abatement work or hauling and disposal of asbestos waste materials:

1. U.S. Department of Labor, Occupational Safety and Health Administration, (OSHA):

a. Asbestos Regulations
Title 29, Part 1910, of the Code of Federal Regulations.

b. Respiratory Protection
Title 29, Part 1910, Section 134 of the Code of Federal Regulations.

c. Construction Industry
Title 29, Part 1926, of the Code of Federal Regulations.

d. Access to Employee Exposure & Medical Records
Title 29, Part 1910, Section 20 of the Code of Federal Regulations.

e. Hazard Communication
Title 29, Part 1910, Section 1200 of the Code of Federal Regulations.

f. Specifications for Accident Prevention Signs and Tags
Title 29, Part 1910, section 145 of the Code of Federal Regulations.

2. U.S. Environmental Protection Agency (EPA):

a. Asbestos Hazard Emergency Response Act (AHERA) Regulation Asbestos Containing Materials in Schools Final Rule & Notice Title 40, Part 763, Subpart E of the Code of Federal Regulations.

b. Worker Protection Rule
40 CFR Part 763, Subpart G, CPTS 62044, FLR 2843-9
Federal Register, Vol. 50, No. 134, 7/12/85, P28530-28540

c. Regulation for Asbestos
Title 40, Part 61, Subpart A of the Code of Federal Regulations

d. National Emission Standard for Asbestos
Title 40, Part 61, Subpart M (Revised Subpart B) of the Code of Federal Regulations

e. Resource Conservation and Recovery Act (RCRA) 1976, 1980
Hazardous and Solid Waste Amendments (HSWA) 1984
Subtitle D, Subtitle C

3. U.S. Department of Transportation (DOT):

a. Hazardous Substances: Final Rule Regulation 49 CFR, Part 171 and 172.

C. State Regulations: Those which govern asbestos abatement work or hauling and disposal of asbestos waste materials:

1. New York State Department of Environmental Conservation (DEC) Regulations regarding waste collection registration. Title 6, Part 364 of the New York State Official Compilation of Codes, Rules and Regulations - 6NYCRR 364.

2. New York State Right-To-Know Law

3. New York State Department of Labor Asbestos Regulations Industrial Code Rule 56.

4. New York State Department of Health, Title 10 Part 73 Asbestos Safety Program Requirements.

D. Standards: Those which govern asbestos abatement work or hauling and disposal of asbestos waste materials:

1. American National Standards Institute (ANSI)

   a. Fundamentals Governing the Design and Operation of Local Exhaust Systems
      Publication Z9.2-79

   b. Practices for Respiratory Protection
      Publication Z88.2-80

E. Guidance Documents: Those that discuss asbestos abatement work or hauling, and disposal of asbestos waste materials are listed below only for the Abatement Contractor's information. These documents do not describe the work and are not a part of the work of this contract.

EPA:

1. Guidance for Controlling Asbestos Containing Materials in Buildings (Purple Book) EPA560/5-85-024.

2. Asbestos Waste Management Guidance EPA 530-SW-85-007.

F. Patents and Royalties: The Abatement Contractor shall pay all royalties and/or license fees. The Abatement Contractor shall defend all suits and claims for infringement of any patent rights and save the Owner and Consultant harmless from loss including attorney fees on account thereof.

1.06 DEFINITIONS

As used in or in connection with these specifications the following are terms and definitions.

Abatement - Procedure to control release from asbestos material. This includes removal, encapsulation and enclosure.

Aggressive sampling - A method of sampling in which the person collecting the air sample creates activity by the use of mechanical equipment during the sampling period to stir up settled dust and simulate activity in that area of the building.

AIHA - The American Industrial Hygiene Association, 475 Wolf Ledges Parkway, Akron, Ohio 44311.

Airlock - A system for permitting entrance and exit while restricting air movement between a containment area and an uncontaminated area. It consists of two curtained doorways separated by a distance of at least three feet such that one passes through one doorway into the airlock, allowing the doorway sheeting to overlap and close off the opening before proceeding through the second doorway, thereby preventing flow-through contamination.

Air sampling - The process of measuring the content of a known volume of air collected during a specific period of time.

Amended water - Water to which a surfactant has been added.

Approved asbestos safety program - A program approved by the Commissioner of Health providing training in the various disciplines that may be involved in an asbestos project.

Area air sampling - Any form of air sampling or monitoring where the sampling device is placed at some stationary location.

Asbestos - Any naturally occurring hydrated mineral silicate separable into commercially usable fibers, including chrysotile (serpentine), amosite (cumingtonite-gunerite), crocidolite (riebeckite), tremolite, anthophyllite and actinolite.

Asbestos contract - An oral or written agreement contained in one or more documents for the performance of work on an asbestos project and includes all labor, goods and service.

Asbestos handler - An individual who installs, removes, applies, encapsulates, or encloses asbestos or asbestos material, or who disturbs friable asbestos. Only individuals certified by NYS Department of Labor shall be acceptable for work under this specification.

Asbestos handling certificate - A certificate issued by the Commissioner of Labor of the State of New York, to a person who has satisfactorily completed an approved asbestos safety program.

Asbestos project - Work undertaken by a contractor which involves the installation, removal, encapsulation, application or enclosure of any ACM or the disturbance of friable ACM.

Asbestos Safety Technician (AST) - Individual designated to represent the Consultant, perform third party monitoring and perform compliance monitoring at the job site during the asbestos project.

Asbestos waste material - Asbestos material or asbestos contaminated objects requiring disposal.

Authorized visitor - The building owner, his or her representative or any representative of a regulatory or other agency having jurisdiction over the project.

Background level monitoring - A method used to determine ambient airborne concentrations inside and outside of a building or structure prior to starting an abatement project.

Building owner - The person in whom legal title to the premises is vested unless the premises are held in land trust, in which instance Building Owner means the person in whom beneficial title is vested.

Clean room - An uncontaminated area or room that is a part of the personal decontamination enclosure with provisions for storage of persons' street clothes and protective equipment.

Cleanup - The utilization of HEPA vacuuming to control and eliminate accumulations of asbestos material and asbestos waste material.

Clearance air monitoring - The employment of aggressive sampling techniques with a volume of air collected to determine the airborne concentration of residual fibers upon conclusion of an asbestos abatement project.

Commissioner - Commissioner of the New York State Department of Labor.

Contractor - A company, unincorporated association, firm, partnership or corporation and any owner or operator thereof, which engages in an asbestos project or employs persons engaged in an asbestos project.

Curtained doorway - A device that consists of at least three overlapping sheets of plastic over an existing or temporarily framed doorway. One sheet shall be secured at the top and left side, the second sheet at the top and right side, and the third sheet at the top and the left side. All sheets shall have weights attached to the bottom to ensure that the sheets hang straight and maintain a seal over the doorway when not in use.

Decontamination enclosure system - A series of connected rooms, separated from the work area and from each other by air locks, for the decontamination of persons, materials, equipment, and authorized visitors.

Encapsulant (sealant) or encapsulating agent - A liquid material that can be applied to asbestos material and which prevents the release of asbestos from the material by creating a membrane over the surface.

Enclosure - The construction of airtight walls, ceilings and floors between the asbestos material and the facility environment, or around surfaces coated with asbestos materials, or any other appropriate procedure that prevents the release of asbestos materials.

Equipment room - A contaminated area or room that is part of the personal decontamination enclosure system with provisions for the storage of contaminated clothing and equipment.

Fixed object - A unit of equipment, furniture or other fixture in the work area which cannot be readily removed from the work area.

Friable Asbestos Material - That condition of crumbled, pulverized, powdered, crushed or exposed asbestos capable of being released into the air by hand pressure.

Friable material containment - The encapsulation or enclosure of any friable asbestos material.

Glovebag technique - A method for removing asbestos material from heating, ventilating, and air conditioning (HVAC) ducts, piping runs, valves, joints, elbows, and other nonplanar surfaces in a noncontained work area. The glovebag assembly is a manufactured device consisting of a glovebag constructed of at least six mil transparent plastic, two inward-projecting longsleeve gloves, which may contain an inward projecting waterwand sleeve, an internal tool pouch, and an attached, labeled receptacle or portion for asbestos waste. The glovebag is constructed and installed in such a manner that it surrounds the object or area to be decontaminated and to contain all asbestos fibers released during the abatement process.

HEPA filter - A high efficiency particulate air filter capable of trapping and retaining 99.97 percent of particulate greater than 0.3 microns equivalent aerodynamic diameter.

HEPA vacuum equipment - Vacuuming equipment with a high efficiency particulate air filtration system.

Holding area - A chamber in the waste decontamination enclosure located between the washroom and an adjacent uncontaminated area.

Homogeneous work area - A site within the abatement work area that contains one type of asbestos material and where one type of abatement is used.

Large asbestos project - An asbestos project involving the installation, removal, disturbance, enclosure, or encapsulation of 160 square feet or more of asbestos or asbestos material or 260 linear feet or more of asbestos or asbestos material.

Minor asbestos project - An asbestos project involving the installation, removal, disturbance, enclosure, or encapsulation of 10 square feet or less of asbestos or asbestos material, or 25 linear feet or less of asbestos or asbestos material.

Movable object - A unit of equipment, furniture or fixture in the work area that can be readily removed from the work area.

Negative air pressure equipment - A local exhaust system equipped with HEPA filtration. The system shall be capable of creating and maintaining a negative pressure differential between the outside and the inside of the work area.

Non-asbestos material - Any material containing one percent or less asbestos by weight.

Occupied area - Any frequented portion of the work site where abatement is not taking place.

Outside air - The air outside the building or structure.

Personal air monitoring - A method used to determine an individual’s exposure to airborne contaminants. The sample is collected outside the respirator in the person's breathing zone.

Plasticize - To cover floors, walls, ceilings and other surfaces with 6 mil fire retardant plastic sheeting as herein specified.

Project - Any form of work performed in connection with the abatement of asbestos or alteration, renovation, modification or demolition of a building or structure that may disturb asbestos or asbestos material.

Removal - The stripping of any asbestos material.

Repair - Corrective action using required work practices to control fiber release from damaged areas.

Respiratory protection - Respiratory protection required of licensed asbestos workers and authorized visitors in accordance with the applicable laws.

Satisfactory clearance air monitoring results - For all post- abatement samples, airborne concentrations of total fibers that are less than 0.01 fibers per cubic centimeter or background levels, whichever are greater, using phase contrast microscopy (PCM).

Shower room - A room between the clean room and the equipment room in the personal decontamination enclosure with hot and cold running water controllable at the top and arranged for complete showering during decontamination.

Small asbestos project - An asbestos project involving the installation, removal, disturbances, enclosure, or encapsulation of more than 10 and less than 160 square feet of asbestos or asbestos material of more than 25 and less than 260 linear feet of asbestos or asbestos material.

Staging area - The area near the waste transfer airlock where containerized asbestos waste has been placed prior to removal from the work area.

Surfactant - A chemical wetting agent added to water to improve its penetration.

Visible emissions - An emission of particulate material that can be seen without the aid of instruments.

Washroom - A room between the work area and the holding area in the waste decontamination enclosure system, where equipment and waste containers are wet cleaned and/or HEPA vacuumed.

Waste decontamination enclosure system - An area, consisting of a washroom and a holding area, designated for the controlled transfer of materials and equipment.

Wet cleaning - The process of eliminating asbestos contamination from surfaces, equipment or other objects by using cloths, mops, or other cleaning tools.

Work area - Designated rooms, spaces, or areas where asbestos abatement takes place.

Work site - Premises where asbestos abatement is taking place.

Work Surface - Substrate surface from which asbestos-containing material has been removed.

1.07 UTILITIES, SERVICE AND TEMPORARY FACILITIES

A. The Owner shall make available to the Abatement Contractor all reasonable amounts of water and electrical power at no charge.

B. The Abatement Contractor shall provide, at his own expense, all electrical, water, and waste connections, extensions, and construction materials, supplies, etc. All connections must be approved in advance by the Owner and all work relative to the utilities must be in accordance with the applicable building codes.

C. The Abatement Contractor shall provide scaffolding, ladders and staging, etc. as necessary to accomplish the work of this contract. The type, erection and use of all scaffolding, ladders and staging, etc. shall comply with all applicable OSHA provisions.

D. All connections to the Owner's water system shall include reduced pressure backflow protection or double check and double gate valves. Valves shall be temperature and pressure rated for operation of the temperatures and pressures encountered. After completion of use, connections and fittings shall be removed without damage or alteration to existing water piping and equipment. Leaking or dripping valves shall be piped to the nearest drain or located over an existing sink or grade where water will not damage existing finishes or equipment.

E. The Abatement Contractor shall use only heavy-duty abrasion resistant hoses with a pressure rating greater than the maximum pressure of the water distribution system to provide water to each work area and to each decontamination unit. Provide fittings as required to allow for connection to existing wall hydrants or spouts, as well as temporary water heating equipment, branch piping, showers, shut-off nozzles and equipment. All water must be shut off at the end of each shift.

F. The Abatement Contractor shall provide service to decontamination unit electrical subpanel with minimum 60-amp, 2 pole circuit breaker or fused disconnect and ground-fault circuit interrupters (GFCI), reset button and pilot light, connected to the building's main distribution panel. Subpanel and disconnect shall be sized and equipped to accommodate all electrical equipment required for completion of the work. This electrical subpanel shall be used for hot water heater, PAPR battery recharging and air sampling pumps.

G. The Abatement Contractor shall provide UL rated 40-gallon electric hot water heater to supply hot water for the decontamination unit shower. Activate from 30-amp circuit breaker on the electrical subpanel located within the decontamination unit. Provide with relief valve compatible with water heater operation, relief valve down to drip pan on floor with type L copper. Wiring of the hot water heater shall follow NEMA, NEC, and UL standards.

H. The Abatement Contractor shall provide identification warning signs at power outlets, which are other than 110-120-volt power. Provide polarized outlets for plug-in type outlets, to prevent insertion of 110-120 plugs into higher voltage outlets. Dry transformers shall be provided where required to provide voltages necessary for work operations. All outlets or power supplies shall be protected by ground fault circuit interrupter (GFCI) at the power source.

I. The Abatement Contractor shall use only grounded extension cords; use "hard-service" cords where exposed to abrasion and traffic. Use single lengths or use waterproof connectors to connect separate lengths of electric cords if single lengths will not reach areas of work.

J. The Abatement Contractor shall provide general service incandescent lamps of wattage indicated or required for adequate illumination; Protect lamps with guard cages or tempered glass enclosures; Provide exterior fixtures where fixtures are exposed to moisture.

K. The Abatement Contractor shall provide temporary heat or air conditioning as necessary to maintain comfortable working temperatures inside and immediately outside the work areas. Heating and A/C equipment shall have been tested and labeled by UL, FM or another recognized trade association related to the fuel being used. Fuel burning heaters shall not be used inside containment areas. The Contractor shall also provide a comfortable working environment for occupied areas that are impacted by the asbestos removal.

L. The Abatement Contractor shall comply with recommendations of the NFPA standard in regard to the use and application of fire extinguishers. Locate fire extinguishers where they are most convenient and effective for their intended purpose but provide not less than one extinguisher in each work area, equipment room, clean room and outside the work area.

1.08 REMOVAL OF FIXTURES

A. In locations where the Abatement Contractor is directed to dispose of fixtures, he shall either decontaminate the fixtures and dispose of them as non-asbestos containing materials or he shall place them in an appropriate container and dispose of them as asbestos containing material.

B. In locations where the Abatement Contractor is directed to remove and reinstall fixtures, the fixtures shall be removed, decontaminated, labeled, protected with plastic and stored by the contractor in a location as directed by the Owner.

C. Upon completion of the asbestos removal and upon receiving satisfactory clearance air monitoring results, all items to be replaced shall be restored to their original location and reinstalled by the Abatement Contractor.

PART 2 – PRODUCTS

2.01 MATERIALS AND EQUIPMENT

A. GENERAL REQUIREMENTS

1. Materials shall be stored off the ground, away from wet or damp surfaces and under protective cover to prevent damage or contamination.

2. Damaged or deteriorating materials shall not be used and shall be removed from the premises.

3. Power tools used to drill, cut into, or otherwise disturb asbestos material shall be equipped with HEPA filtered local exhaust ventilation.

4. The Abatement Contractor shall make available to authorized visitors, ladders and/or scaffolds of sufficient dimension and quantity so that all work surfaces can be easily and safely reached for inspection. Scaffold joints and ends shall be sealed with tape to prevent incursion of asbestos. Scaffolds and ladders shall comply with all applicable codes.

B. PLASTIC BARRIERS (POLYETHYLENE)

1. In sizes and shapes to minimize the number of joints.

   a. Six mil. (.006") fire-retardant for vertical protection (walls, entrances and openings).

   b. Six mil. (.006") fire-retardant for horizontal protection (fixed equipment) and heating grilles.

   c. Six mil. (.006") reinforced fire-retardant for floors of decon units.

2. Provide two (2) layers over all roof, wall and ceiling openings. Floor penetrations shall be sealed with a rigid material prior to plasticizing to prevent tripping and fall hazards. All seams within a layer shall be separated by a minimum distance of six feet and sealed airtight. All seams between layers shall be staggered.

3. Barrier Attachment - Commercially available duct tape (fabric or paper) and spray-on adhesive. Duct tape shall be capable of sealing joints of adjacent sheets of plastic, facilitating attachment of plastic sheets to finished or unfinished surfaces of dissimilar materials and adhering under both dry and wet conditions.

C. SIGNS

1. Danger signs shall be provided and shall conform to 29 CFR 1926.1101 and be 14" x 20". These signs shall bear the following information:

DANGER
ASBESTOS
CANCER AND LUNG DISEASE HAZARD
RESPIRATORS AND PROTECTIVE
CLOTHING
ARE REQUIRED IN THIS AREA

D. DANGER LABELS AND TAPE

1. Labels shall be affixed to any asbestos contaminated material in accordance with the requirements of 29 CFR 1910.1200 (f) of OSHA's Hazard Communication Standard, and shall contain the following information:

DANGER
CONTAINS ASBESTOS FIBERS
AVOID BREATHING DUST
CANCER AND LUNG DISEASE HAZARD

2. A label shall be affixed on each container of asbestos waste in accordance with the requirements of 49 CFR Parts 171 and 172, Hazardous Substances; Final Rule (U.S. Department of Transportation), and shall contain the following information:

RQ HAZARDOUS SUBSTANCE
SOLID, NOS, ORM-E, NA 9188
(ASBESTOS)

3. A label shall be affixed on each container of asbestos waste in accordance with the requirements of 40 CFR Part 61.150, NESHAP; Asbestos; Final Rule (USEPA) and shall contain the name of the waste generator and the location at which the waste was generated.
   NOTE: All containers marked as above (1,2 and 3) shall be disposed of as asbestos waste.

4. Provide 3" red barrier tape printed with black lettered "DANGER ASBESTOS REMOVAL". Locate barrier tape across all corridors, entrances and access routes to asbestos work area.

E. PROTECTIVE EQUIPMENT

1. Respiratory Requirements

   a. Where fiber levels permit, and in compliance with regulatory requirements, Powered Air Purifying Respirators are the minimum allowable respiratory protection permitted to be utilized during removal operations.

   b. Where not in violation of NIOSH, OSHA, and any other regulatory requirements, the Abatement Contractor shall provide the following minimum respiratory protection to the maximum use concentrations indicated:

MSHA/NIOSH Approved Respiratory Protection	Maximum Use Concentration
Half-Mask Air Purifying with HEPA Filters	10x PEL
Full-Facepiece Air Purifying HEPA Filters and Quantitative Fit Test	10x PEL
Powered Air Purifying (PAPR), Loose fitting Helmet or Hood, HEPA Filter	25x PEL
Powered Air Purifying (PAPR), Full Facepiece, HEPA Filter	50x PEL
Supplied Air, Continuous Flow Loose fitting Helmet or Hood	25x PEL

Supplied Air, Continuous Flow Full Facepiece, HEPA Filter	50x PEL
Full Facepiece-Supplied Air Pressure Demand, HEPA Filter	100x PEL
Full Facepiece-Supplied Air Pressure Demand, with Aux. SCBA, Pressure Demand or Continuous Flow	>100x PEL

2. Disposable Clothing -"Tyvek" manufactured by Dupont or approved equal.

3. NIOSH approved safety goggles to protect eyes.

4. Polyethylene bags, 6 mil. (.006") thick (use double bags).

NOTE: Workers must always wear disposable coveralls and respirator masks while in the work area. Contaminated coveralls or equipment must be left in work area and not worn into other parts of the building.

F. TOOLS AND EQUIPMENT

1. Airless Sprayer - An airless sprayer, suitable for application of encapsulating material, shall be used.

2. Scaffolding - Scaffolding, as required to accomplish the specified work, shall meet all applicable safety regulations.

3. Transportation Equipment - Transportation equipment, as required, shall be suitable for loading, temporary storage, transport and unloading of contaminated waste without exposure to persons or property. Watertight, hard wall containers shall be provided to retain and dispose of any asbestos waste material with sharp-edged components that may tear plastic bags or sheeting. The containers shall be marked with danger labels.

4. Surfactant - Wetting Agents - "Asbestos-Wet" - Aquatrols Corp. of America or approved equal and shall be non-carcinogenic.

5. Portable (negative air pressure) asbestos filtration system - by Micro-Trap or approved equal.

6. Vacuum, HEPA type equal to "Nilfisk" #GA73, or "Pullman/Holt" #75 ASA.

7. Amended Water Sprayer - The water sprayer shall be an airless or other low-pressure sprayer for amended water application.

8. Other Tools and Equipment - The Abatement Contractor shall provide other suitable tools for the stripping, removal, encapsulation, and disposal activities including but not limited to: hand-held scrapers, nylon brushes, sponges, rounded edge shovels, brooms, and carts.

PART 3 – EXECUTION

3.01 PRE-ABATEMENT WORK AREA PREPARATION

A. The work area shall be vacated by the occupants prior to work area preparation and not reoccupied until satisfactory clearance air monitoring results have been achieved.

B. Caution signs shall be posted at all locations and approaches to a location where airborne concentrations of asbestos may exceed ambient background levels. Signs shall be posted that permit a person to read the sign and take the necessary protective measures to avoid exposure.

C. Shut down and lock out electric power to all work areas. The Abatement Contractor shall provide temporary power and lighting and ensure safe installation of temporary power sources and equipment used where high humidity and/or water shall be sprayed in accordance with all applicable codes. All power to work areas shall be brought in from outside the area through a ground-fault interrupter at the source.

D. Isolate the work area HVAC system.

E. The personnel decontamination enclosure system shall be installed or constructed prior to preparatory work in the work area and in particular before the disturbance of asbestos material. The waste decontamination enclosure system shall be installed or constructed prior to commencement of abatement activities.

F. Movable objects within the work area shall be pre-cleaned using HEPA filtered vacuum equipment and/or wet cleaning and such objects shall be removed from the work area to an uncontaminated location. If disposed of as asbestos waste material, cleaning is not required.

G. Fixed objects and other items, which are to remain within the work area, shall be pre-cleaned using HEPA filtered vacuum equipment and/or wet cleaning. Such objects shall be enclosed with two layers of at least six mil plastic sheeting and sealed with tape.

H. The work area shall be pre-cleaned using HEPA filtered vacuum equipment and/or wet cleaning. Methods that raise dust, such as dry sweeping or vacuuming with equipment not equipped with HEPA filters, shall be prohibited. Asbestos material shall not be disturbed during pre-cleaning.

I. Isolation barriers that seal off all openings, including windows, corridors, doorways, ducts, and any other penetrations of the work area, shall be constructed using two layers of at least six mil fire-retardant plastic sheeting sealed with tape. Also, all seams in mechanical system components that pass through the work area shall be sealed. Doorways and corridors, which shall not be used for passage during work, shall also be sealed.

J. Removal of mounted objects. After isolation barriers are in place, objects such as light fixtures, electrical track, alarm systems, ventilation equipment and other items not previously sealed, shall be double sealed with six mil fire-retardant plastic sheeting. Localized HEPA filtered vacuum equipment shall be used during fixture removal to reduce asbestos dispersal.

K. Individual roof and floor drains shall be sealed watertight using two layers of 6-mil fire-retardant plastic sheeting and tape prior to plasticizing. Openings in floor shall be fully covered with plywood sheeting secured to the floor in such a way as to minimize a tripping hazard prior to plasticizing.

L. Emergency and fire exits from the work area shall be maintained or alternate exits shall be established according to all applicable codes.

M. Adequate toilet facilities shall be supplied by the Abatement Contractor and shall be located either in the clean area of the personnel decontamination enclosure or shall be readily accessible to the personnel decontamination enclosure.

3.02 LARGE ASBESTOS PROJECT PERSONNEL DECONTAMINATION ENCLOSURE SYSTEM (ICR 56-7.5)

A. The personnel decontamination enclosure shall be constructed prior to preparatory work in the work area and in particular before the disturbance of asbestos material.

1. Construction and use of personnel decontamination enclosure systems shall be in accordance with ICR-56 and any Applicable or Site-Specific Variances utilized on this project. Such systems may consist of existing rooms outside of the work area, if the layout is appropriate, that can be enclosed is plastic sheeting and are accessible from the work area. When this situation does not exist, enclosure systems may be constructed out of metal, wood or plastic support.

2. The personnel decontamination enclosure system shall consist of a clean room, a shower room, and an equipment room, in series, separated from each other and from the work area by three airlocks.

3. There shall be one shower per six full shift abatement persons calculated on the basis of the largest shift.

4. The personnel decontamination enclosure system shall be fully framed, sheathed for safety and constructed to prevent unauthorized entry.

5. Personnel decontamination enclosure systems constructed at the work site shall utilize at least six mil fire-retardant opaque plastic sheeting. At least two layers of six mil fire-retardant reinforced plastic sheeting shall be used for the flooring of this area.

6. All prefabricated decontamination units shall be completely decontaminated and sealed prior to separation and removal from the work area. Mobile decontamination units shall remain in place until satisfactory clearance results have been attained.

7. The clean room shall be sized to accommodate all authorized persons. Benches, lockers and hooks shall be provided for street clothes. Shelves for storing respirators shall also be provided. Clean clothing, replacement filters for respirators, towels and other necessary items shall be provided. The clean room shall not be used for the storage of tools, equipment or materials. It shall not be used for office space. A lockable door shall be provided to permit access to the clean room from outside the work area or enclosure. It shall be used to secure the work area and decontamination enclosure during off-shift hours.

8. The shower room shall contain one or more showers. Each shower head shall be supplied with hot and cold water adjustable at the tap. The shower enclosure shall be constructed to ensure against leakage of any kind. Uncontaminated soap, shampoo and towels shall be available at all times. Shower water shall be drained, collected and filtered through a system with at least 5.0 micron particle size collection capability. A system containing a series of several filters with progressively smaller pore sizes shall be used to avoid rapid clogging of the filtration system by large particles. Filtered wastewater shall be discharged in accordance with applicable codes. Contaminated filters shall be disposed of as asbestos waste. The shower room shall be constructed in such way that travel through the decontamination unit shall be through the shower.

9. The equipment room shall be used for the storage of equipment and tools after decontamination using a HEPA filtered vacuum and/or wet cleaning. A one day supply of replacement filters, in sealed containers, for HEPA vacuums and negative pressure ventilation equipment, extra tools, containers of surfactant and other materials and equipment that may be required during the abatement project may also be stored here. A walk-off pan filled with water shall be located in the work area just outside the equipment room for persons to clean foot covering when leaving the work area. A drum lined with a labeled, at least six mil plastic bag is required for collection of clothing and shall be located in this room. Contaminated footwear and work clothes shall be stored in this area.

3.03 WASTE DECONTAMINATION ENCLOSURE SYSTEM (ICR 56-7.5)

A. General Requirements

1. A waste decontamination enclosure system shall consist of the following:

   a. A washroom/cleanup room shall be constructed with an airlock doorway to the work area and another airlock doorway to the holding area.

   b. The holding area shall be constructed with an airlock doorway to the washroom/cleanup room and another lockable door to the outside.

2. Where there is only one egress from the work area, the holding area of the waste decontamination enclosure system may branch off from the equipment decontamination room, which doubles as a waste washroom, of the personnel decontamination enclosure.

3. The waste washroom shall be equipped with a drain installed to collect water and deliver it to the shower drain where it shall be filtered through a system with at least 5.0 micron particle size collection capability. A system containing a series of several filters with progressively smaller pore sizes shall be used to avoid rapid clogging of the filtration system by large particles. Filtered wastewater shall be discharged in accordance with applicable codes. Contaminated filters shall be disposed of as asbestos waste.

4. The waste washroom shall be constructed in such a way that travel through the rooms shall be through the waste washroom

3.04 WORK AREA ENTRY AND EXIT PROCEDURES

A. The following procedures shall be followed throughout the asbestos abatement project until satisfactory clearance air monitoring results have been achieved:

1. All persons shall enter and exit the work area through the personnel decontamination enclosure system.

2. All persons who enter the work area or an enclosure shall sign the entry/exit log, located in the clean room, upon every entry and exit.

3. All persons, before entering the work area, or an enclosure shall read and be familiar with all posted regulations, personal protection requirements, including work area entry and exit procedures, and emergency procedures. The entry/exit log headings shall indicate, and the signatures shall be used to acknowledge, that these have been reviewed and understood by all persons prior to entry.

4. All persons shall proceed first to the clean room, remove all street clothing, store these items in clean sealable plastic bags or lockers and don coveralls, head covering, foot covering and gloves. All persons shall also don NIOSH approved respiratory protection. Clean respirators and protective clothing shall be utilized, by each person, for each separate entry into the work area. Respirators shall be inspected prior to each use and tested for proper seal using quantitative or qualitative fit checks.

5. Persons wearing designated personal protective equipment shall proceed from the clean room through the shower room to the equipment room, where necessary tools are collected and any additional clothing shall be donned, before entry into the work area.

6. Before leaving the work area, all persons shall remove gross contamination from the outside of respirators and protective clothing by brushing, wet cleaning, and/or HEPA vacuuming.

7. Persons shall proceed to the equipment room where all coveralls, head covering, foot covering and gloves shall be removed. Disposable clothing shall be deposited into labeled containers for disposal. Reusable contaminated clothing, footwear, head gear and gloves shall be stored in the equipment room when not being used in the work area.

8. Still wearing respirators, persons shall proceed to the shower area, clean the outside of the respirator and the exposed face area under running water prior to removal of the respirator, and then fully and vigorously shower and shampoo to remove residual asbestos contamination. Respirators shall be washed thoroughly with soap and water. Some types of respirators will require slight modification of these procedures. An airline respirator with HEPA filtered disconnect protection shall be disconnected in the equipment room and worn into the shower. A powered air-purifying respirator facepiece shall be disconnected from the filter/power pack assembly prior to entering the shower.

9. After showering and drying, all persons shall proceed to the clean room and don clean personal protective equipment if returning to the work area or street clothing if exiting the enclosure.

3.05 EQUIPMENT AND WASTE CONTAINER DECONTAMINATION & REMOVAL PROCEDURES

A. The following procedures shall be followed throughout the asbestos abatement project until satisfactory clearance air monitoring results have been achieved.

1. External surfaces of contaminated containers and equipment shall be cleaned by wet cleaning and/or HEPA vacuuming in the work area before moving such items into the waste decontamination enclosure system airlock by persons assigned to this duty. These work area persons shall not enter the airlock.

2. These contaminated items shall be removed from the airlock by persons stationed in the washroom during waste removal operations. These washroom persons shall remove gross contamination from the exterior of their respirators and protective clothing by brushing, HEPA vacuuming and/or wet cleaning.

3. Once in the waste decontamination enclosure system, external surfaces of contaminated containers and equipment shall be cleaned a second time by wet cleaning.

4. The cleaned containers of asbestos material and equipment are to be dried of any excessive pooled or beaded liquid, placed in uncontaminated plastic bags or sheeting and sealed airtight.

5. The clean recontainerized items shall be moved into the airlock that leads to the holding area. The washroom persons shall not enter this airlock or the work area until waste removal is finished for that period.

6. Containers and equipment shall be moved from the airlock and into the holding area by persons dressed in clean personal protective equipment, who have entered from uncontaminated areas.

7. The cleaned containers of asbestos material and equipment shall be placed in water tight carts with doors or tops that shall be closed and secured. These carts shall be held in the holding area pending removal. The carts shall be wet cleaned and/or HEPA vacuumed at least once each day.

8. The exit from the decontamination enclosure system shall be secured to prevent unauthorized entry.

9. Where the waste removal enclosure is part of the personnel decontamination enclosure, waste removal shall not occur during shift changes or when otherwise occupied. Precautions shall be taken to prevent short circuiting and cycling of air outward through the shower and clean room.

10. Containers labeled with Asbestos hazard warnings shall not be used to dispose of non asbestos waste.

3.06 ENGINEERING CONTROLS

A. Ventilation.

1. The Abatement Contractor shall employ HEPA equipped vacuums or negative air pressure equipment for ventilation as required.

2. All negative air pressure equipment ventilation units shall be equipped with HEPA filtration. The Contractor shall provide a manufacturer's test certificate for each unit documenting the capability of trapping and retaining 99.97 percent of asbestos fibers greater than 0.3 microns equivalent aerodynamic diameter.

3. A power supply shall be available to satisfy the requirements of the total of all ventilating units.

4. On electric power failure, abatement shall stop immediately and shall not resume until power is restored and exhaust units are operating fully. On extended power failure, longer than one hour, the decontamination facilities, after the evacuation of all persons from the work area, shall be sealed airtight.

5. If extending the exhaust of the ventilation units 50 feet from the building would result in an exhaust location either in the road, blocking driveway access to the facility or within 50 feet of other buildings, a second unit will be run in series with the primary unit.

3.07 MAINTENANCE OF DECONTAMINATION ENCLOSURE SYSTEMS AND WORK AREA BARRIERS

A. GENERAL REQUIREMENTS

1. The Consultant must review and approve installation before commencement of work. Upon completion of the construction of all plastic barriers and decontamination system enclosures and prior to beginning actual abatement activities.

2. All plastic barriers inside the work area, in the personnel decontamination enclosure system, in the waste decontamination enclosure system and at partitions constructed to isolate the work area from occupied areas, shall be inspected by the asbestos supervisor at least twice daily. The barriers shall be inspected before the start of and following the completion of the day's abatement activities. Inspections and observations shall be documented in the project log.

3. Damage and defects in the barriers and/or enclosure systems shall be repaired immediately upon discovery and prior to resumption of abatement activities.

4. At any time during the abatement activities, if visible emissions are observed outside of the work area of if damage occurs to the barriers, work shall be stopped, repairs made and visible residue immediately cleaned up using HEPA vacuuming methods prior to the resumption of abatement activities.

5. The Abatement Contractor shall HEPA vacuum and/or wet clean the waste decontamination enclosure system and the personnel decontamination enclosure system at the end of each day of abatement activities.

3.08 HANDLING AND REMOVAL PROCEDURES

The Abatement Contractor may utilize existing provisions of ICR-56, Applicable Variances or a Site-Specific Variance, approved by the Owner's Consultant, to permit the conduct of this work.

3.09 ABATEMENT PROCEDURES

A. AIR SAMPLING - By Owner

1. Air sampling and analysis shall be conducted according to the requirements of Subpart 56-4 before the start, during and after the completion of the asbestos removal project.

2. In addition to the requirements of Subpart 56-4, air monitoring shall be conducted in accordance with any approved job specific variance(s) or applicable variance utilized.

3. Clearance samples may be analyzed using PCM to maintain compliance with ICR-56.

4. If applicable, clearance samples will be analyzed using TEM to maintain compliance with ICR-56 and 40 CFR 763.90[i].

B. The provisions of the Applicable Variances or a Job Specific Variance shall apply only in those areas where approval has been granted by the NYS DOL and the Contractor has obtained concurrence from the Owner's Consultant. All other applicable provisions of Industrial Code Rule 56-1 through 56-12 shall be complied.

C. A copy of the NYS DOL Job Specific or Applicable Variance, if applicable, shall be conspicuously posted at the work area(s).

D. The Abatement Contractor shall construct a decontamination unit at the work site. The Abatement Contractor shall, as a minimum, comply with the requirements of 29 CFR 1926.1101(j); Hygiene facilities and practices for employees.

3.10 ENCAPSULATION PROCEDURES

The following procedures shall be followed to seal in non-visible residue, after obtaining satisfactory clearance air monitoring results, while conducting lockdown encapsulation on any surfaces which were the subject of removal or other remediation activities:

A. Only encapsulants rated as acceptable or marginally acceptable on the basis of Battelle Columbus Laboratory test procedures and rating requirements developed under the 1978 USEPA contract shall be used for lockdown encapsulation.

B. Sealants considered for use in encapsulation shall first be tested to ensure that the sealant is adequate for its intended use. A section of the work surface shall be evaluated following this initial test application of the sealant to quantitatively determine the sealant's effectiveness in terms of penetrating and locking down the asbestos fibers. The American Society of Testing and Materials (ASTM) Committee E06.21.06E on Encapsulation of Building Materials has developed a guidance document to assist in the selection of an encapsulant.

C. The encapsulant solvent or vehicle shall not contain a volatile hydrocarbon.

D. Encapsulants shall be applied using airless spray equipment.

1. Spraying is to occur at the lowest pressure range possible to minimize fiber release from encapsulant impact at the surface. It shall be applied with a consistent horizontal or vertical motion.

E. Encapsulation shall be utilized as a surface sealant once all asbestos containing materials have been removed in a work area. In no event shall encapsulant be applied to any surface that was the subject of removal or other remediation activities prior to obtaining satisfactory clearance air monitoring.

3.11 CLEANUP PROCEDURES

A. The following cleanup procedures shall be required.

1. Cleanup of accumulations of loose asbestos material shall be performed whenever enough loose asbestos materials have been removed to fill a single leak tight container of the type commensurate with the material properties. In no case shall cleanup be performed less than once prior to the close of each working day. Asbestos material shall be kept wet until cleaned up.

2. Accumulations of dust shall be cleaned off all surfaces on a daily basis using HEPA vacuum cleaning methods.

3. Decontamination enclosures shall be HEPA vacuumed at the end of each shift.

4. Accumulations of asbestos waste material shall be containerized utilizing HEPA vacuums or rubber or plastic dust pans, squeegees or shovels. Metal shovels shall not be used to pick up or move waste.

5. Excessive water accumulation or flooding in the area shall require work to stop until the water is collected and disposed of properly.

B. The following cleanup procedures shall be required after completion of all removal activities.

1. All accumulations of asbestos waste material shall be containerized utilizing HEPA vacuums or rubber or plastic dust pan, squeegees or shovels. Metal shovels shall not be used to pick up or move waste. HEPA vacuums shall be used to clean all surfaces after gross cleanup.

2. Cleaning. All surfaces in the work area shall be HEPA vacuumed. To pick up excess liquid and wet debris, a wet purpose shop vacuum may be used and shall be decontaminated prior to removal from the work area.

3. Windows, doors, HVAC system vents and all other openings shall remain sealed. Decontamination enclosure systems shall remain in place and be utilized.

4. All containerized waste shall be removed from the work area and the holding area.

5. All tools and equipment shall be decontaminated and removed from the work area.

6. A final visual inspection and clearance air monitoring, as per the schedule for air sampling and analysis, shall be conducted.

7. The isolation barriers and decontamination unit shall be removed only after satisfactory clearance air monitoring results have been achieved.

3.12 SAFETY MONITORING – CONSULTANT:

The Consultant will designate an Asbestos Safety Technician (AST) to represent the Owner during the removal program. The AST must be on the job site at all times during abatement work. Absolutely no abatement or preparation work will occur without the presence of the AST.

The AST will conduct four (4) milestone inspections.

1. Pre-commencement inspection shall be conducted as follows:

   a. Notification in writing to the Consultant shall be made by the Abatement Contractor to request a pre-commencement inspection at least 48 hours in advance of the desired date of inspection. This inspection shall be requested prior to beginning preparatory work in another work area.

   b. The AST shall ensure that:

      i. The job site is properly prepared and that all containment measures are in place;

      ii. The designated supervisor shall present to the inspector a valid supervisor's license issued by the New York Department of Labor;

      iii. All workers shall present to the inspector a valid handler's license issued by the New York Department of Labor;

      iv. Measures for the disposal of removed asbestos material are in place and shall conform to the adopted standards;

      v. The Abatement Contractor has a list of emergency telephone numbers at the job site which shall include the monitoring firm employed by the Owner and telephone numbers for fire, police, emergency squad, local hospital and health officer.

   c. If all is in order, the AST shall issue a written notice to proceed in the field. If the job site is not in order, then any needed corrective action must be taken before any work is to commence. Conditional approvals shall not be granted.

Progress inspection shall be conducted as follows:

   a. Primary responsibility for ensuring that the abatement work progresses in accordance with these technical specifications and regulatory requirements rests with the Abatement Contractor. The AST shall continuously be present to observe the progress of work and perform required tests.

b. If the AST observes irregularities at any time, he shall direct such corrective action as may be necessary. If the Abatement Contractor fails to take the corrective action required, or if the Abatement Contractor or any of their employees habitually and/or excessively violate the requirements of any regulation, then the AST shall inform the Owner who shall issue a Stop Work Order to the Abatement Contractor and have the work site secured until all violations are abated.

Clean-up inspections shall be conducted as follows:

a. Notice for clean-up inspection shall be requested by the Abatement Contractor at least 24 hours in advance of the desired date of inspection;

b. The clean-up inspection shall be conducted prior to the removal of any isolation or critical barriers and before final air clearance monitoring;

c. The AST shall ensure that:

i. The work site has been properly cleaned and is free of visible asbestos containing material and debris.

ii. All removed asbestos has been properly placed in a locked secure container outside of the work area.

d. If all is in order, the AST shall issue a written notice of authorization to remove surface barriers from the work area. All isolation barriers shall remain in place until satisfactory clearance air sampling has been completed.

4. Clearance Visual Inspection shall be conducted after the removal of non-critical plastic sheeting. The AST shall insure that:

a. The work area is free of all visible asbestos or suspect asbestos debris and residue.

b. All waste has been properly bagged and removed from the work area.

c. Should clearance visual inspection identify residual debris, as determined by the AST, the Abatement Contractor is responsible for recleaning the area at his own cost and shall bear all costs of reinspection until acceptable levels are achieved.

B. The Abatement Contractor shall be required to receive written approval before proceeding after each milestone inspection.

3.13 PERSONNEL AIR MONITORING – CONTRACTOR (29 CFR 1926.1101)

A. Personnel air monitoring shall be provided to determine both short-term (STEL) and full shift during when abatement activities occur. Personnel sampling shall be performed in each work area in order to accurately determine the concentrations of airborne asbestos to which workers may be exposed.

B. The Abatement Contractor shall have a qualified "Competent Person" (as specified in 29 CFR 1926 OSHA) to conduct personnel air monitoring.

C. The laboratory performing the air sample analysis shall be certified by NYS DOH ELAP and approved by the consultant.

D. Personnel air monitoring test results for OSHA Compliance. Results shall be posted at the work site within 24 hours of testing and copies supplied to the Owner within five (5) days of testing. Abnormalities shall be supplied to the Owner immediately.

3.14 CLEARANCE AIR MONITORING

A. Air samples will be collected in and around the work areas at the completion of abatement activities.

B. Clearance samples may be analyzed using PCM to maintain compliance with ICR-56.

C. If applicable, clearance samples will be analyzed using TEM to maintain compliance with ICR-56 and 40 CFR part 763 “Asbestos-Containing Materials in Schools; Final Rule and Notice” section 763.90.

D. ***RETESTING***
Should clearance air monitoring yield fiber concentrations above the “Clearance” criteria of either 0.01 fibers per CC and/or background levels (PCM) –OR- seventy (70) structures per square millimeter (TEM/AHERA), the Abatement Contractor is responsible for re-cleaning the area at his own cost and shall bear all costs associated with the retesting of the work area(s) including monitoring labor, sampling, analysis, etc. until such levels are achieved.

3.15 RESPIRATORY PROTECTION REQUIREMENT

A. Respiratory protection shall be worn by all individuals inside the work area from the initiation of the asbestos project until all areas have successfully passed clearance air monitoring in accordance with these specifications. The Abatement Contractor shall keep available at all times two PAPR's with new filters and charged batteries for use by authorized visitors.

B. All respiratory protection shall be MSHA/NIOSH approved in accordance with the provisions of 30 CFR Part II. All respiratory protection shall be provided by the Abatement Contractor and used by workers in conjunction with the written respiratory protection program.

C. The Abatement Contractor shall provide respirators that meet the requirements of 29 CFR Parts 1910 and 1926.

1. Full facepiece Type C supplied-air respirators operated in pressure demand mode equipped with an auxiliary self- contained breathing apparatus, operated in pressure demand or continuous flow, shall be worn during gross removal, demolition, renovation and/or other disturbance of ACM whenever airborne fiber concentrations inside the work area are greater than 10.0 f/cc.

2. Full facepiece Type C supplied-air respirators operated in pressure demand mode with HEPA filter disconnect protection shall be work during gross removal, demolition, renovation and/or other disturbance of ACM with an amphibole content and/or whenever airborne fiber concentrations inside the work area are equal to or greater than 0.5 f/cc and less than or equal to 10.0 f/cc.

3. Full facepiece powered air-purifying respirators (PAPR) equipped with HEPA filters shall be worn during the removal, encapsulation, enclosure, repair and/or other disturbance of friable ACM if airborne fiber concentrations inside the work area are less than 0.5 f/cc. A supply of charged replacement batteries, HEPA filters and flow test meter shall be available in the clean room for use with powered air-purifying respirators. HEPA filters shall be changed daily or as flow testing indicates change is necessary. Any Type C supplied-air respirator operated in continuous flow, with HEPA filter disconnect protection, may be substituted for a powered air-purifying respirator.

4. Loose fitting helmets or hoods with powered air-purifying respirators (PAPR) equipped with HEPA filters may be worn during the removal, encapsulation, enclosure, repair and/or other disturbance of friable ACM if airborne fiber concentrations inside the work area are less than 0.25 f/cc. A supply of charged replacement batteries, HEPA filters and flow test meter shall be available in the clean room for use with powered air-purifying respirators. HEPA filters shall be changed daily or as flow testing indicates change is necessary. Any Type C supplied-air respirator operated in continuous flow may be substituted for a powered air- purifying respirator.

5. Half-mask or full-face air-purifying respirators with HEPA filters shall be worn only during the preparation of the work area and final clean up procedures provided airborne fiber concentrations inside the work area are less than 0.1 f/cc.

6. Use of single use dust respirators is prohibited for the above respiratory protection.

D. Workers shall be provided with personally issued and individually marked respirators. Respirators shall not be marked with any equipment that will alter the fit of the respirator in any way. Only waterproof identification markers shall be used.

E. The Abatement Contractor shall ensure that the workers are qualitatively or quantitatively fit tested by an Industrial Hygienist initially and every six months thereafter with the type of respirator he/she will be using.

F. Whenever the respirator design permits, workers shall perform the positive and negative air pressure fit test each time a respirator is worn. Powered air-purifying respirators shall be tested for adequate flow as specified by the manufacturer.

G. No facial hair, which interferes with the face-to-mask sealing surface, shall be permitted to be worn when wearing respiratory protection that requires a mask-to-face seal.

H. Contact lenses shall not be worn in conjunction with respiratory protection.

I. If a worker wears glasses, a spectacle kit to fit their respirator shall be provided by the Abatement Contractor at the Abatement Contractor's expense.

J. Respiratory protection maintenance and decontamination procedures shall meet the following requirement:

1. Respiratory protection shall be inspected and decontaminated on a daily basis in accordance with OSHA 29 CFR 1910.134(b); and

2. HEPA filters for negative pressure respirators shall be changed after each shower; and

3. Respiratory protection shall be the last piece of worker protection equipment to be removed. Workers must wear respirators in the shower when going through decontamination procedures; and

4. Airline respirators with HEPA filtered disconnect shall be disconnected in the equipment room and worn into the shower. Powered air-purifying respirator facepieces shall be worn into the shower. Filtered/power pack assemblies shall be decontaminated in accordance with manufacturers' recommendations; and

5. Respirators shall be stored in a dry place and in such a manner that the facepiece and exhalation valves are not distorted; and

6. Organic solvents shall not be used for washing of respirators.

K. No visitors shall be allowed to enter the contaminated area if they do not have their medical certification and training certificate. Authorized visitors shall be provided with suitable PAPR respirators and instructions on the proper use of respirators whenever entering the work area.

3.16 DISPOSAL OF WASTE

A. APPLICABLE REGULATIONS

1. All asbestos waste shall be stored, transported and disposed of as per, but not limited to, the following Regulations:

   a. NYS Code Rule 56

   b. U.S. Department of Transportation (DOT)
      Hazardous Substances
      Title 29, Part 171 and 172 of the code of Federal Regulations
      regarding waste collector registration

   c. Regulations regarding waste collector registration Title 6, part 364 of the New York State Official Compilation of Codes, Rules and Regulations – 6 NYCRR 364

   d. USEPA NESHAPS 40 CRF 61

   e. USEPA ASBESTOS WASTE MANAGEMENT GUIDANCE EPA/530-SW-85-007

B. TRANSPORTER OR HAULER - The Abatement Contractor shall bear full responsibility for proper characterization, transportation and disposal of all solid or liquid waste, generated during the project, in a legal manner. The Owner shall approve all transportation and disposal methods.

1. The Abatement Contractor's Transporter (hauler) and disposal site shall be approved by the Owner. The Abatement Contractor shall remove within 48 hours all asbestos waste from the site after completing the clean up.

2. The Transporter must possess and present to the Owner's representative a valid New York State Department of Environmental Conservation Part 364 asbestos hauler's permit to verify license plate and permit numbers. The Owner's representative will verify the authenticity of the hauler's permit with the proper authority.

3. The Abatement Contractor shall give 24 hour notification prior to removing any waste from the site. All waste shall be removed from site only during normal working hours. No waste may be taken from the site without authorization from the Owner's representative.

4. The Abatement Contractor shall have the Transporter give the date and time of arrival at the disposal site.

5. The Transporter with the Abatement Contractor and Owner's consultant shall inspect all material in the transport container prior to taking possession of and signing the Waste Manifest. The Transporter shall not have any off-site transfers or be combined with any other off-site asbestos material.

6. The Transporter must travel directly to the disposal site with no unauthorized stops.

C. WASTE STORAGE CONTAINER

1. During loading and on-site storage, the asbestos waste container shall be labeled with EPA Danger signage:

DANGER
CONTAINS ASBESTOS FIBERS
AVOID CREATING DUST
CANCER AND LUNG DISEASE HAZARD

2. The NYS DEC Hauler's Permit number shall be on both sides and back of the container.

3. The Container will not be permitted to leave the site without the proper signage.

4. A copy of the completed waste manifest shall be forwarded directly to the Owner's Consultant by the disposal facility.

5. Packaging of Non-friable Asbestos. Use of an open top container shall require written request, by the Contractor, and written approval by the Owners Representative, and be performed in compliance with all applicable regulations.

   a) A chute, if used, shall be air/dust tight along its lateral perimeter and at the terminal connection to the dumpster at ground level (solid wall and top container). The upper end of the chute shall be furnished with a hinged lid, to be closed when the chute is not being used.

   b) The container shall be lined with a minimum of two (2) layers of 6 mil. Fire-retardant polyethylene draped loosely over the sides so as to facilitate being wrapped over the top of the load and sealed prior to transport from the site.

   c) Prior to transport from the work site the Dumpster will be disconnected from the chute and sealed air/dust tight utilizing six mil plastic and tape. The waste material will be transported as an asbestos containing material by appropriate legal methods.

6. Packaging Friable Asbestos.

   a) The container shall be a solid wall, hard top and lockable container.

   b) The container shall be locked upon arrival at the site to restrict access. Security shall be provided at the entrance to the container during the loading process and immediately locked upon completion.

   c) The interior walls, floor and ceiling shall be lined with two (2) layers of 6 mil. Fire-retardant polyethylene.

   d) The waste shall be loaded in such a manner as to protect the integrity of the individual waste packages.

   e) Prior to transport from the work site the interior of the Dumpster will sealed air/dust tight utilizing six mil plastic and tape. The waste material will be transported as an asbestos containing material by appropriate legal methods.

D. WASTE DISPOSAL MANIFEST

1. The Asbestos Waste Manifest shall be equivalent to the “Waste Shipment Record” included in 40 CFR 61. A copy of the Contractor’s manifest shall be reviewed by the Owner’s Consultant and shall be the only manifest used.

2. The Manifest shall be verified by the Owner’s Consultant indicating that all the information and amounts are accurate and the proper signatures are in place.

3. The Manifest shall have the signatures of the Abatement Contractor and the Transporter prior to any waste being removed from the site.

4. The Manifest shall be signed by the Disposal Facility owner or operator to certify receipt of asbestos containing materials covered by the manifest.

5. A copy of the completed manifest shall be provided by the Abatement Contractor to the Owner's Consultant and remain on site for inspection.

6. Abatement Contractor shall maintain a waste disposal log which indicates load number, date and time left site, container size, type of waste, quantity of waste, name of hauler, NYS DES permit number, trailer and tractor license number, and date manifest was returned to Consultant.

7. The Disposal Facility owner or operator shall return a signed copy of the Waste Manifest directly to:

Town of New Windsor
555 Union Avenue
New Windsor, NY 12553
ATTN: Michael Weeks – Town Engineer

8. Copies of the completed Waste Manifest are to be sent by the disposal facility to the Hauler and Abatement Contractor.

9. Submit signed dump tickets and manifests with final payment request.

10. Final payment request will not be honored without signed dump ticket or manifests accounting for all asbestos waste removed from the site.

E. VIOLATIONS OF SPECIFICATIONS

1. Violations of the safety, hygiene, environmental, procedures herein, any applicable federal, state of local requirement s or failure to cooperate with the Owner's representative shall be grounds for dismissal and/or termination of this contract.

3.17 LOCATION OF "ABATEMENT WORK"

(Please see attached Drawings for approximate locations)

1) <u>CAESARS LANE WWTP DEWATERING BUILDING (INTERIOR ABATEMENT)</u>

- Abatement Contractor responsible for total and complete removal and disposal of approximately 6,000 SF of sheetrock with friable asbestos-containing Joint Compound, as detailed on associated abatement drawing(s) and attached project environmental survey report. Abatement Contractor responsible for all demolition required to access material(s), as well as for providing all equipment necessary to access material(s). See below for breakdown:
  - Upper Level, Break Room (500 SF)
  - Upper Level, Men's Bathroom (400 SF)
  - Upper Level, Women's Bathroom (300 SF)
  - Upper Level, Locker Rooms (450 SF)
  - Upper Level, Maintenance Room (350 SF)
  - Upper Level, Entrance Vestibule (750 SF)
  - Upper Level, Control Room #1 (700 SF)
  - Upper Level, Laboratory (450 SF)
  - Upper Level, Reception (600 SF)
  - Upper Level, Offices (800 SF)
  - Upper Level, Control Room #2 (700 SF)

Note #1: Abatement contractor responsible for disposal of all porous thermal systems insulation that may be present within wall cavities as asbestos-containing/contaminated materials.

2) <u>CAESARS LANE WWTP DEWATERING BUILDING (EXTERIOR ABATEMENT)</u>

- Abatement Contractor responsible for total and complete removal and disposal of approximately 60 LF of non-friable asbestos-containing caulk from the main entrance door/window system, as detailed on associated abatement drawings. Abatement Contractor responsible for all demolition required to access material(s), as well as for providing all equipment necessary to access material(s). Temporary security and environmental protection throughout the remaining openings shall be provided by the abatement contractor.
  - Main Entrance, Door & Window System Frame (60 LF)

3) <u>CAESARS LANE WWTP UNDERGROUND SITE WORK (EXTERIOR ABATEMENT)</u>

- Abatement Contractor responsible for removal and disposal of non-friable asbestos-containing transite piping that is known or may exist concealed below grade and will be impacted by the project. Abatement Contractor responsible for all excavation and equipment required to access material(s) facilitate removals.
  - Near Settling Tank #3, Protruding out of the Ground (3 LF Visible, and continues below grade)

Note #1: Excavator operator to have NYSDOL asbestos handler license to perform excavation to access transite piping. Mechanical excavation to be performed down to 6 inches around the pipe. Asbestos handlers perform hand excavation to expose the pipe.
Note #2: Abatement to be performed in compliance with ICR56-11.8 Abandoned Pipe/Duct/Conduit Wrap and Cut Removal, or an appropriately sized negative pressure tent regulated abatement enclosure and all other applicable federal and state regulations.

Note #3: If abatement contractor wants alternative means/methods for removal, they are to include the means/methods in their bid submission for review by the Town of New Windsor's environmental consultant. If a site-specific variance is required, the Town of New Windsor's consultant will develop the variance and submit it to NYSDOL ESU for review and approval.
Note #5: Coordinate removals with site contractor and design team.
Note #6: If additional underground transite piping is encountered during construction, the procedures outlined within this specification and any means/methods in approved site-specific variance shall be followed.

END OF LOCATION OF WORK

3.18 GENERAL

A. The Abatement Contractor will be responsible for repairing all building components damaged during abatement including, but not limited to: ceiling tiles, ceiling finishes, wall finishes, floor finishes, etc.

B. The Abatement Contractor shall be responsible for all demolition required to access materials identified in scope of work and on associated drawings.

C. Concealed conditions that are exposed and may require additional work shall be brought to the attention of the Owner immediately. The Abatement Contractor shall not abate these areas without a written notice to proceed. Additional asbestos abatement performed prior to the order to proceed will not be acknowledged.

D. The Abatement Contractor shall remove asbestos-containing floor covering to the building substrate beneath; in areas indicted. Subsequent to final air clearance the substrate shall be washed with a neutralizing agent to prepare the substrate to accept new floor covering and eliminate residual odors.

E. Power tools used to drill, cut into or otherwise disturb asbestos containing material shall be equipped with HEPA filtered local exhaust ventilation.

F. The Abatement Contractor shall provide access to GFCI electrical power, required to perform the area air monitoring for this project, within and immediately adjacent to each work area.

G. Unwrapped or unbagged ACM shall be immediately placed in an impermeable waste bag or wrapped in plastic sheeting.

H. Coordinate all removal operations with the Owner.

Asbestos Employee Medical Examination Statement
Certificate of Worker Release
Asbestos Employee Training Statement
CERTIFICATE OF WORKERS'S ACKNOWLEDGEMENT

PROJECT NAME: **Town of New Windsor: Caesars Lane WWTP Expansion Project: Phase 2**

CONTRACTOR'S NAME:_____

WORKING WITH ASBESTOS INVOLVES POTENTIAL EXPOSURE TO AIRBORNE ASBESTOS FIBERS. INHALING ASBESTOS FIBERS HAS BEEN LINKED WITH VARIOUS TYPES OF CANCER AND RESPIRATORY DISEASES. SMOKING CIGARETTES AND INHALATION OF ASBESTOS FIBERS INCREASES THE RISK THAT YOU WILL DEVELOP LUNG CANCER ABOVE THAT OF THE NON-SMOKING PUBLIC.

The Contract for this project requires your employer to 1) supply proper respiratory protection devices and training on their use 2) provide training on safe work practices and on use of the equipment used on the project 3) provide a medical examination meeting the requirements of 29 CFR 1926.1101. Your signature on this certificate, documents that your employer has fulfilled these contractual obligations and you understand the information presented to you.

************DO NOT SIGN THIS FORM UNLESS YOU FULLY UNDERSTAND THIS INFORMATION*********

RESPIRATORY PROTECTION: I have been trained in the proper use and limitations of the type of respiratory protection devices to be used on this project. I have reviewed the written respiratory protection program manual and a copy is available for my use. Respiratory protection equipment has been proved, by the Contractor, at no cost to me.

TRAINING COURSE: I have been trained in the risks and dangers associated with handling asbestos, breathing asbestos dust, proper work procedures, personal protection and engineering controls. I have satisfactorily completed and Asbestos Safety Training Program for New York State and have been issued a New York State Department of Health Certificate of Asbestos Safety Training.

MEDICAL EXAMINATION: I have satisfactorily completed a medical examination within the last 12 months that meets the OSHA requirement for an asbestos worker and included at least 1) medical history 2) pulmonary function 3) medical examination 4) approval to wear respiratory protection devises and may have included an evaluation of a chest x-ray.

Signature:_____Date_____

Printed Name:_____SS#:_____

Witness:_____Date:_____

Town of New Windsor: Caesars Lane WWTP Expansion Project: Phase 2

ESTIMATE OF ACM QUANTITIES

****
****

EACH ABATEMENT CONTRACTOR SHALL READ AND ACKNOWLEDGE THE FOLLOWING NOTICE. A SIGNED AND DATED COPY OF THIS ACKNOWLEDGMENT SHALL BE SUBMITTED WITH THE ABATEMENT CONTRACTOR'S BID FOR THIS PROJECT. FAILURE TO DO SO MAY, AT THE SOLE DISCRETION OF THE OWNER, RESULT IN THE BID BEING CONSIDERED NON-RESPONSIVE AND RESULT IN DISQUALIFICATION OF THE ABATEMENT CONTRACTOR'S BID ON THIS PROJECT.

****
****

***** NOTICE *****

The linear and square footages listed within this specification are approximates. Abatement Contractor is required to visit the work locations prior to bid submittal in order to take actual field measurements within each listed location. The Abatement Contractor shall base their bid on actual quantities determined, by them, at the site walkthrough. Estimates provided in these specifications are for informational purposes only and shall not be considered a basis for Change Orders on this project.

****
****

Acknowledgment: I have read and understand the above **NOTICE** regarding removal quantity estimates and understand that estimates provided in these specifications are for informational purposes only and shall not be considered a basis for Change Orders on this project. The Abatement Contractor's signatory represents to the Owner that he/she has the authority of the entity he/she represents to sign this agreement on its behalf.

Company Name: _____
Type or Print

BY: _____ _____ _____
Signature Title Date

Print Name: _____

THIS PAGE LEFT BLANK INTENTIONALLY

END OF SECTION

SECTION 028300
LEAD SAFE WORK PRACTICES

PART I – GENERAL

1.1 DESCRIPTION/SCOPE OF WORK

A. The work covered by these specifications shall consist of furnishing all labor, materials, tools, and equipment necessary to control and mitigate potential lead-based paint (LBP) hazards during demolition/renovation activities pertaining to the ***Town of New Windsor Caesars Lane WWTP Expansion Project: Phase 2.***

The following is a detailed listing of identified Lead-based Paint(s) and/or Lead-containing Material(s), above the EPA action level of 1.0 mg/sq. cm.:

TABLE I: IDENTIFIED LEAD-BASED PAINT
TOWN OF NEW WINDSOR
CAESARS LANE WWTP
EXPANSION PROJECT: PHASE 2

Location	LBP Component	Substrate	Color	LBP Condition
Dewatering Building				
Bypass Building	Steel Beams/Columns	Metal	Blue	Poor
Primary Tank #1, Primary Tank #3, & Trickling Filter #2	Outer Railing	Metal	Grey	Poor
Trickling Filter #1 & Trickling Filter #2	Catwalk Supports	Metal	Red	Poor
Trickling Filter #1 & Trickling Filter #2	Filter Motor	Metal	Blue	Poor

It should be noted that several components tested did in fact contain minimal lead-levels below the EPA threshold level of 1.0 mg/sq. cm for classification as Lead-Based Paint (LBP) and are considered lead-containing coatings by the OSHA Regulation, "Lead Exposure in Construction" (29 CFR 1926.62). OSHA does not recognize a minimum limit for lead concentrations in paint for the purposes of disturbance. Monitoring of workers performing demolition/cleaning/disturbance of painted surfaces shall be completed to document personnel occupational exposure. Items containing any amount of lead concentration are considered lead-containing coatings per 29 CFR 1926.62, OSHA Lead Exposure in Construction.

The work of this Contractor shall include the following, and shall be as required by specific work-related tasks and disturbance(s) of above-referenced Lead-based Paint(s) and/or Lead-containing Material(s), above the EPA action level of 1.0 mg/sq. cm:

1) Personnel air monitoring and analysis.

2) Waste characterization and classification.

3) Transportation/disposal off-site of LBP wastes/debris and lead-contaminated waste/debris generated from LBP disturbance(s).

B. Manual demolition, scraping and manual sanding of lead-based paint surfaces and power tool cleaning with dust collection systems shall be performed in conjunction with engineering and work practice controls meeting the requirements of 29 CFR 1926.62(e)(1).

C. Components with lead-based paint shall be removed intact to the extent practicable. A 6-mil polyethylene drop cloth shall be placed on either side of the component, prior to its removal, to catch any paint chips that may become dislodged. The component shall be wrapped in a layer of 6-mil polyethylene for movement to the disposal container. Follow proper disposal requirements. The area around the component removal shall be wet wiped and HEPA vacuumed, including the tent enclosure. The polyethylene sheeting shall be carefully folded in on itself and placed in a 6-mil disposal bag. Containment debris shall be properly disposed of as lead-based waste.

D. Chemical stripping should be used for LBP removal on surfaces that will be subjected to welding, cutting or torch burning. No chemical strippers containing methylene chloride shall be used by the Contractor on this project. Abrasive blasting, heat stripping, uncontained hydroblasting, welding, cutting or torch burning shall not be performed on surfaces where LBP is present. Abrasive blasting, heat stripping, uncontained hydroblasting, welding, cutting or torch burning shall only be performed on bare metal substrate.

E. The Contractor's use of a subcontractor shall not relieve the Contractor of full responsibility for the work to be performed.

F. If available, the Contractor may submit exposure assessment data obtained within the last twelve (12) months from previous jobs conducted under similar conditions, control methods, work practices and environmental conditions to be used in this contract. Other objective data may be used to demonstrate that work activities in this contract will not result in occupational exposures to airborne lead that exceeds the PEL. The assessment shall include comparable lead concentrations in coating materials, work practices, engineering controls and rates of work.

G. Until the exposure assessment is performed, the Contractor must provide to his workers the following: Respiratory protection with a minimum protection factor of 10, personal protective clothing, lead-free change areas, hand washing/shower facilities, biological monitoring and training per 29 CFR 1926.62.

This Specification shall be used as a Guideline for the use of Contractors who complete the demolition/renovation activities pertaining to the ***Town of New Windsor Caesars Lane WWTP Expansion Project: Phase 2*** as detailed within Section #1.2 of this specification. The intent of this Specification is to remain in conformance with 29 CFR 1926.62 and to maintain an airborne concentration of lead-dust below the action level. This Specification is written in order to outline the worst-case scenario in regard to lead safe work practices. However, the work procedures section is written in a manner, which outlines the requirements that should be necessary, at a minimum, to maintain an airborne concentration of lead dust below the action level.

H. The Contractor shall ensure that any HVAC equipment intakes within and around the work areas are protected by shutting down the units and/or installing HEPA filters over the intake. The Contractor shall coordinate rebalancing of the HVAC equipment prior to installing the HEPA filters. The Contractor shall alter the size and extent of the isolation barriers as necessary due to weather conditions, functional space use and density of building occupants in the vicinity, as required.

1.2 REGULATIONS & REFERENCE STANDARDS

A. General Requirements

All work of this section shall be conducted in strict accordance with all applicable Federal, State and Local regulations.

Matters of interpretations of the standards and regulations shall be submitted to the appropriate agency for resolution before starting work. Where these requirements vary the most stringent shall apply.

B. Specific Requirements

1. American National Standards Institute (ANSI)

   a. ANSI Z9.2-79 – Fundamentals Governing the Design and Operation of Local Exhaust Systems.

   b. Z88.2-80 – Practice for Respiratory Protection.

2. Title X - U.S. Department of Housing and Urban Development "Guidelines for the Evaluation and Control of Lead-Based Paint Hazards in Housing."

3. Code of Federal Regulations (CFR)

   a. 29 CFR Part 1910.120 – Hazardous Waste Operations and Emergency Response.

   b. 29 CFR Part 1910.134 – Respiratory Protection.

   c. 29 CFR Part 1910.146 – Confined Space Entry Program.

   d. 29 CFR Part 1910.1025 – Lead.

   e. 29 CFR Part 1910.1200 – Hazard Communication.

   f. 29 CFR Part 1926.55 – Gases, Vapors, Fumes, Dusts and Mists.

   g. 29 CFR Part 1926.57 – Ventilation.

   h. 29 CFR Part 1926.62 – Lead (Construction Industry Standard).

   i. 40 CFR Part 260 – Hazardous Waste Management Systems: General.

   j. 40 CFR Part 261 – Identification and Listing of Hazardous Waste.

   k. 40 CFR Part 262 – Generators of Hazardous Wastes.

   l. 40 CFR Part 263 – Transporters of Hazardous Waste.

   m. 40 CFR Part 264 – Owners and Operators of Hazardous Waste Treatment, Storage & Disposal Facilities.

   n. 40 CFR Part 265 – Interim Status Standards for Owners and Operators of Hazardous Waste Treatment, Storage & Disposal Facilities.

   o. 40 CFR Part 268 – Land Disposal Restrictions.

p. 40 CFR Part 745 – Lead; Requirements for Lead-Based Paint Activities in Child Occupied Facilities

q. 40 CFR Part 745.90 – EPA's Renovation, Repair & Painting Rule.

r. 49 CFR Parts 170-178 – Department of Transportation Regulations.

4. New York Codes of Rules and Regulations (NYCRR)

a. 6 NYCRR Part 360 – Solid Waste Regulations.

b. 6 NYCRR Part 364 – Waste Transporter Permits.

c. 6 NYCRR Part 370-373 – Hazardous Waste Regulations.

d. 8 NYCRR Part 155 – Uniform Safety Standards for School Construction & Maintenance Projects.

5. Steel Structures Painting Council (SSPC)

a. SSPC-Guide 6 – Guide for Containing Debris Generated During Paint Removal Operations.

SSPC-Guide 7 – Guide for the Disposal of Lead-Contaminated Surface Preparation Debris.

Preparation Debris.

6. Underwriters Laboratories. Inc. (UL)

a. UL 586 – High Efficiency, Particulate Air Filter Units.

1.3 DEFINITIONS

A. Abatement
For the purposes of this Specification, the term abatement shall refer to any procedure that impacts lead-based paint on any surface. Procedures can include: paint removal; whole removal of the surface (i.e. window replacement): demolition of painted surfaces; and clean-up of paint debris.

B. Action Level
Employee exposure without regard to use of respirators, to an airborne concentration of lead of thirty (30) micrograms per cubic meter of air averaged over an 8-hour period. As used in this section, micrograms per cubic meter of air" refers to the action level. (Note: For longer exposure period lower action level is triggered).

C. Area Monitoring
Sampling of lead concentrations within the lead control area (work area) and inside the physical boundaries which is representative of the airborne lead concentrations that may reach the breathing zone of personnel potentially exposed to lead.

D. Physical Boundary

Area physically roped or partitioned off around a work area to limit unauthorized entry of personnel. As used in this section, "inside boundary" shall mean the same as "outside lead control area."

E. Change Rooms and Shower Facilities
Rooms within the designated physical boundary around the work area equipped with separate storage facilities for clean protective work clothing and equipment and for street clothes which prevent cross-contamination.

F. Decontamination Room
Room for removal of contaminated personal protective equipment (PPE).

G. Eight-Hour Time Weighted Average (TWA)
Airborne concentration of lead averaged over an 8-hour workday to which an employee is exposed.

H. High Efficiency Particulate Air (HEPA) Filter Equipment
HEPA filtered vacuuming equipment with a UL 586 filter system capable of collecting and retaining lead-contaminated paint dust. A high efficiency particulate filter means 99.97 percent efficient against 0.3 micron size particles.

I. Lead Control Area
A work area within which engineering controls are implemented to prevent the spread of lead dust, paint chips or debris from lead-containing paint removal operations. The lead control area is isolated by physical boundaries to prevent entry of unauthorized personnel.

J. Lead Permissible Exposure Limit (PEL)
Fifty (50) micrograms per cubic meter of air as an 8-hour time weighted average as determined by 29 CFR Part 1926.62. If an employee is exposed for more than 8 hours in a work day, the PEL shall be determined by the following formula:

PEL (micrograms/cubic meter of air) = 400/No. hrs worked per day

K. Personal Monitoring
Sampling of lead concentrations within the breathing zone of an employee to determine the 8-hour time weighted average concentration in accordance with 29 CFR Part 1926.62. Samples shall be representative of the employees work tasks. Breathing zone shall be considered an area within a hemisphere, forward of the shoulders with a radius of 6 to 9 inches and the center at the nose or mouth.

L. Wipe Sampling
Clearance testing procedures, which determine the amount of existing lead-based paint surface dust by atomic absorption spectroscopy analysis, or inductively coupled plasma emission spectrometry expressed in micrograms of lead.

1.4 QUALITY ASSURANCE

A. Qualifications

1. Contractor: Certification that the Contractor has prior experience on LBP activity projects similar in nature and extent to ensure the capability to perform the required work procedures in a satisfactory manner.

2. Competent Person: Certification that the Contractor's full-time onsite Competent Person meets the competent person requirements of 29 CFR Part 1926.62 and is experienced in administration and supervision of LBP activity projects, including work practices, protective measures for building and personnel, disposal procedures, etc. This person shall have completed a Contractor Supervisor LBP abatement course by an EPA Training Center or an equivalent certification course, and have had a minimum of 2 years on-the-job experience.

3. Testing Laboratory: The name, address, and telephone number of the independent testing laboratory selected to perform sampling and analysis for personal and area air samples and wipe samples, and TCLP analysis of LBP wastes and debris. Documentation that the laboratory performing the analysis is an EPA National Lead Laboratory Accreditation Program (NLLAP) accredited laboratory and that it is listed proficient in the NIOSH/EPA Environmental Lead Proficiency Analytical Testing Program (ELPAT), and a New York State Department of Health (NYSDOH) Environmental Laboratory Approval Program (ELAP) certified laboratory. Certification shall include accreditation for heavy metal analysis, list of experience relevant to analysis of lead in air, and a Quality Assurance and Quality Control Program. Currently, the American Association for Laboratory Accreditation (ASLA) and the American Industrial Hygiene Association (AIHA) are the EPA recognized laboratory accreditors. Documentation shall include the date of accreditation or reaccreditation.

4. Blood Lead Testing Laboratory: The name, address and telephone number of the blood lead testing laboratory; the laboratory's listing by OSHA and the U.S. Public Health Service Center for Disease Control (CDC); and documentation that the laboratory certified in the state where the work site is located.

B. Respiratory Protection Devices
Manufacturer's certification of NIOSH for respiratory protection devices utilized on the site.

C. Cartridges, Filters, and Vacuum Systems
Manufacturer's certification of NIOSH approval of respirator cartridges (organic vapor, acid gas, mist, dust, high efficiency particulate); High Efficiency Particulate Air (HEPA) filtration capabilities for all cartridges, filters, and HEPA vacuum systems.

D. Medical Examination and Records
Certification that employees who are involved in LBP abatement work have received medical examinations and will receive continued medical surveillance, including biological monitoring, as required by 29 CFR Part 1926.62, 29 CFR Part 910.1200, 29 CFR Part 1910.120 and by the state and local regulations pertaining to such work. Records shall be retained, at Contractor expense, in accordance with 29 CFR Part 1910.20.

1. Provide medical surveillance to workers until exposure monitoring reveals that workers are not exposed on any day of the job to airborne lead at or above the Action Level of 30 ug/dL of blood. This consists of a blood test measuring the level of lead and zinc protoporphyrin by a licensed physician. Further testing and medical exams may be necessary depending on the results of initial blood tests and/or the initial exposure assessment.

E. Training
Training certification shall be provided prior to the start of work involving LBP abatement, for all of the Contractors' workers, supervisors and Competent Person. Training shall meet the requirements of 29 CFR Part 1926.62, 29 CFR Part 1926.59, 29 CFR Part 1910.1200, 29 CFR Part 1910.120 and 49 CFR 172, and that required by EPA or the state LBP course for the

work to be performed. Training shall be provided prior to the time of job assignment and, at least, annually. The project specific training shall. at a minimum, include the following.

1. Specific nature of the operation, which could result in exposure to lead.

2. Purpose, proper selection, fitting, use and limitations of respirators.

Purpose and description of the medical surveillance program and the medical removal protection program, including information concerning the adverse health effects associated with excessive exposure to lead (with particular attention to the adverse reproductive effects on both males and females and hazards to the fetus and additional precautions for employees who are pregnant.)

3. Relevant engineering controls and good work practices.

4. The contents of any compliance plan in effect.

5. Instructions to employees that chelating agents should not routinely be used to remove lead from their bodies and should not be used at all except under the direction of a licensed physician.

6. The employee's right of access to records under 29 CFR part 1910.20.

F. Respiratory Protection Program

1. Furnish each employee required to wear a negative pressure respirator or other appropriate type with a respirator fit test at the time of initial fitting and at least every 12 months thereafter as required by 29 CFR Part1910.134 and 29 CFR Part 1926.62.

2. Establish and implement a respiratory protection program as required by ANSI Z88.2, 29 CFR Part 1910.134 and 29 CFR Part 1926.62.

3. All workers are required to don an appropriate level of protection commensurate with the airborne concentrations of lead in which they are working. The level of protection will be determined by the Contractor, based on objective air monitoring data.

G. Licenses and Permits

Copies of licenses and permits as required by applicable Federal, state and local regulations shall be obtained before the start of the LBP project.

1.5 SUBMITTALS

A. The submittals shall be submitted in accordance with Specification Section 01300, Submittals.

B. Certifications

Prior to the start of work, submit required certifications, plans, programs, permits and licenses identified in Paragraph 1.5 of this specification section.

C. Equipment List

Prior to the start of work submit list of equipment items to be used in the work, including brand names, model, capacity, performance characteristics, quantities and other pertinent information.

D. Lead-Based Paint (LBP) Management Plan

The contractor shall prepare a detailed LBP Management Plan that identifies the work procedures, health and safety measures to be used in LBP work procedures; and that addresses spill prevention, containment and emergency response procedures. The plan shall address the methods to be undertaken to abate the lead to include the following key elements:

1. LBP containment methods to control employee exposure to lead at or below the permissible exposure limit and to ensure that airborne lead concentrations of 30 micrograms per cubic meter of air are not exceeded outside of the lead control area.
2. Training requirements as required by Federal, state and local regulations.
3. Unique problems associated with the LBP project.
4. Sketch of location, size and details of LBP control areas, decontamination rooms/areas, change rooms and shower facilities.
5. Eating, drinking, smoking, and rest room procedures.
6. Sequencing of LBP related work.
7. Personnel protective equipment and respiratory protection program, including controls.
8. Engineering controls, containment structures and safety measures.
9. Worker exposure assessment procedures.
10. Work Practice controls.
11. Housekeeping.
12. Hygiene facilities and practice.
13. Medical surveillance, including medical removal procedures.
14. Sampling, testing and analytical methods to include personnel air sampling requirements of 29 CFR Part 1926.62, wipe sampling of the surface where the LBP was removed and, when required, toxicity characteristic leaching procedure (TCLP) testing of the waste material in accordance with 40 CFR 261 and 6 NYCRR Part 371, and area air sampling required by the specifications. Procedures must include frequency, locations, sampling and analytical methods to be used.

E. Compliance Program
Contractor's Compliance Program prepared in accordance with 29 CFR Part 1926.62 (e) (2).

F. Waste Transporter and Disposal Facility Permits, and Disposal Documents.

1. Name, address and telephone number of 6 NYCRR Part 364 transporter who will be transporting the LBP wastes and debris and a copy of the transporter's 6 NYCRR Part 364 permit.
2. Name, address and telephone number of disposal facility accepting the LBP wastes and debris and a copy of the permit from the disposal facility documenting the facility is permitted to accept the wastes being delivered.
3. Copy of completed waste characterization (waste profile) forms for obtaining approval to dispose of the LBP wastes and liquid wastes at the disposal facility.

4. Copy of the approved waste characterization (waste profile) forms from the disposal facility indicating they are permitted to accept the wastes and will accept the wastes being delivered.

5. Example of completed transportation and disposal documents (i.e., bill of lading or hazardous waste manifest and land disposal restriction notification forms, as applicable) prior to shipment of wastes.

6. Copy of the completed and signed transportation and disposal documents at time of shipment for the disposal of LBP wastes and debris, liquid wastes and any other wastes generated, and copy signed by the disposal facility.

7. Copy of certificate of destruction for incinerated wastes, certificate of treatment and/or certificate of disposal, as applicable and associated tracking documents from the final disposal facility for disposal of the LBP wastes and debris.

G. Health and Safety Plan And Confined Space Entry Program
Contractor's written site specific Health and Safety Plan prepared in accordance with 29 CFR Part 1910.120 and Contractor's confined space entry program prepared in accordance with 29 CFR Part 1910.146. These documents are requested for information only and as documentation that they exist.

H. Sampling and Laboratory Analysis Reports
Submit field sampling logs for all personal and area air samples, wipe samples and waste samples taken, and submit copy of laboratory analysis reports and chain of custody records for all sample analysis.

I. Competent person certification per Section 3.5.B.

1.6 POSTED WARNINGS & NOTICES

The following regulations, warnings and notices shall be posted at the work site in accordance with 29 CFR Part 1926.62.

A. Regulations
A copy of applicable Federal, state, and local regulations shall be maintained at the work site.

B. Warning Signs
Warning signs shall be provided at approaches to LBP control areas. Signs shall be located at a distance from the LBP control areas that will allow personnel to read the sign and take the necessary protective actions required before entering the LBP control area. The signs shall comply with the requirements of 29 CFR Part 1926.62.

C. Worker Information
Right-to-know notices shall be placed in clearly visible areas of the work site in compliance with Federal, State and Local regulations.

D. Air Monitoring Results
Daily air monitoring results shall be prepared in order to be easily understood by the workers and shall be placed in a clearly visible area of the work site.

E. Emergency Telephone Numbers
A list of telephone numbers shall be posted at the site. The list shall include numbers of the local hospital, emergency squad, police and fire departments, Government and Contractor

representatives who can be reached 24 hours per day and professional consultants directly involved in the project.

1.7 EQUIPMENT & MATERIALS

Sufficient quantities of health and safety materials required by 29 CFR Part 1926.62, and other materials and equipment needed to complete the project, shall be available and kept on the site.

A. Respirators
Air-purifying respirators shall be approved by NIOSH for use with dust, fumes and mists having permissible exposure limits less than 0.05 milligrams per cubic meter (i.e., have high-efficiency particulate air (HEPA) filters) and for other hazardous airborne contaminants that may be encountered, as determined by the Competent Person. The Contractor shall furnish, at no cost to personnel/employee, respirators to provide protection from airborne concentrations of lead. Respirators shall comply with the requirements of 29 CFR Part 1926.62 and shall be used in accordance with 29 CFR Part 1926.62, 29 CFR Part 1926.103 and 29 CFR Part 1910.134.

B. Respirator Cartridges
A sufficient supply of respirator cartridges shall be maintained at the work site to provide new cartridges to employees and authorized visitors, throughout the duration of the project. Cartridges shall be replaced according to the manufacturer's recommendations, when breathing becomes difficult, or if the cartridge becomes wet.

C. Protective Clothing

1. The Contractor shall furnish, at no cost to personnel/employee, equipment/ clothing for protection from airborne and waterborne LBP debris. An adequate supply of these items shall be available for worker and authorized visitor use. Workers and visitors shall not take protective clothing and equipment off the work site at any time. Protective clothing includes:

   a. Coveralls (Whole Body Protective Coverings): Full-body coveralls and head covers shall be worn by workers in the work area as necessary. Sleeves shall be secured at the wrist and pants legs at the ankle with tape. Permeable clothing shall be provided in heat-stress conditions. Where non-disposable coveralls are provided, these coveralls shall be cleaned after each wearing. Cleaning of coveralls and other non-disposable clothing shall be in accordance with the provisions for cleaning in 29 CFR Part 1926.62.

   b. Boots: Work boots with nonskid soles or impermeable work boot covers shall be worn by workers. Where required by OSHA, safety boots (steel toe or steel toe and shank) shall be worn. Paint the uppers of boots red with waterproof enamel. Do not allow boots to be removed from the work area for any reason after being contaminated with LBP debris. Dispose of boots as LBP contaminated waste at the end of the work.

   c. Gloves: Inner gloves, appropriate for items and hazards encountered and disposable outer work gloves shall be provided to each worker and shall be worn while the worker is in the work area. Glove material shall be appropriate for the specific chemical exposure. Gloves shall not be removed from the work area and shall be disposed of as LBP contaminated waste at the end of the work.

d. Hard Hats: Head protection (hard hats) shall be provided as required by OSHA for workers and authorized visitors. Protective plastic-strap suspension hats shall be used. Hard hats shall be worn at all times that work is in progress. Hats shall remain in the work area until the project is completed. Hats shall be thoroughly cleaned, decontaminated and bagged before being removed from the work area at the end of the project.

e. Eye Protection: Fog-proof goggles for personnel engaged in LBP operations shall be worn when the use of a full-face piece respirator is not required.

D. Negative Air Pressure System

When a LBP control area requires the use of an airtight containment barrier, a negative air pressure system shall be used and pressure differential recordings taken. LBP shall not be removed from the LBP control area until the proper engineer controls and HEPA filtration systems are in place.

1. HEPA Filter Requirements

The negative air pressure system shall be equipped with approved HEPA filters per UL 586. Negative air pressure equipment shall be equipped with new HEPA filters, and shall be sufficient to maintain a minimum pressure differential of minus 5 Pa (0.02 inch) of water column relative to adjacent, unsealed areas. Negative air pressure system minimum requirements are listed below.

a. The unit shall be capable of delivering its rated volume of air with a clean first stage filter, an intermediate filter and a primary HEPA filter in place.

b. The HEPA filter shall be certified as being capable of removing particles as small as 0.3 micrometers at a minimum efficiency of 99.97 percent.

c. The unit shall be capable of continuing to deliver no less than 70 percent of rated capacity when the HEPA filter is 70 percent full or measures 620 Pa (2.5 inches of water) static pressure differential on a magnehelic gauge.

d. The unit shall be equipped with a manometer-type negative pressure differential monitor with minor scale division of 0.02 inch of water and accuracy within plus or minus 1.0 percent. The manometer shall be calibrated daily as recommended by the manufacturer. Record manually manometer readings of the pressure differential between the LBP control area and adjacent unsealed areas at the beginning of each workday and every 2 working hours thereafter.

e. The unit shall be equipped with a means for the operator to easily interpret the readings in terms of the volumetric flow rate of air per minute moving through the machine at any given moment.

f. The unit shall be equipped with an electronic mechanism that automatically shuts the machine off in the event of a filter breech or absence of a filter.

g. The unit shall be equipped with an audible horn that sounds an alarm when the machine has shut itself off.

h. The unit shall be equipped with an automatic safety mechanism that prevents a worker from improperly inserting the main HEPA filter.

i. The unit shall be ducted through the containment barrier wall to the outside of the work area. The unit shall not be exhausted into any work area.

2. Number of Units Required
The air within the containment barrier shall be changed at least once every 15 minutes by a continuously operating negative air pressure system, until the LBP control area barrier is removed. Filters shall be replaced as necessary to maintain the efficiency of the system. A back-up unit shall be maintained onsite.

3. Auxiliary Generator
An auxiliary generator shall be provided with a capacity adequate to power a minimum of 50 percent of the negative air machines at any time during the work. When power fails, the generator controls shall automatically start the generator and switch the negative air machine to generator power. The generator shall not present a carbon monoxide hazard to workers.

4. Discontinuing Negative Air Pressure System
The negative air pressure system shall not be shut down during LBP work unless authorized by the Owner's Consultant. At the completion of the LBP work procedures and disposal project, units shall be run until full cleanup has been completed and wipe clearance samples have been collected, analyzed and have passed final clearance testing requirements. Dismantling of the negative air pressure systems shall conform to the written decontamination procedures. Prefilters shall be removed and properly disposed. The intake to the machines shall be sealed with polyethylene to prevent environmental contamination.

E. Expendable Supplies

1. Polyethylene Sheet and Bags - General
Polyethylene sheet and bags shall be minimum 6-mil thick. Bags shall have pre-printed labels, and 5-inch (minimum) long plastic ties, pointed and looped to secure the filled bags. Polyethylene sheets shall be in roll sizes to minimize seams.

2. Polyethylene Sheet - Flame Resistant
Where a potential for fire exists, flame-resistant polyethylene sheets shall be provided. Polyethylene film shall conform to the requirements of NFPA 701.

3. Polyethylene Sheet - Reinforced
Reinforced polyethylene sheet shall be provided where high skin strength is required such as where it constitutes the only barrier between the LBP control area and the outdoor environment. The sheet stock shall consist of translucent, nylon-reinforced or woven-polyethylene thread laminated between two layers of polyethylene film. Film shall meet flame resistant standards of NFPA 701.

4. Tape and Adhesive Spray
Tape and adhesive shall be capable of sealing joints between polyethylene sheets and for attachment of polyethylene sheets to adjacent surfaces. After dry application, tape or adhesive shall retain adhesion when exposed to wet conditions, including amended water. Tape shall be minimum 2 inches wide, industrial strength.

5. Containers
DOT approved impermeable containers shall be used to receive and retain LBP waste and debris, and lead contaminated material until disposal. Containers shall be labeled in accordance with EPA, DOT and OSHA standards.

6. Chemicals

Chemicals, including caustics and paint strippers, shall be properly labeled and stored in leak-tight containers.

F. Vacuum Systems
HEPA filtered vacuum systems shall be used during LBP operations which generate dust. The systems shall be suitably sized for the project, and filters shall be capable of removing particles as small as 0.3 micrometers at a minimum efficiency of 99.97 percent.

G. Heat Blower Guns
Heat blower guns shall be flameless, electrical, paint-softener type with controls to limit temperature to 590 degrees C (1,100 degrees F). Heat blower shall be DI (non-grounded) 120 Vac, and shall be equipped with cone, fan, glass protector and spoon reflector nozzles.

H. Chemical Paint Strippers
Chemical paint strippers shall contain no methylene chloride.

I. Chemical Paint Stripper Neutralizer
Neutralizers for paint strippers shall be compatible with the substrate and suitable for use with the chemical stripper that has been applied to the surface.

1.8 STORAGE OF MATERIALS

Materials shall be stored in a place and manner, which protects them from damage and contamination. During periods of cold weather, plastic materials shall be protected from the cold. Regularly inspect materials to identify damaged or deteriorating items. Damaged or deteriorated items shall not be used and shall be removed from the site as soon as they are discovered. Stored materials shall not present a hazard or an inconvenience to workers, visitors and/or other employees.

PART 2 – PRODUCTS

(NOT APPLICABLE)

PART 3 – EXECUTION

3.1 WORK PROCEDURES

LBP work procedures and related work shall be performed in accordance with the U.S. Department of Housing and Urban Development "Guidelines for the Evaluation and Control of Lead-Based Paint Hazards in Housing" and the accepted Contractor's LBP Management Plan. Procedures and equipment required to limit occupational and environmental exposures to lead during LBP removal shall be in accordance with 29 CFR Part 1926.62 and as specified herein. LBP waste and debris, lead contaminated debris and personal protective clothing and equipment shall be disposed of in compliance with Federal, state, and local regulations.

A. Personnel Protection Procedures
Personnel shall wear and use protective clothing and equipment as specified and required by 29 CFR Part 1926.62 and 29 CFR Part 1910.120. Eating, smoking, drinking, chewing tobacco and chewing gum, and applying makeup shall not be permitted in the LBP control area. Personnel of trades not engaged in the LBP work procedures and disposal of LBP shall not be exposed at any time to airborne concentrations of lead equal to or in excess of 30 micrograms per cubic meter of air. Electrical service shall be disconnected when wet removal is performed,

and temporary electrical service protected by a ground fault circuit interrupter shall be provided.

B. Safety and Health Procedures

The Competent Person shall be present on the work site throughout the LBP project to supervise, monitor and document the project's health and safety provisions. A daily log shall be maintained showing the results of sampling tests throughout the project area. LBP work being conducted within a LBP Control area where an airtight barrier is required shall be stopped if measured airborne lead concentrations, collected during LBP work procedures, exceed the pre- LBP work procedures airborne concentration levels.

C. Safety and Health Responsibilities

The Competent Person shall:

1. Verify that training meets applicable requirements.

2. Review and approve LBP Management Plan for conformance to the applicable referenced standards.

3. Inspect LBP removal work for conformance with the accepted LBP Management Plan.

4. Ensure that worker exposure air monitoring activities are in accordance with 29 CFR Part 1926.62.

5. Ensure work is performed in strict accordance with specifications.

6. Ensure hazardous exposure to personnel and to the environment are adequately controlled.

7. The Contractor's Competent Person shall be responsible for directing personal air monitoring.

8. The Owner's Consultant shall be responsible for directing area and final air/wipe testing.

D. Medical Surveillance Procedures

Medical surveillance shall be implemented in accordance with the accepted Contractor's LBP Management Plan, and shall comply with the requirements of 29 CFR Part 1926.62, including the provisions for biological monitoring, medical removal, protection and a physician's written opinion, signed by the physician performing the employee examination. The Contractor shall provide a copy of the written opinion for Contractor's employees prior to each employee's commencement of work.

E. Engineering Controls and Containment Structures

Engineering and work practice controls are the primary means of maintaining exposures to lead below the PEL. Paint removal and surface preparation activities must keep dust levels at a minimum. Torch cutting of surfaces with LBP will require appropriate personal protective equipment and exposure controls. Power tools must be equipped with vacuum shrouds including a high efficiency particulate air filtered vacuum system attached.

1. LBP Control Area

The LBP control area is where LBP work procedures occur and as such shall be considered contaminated. The LBP control area shall be isolated to prevent LBP containing dust or debris from passing into adjacent open areas. The control area shall be decontaminated at the completion of the LBP work procedure and disposal work.

2. Boundary Requirements.
Physical boundaries shall be provided around exterior LBP control areas by roping off the area indicated in the LBP Management Plan.

3. Control Barriers
The LBP control area shall be designated and separated from other outside areas with control barriers. The polyethylene sheeting shall have all openings masked and sealed. The LBP control area shall be erected according to the Contractors LBP Management Plan. Polyethylene sheeting shall be mechanically supported, independent of duct tape or spray adhesive.

4. Masking and Sealing

   a. Exterior LBP control area requirements: Where the construction of a contained LBP control area is impractical or not required based on the method of lead work procedures, a roped-off perimeter shall be installed 20 feet from and around the area where the LBP handling procedures are performed and other requirements for LBP control areas shall be maintained. Personal monitoring of airborne concentrations shall be conducted in adjacent areas during the work shift, in accordance with 29 CFR Part 1926.62. Area air monitoring inside and outside of the roped-off perimeter shall be conducted as specified. Airborne concentrations shall not exceed specified levels.

5. Personnel Decontamination Unit
Personnel decontamination units shall be provided when required for the LBP procedures. Materials fabricated or delivered to the site before the shop drawings have been returned to the Contractor will be subject to rejection by the Owner's Consultant. Specifications and drawings of portable prefab units, such as a trailer unit, if utilized, must be submitted for review and approval before start of construction. Submittal shall include, but not be limited to, a floor plan layout showing dimensions, materials, sizes, thickness, plumbing, and electrical outlets. Access between contaminated and uncontaminated areas shall be through an airlock. Access between any two rooms or room and trailer within the decontamination unit shall be through a plastic sheeting curtained doorway. A separate equipment decontamination unit shall be provided. Each work area shall have an emergency exit. The personnel decontamination unit's clean room shall be the only means of entrance and exit, except for emergencies, from the LBP control area. Materials shall exit the LBP control area through the equipment decontamination area.

6. Clean Room
The clean room shall have only one exit to non-contaminated areas of the site. An airtight seal shall be constructed of polyethylene between the clean room and uncontaminated areas. Surfaces of the clean room shall be protected with sheet polyethylene. A temporary unit with a separate equipment decontamination locker room and a clean locker room shall be provided for personnel who are required to wear whole body protective clothing. One locker shall be provided in each locker room for each LBP worker, and each Contractor's representative. Lead-free personal clothing and shoes shall be kept in the clean locker. Hand wash station/showers shall be located between the equipment decontamination locker room and the clean locker room, and

employees shall wash or shower before changing into personal clothes. An adequate supply of clean disposable towels shall be provided. LBP contaminated work clothing shall be cleaned. Clean rooms shall be physically attached to the LBP control area for areas inside the building but may be directly adjacent to the LBP control area outside of the building. Joint use of this space for other functions, such as offices, equipment storage, etc., is prohibited.

7. Hand Wash Station/Shower Room
An operational shower and hand washing station shall be provided between the work area and the clean changing room. Workers shall wash and/or shower before entering the clean changing room. Shower room shall be separated from other rooms by air-tight walls fabricated from polyethylene sheeting. Water shall be hot and cold or warm. Shower heads/ controls, soap dish, continuing supply of soap, and clean towels shall be provided. The shower shall be maintained in a sanitary condition. Waste water shall be pumped to drain and through waste water filters that meet state and/or local requirements. These filters shall be located inside the shower unit and filters shall be changed regularly. Spent filters shall be discarded as LBP contaminated waste.

8. Equipment Decontamination
The Equipment Decontamination Unit shall be used for removal of equipment and materials from the LBP control area, and shall include a wash room, holding room, and an enclosed walkway. The unit shall be constructed from wood framing material and polyethylene sheeting. Workers shall not enter or exit the LBP control area through the Equipment Decontamination Unit. A washdown station, consisting of an enclosed shower unit, shall be located in the work area outside the Wash Room. The washdown station shall be used to clean equipment, bags and containers. Bagged or containerized LBP wastes shall be passed from the work area and cleaned in the Wash Room. The Wash Room shall be separated from the work area by a polyethylene sheet flap. Wastewater shall be filtered and filters shall be changed as required for the shower unit and the Wash Room. Filters shall be disposed of as LBP contaminated wastes. The Holding Room shall be used as a drop location for bagged LBP passed from the Wash Room. This room shall be constructed so that bagged materials cannot be passed from the Wash Room through the Holding Room to the enclosed walkway. The walkway shall provide access to the Holding Room from outside the work area. The enclosed walkway shall be separated from the exterior by a single flap of polyethylene sheeting. The Contractor's equipment used for LBP work procedures shall be decontaminated prior to its removal outside of the lead control area. The decontamination water shall be containerized, the containers labeled, the liquid sampled and analyzed in the laboratory for lead, and properly disposed of off-site according to applicable Federal, State and Local regulations. See Paragraph 3.5.C.2.

9. Maintenance of Decontamination Units
Barriers and polyethylene sheeting shall be effectively sealed and taped. Containment barriers shall be visually inspected at the beginning of each work period. Damaged barriers and defects shall be immediately repaired upon discovery. Smoke testing methods shall be used to test effectiveness of barriers when directed by the Owner's Consultant.

10. LBP Control Area Exiting Procedures
Personnel exiting a LBP control area shall perform the following procedures and shall not leave the work place wearing any clothing or equipment worn during the work day:

a. HEPA vacuum all protective clothing before removing.

b. Remove protective clothing in the decontamination room and place this clothing in an approved impermeable disposal bag.

c. Wash or shower.

d. Change to clean clothes prior to leaving the physical boundary designated around the lead-contaminated work site.

F. Temporary Utilities

1. Temporary equipment as necessary to provide adequate power, light, heat, and water shall be installed, as needed, to accomplish the LBP operations properly and safely. The Contractor shall maintain the security and maintenance of the utility system in the LBP control areas. In the event of a failure of any utility system, the Owner will not be responsible for any loss of time or other expense incurred by the Contractor. In addition to any site-specific temporary utility requirements, the Contractor shall provide:

a. Back-flow protection on all water connections is required. Fittings installed by the Contractor shall be removed after completion of work with no damage or alteration to existing water piping and equipment.

b. When applicable, heavy-duty abrasion-resistant hoses to provide water to each work area and decontamination area.

c. A hot water heater, if necessary, to provide warm water to the decontamination showers.

d. Electrical service to work areas. Electrical service shall comply with National Electric Code, State and Local requirements and UL standards. Warning signs shall be posted at power outlets, which are other than 110-120 volt power. Only grounded extension cords shall be used. Incandescent lamps and light fixtures shall be of adequate wattage to provide good illumination in LBP control areas.

e. Temporary heating units, when needed, that have been tested and labeled by UL, FM, or another recognized trade association related to the fuel being consumed. Forced air or fan type units shall not be utilized inside a work area. Units shall have tip-over protection.

f. Sufficient quantity of single-occupant, self-contained chemical toilets, properly vented and fully enclosed.

3.2 LEAD-BASED PAINT WORK PRACTICES (Use methods as applicable)

A. Component Removal:

Components shall be removed intact to the extent practicable. A 6-mil polyethylene drop cloth shall be placed on either side of the component, prior to its removal, to catch any paint chips that may become dislodged. The component shall be wrapped in a layer of 6-mil polyethylene for movement to the disposal container. Follow proper disposal requirements. The area around the component removal shall be wet wiped and HEPA vacuumed, including the tent enclosure. The polyethylene sheeting shall be carefully folded in on itself and placed in a 6-mil disposal bag. Containment debris shall be properly disposed of as lead-based waste.

Clearance will be performed as follows:

1. Visual Clearance - Determine that all required work has been completed.
Look for settled dust, paint chips or debris in work area. If located, cleanings will commence until visual inspection locates no evidence of dust.

2. The Owner's Consultant shall perform Dust and/or Soil Sampling as outlined in the U.S. Department of Housing and Urban Development "Guidelines for the Evaluation and Control of Lead-Based Paint Hazards in Housing".

B. Chemical Stripping: Assumed Exposure (50 ug/m^3 - 500 ug/m^3)

Chemical stripping, using an agent approved by the Owner's Consultant, followed by wet scraping is the preferred method of abatement for areas where torch cutting, welding and/or other hot-work will affect building components coated with lead-based paint or lead containing coatings. The specific stripping agent(s) proposed must be approved by the Owner. No chemical strippers containing methylene chloride shall be used by the Contractor on this project.

1. Horizontal surfaces directly below and at least 10' in a radial direction from the area where chemical stripping is to be performed shall be protected with 6-mil poly.

2. All LBP on specified surfaces shall be removed to the bare substrate. The job is not considered complete until the substrate is dry and free of paint, debris, and LBP residue.

3. LBP stripping agents shall be brushed or troweled on the designated surfaces, or otherwise applied in accordance with manufacturer's specifications. The minimum thickness of chemical stripping agent applied shall be 0.125 (1/8) inches or the manufacturer's recommendations.

4. Stripping agents shall not be applied to, nor be allowed to inadvertently penetrate, wood and/or other porous substrates.

5. The required dwell time for stripping will depend upon the ambient temperature, humidity, and thickness of LBP. If LBP is not completely removed following the initial application of stripper, a second application and wet scraping may be required.

6. Removed LBP shall not be deposited on the polyethylene containment surfaces but shall be transferred directly into 6-mil polyethylene bags from the scraper. LBP shall be removed by wet scraping to the maximum extent feasible.

7. Any residue not removable by wet scraping shall be washed down to the bare metal substrate with a high-phosphate solution. LBP-contaminated wastewater shall be kept to a minimum using wet scrub brushes or sponges. These residues and disposable cleaning media shall also be directly transferred to the 6-mil polyethylene bags containing other LBP wastes. Free standing water shall be eliminated by use of a drying agent.

8. Clearance will be performed as follows:

   a. Visual Clearance - Determine that all required work has been completed.
      Look for settled dust, paint chips or debris in work area. If located, cleanings will commence until visual inspection locates no evidence of dust.

b. The Owner's Consultant shall perform Dust and/or Soil Sampling as outlined in the U.S. Department of Housing and Urban Development "Guidelines for the Evaluation and Control of Lead-Based Paint Hazards in Housing".

C. Manual Demolition/Scraping/Cleaning: Assumed Exposure (50 ug/m^3 - 500 ug/m^3)

Manual demolition, scraping, manual sanding and power tool cleaning with dust collection systems shall be performed in conjunction with engineering and work practice controls meeting the requirements of 29 CFR 1926.62(e)(1).

Seal openings of HVAC ductwork and other penetrations (doors, windows, etc.) within the Control Area with two layers of 6-mil polyethylene sheeting. For work on vertical surfaces, place a layer of 6-mil polyethylene sheeting below the area prior to manual demolition/scraping/ cleaning. The sheeting shall extend 5 ft. on either side of the work area, to catch any paint chips that may become dislodged.

Wet methods shall be used during manual scraping, manual sanding and power tool cleaning with dust collection systems. Local HEPA ventilation shall be utilized in conjunction with manual scraping, manual sanding and power tool cleaning with dust collection systems. In the case that local HEPA ventilation is not sufficient to control dust hazards, the Contractor shall be required to install engineering controls to meet requirements of Specification Section 1.8(D) "Negative Air Pressure System".

Removed LBP shall not be allowed to accumulate on surfaces within the Control Area, but shall be HEPA vacuumed or placed directly into 6-mil polyethylene bags. The Contractor shall maintain all surfaces as free as practicable of accumulated lead dust to prevent the dispersal of lead into the work place. LBP shall be removed by manual methods to the maximum extent feasible.

Debris shall be bagged in 6-mil polyethylene bags and secured in leak proof drums until TCLP testing is completed. Follow proper disposal requirements. The area around the surfaces subject to work shall be wet wiped and HEPA vacuumed, including the polyethylene sheeting. Upon clearance by the Owner's Consultant, the polyethylene sheeting shall be carefully folded in on itself and placed in a 6mil disposal bag. Containment debris shall be properly disposed of as lead-based waste.

Clearance will be performed as follows and as needed:

a. Visual Clearance – determine that all required work has been completed. Look for settled dust, paint chips or debris in work area. If located, cleanings will commence until visual inspection locates no evidence of dust.

D. Alternative Lead Work Procedures

1. Any Work Procedure other than the outline procedures above, shall be submitted to the Owner's Consultant for approval prior to the start of the project. As there are many different components in differing areas of the building(s), it is impractical to address every potential lead work procedure. The intent of alternative lead work procedures shall be to maintain

compliance with 29 CFR 1926.62 and maintain airborne concentrations of lead dust below the Action Level of 30 ug/dL of air.

3.3 MONITORING & CLEARANCE SAMPLING

During the entire LBP removal and disposal operations, the Owner's Consultant shall be on-site directing the monitoring/sampling and inspecting the work to ensure that the health and safety requirements of this contract are satisfied.

A. Personnel Air Monitoring (Provided by the Contractor, as necessary)

1. Personnel air monitoring samples for airborne concentrations of lead shall be collected and analyzed in accordance with 29 CFR Part 1926.62. Results shall be reported in micrograms per cubic meter of air. The Competent Person shall use personal air monitoring results to determine the effectiveness of engineering controls, the adequacy of PPE and to determine if proper work practices are being employed. The Owner's Consultant shall be notified if any personal air monitoring result equals or exceeds 30 micrograms per cubic meter of air. The Contractor shall take steps to reduce the concentration of lead in the air.

B. Area Air Monitoring (Provided by the Owner's Consultant, as requested)
Airborne concentrations of lead shall be collected and analyzed in the laboratory. Results shall be reported in micrograms per cubic meter of air.

1. Pre-LBP work
Pre- LBP work samples shall be collected in the following locations: I) inside the lead control area, one upwind of the LBP work and two downwind of the LBP work procedure activities; and 2) outside the physical boundary (roped off) area, one upwind of the LBP work and two downwind of the LBP work activities. A total of six (6) samples. If work is performed inside the building, similar numbers of samples are to be positioned inside and outside the LBP containment area.

2. LBP Work
The Competent Person shall collect area air samples on a daily basis during the duration of the LBP work. The samples shall be collected in the same location as the pre-work samples.

3. The area air samples shall be collected at 4 to 6 feet above grade, and using high volume air samplers.

4. The air samples shall be analyzed by NIOSH Method 7082 or method approved by Engineer.

5. Results
The Contractor shall have the results of the area air monitoring within 24 hours after completion of the sampling. Results shall be reported in micrograms per cubic meter of air.

6. Excessive Levels

Outdoor LBP work shall cease and the Owner's Consultant notified if measured airborne lead concentrations, collected during LBP activities, exceed the pre-work airborne concentration levels. The Contractor may be required to clean and re-sample the affected area, at no additional cost to the Owner, if directed by the Owner's Consultant. The Contractor shall correct the work practices and/or engineering controls and shall resume LBP work procedures at the direction of the Owner's Consultant.

3.4 ADJACENT AREAS

Damage to adjacent areas shall be repaired to the approval of the Owner.

3.5 CLEAN-UP & DISPOSAL

A. Cleanup

1. Daily
   Surfaces in the LBP control area shall be maintained free of accumulations of paint chips, LBP debris, blasting debris and dust. Spread of dust and debris shall be restricted; waste shall not be distributed over the work area. Dry sweep or compressed air shall not be used for cleanup. At the end of each shift, the area shall be cleaned of visible lead paint contamination by vacuuming with a HEPA filtered vacuum cleaner and wet wiping the area. LBP work procedures work shall cease during the cleanup.

2. At Completion of LBP work Procedure and a satisfactory visual inspection by the Engineer, a clean-up shall be performed by the Contractor. This clean-up includes removal of any contaminated material, equipment or debris including polyethylene sheeting from the work area. The polyethylene sheeting shall be sprayed or misted with water for dust control, construction debris removed and then the sheeting removed by folding it in upon itself.
   a. Lead-contaminated debris shall be containerized in accordance with paragraph 3.5.C.1, LBP Wastes and Lead-Contaminated Wastes. Waste bags shall not be overloaded, shall be securely sealed and stored in the designated area until disposal.

   b. Removal of surface polyethylene sheeting shall begin from top to bottom. Removal of floor polyethylene sheeting shall begin at the corners and folded in the middle to contain the dust. Polyethylene shall be disposed of as specified in Paragraph 3.5.C.l

   c. Cleaning Equipment. The Contractor shall decontaminate the lead abatement equipment and equipment used in the work area. The wastewater from cleaning shall be contained, sampled and disposed of as specified in Paragraph 3.5.C.2.

B. Certification
   The Contractor shall certify in writing that the inside and outside the lead control area air monitoring samples are less than 30 micrograms per cubic meter of air, the respiratory protection for the employees was adequate, the work procedures were performed in accordance with 29 CFR Part 1926.62 and that there was no visible accumulations of lead-based paint and dust on the worksite. Do not remove warning signs at the lead control area or roped-off boundary signs prior to the Owner's Consultant's receipt of the Contractor's certification. Re-clean areas showing dust, residual paint chips. LBP debris and blasting debris.

Waste Storage, Sampling/Analysis and Disposal (Provided by the Contractor)

1. LBP Wastes and Lead-Contaminated Water

LBP waste, and lead-contaminated waste and debris shall be stored sampled and analyzed and disposed of as follows.

a. The LBP waste and debris, lead contaminated personal protective equipment (PPE), clothing and waste polyethylene and lead-contaminated waste and debris shall be containerized in DOT approved containers (i.e.. 55 gallon drums, roll-off, etc.). If the waste is placed in roll-off(s), the roll off shall be lined with a minimum of 2 layers of'6-il polyethylene prior to placing any waste in it and covered with a liquid tight cover. Each container shall be labeled to identify the type of waste as defined in 49 CFR Part 172, 6 NYCRR Part 371 and 6 NYCRR Part 360 and with the date lead contaminated wastes were first put into the container.

b. A representative sample of the container(s) of LBP wastes and lead-contaminated wastes and debris generated by the LBP activities shall be taken in accordance with SW-. 846, Chapter 9, Sampling Plan and analyzed in the laboratory for TCLP lead by EPA Methods 1311 (extraction) and 6010 (analysis). If the wastes are placed in roll-off(s), four (4) composite samples per roll-off shall be taken for analysis. If the wastes are placed in *55* gallon drums, one composite sample for every ten (10) drums of wastes shall be taken for analysis. The laboratory analyses results shall dictate the proper method of disposal of the waste. A copy of the results shall be attached to the waste characterization (waste profile) form.

c. A waste characterization (waste profile) form shall be completed for the LBP waste and lead-contaminated waste and debris, and lead contaminated personal protective equipment and clothing (if containerized separately) and the forms submitted to Owner's Consultant for approval The Owner shall sign the forms. The Contractor shall process the forms and forward to the disposal facility for approval. The approved waste profile forms from the disposal facility shall be submitted to the Owner and Engineer prior to shipment of the wastes off-site.

d. The applicable waste transportation and disposal documents (i.e., hazardous waste manifest, bill of lading, non-hazardous waste manifest, land disposal restriction notification, etc.) shall be obtained and completed. An example of the completed waste transportation and disposal documents shall be submitted to Owner's Consultant for approval prior to shipment of the waste off-site.

e. Pick-up of hazardous wastes shall be made as needed to ensure that containers do not remain on the work site longer than 90 calendar days from the date affixed to each container. The Owner will assign an area for interim storage of waste-containing containers.

f. Lead contaminated personal protective equipment/ clothing, lead contaminated polyethylene, filters and debris, which cannot be sampled, shall be handled, stored, transported, and disposed of in the same manner as the LBP wastes and lead-contaminated wastes and debris, based on the sampling, laboratory analyses results and SW-846, Chapter 9, Sampling Plan calculations performed on the LBP wastes and lead-contaminated wastes and debris.

g. The LBP and lead contaminated wastes/ debris shall be handled, stored, transported and disposed of in accordance with 40 CFR Parts 260 to 265, 6 NYCRR Par 370 to 373, 6 NYCRR Part 364 and 6 NYCRR Part 360, as applicable. Additionally, the disposal shall be based on the sampling, laboratory analysis results and SW-846, Chapter 9, Sampling Plan calculations. Land disposal restriction notification shall be as required by 40 CFR Part 268 and 6 NYCRR Part 376.

2. Wastewater and Decontamination Water

a. Lead contaminated wastewater and decontamination water generated from the LBP work procedures shall be stored in DOT approved 55 gallon drums. Each drum shall be labeled to identify the type of waste as defined by 49 CFR Part 172, 6 NYCRR Part 371 and 6 NYCRR Part 360 and with the date lead contaminated liquid was first put into the drum.

b. A representative sample from the drum(s) of liquid wastes shall be taken in accordance with SW-846, Chapter 9, Sampling Plan and analyzed in the laboratory for total lead and total cadmium by EPA Method 200.7/6010. One composite sample for every ten (10) drums of liquid wastes shall be taken for analysis. The laboratory analyses results shall dictate the proper method of disposal of the waste. A copy of the results shall be attached to the waste characterization (waste profile) form.

c. A waste characterization (waste profile) form shall be completed for the liquid wastes and other wastes being generated and submitted to Owner's Consultant for approval. The Owner shall sign the form(s). The Contractor shall process the form(s) and forward the forms to the disposal facility for approval. The approved waste profile form(s) from the disposal facility shall be submitted to the Owner and Engineer prior to shipment of the wastes off-site.

d. The applicable waste transportation and disposal documents (i.e., hazardous waste manifest, bill of lading, non-hazardous waste manifest, land disposal restriction notification, etc.) shall be obtained and completed. An example of the completed waste transportation and disposal documents shall be submitted to Owner's Consultant for approval prior to shipment of the waste off-site.

e. The lead contaminated wastewater and decontamination water shall be handled, stored, transported and disposed of in accordance with 40 CFR Parts 260 to 265, 6 NYCRR Part 370 to 373, 6 NYCRR Part 364 and 6 NYCRR Part 360 as applicable.

3. Waste Pick-Up and Disposal

a. Waste pick-up cannot be performed until all required submittals have been reviewed and approved by the Owner's Consultant. The Owner must be present at waste pick-up to sign the waste transportation documents and approve pick-up. No waste shall leave the site without approval and authorization by Owner.

b. Coordinate scheduling of waste pick-up and transportation with Owner's Consultant. Notify Engineer at least 48 hours ahead of when the waste pick-up will take place.

c. All wastes shall be properly disposed of off-site at an approved disposal facility. The wastes shall be transported by a transporter permitted to transport wastes per 6 NYCRR Part 364. The wastes shall be disposed of at a facility permitted to accept the waste being disposed of.

d. Submit copy of completed and signed transportation and disposal documents to Owner and Engineer at time of shipment and submit copy of document signed by the disposal facility.

e. Return or cause to be returned all waste manifests and bills of lading signed by the disposal facility within fifteen *(15)* days of removal from the project site.

f. Submit certification of destruction for all incinerated wastes and certificates of final treatment and/or final disposal, as applicable, for all wastes disposed of off-site.

g. All waste transportation and disposal must be conducted in accordance with all applicable State, Local and Federal regulations, all generator State regulations, all the State regulations where the wastes are transported through, and the disposal State regulations.

C. Payment for Disposal of Wastes

Payment for disposal of wastes will not be made until the following are received by the Owner:

1. A signed copy of the manifests
2. Bills of lading
3. Weight tickets, etc.
4. Certificate of final disposal, from the final treatment or disposal facility certifying the amount of lead containing wastes and debris delivered.

PART 4 – INSPECTION

4.1 SUMMARY OF INSPECTION

Limited lead-based paint inspection(s) were completed throughout specific Renovation Areas as detailed on written narratives provided by the Town of New Windsor to identify suspect lead-based paints and/or lead-containing hazards potentially affected by scheduled demolition/renovation activities included within the ***Town of New Windsor Caesars Lane WWTP Expansion Project: Phase 2*** as detailed within Section #1.2 of this specification.

The inspection was completed by **QuES&T** Niton-certified XRF Technician(s). Paint testing was completed on-site utilizing a Viken Pb200e XRF Spectrum Analyzer Serial in accordance with the EPA issued Performance Characteristics Sheet (PCS) and paint chip sampling. A summary of results above the EPA action level of 1.0 mg/sq. cm., has been included to aid prospective bidders.

The survey was completed in accordance with EPA, OSHA and/or HUD Guidelines for inspection of lead-based paint(s) and/or lead-containing material(s). Per these protocols, all suspect coated surfaces impacted by demolition/renovation activities were located and categorized by homogeneous painting histories and component types.

4.2 SUMMARY OF RESULTS ABOVE THE EPA ACTION LEVEL OF 1.0 mg/cm^2

The following is a detailed listing of identified Lead-based Paint(s) and/or Lead-containing Materials, above the EPA action level of 1.0 mg/sq. cm. The following listing should be utilized as a guide to specific work-related tasks and is not necessarily an Abatement Scope. Specified lead-safe work practices shall be performed in accordance with the stipulations defined within this specification as required by specific work-related tasks and in advance of disturbance(s) of the following Lead-based Paint(s) and/or Lead-containing Material(s), above the EPA action level of 1.0 mg/sq. cm:

TABLE I: IDENTIFIED LEAD-BASED PAINT
TOWN OF NEW WINDSOR
CAESARS LANE WWTP
EXPANSION PROJECT: PHASE 2

Location	LBP Component	Substrate	Color	LBP Condition
Dewatering Building				
Bypass Building	Steel Beams/Columns	Metal	Blue	Poor
Primary Tank #1, Primary Tank #3, & Trickling Filter #2	Outer Railing	Metal	Grey	Poor
Trickling Filter #1 & Trickling Filter #2	Catwalk Supports	Metal	Red	Poor
Trickling Filter #1 & Trickling Filter #2	Filter Motor	Metal	Blue	Poor

It should be noted that several components tested did in fact contain minimal lead-levels below the EPA threshold level of 1.0 mg/sq. cm for classification as Lead-Based Paint (LBP) and are considered lead-containing coatings by the OSHA Regulation, "Lead Exposure in Construction" (29 CFR 1926.62). OSHA does not recognize a minimum limit for lead concentrations in paint for the purposes of disturbance. Monitoring of workers performing demolition/cleaning/disturbance of painted surfaces shall be completed to document personnel occupational exposure. Items containing any amount of lead concentration are considered lead-containing coatings per 29 CFR 1926.62, OSHA Lead Exposure in Construction.

THIS PAGE LEFT BLANK INTENTIONALLY

END OF SECTION

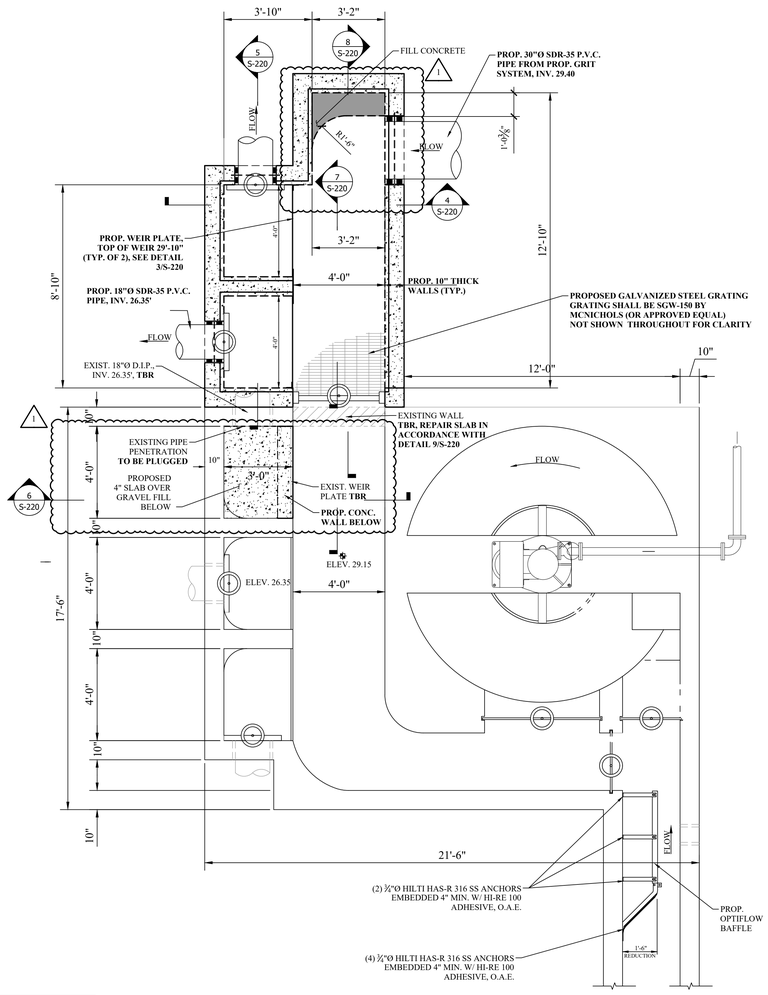

NOTE: PROVIDE SIKA SWELLSTOP SEALANT (O.A.E.) IN ALL JOINTS BETWEEN NEW AND EXISTING CONCRETE CHANNELS.

1 S-220 EXISTING GRIT CHAMBER AND SPLITTER BOX MODIFICATION PLAN
SCALE: 3/8" = 1'-0"

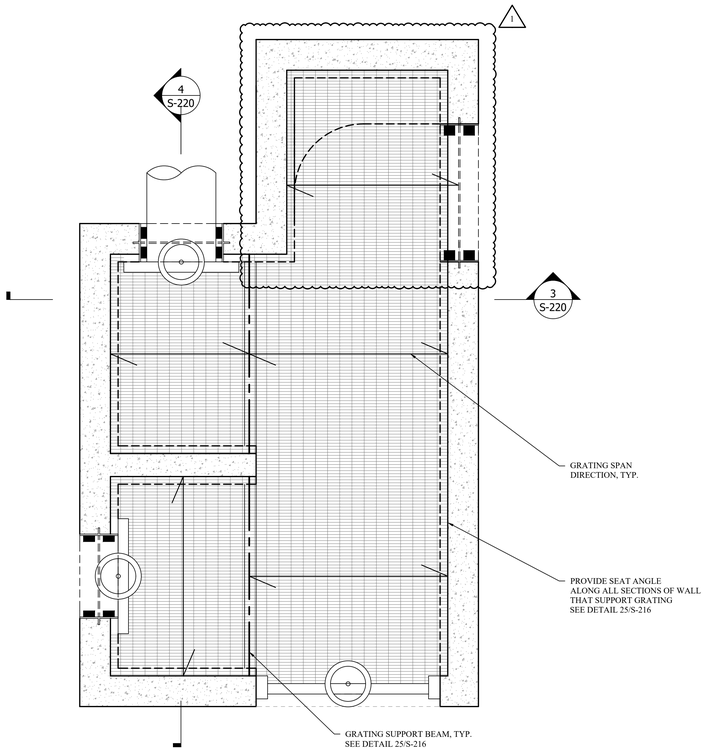

2 S-220 DISTRIBUTION BOX GRATING PLAN
SCALE: 3/4" = 1'-0"

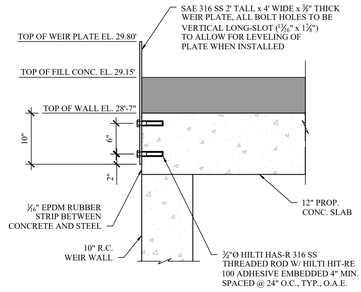

3 S-220 WEIR PLATE
SCALE: 1" = 1'-0"

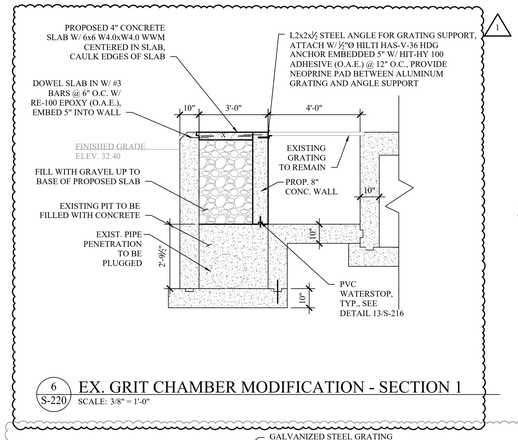

6 S-220 EX. GRIT CHAMBER MODIFICATION - SECTION 1
SCALE: 3/8" = 1'-0"

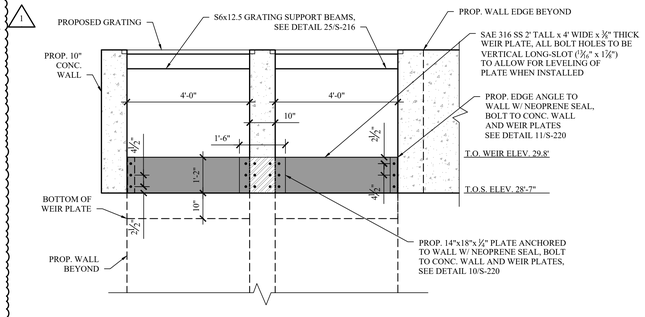

7 S-220 EX. GRIT CHAMBER MODIFICATION - SECTION 1
SCALE: 1/2" = 1'-0"

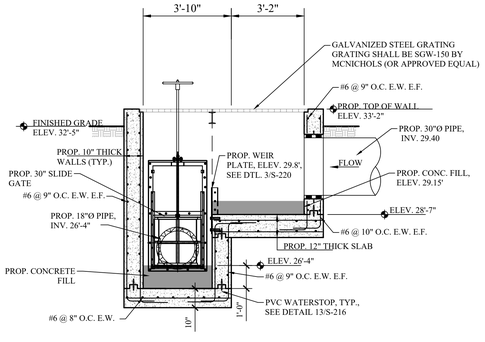

4 S-220 PROPOSED DISTRIBUTION BOX SECTION 3
SCALE: 3/8" = 1'-0"

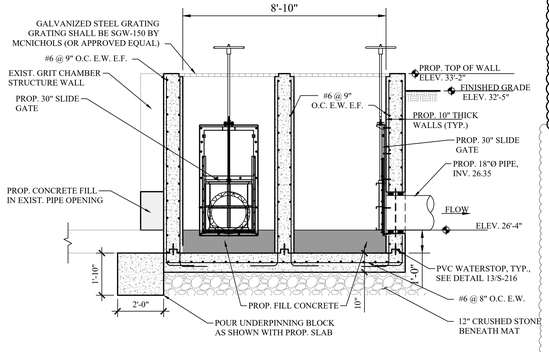

5 S-220 PROPOSED DISTRIBUTION BOX SECTION 4
SCALE: 3/8" = 1'-0"

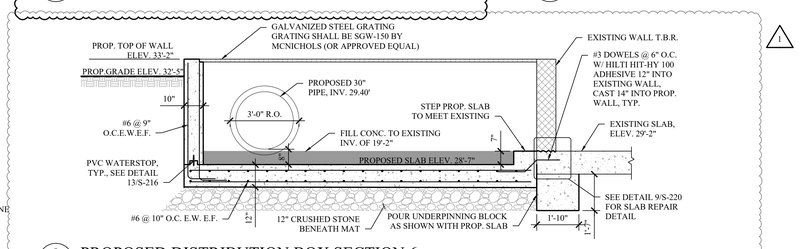

8 S-220 PROPOSED DISTRIBUTION BOX SECTION 6
SCALE: 3/8" = 1'-0"

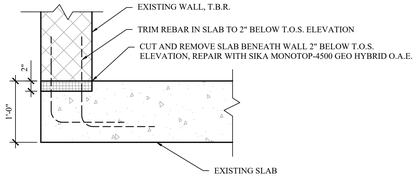

9 S-220 EXISTING DISTRIBUTION BOX SLAB REPAIR DETAIL
SCALE: 1" = 1'-0"

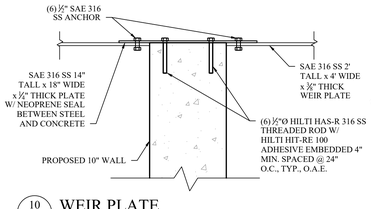

10 S-220 WEIR PLATE
SCALE: 1" = 1'-0"

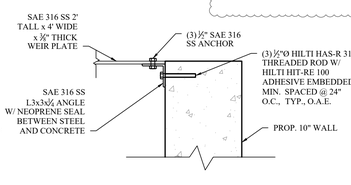

11 S-220 WEIR PLATE
SCALE: 1" = 1'-0"

MHE ENGINEERING
33 Airport Center Drive, Suite 202
New Windsor, NY 12553
(845) 567-3100
111 Wheatfield Drive, Suite 1
Milford, PA 18337
(570) 296-2765

BID SET

HAZARDOUS MATERIAL NOTE:
THE SERVICES PROVIDED BY MHE, INCLUDING ALL WORK DEPICTED ON MHE PLANS, DO NOT INCLUDE SERVICES RELATED TO THE IDENTIFICATION, CONTROLS OR HANDLING OF HAZARDOUS MATERIALS, INCLUDING SUCH MATERIALS AS ASBESTOS AND LEAD PAINT. ALL TESTING, IDENTIFICATION, ABATEMENT, CONTROLS, AND HANDLING OF HAZARDOUS MATERIALS SHALL BE UNDERTAKEN BY A HAZARDOUS MATERIAL CONSULTANT AND CERTIFIED PROFESSIONALS. IF SUCH MATERIALS HAVE BEEN IDENTIFIED, CONTRACTOR WILL COMMUNICATE DIRECTLY WITH HAZARDOUS MATERIAL PROFESSIONAL FOR THE PERFORMANCE OF ANY WORK ON OR ADJACENT TO SAID MATERIALS. IF UNIDENTIFIED MATERIALS OF CONCERN ARE ENCOUNTERED WHILE UNDERTAKING THE WORK SHOWN HEREON, CONTRACTOR SHALL IMMEDIATELY NOTIFY ENGINEER AND OWNER, AND SHALL OBTAIN DIRECTION FROM THE HAZARDOUS MATERIAL CONSULTANT PRIOR TO THE CONTINUATION OF WORK INVOLVING SUSPECTED MATERIAL.

UDIG·NY SAFE DIGGING STARTS HERE
CALL 811

UNAUTHORIZED ADDITION OR ALTERATION OF THIS PLAN IS A VIOLATION OF SECTION 7209(2) OF THE NEW YORK STATE EDUCATION LAW.

ALL PRODUCTION & INTELLECTUAL PROPERTY RIGHT RESERVED ©

CAESARS LANE WWTP EXPANSION PROJECT: PHASE 2
145 CAESARS LN.
NEW WINDSOR, NY 12553
FOR TOWN OF NEW WINDSOR
555 UNION AVE.
NEW WINDSOR, NY 12553

EXISTING GRIT CHAMBER AND DISTRIBUTION BOX MODIFICATION PLAN AND DETAILS

REVISIONS

NO.	DESCRIPTION	DATE
1	ADDENDUM 1	06/06/25

ISSUED DATE:	18 APR, 2025
DESIGN BY:	WPG, NEM, PJW
DRAWN BY:	WPG, NEM, PJW
CHECKED BY:	PJW
REVIEWED BY:	JSS

SHEET NO.
S-220

PROJECT # 18-732 PHASE #

P:\2018\18-732 Caesar Lane WWTP Improvements\Expansion Phase\Drafting\2 - Headworks, Screening, Grit Removal\3 STRUCTURAL\Addendum 1\Drawings\024 11.04 02 - Headworks Screening Grit Removal - Structural ADDENDUM 1.dwg, S-220, 6/3/2025 3:05:59 PM

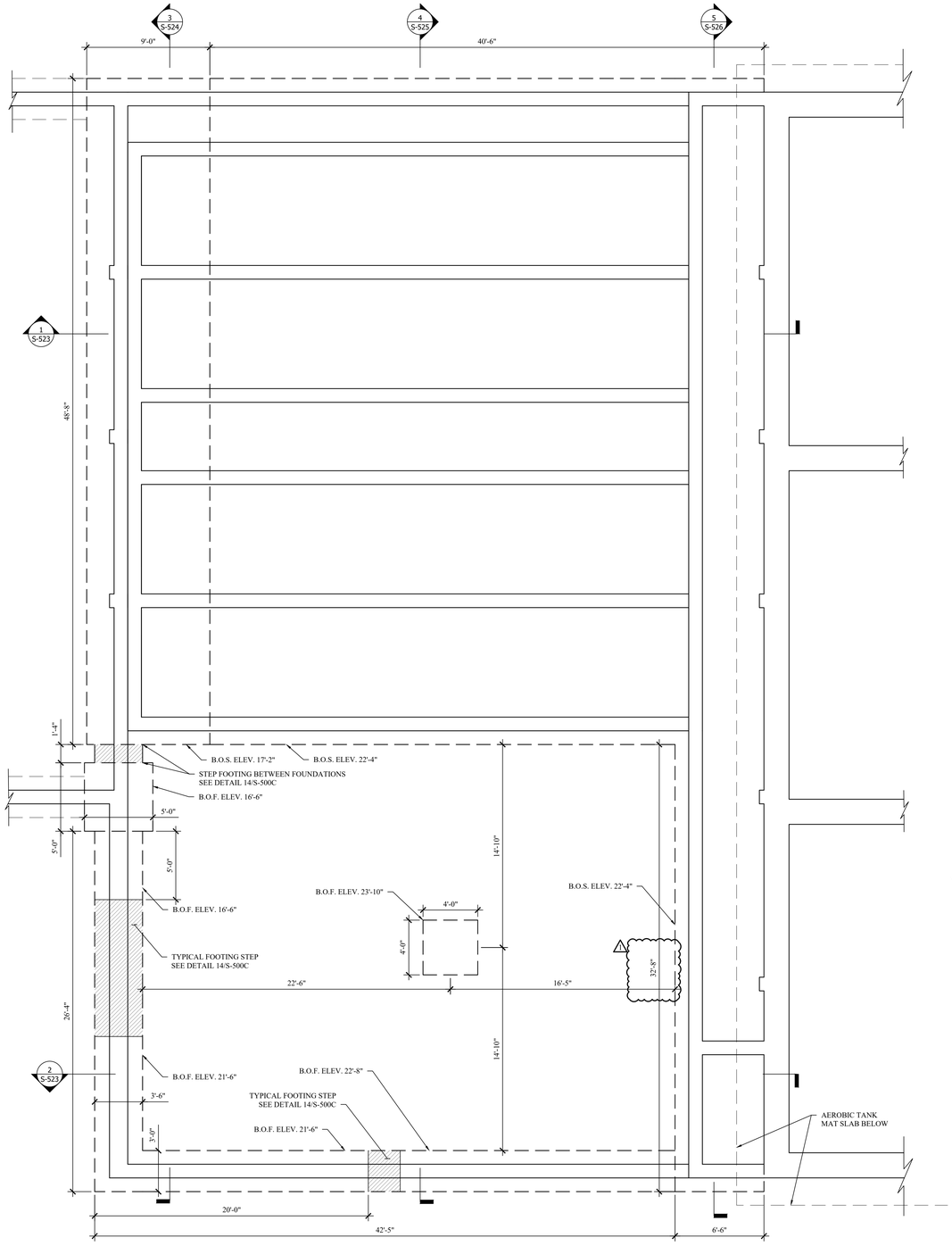

1 S-520 MBR BASIN FOUNDATION PLAN
SCALE: 1/4" = 1'-0"

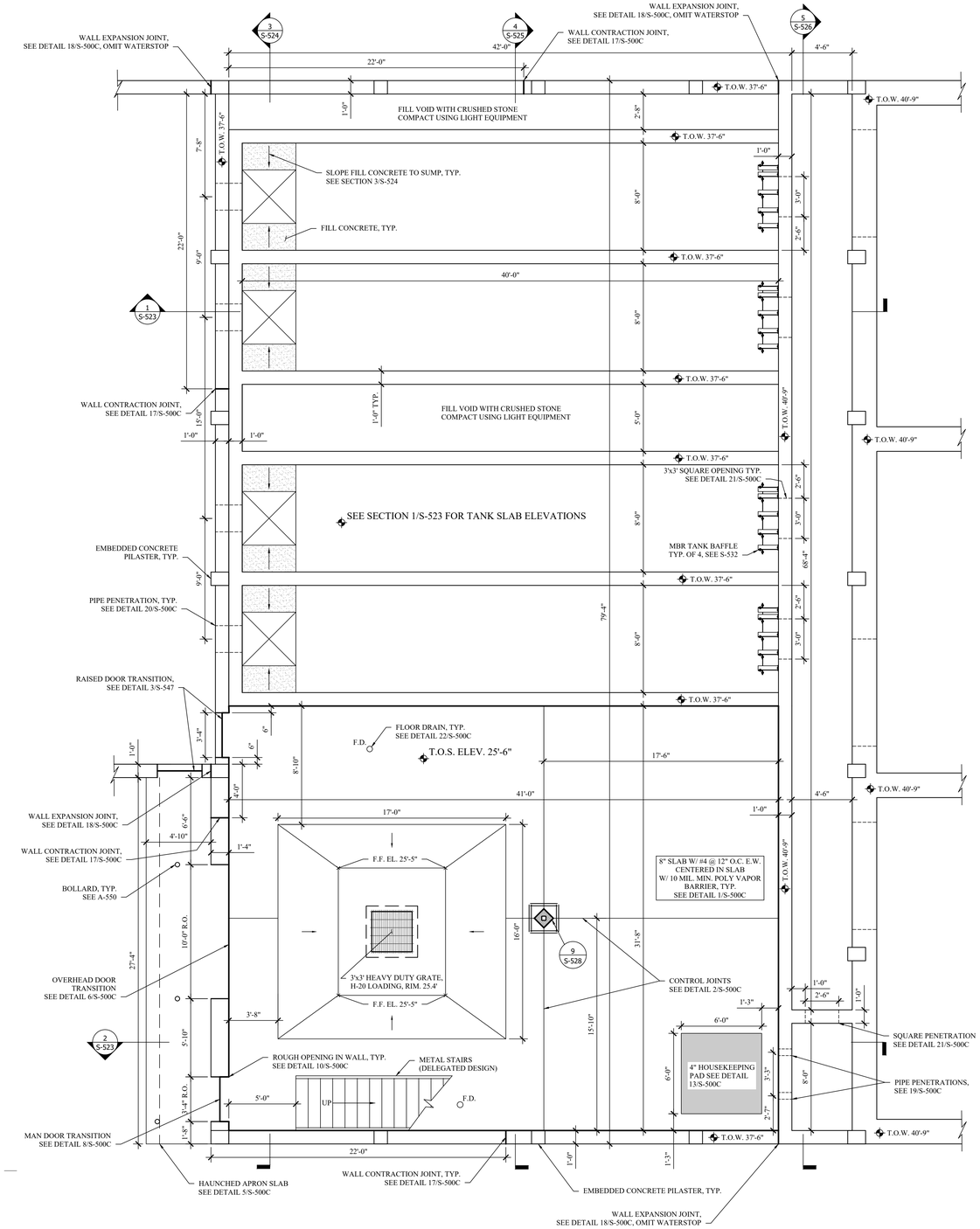

2 S-520 MBR BASIN SLAB AND WALL PLAN
SCALE: 1/4" = 1'-0"

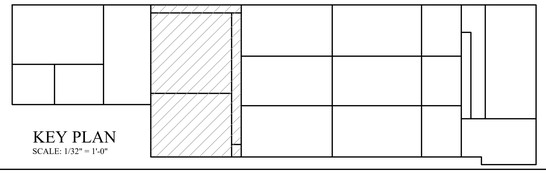

KEY PLAN
SCALE: 1/32" = 1'-0"

MHE ENGINEERING
33 Airport Center Drive, Suite 202
New Windsor, NY 12553
(845) 567-3100
111 Wheatfield Drive, Suite 1
Milford, PA 18337
(570) 296-2765

BID SET

HAZARDOUS MATERIAL NOTE:
THE SERVICES PROVIDED BY MHE, INCLUDING ALL WORK DEPICTED ON MHE PLANS, DO NOT INCLUDE SERVICES RELATED TO THE IDENTIFICATION, CONTROLS OR HANDLING OF HAZARDOUS MATERIALS, INCLUDING SUCH MATERIALS AS ASBESTOS AND LEAD PAINT. ALL TESTING, IDENTIFICATION, ABATEMENT, CONTROLS, AND HANDLING OF HAZARDOUS MATERIALS SHALL BE UNDERTAKEN BY A HAZARDOUS MATERIAL CONSULTANT AND CERTIFIED PROFESSIONALS. IF SUCH MATERIALS HAVE BEEN IDENTIFIED, CONTRACTOR WILL COMMUNICATE DIRECTLY WITH HAZARDOUS MATERIAL PROFESSIONAL FOR THE PERFORMANCE OF ANY WORK ON OR ADJACENT TO SAID MATERIALS. IF UNIDENTIFIED MATERIALS OF CONCERN ARE ENCOUNTERED WHILE UNDERTAKING THE WORK SHOWN HEREON, CONTRACTOR SHALL IMMEDIATELY NOTIFY ENGINEER AND OWNER, AND SHALL OBTAIN DIRECTION FROM THE HAZARDOUS MATERIAL CONSULTANT PRIOR TO THE CONTINUATION OF WORK INVOLVING SUSPECTED MATERIAL.

UDIG·NY
SAFE DIGGING STARTS HERE
CALL 811

UNAUTHORIZED ADDITION OR ALTERATION OF THIS PLAN IS A VIOLATION OF SECTION 7209(2) OF THE NEW YORK STATE EDUCATION LAW.

ALL PRODUCTION & INTELLECTUAL PROPERTY RIGHT RESERVED ©

CAESARS LANE WWTP
EXPANSION PROJECT:
PHASE 2
145 CAESARS LN.
NEW WINDSOR, NY 12553
FOR TOWN OF NEW WINDSOR
555 UNION AVE.
NEW WINDSOR, NY 12553

MBR BASIN PLANS

REVISIONS

NO.	DESCRIPTION	DATE
1	ADDENDUM 1	06/06/25

ISSUED DATE:	18 APR, 2025
DESIGN BY:	WPG, NEM, PJW
DRAWN BY:	WPG, NEM, PJW
CHECKED BY:	PJW
REVIEWED BY:	JSS

SHEET NO.
S-520

PROJECT # 18-732 PHASE #

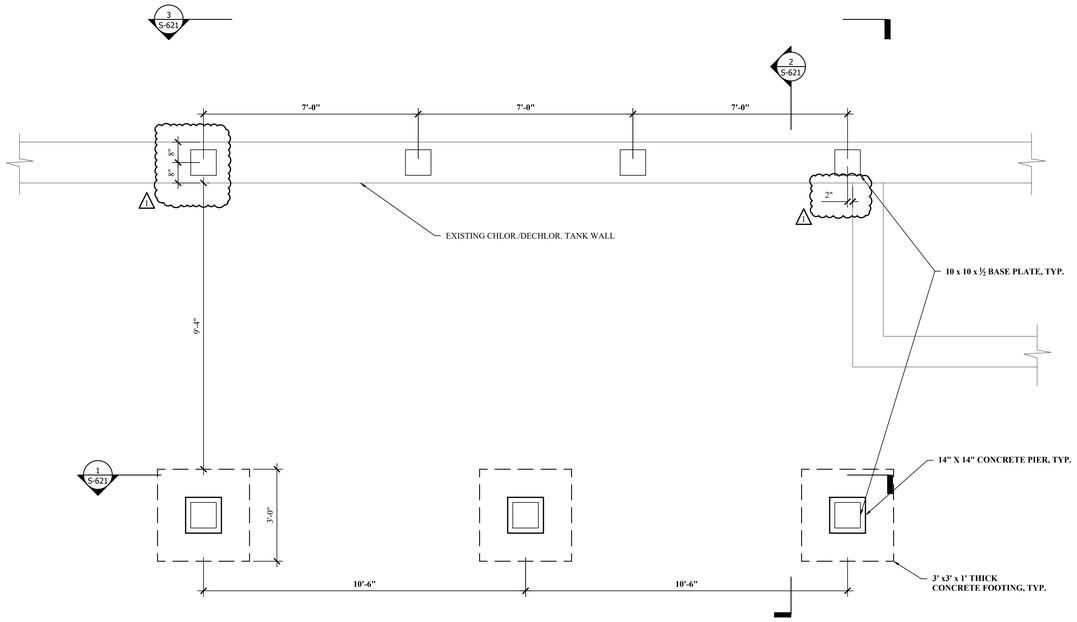

1 S-620 BLOWER PLATFORM FOUNDATION PLAN
SCALE: 1/2" = 1'-0"

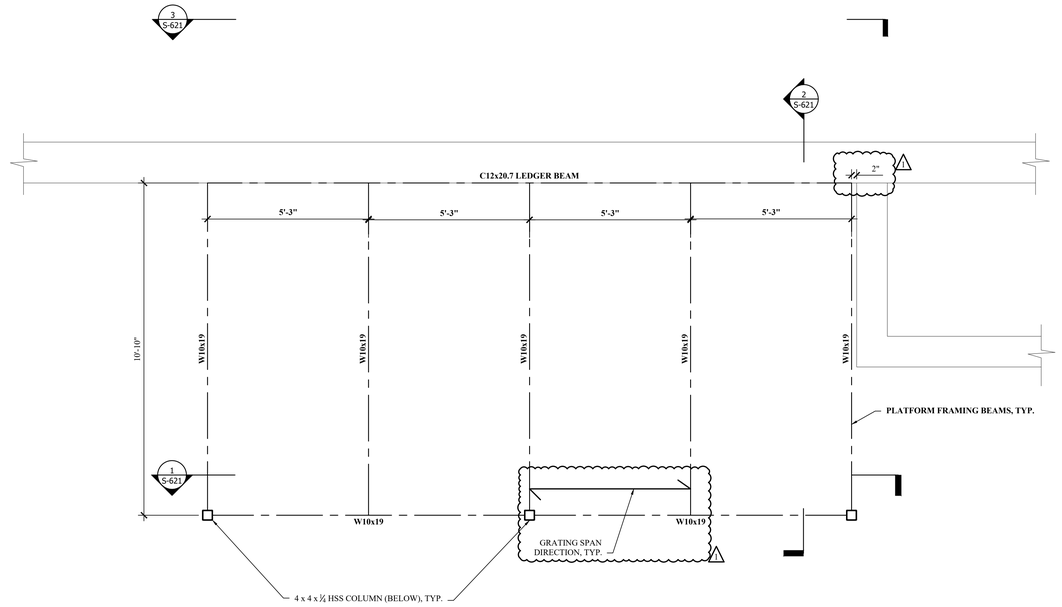

2 S-620 BLOWER PLATFORM FRAMING PLAN
SCALE: 1/2" = 1'-0"

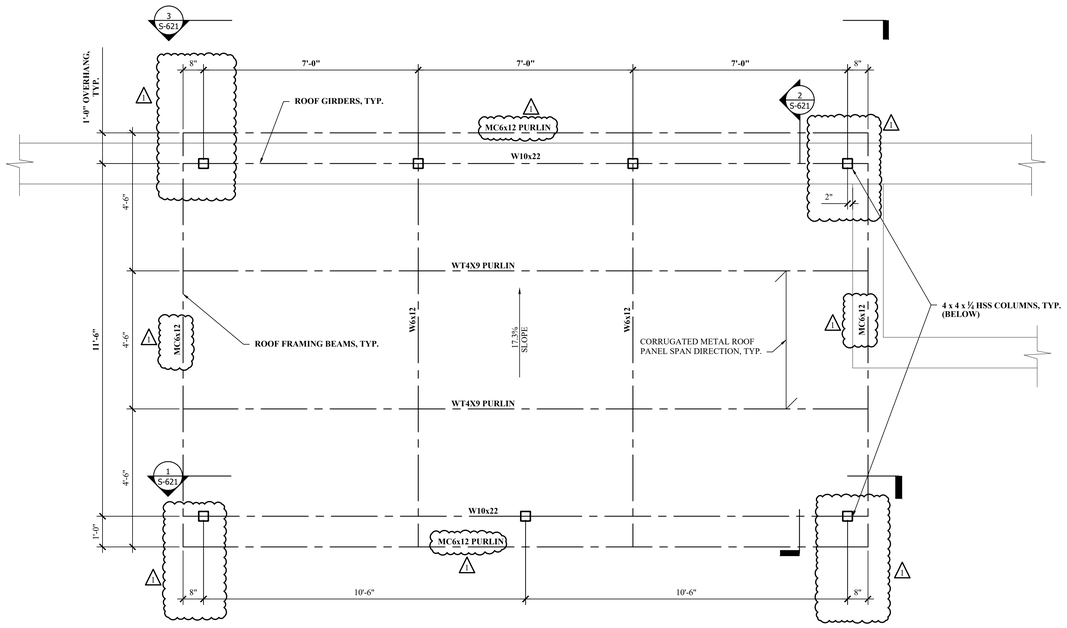

3 S-620 BLOWER PLATFORM ROOF FRAMING PLAN
SCALE: 1/2" = 1'-0"

MHE ENGINEERING
33 Airport Center Drive, Suite 202
New Windsor, NY 12553
(845) 567-3100
111 Wheatfield Drive, Suite 1
Milford, PA 18337
(570) 296-2765

BID SET

HAZARDOUS MATERIAL NOTE:
THE SERVICES PROVIDED BY MHE, INCLUDING ALL WORK DEPICTED ON MHE PLANS, DO NOT INCLUDE SERVICES RELATED TO THE IDENTIFICATION, CONTROLS OR HANDLING OF HAZARDOUS MATERIALS, INCLUDING SUCH MATERIALS AS ASBESTOS AND LEAD PAINT. ALL TESTING, IDENTIFICATION, ABATEMENT, CONTROLS, AND HANDLING OF HAZARDOUS MATERIALS SHALL BE UNDERTAKEN BY A HAZARDOUS MATERIAL CONSULTANT AND CERTIFIED PROFESSIONALS. IF SUCH MATERIALS HAVE BEEN IDENTIFIED, CONTRACTOR WILL COMMUNICATE DIRECTLY WITH HAZARDOUS MATERIAL PROFESSIONAL FOR THE PERFORMANCE OF ANY WORK ON OR ADJACENT TO SAID MATERIALS. IF UNIDENTIFIED MATERIALS OF CONCERN ARE ENCOUNTERED WHILE UNDERTAKING THE WORK SHOWN HEREON, CONTRACTOR SHALL IMMEDIATELY NOTIFY ENGINEER AND OWNER, AND SHALL OBTAIN DIRECTION FROM THE HAZARDOUS MATERIAL CONSULTANT PRIOR TO THE CONTINUATION OF WORK INVOLVING SUSPECTED MATERIAL.

UDIG·NY
SAFE DIGGING STARTS HERE
CALL 811

UNAUTHORIZED ADDITION OR ALTERATION OF THIS PLAN IS A VIOLATION OF SECTION 7209(2) OF THE NEW YORK STATE EDUCATION LAW.

ALL PRODUCTION & INTELLECTUAL PROPERTY RIGHT RESERVED ©

CAESARS LANE WWTP
EXPANSION PROJECT:
PHASE 2
145 CAESARS LN.
NEW WINDSOR, NY 12553
FOR TOWN OF NEW WINDSOR
555 UNION AVE.
NEW WINDSOR, NY 12553

CHLORINATION/
DECHLORINATION
TANK BLOWER
PLATFORM PLANS

REVISIONS

NO.	DESCRIPTION	DATE
1	ADDENDUM 1	06/06/25

ISSUED DATE:	18 APR, 2025
DESIGN BY:	WPG, NEM, PJW
DRAWN BY:	WPG, NEM, PJW
CHECKED BY:	PJW
REVIEWED BY:	JSS

SHEET NO.
S-620

PROJECT # 18-732 PHASE #

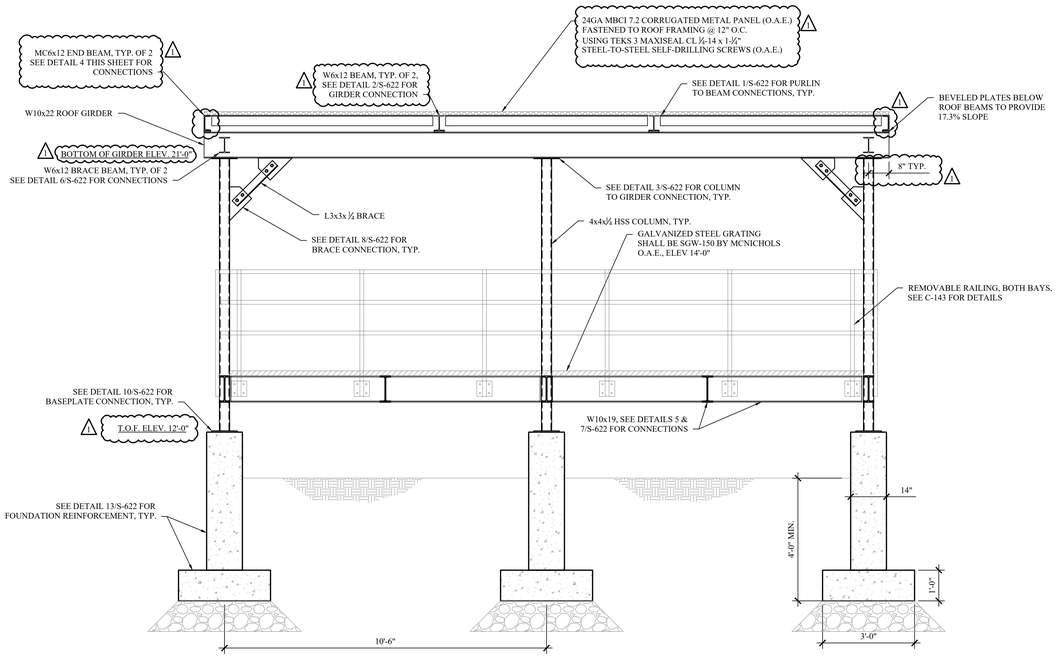

1 S-621 BLOWER PLATFORM SECTION 1
SCALE: 1/2" = 1'-0"

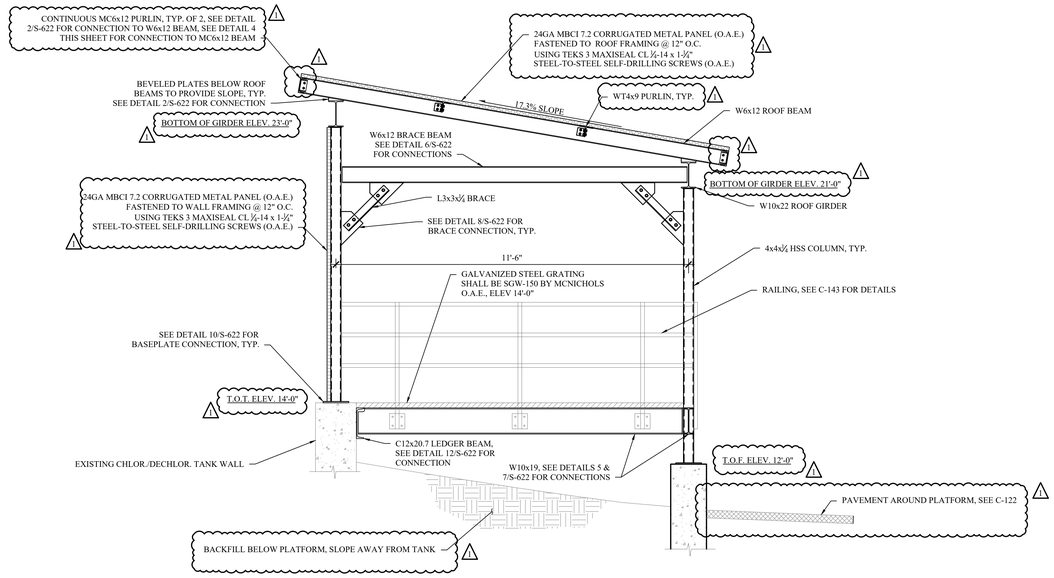

2 S-621 BLOWER PLATFORM SECTION 2
SCALE: 1/2" = 1'-0"

NOTE: INSTALLATION OF METAL ROOFING SHALL INCLUDE STANDARD APPURTENANCES INCLUDING BUT NOT LIMITED TO EVE AND RAKE DRIP EDGE FLASHING

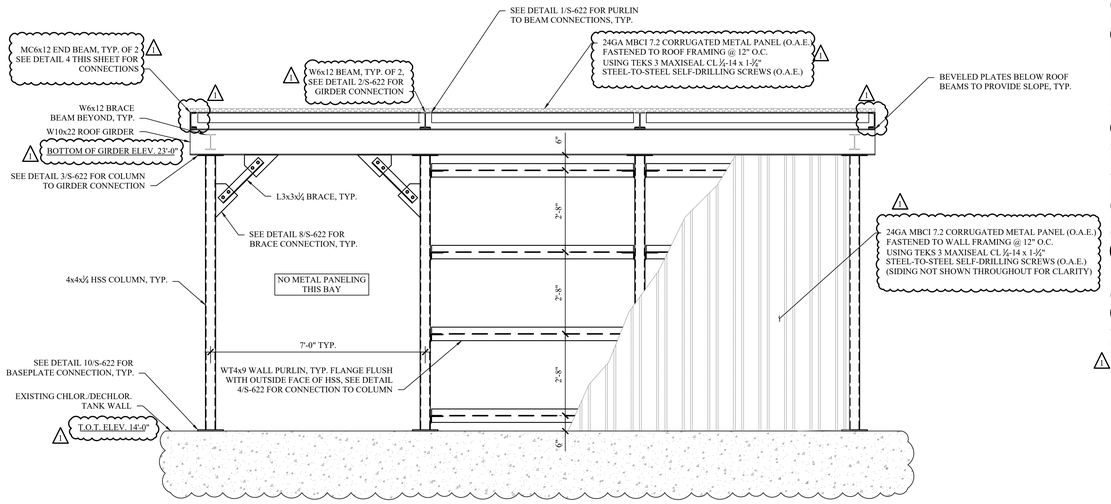

3 S-621 BLOWER PLATFORM SECTION 3
SCALE: 1/2" = 1'-0"

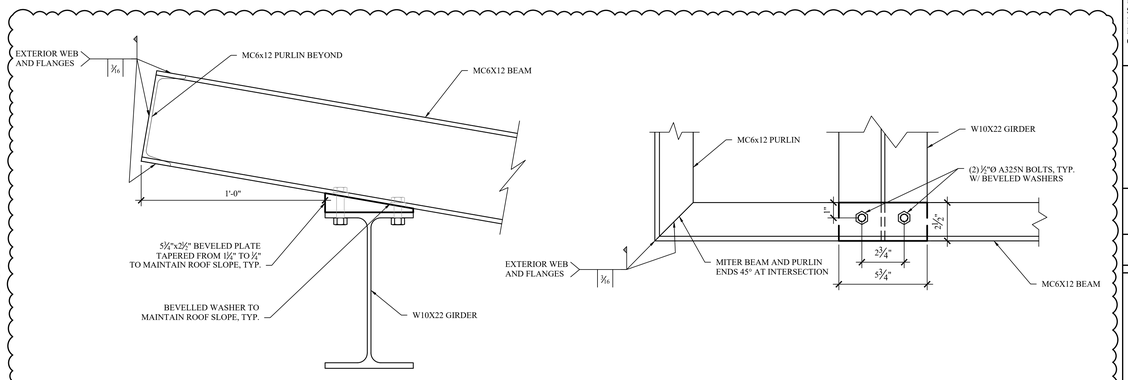

4 S-621 MC6x12 END BEAM CONNECTIONS
SCALE: 3" = 1'-0"

MHE ENGINEERING
33 Airport Center Drive, Suite 202
New Windsor, NY 12553
(845) 567-3100
111 Wheatfield Drive, Suite 1
Milford, PA 18337
(570) 296-2765

BID SET

HAZARDOUS MATERIAL NOTE:
THE SERVICES PROVIDED BY MHE, INCLUDING ALL WORK DEPICTED ON MHE PLANS, DO NOT INCLUDE SERVICES RELATED TO THE IDENTIFICATION, CONTROLS OR HANDLING OF HAZARDOUS MATERIALS, INCLUDING SUCH MATERIALS AS ASBESTOS AND LEAD PAINT. ALL TESTING, IDENTIFICATION, ABATEMENT, CONTROLS, AND HANDLING OF HAZARDOUS MATERIALS SHALL BE UNDERTAKEN BY A HAZARDOUS MATERIAL CONSULTANT AND CERTIFIED PROFESSIONALS. IF SUCH MATERIALS HAVE BEEN IDENTIFIED, CONTRACTOR WILL COMMUNICATE DIRECTLY WITH HAZARDOUS MATERIAL PROFESSIONAL FOR THE PERFORMANCE OF ANY WORK ON OR ADJACENT TO SAID MATERIALS. IF UNIDENTIFIED MATERIALS OF CONCERN ARE ENCOUNTERED WHILE UNDERTAKING THE WORK SHOWN HEREON, CONTRACTOR SHALL IMMEDIATELY NOTIFY ENGINEER AND OWNER, AND SHALL OBTAIN DIRECTION FROM THE HAZARDOUS MATERIAL CONSULTANT PRIOR TO THE CONTINUATION OF WORK INVOLVING SUSPECTED MATERIAL.

UDIG·NY SAFE DIGGING STARTS HERE
CALL 811

UNAUTHORIZED ADDITION OR ALTERATION OF THIS PLAN IS A VIOLATION OF SECTION 7209(2) OF THE NEW YORK STATE EDUCATION LAW.

ALL PRODUCTION & INTELLECTUAL PROPERTY RIGHT RESERVED ©

CAESARS LANE WWTP EXPANSION PROJECT: PHASE 2
145 CAESARS LN.
NEW WINDSOR, NY 12553
FOR TOWN OF NEW WINDSOR
555 UNION AVE.
NEW WINDSOR, NY 12553

CHLORINATION/ DECHLORINATION TANK BLOWER PLATFORM SECTIONS

REVISIONS

NO.	DESCRIPTION	DATE
1	ADDENDUM 1	06/06/25

ISSUED DATE:	18 APR, 2025
DESIGN BY:	WPG, NEM, PJW
DRAWN BY:	WPG, NEM, PJW
CHECKED BY:	PJW
REVIEWED BY:	JSS

SHEET NO.
S-621

PROJECT # 18-732 PHASE #

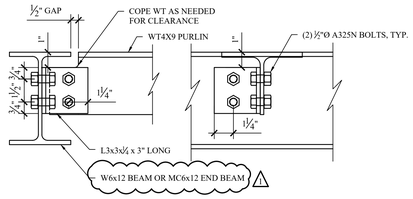

1 S-622 ROOF BEAM TO ROOF PURLIN CONNECTION
SCALE: 3" = 1'-0"

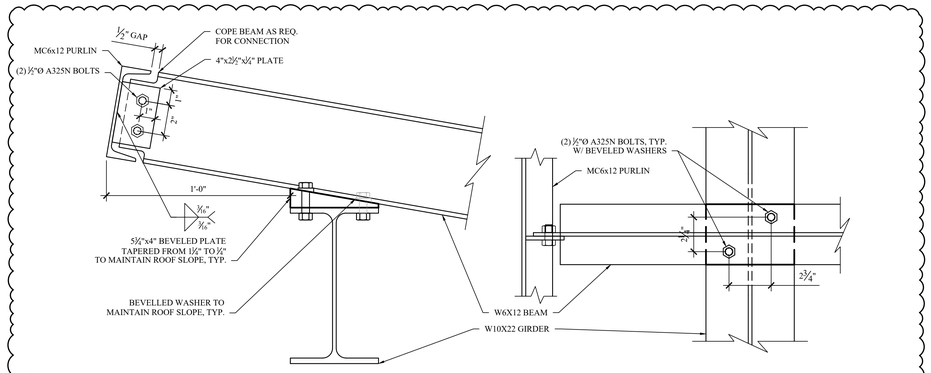

2 S-622 W6x12 ROOF BEAM TO ROOF GIRDER AND MC6x12 PURLIN CONNECTION
SCALE: 3" = 1'-0"

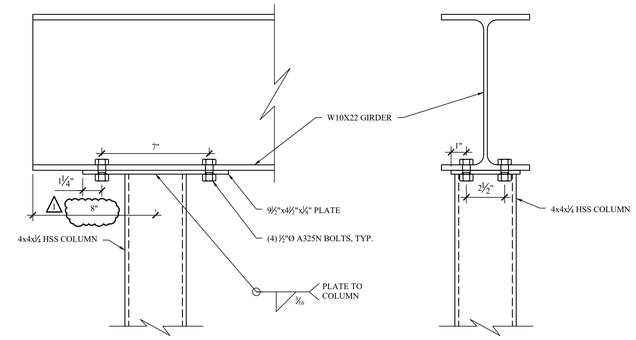

3 S-622 ROOF GIRDER TO COLUMN CONNECTION
SCALE: 3" = 1'-0"

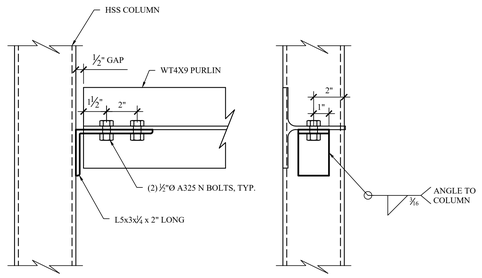

4 S-622 COLUMN TO WALL PURLIN CONNECTION
SCALE: 3" = 1'-0"

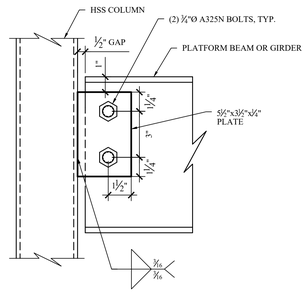

5 S-622 TYPICAL UNCOPED SHEAR PLATE
SCALE: 3" = 1'-0"

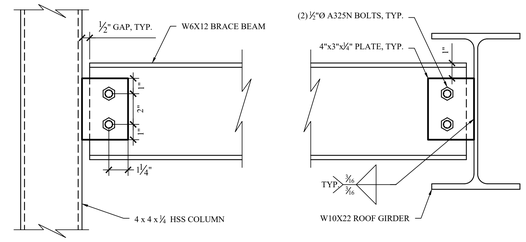

6 S-622 BRACE BEAM CONNECTIONS
SCALE: 3" = 1'-0"

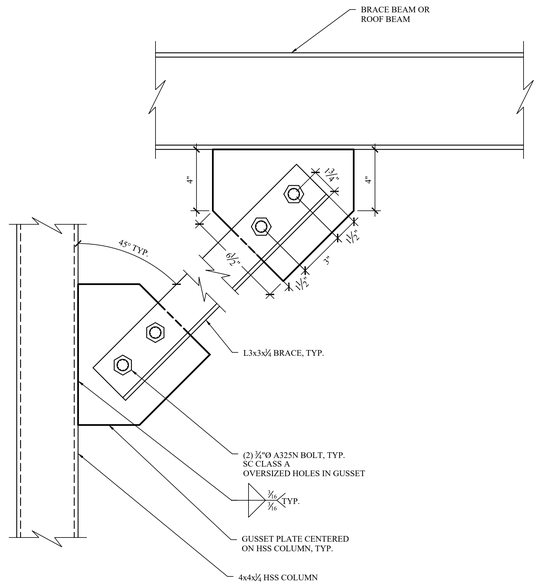

8 S-622 ANGLE BRACING CONNECTIONS
SCALE: 3" = 1'-0"

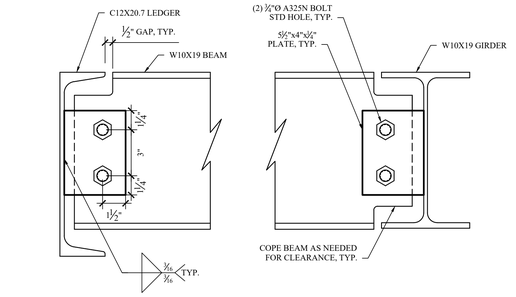

7 S-622 TYPICAL COPED SHEAR PLATE
SCALE: 3" = 1'-0"

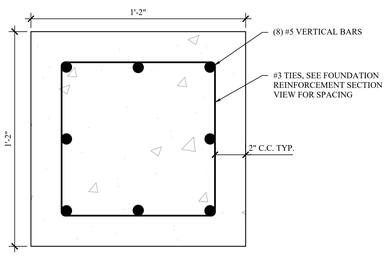

9 S-622 PIER REINFORCEMENT PLAN
SCALE: 3" = 1'-0"

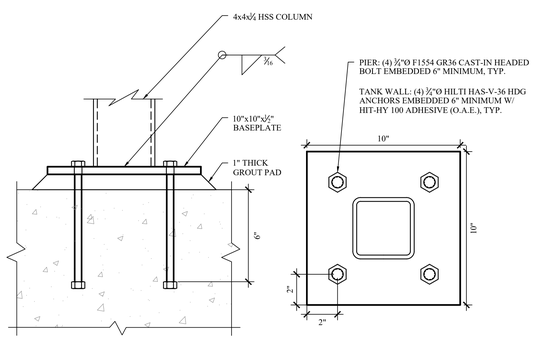

10 S-622 COLUMN BASEPLATE
SCALE: 3" = 1'-0"

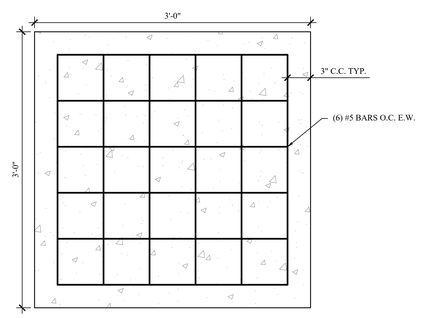

11 S-622 FOUNDATION REINFORCEMENT PLAN
SCALE: 1-1/2" = 1'-0"

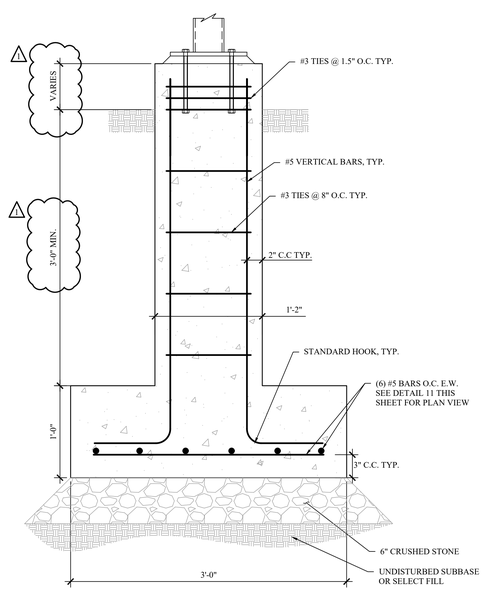

13 S-622 FOUNDATION REINFORCEMENT SECTION
SCALE: 1-1/2" = 1'-0"

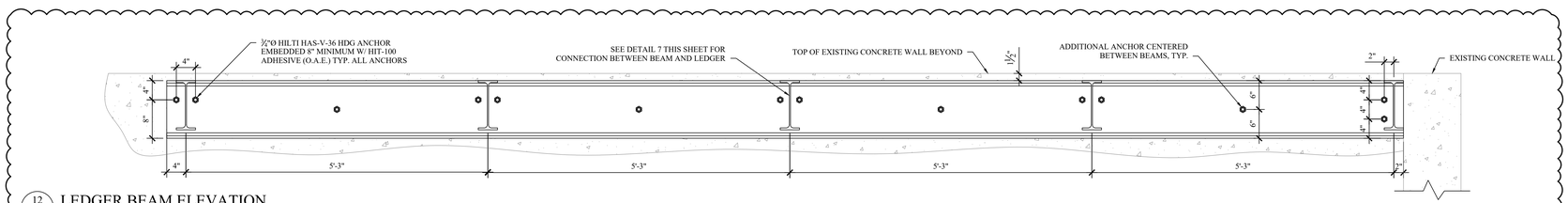

12 S-622 LEDGER BEAM ELEVATION
SCALE: 1" = 1'-0"

MHE ENGINEERING
33 Airport Center Drive, Suite 202
New Windsor, NY 12553
(845) 567-3100
111 Wheatfield Drive, Suite 1
Milford, PA 18337
(570) 296-2765

BID SET

HAZARDOUS MATERIAL NOTE:
THE SERVICES PROVIDED BY MHE, INCLUDING ALL WORK DEPICTED ON MHE PLANS, DO NOT INCLUDE SERVICES RELATED TO THE IDENTIFICATION, CONTROLS OR HANDLING OF HAZARDOUS MATERIALS, INCLUDING SUCH MATERIALS AS ASBESTOS AND LEAD PAINT. ALL TESTING, IDENTIFICATION, ABATEMENT, CONTROLS, AND HANDLING OF HAZARDOUS MATERIALS SHALL BE UNDERTAKEN BY A HAZARDOUS MATERIAL CONSULTANT AND CERTIFIED PROFESSIONALS. IF SUCH MATERIALS HAVE BEEN IDENTIFIED, CONTRACTOR WILL COMMUNICATE DIRECTLY WITH HAZARDOUS MATERIAL PROFESSIONAL FOR THE PERFORMANCE OF ANY WORK ON OR ADJACENT TO SAID MATERIALS. IF UNIDENTIFIED MATERIALS OF CONCERN ARE ENCOUNTERED WHILE UNDERTAKING THE WORK SHOWN HEREON, CONTRACTOR SHALL IMMEDIATELY NOTIFY ENGINEER AND OWNER, AND SHALL OBTAIN DIRECTION FROM THE HAZARDOUS MATERIAL CONSULTANT PRIOR TO THE CONTINUATION OF WORK INVOLVING SUSPECTED MATERIAL.

UDIG·NY SAFE DIGGING STARTS HERE
CALL 811

UNAUTHORIZED ADDITION OR ALTERATION OF THIS PLAN IS A VIOLATION OF SECTION 7209(2) OF THE NEW YORK STATE EDUCATION LAW.

ALL PRODUCTION & INTELLECTUAL PROPERTY RIGHT RESERVED ©

CAESARS LANE WWTP EXPANSION PROJECT: PHASE 2
145 CAESARS LN.
NEW WINDSOR, NY 12553
FOR TOWN OF NEW WINDSOR
555 UNION AVE.
NEW WINDSOR, NY 12553

CHLORINATION/ DECHLORINATION TANK BLOWER PLATFORM DETAILS

REVISIONS

NO.	DESCRIPTION	DATE
1	ADDENDUM 1	06/06/25

ISSUED DATE:	18 APR, 2025
DESIGN BY:	WPG, NEM, PJW
DRAWN BY:	WPG, NEM, PJW
CHECKED BY:	PJW
REVIEWED BY:	JSS

SHEET NO.
S-622

PROJECT # 18-732 PHASE #